1. MATERIAL: 4340 STEEL SAE-AMS-6415S
2. 64 Ra ALL OVER UNLESS OTHERWISE SPECIFIED.
3. HEAT TREAT: Rc 35-45 BEFORE FINISH MACHINING.
4. BREAK ALL EDGES .01-.02 UNLESS OTHERWISE SPECIFIED.
5. UNLESS OTHERWISE SPECIFIED ALL FACES AND DIAMETERS SHALL BE .002 A B
6. MATCH MACHINE (GRIND) THICKNESS WITH PART NUMBER 060928MRA521. PART THICKNESS TO BE WITHIN 0.0003 TO EACH OTHER.
7. BLACK OXIDE PER MIL-DTL-13924, CLASS 1.
8. ELECTROCHEMICAL ETCH DRAWING PART NUMBER 060928MRA520 ON SPECIFIED SURFACE, PER SAE-AS478, METHOD 7A, OR, LASER ETCH DRAWING PART NUMBER 060928MRA520 ON SPECIFIED SURFACE, PER SAE-AS478, METHOD 15B1. (SHALLOW ENGRAVE 0.0001-0.0006 DEEP). (ZONE E6)
9. BEFORE SHIPPING, PROTECT WITH CONTAMINATION BARRIER SUCH AS WD-40 OR EQUIVALENT. USE NEW AND CLEAN POLYETHYLENE BAG FOR SMALL ITEMS, OR, 4 MIL THICK MINIMUM POLYETHYLENE SHEET SEALED WITH PACKAGING TAPE. MARK WITH DRAWING PART NUMBER 060928MRA520 ON TAG ATTACHED TO BAG.
10. TO BE BALANCED DYNAMICALLY BY NASA. SEE NASA DRAWING NUMBER 060928MRA508 FOR BALANCE REQUIREMENTS.

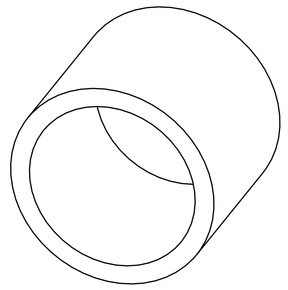

ISO VIEW
SCALE 2/1

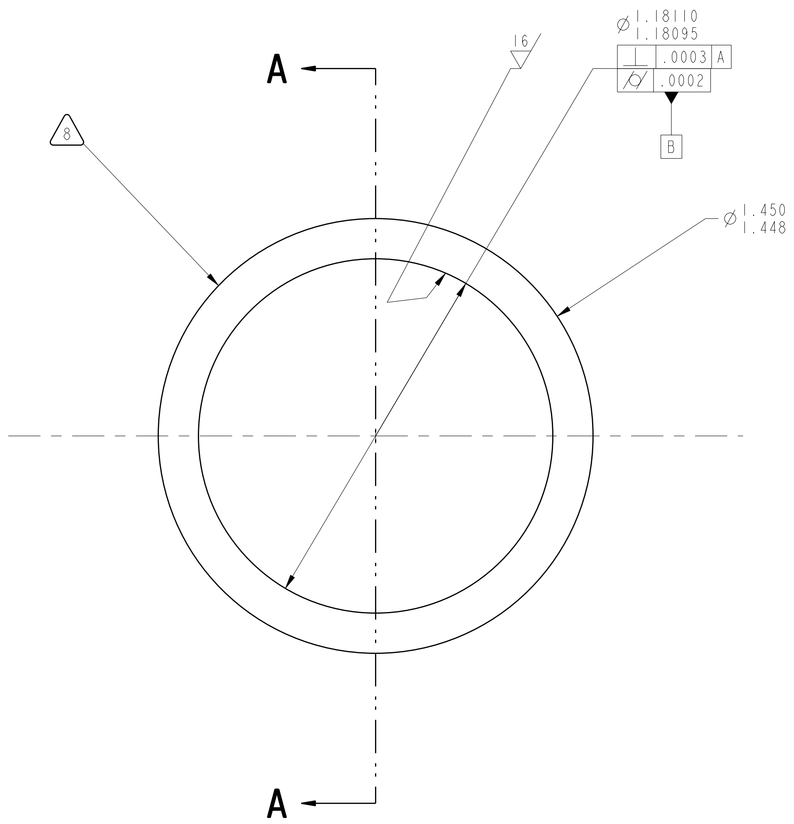

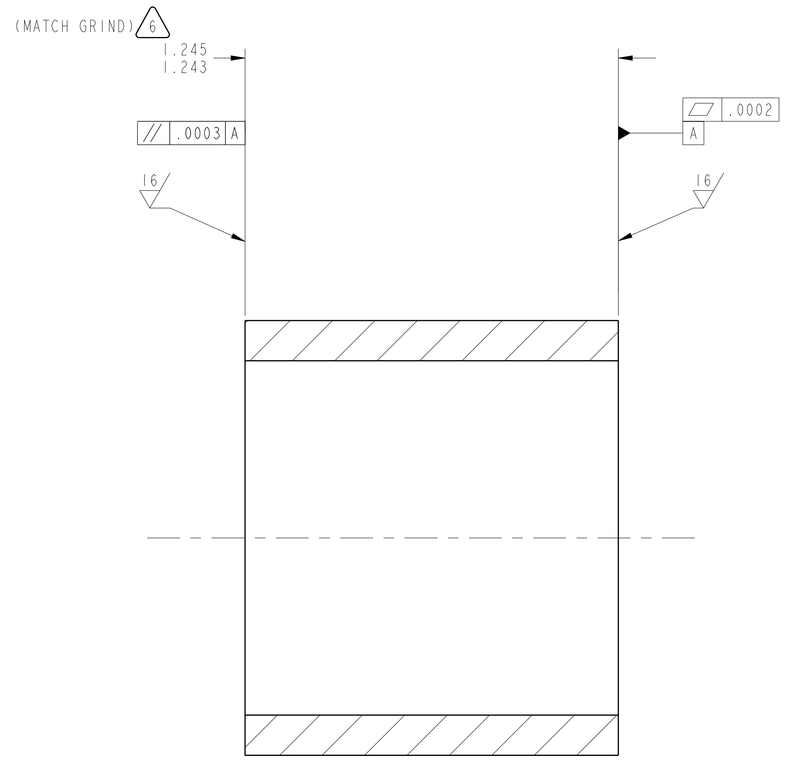

SECTION A-A

REVISION HISTORY		
ZONE	REV	DESCRIPTION

		UNLESS OTHERWISE SPECIFIED DIMENSIONS ARE IN INCHES X.X ± .03 X.XXX ± .005 X.XX ± .01 ANGLE ± .5° MACHINED SURFACES 63/.03 INTERPRET DIMENSIONS AND TOLERANCES PER ASME Y14.5M - 1994	DATE	2011/05/17
			MODELER	DEZ / R. DETAMORE
			PRIMARY CONTACT	DER / M. STEVENS
			STATE	Released
		THIRD ANGLE PROJECTION	WINDCHILL PRODUCT	060928_Variable_Speed_Transmissio
060928MRA508	2-SPEED TRANS		MODEL	A520_SPACER_FWD_BRNGS_INNER
NEXT ASSY	USED ON			
APPLICATION				

NATIONAL AERONAUTICS AND SPACE ADMINISTRATION
JOHN H. GLENN RESEARCH CENTER
LEWIS FIELD, CLEVELAND, OHIO

TITLE
SPACER, FORWARD-BEARINGS, INNER

SIZE	CAGE CODE	DWG NO	REV
E	1QFP5	060928MRA520	-

SCALE: 4/1 SHEET 1 OF 1

DWG NO 060928MRA520 SH 1 REV -

NAME:DETAMOR OBJECT:A520_SPACER_FWD_BRNGS_INNER DATE:17-May-11 15:57:42