1. MATERIAL: 4340 STEEL PER SAE-AMS-6415S.
2. HEAT TREAT: Rc 35-45 BEFORE FINISH MACHINING.
3. 64 Ra ALL OVER UNLESS OTHERWISE NOTED.
4. BREAK ALL EDGES .01-.02 UNLESS OTHERWISE NOTED.
5. UNLESS OTHERWISE NOTED, ALL FACES AND DIAMETERS SHALL BE ⌀ .002 A B
6. BLACK OXIDE PER MIL-DTL-13924D, CLASS 1.
7. IDENTIFY BY TAGGING WITH DRAWING PART NUMBER 060928MRA519, PER SAE-AS478, METHOD 35D.
8. BEFORE SHIPPING, PROTECT WITH CONTAMINATION BARRIER SUCH AS WD-40, OR EQUIVALENT. USE NEW AND CLEAN POLYETHYLENE BAG FOR SMALL ITEMS, OR 4 MIL THICK MINIMUM POLYETHYLENE SHEET SEALED WITH PACKAGING TAPE. MARK WITH DRAWING PART NUMBER 060928MRA519, ON TAG ATTACHED TO BAG.
9. TO BE BALANCED DYNAMICALLY BY NASA. SEE ASSEMBLY DRAWING NUMBER 060928MRA508, FOR BALANCE REQUIREMENTS.

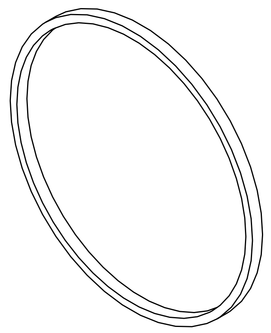

ISO VIEW
SCALE: 1/1

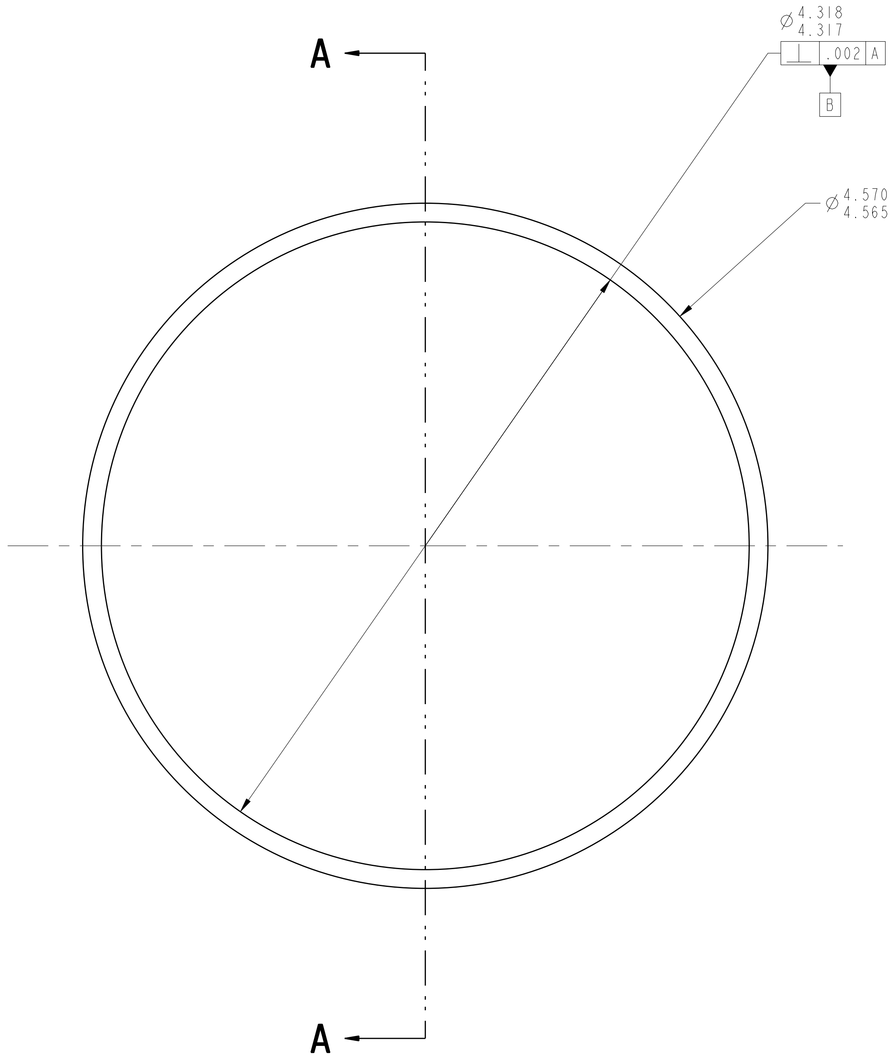

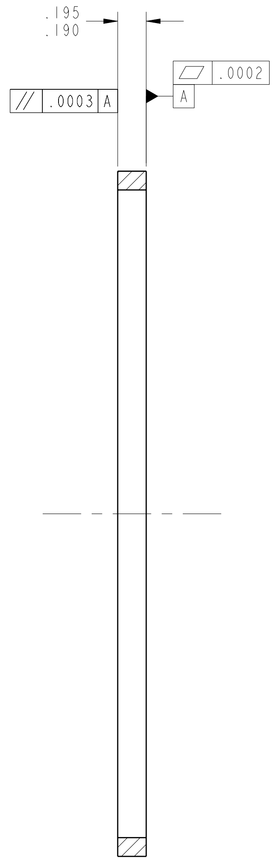

SECTION A-A

REVISION HISTORY		
ZONE	REV	DESCRIPTION

		UNLESS OTHERWISE SPECIFIED DIMENSIONS ARE IN INCHES X.X ± .03 X.XXX ± .005 X.XX ± .01 ANGLE ± .5° MACHINED SURFACES 63/.03 INTERPRET DIMENSIONS AND TOLERANCES PER ASME Y14.5M - 1994	DATE	2011/05/17
			MODELER	DEZ / D. MIKITKA
			PRIMARY CONTACT	DER / M. STEVENS
			STATE	Released
		THIRD ANGLE PROJECTION	WINDCHILL PRODUCT	060928_Variable_Speed_Transmissio
060928MRA508	2-SPEED TRANS		MODEL	A519_SPACER_RETAINNUT
NEXT ASSY	USED ON			
APPLICATION				

NATIONAL AERONAUTICS AND SPACE ADMINISTRATION
JOHN H. GLENN RESEARCH CENTER
LEWIS FIELD, CLEVELAND, OHIO

TITLE
SPACER, RETAINER-NUT

SIZE	CAGE CODE	DWG NO	REV
E	10FP5	060928MRA519	-

SCALE: 2/1 SHEET 1 OF 1

DWG NO 060928MRA519 SH 1 REV -

NAME:RDETAMOR OBJECT:A519_SPACER_RETAINNUT DATE:17-May-11 5:59:09