1. MATERIAL: 4340 STEEL PER SAE-AMS-6415S.
2. HEAT TREAT: Rc 35-45 BEFORE FINISH MACHINING.
3. 64 Ra ALL OVER UNLESS OTHERWISE NOTED.
4. BREAK ALL EDGES .01-.02 UNLESS OTHERWISE NOTED.
5. UNLESS OTHERWISE NOTED, ALL FACES AND DIAMETERS SHALL BE .002 A B
6. MATCH MACHINE (GRIND) THICKNESS WITH PART NUMBER 060928MRA516. PART THICKNESS TO BE WITHIN 0.0003 TO EACH OTHER.
7. BLACK OXIDE PER MIL-DTL-13924D, CLASS 1.
8. ELECTROCHEMICAL ETCH DRAWING PART NUMBER 060928MRA518I, ON SPECIFIED SURFACE, PER SAE-AS478, METHOD 7A, OR LASER ETCH DRAWING PART NUMBER 060928MRA518, ON SPECIFIED SURFACE, PER SAE-AS478, METHOD 15B1. (SHALLOW ENGRAVE 0.0001-0.0006 DEEP). (ZONE E7)
9. BEFORE SHIPPING, PROTECT WITH CONTAMINATION BARRIER SUCH AS WD-40, OR EQUIVALENT. USE NEW AND CLEAN POLYETHYLENE BAG FOR SMALL ITEMS, OR 4 MIL THICK MINIMUM POLYETHYLENE SHEET SEALED WITH PACKAGING TAPE. MARK WITH DRAWING PART NUMBER 060928MRA518, ON TAG ATTACHED TO BAG.
10. TO BE BALANCED DYNAMICALLY BY NASA. SEE ASSMEBLY DRAWING NUMBER 060928MRA508, FOR BALANCE REQUIREMENTS.

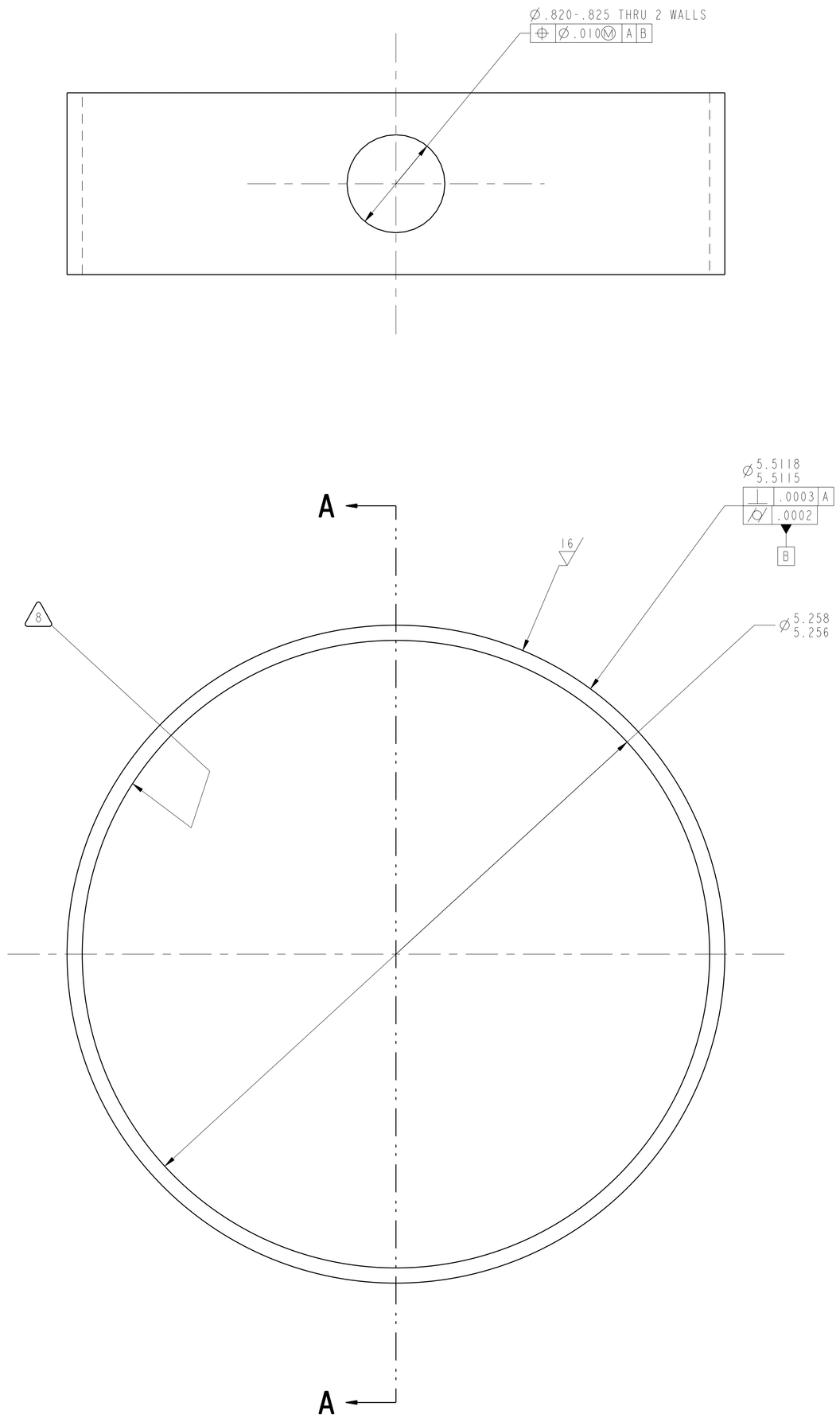

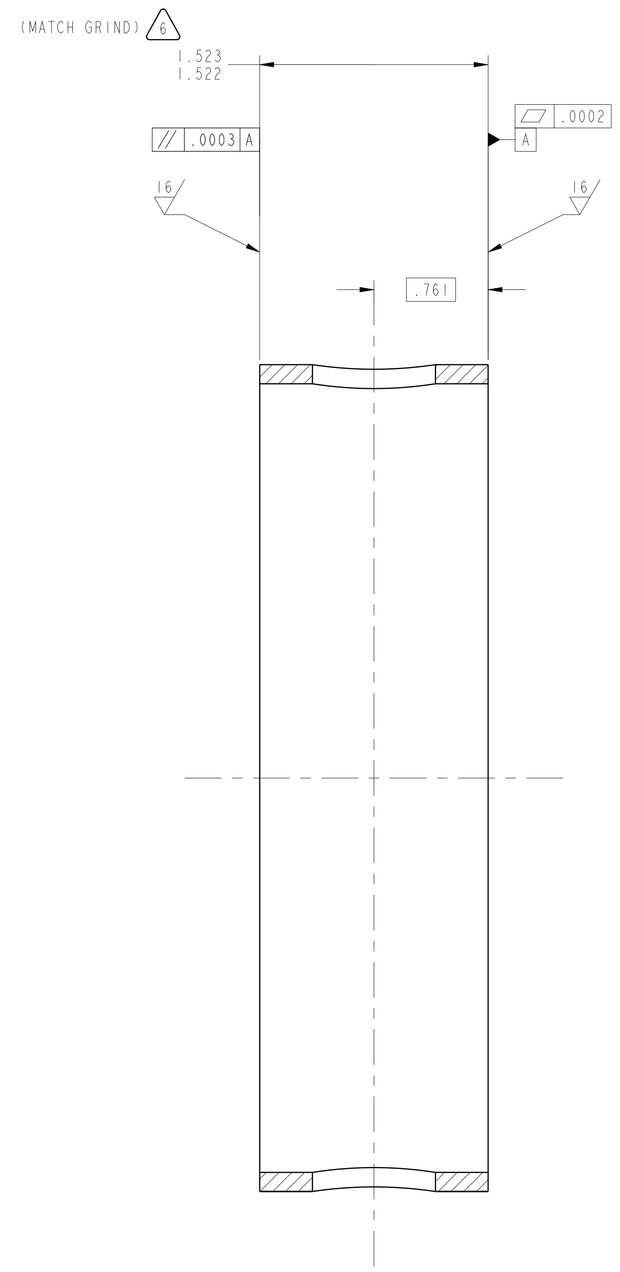

SECTION A-A

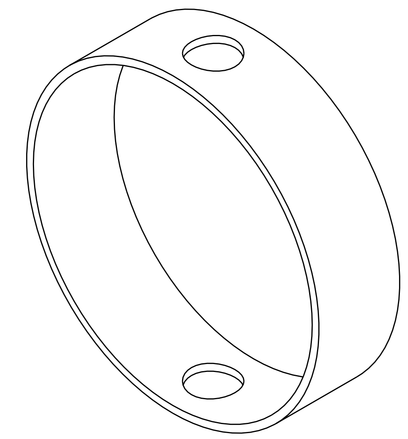

ISO VIEW
SCALE: 1/1

REVISION HISTORY		
ZONE	REV	DESCRIPTION

060928MRA508	2-SPEED TRANS	UNLESS OTHERWISE SPECIFIED DIMENSIONS ARE IN INCHES X.X ± .03 X.XXX ± .005 X.XX ± .01 ANGLE ± .5° MACHINED SURFACES 63/.03 INTERPRET DIMENSIONS AND TOLERANCES PER ASME Y14.5M - 1994	DATE 2011/05/17	NATIONAL AERONAUTICS AND SPACE ADMINISTRATION JOHN H. GLENN RESEARCH CENTER LEWIS FIELD, CLEVELAND, OHIO
NEXT ASSY	USED ON	THIRD ANGLE PROJECTION	MODELER DEZ/ D. MIKITKA	TITLE SPACER, OCG-BEARINGS, OUTER
APPLICATION			PRIMARY CONTACT DER / M. STEVENS	SIZE E CAGE CODE 1QFP5 DWG NO 060928MRA518 REV -
			STATE Released	SCALE: 2/1 SHEET 1 OF 1
			WINDCHILL PRODUCT 060928_Variable_Speed_Transmissio	
			MODEL A518_SPACER_OCG-BRNGS_OUTER	

DWG NO 060928MRA518 SH 1 REV -

NAME:DEZ/AMOR OBJECT:A518_SPACER_OCG-BRNGS_OUTER DATE:11-May-11 15:58:54