1. MATERIAL: 4340 STEEL PER SAE-AMS-6415S.
2. HEAT TREAT: Rc 35-45 BEFORE FINISH MACHINING.
3. 64 Ra ALL OVER UNLESS OTHERWISE NOTED.
4. BREAK ALL EDGES .01-.02 UNLESS OTHERWISE NOTED.
5. UNLESS OTHERWISE NOTED, ALL FACES AND DIAMETERS SHALL BE .002 A B
6. MATCH MACHINE (GRIND) THICKNESS WITH PART NUMBER 060928MRA518. PART THICKNESS TO BE WITHIN 0.0003 TO EACH OTHER.
7. BLACK OXIDE PER MIL-DTL-13924D, CLASS 1.
8. ELECTROCHEMICAL ETCH DRAWING PART NUMBER 060928MRA516, ON SPECIFIED SURFACE, PER SAE-AS478, METHOD 7A, OR LASER ETCH DRAWING PART NUMBER 060928MRA516, ON SPECIFIED SURFACE, PER SAE-AS478, METHOD 15B1. (SHALLOW ENGRAVE 0.0001-0.0006 DEEP). (ZONE E7)
9. BEFORE SHIPPING, PROTECT WITH CONTAMINATION BARRIER SUCH AS WD-40, OR EQUIVALENT. USE NEW AND CLEAN POLYETHYLENE BAG FOR SMALL ITEMS, OR 4 MIL THICK MINIMUM POLYETHYLENE SHEET SEALED WITH PACKAGING TAPE. MARK WITH DRAWING PART NUMBER 060928MRA516, ON TAG ATTACHED TO BAG.
10. TO BE BALANCED DYNAMICALLY BY NASA. SEE ASSEMBLY DRAWING NUMBER 060928MRA508, FOR BALANCE REQUIREMENTS.

REVISION HISTORY		
ZONE	REV	DESCRIPTION

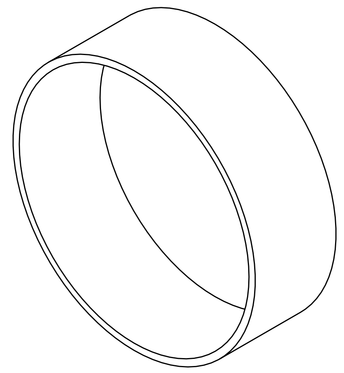

ISO VIEW
SCALE: 1/1

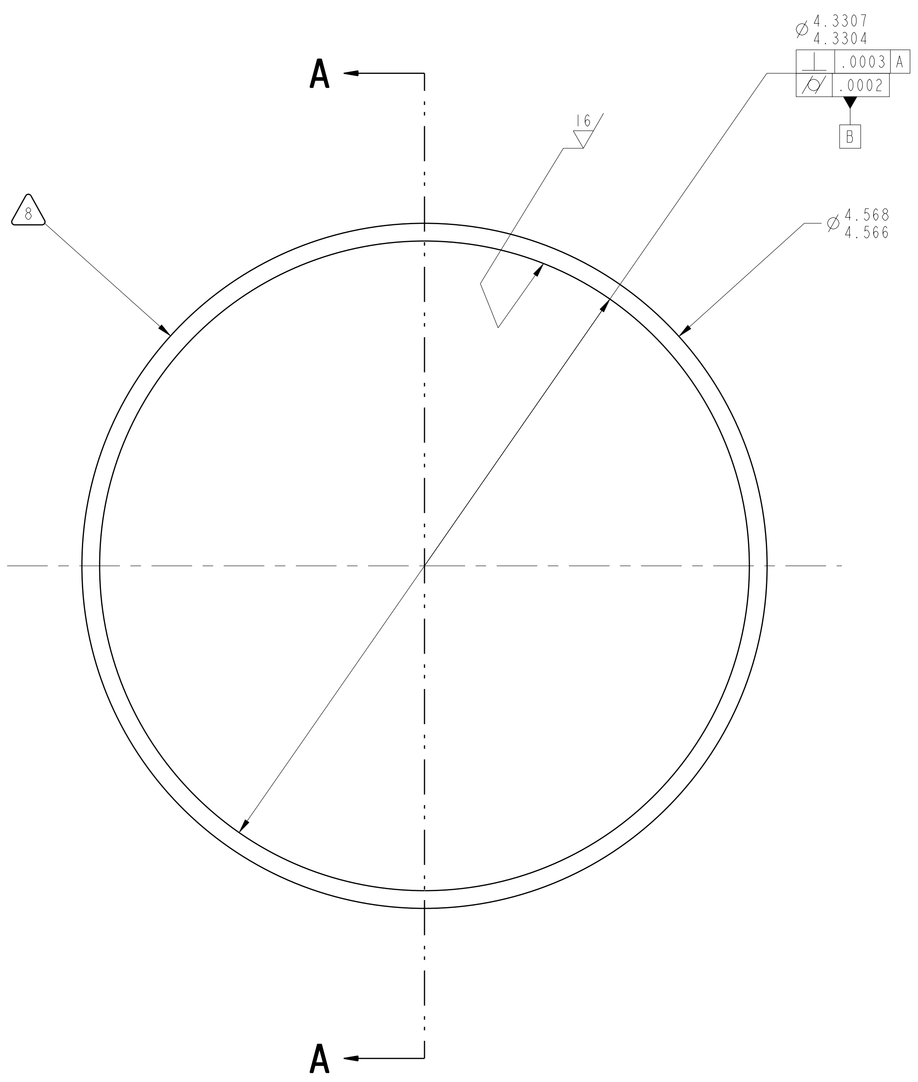

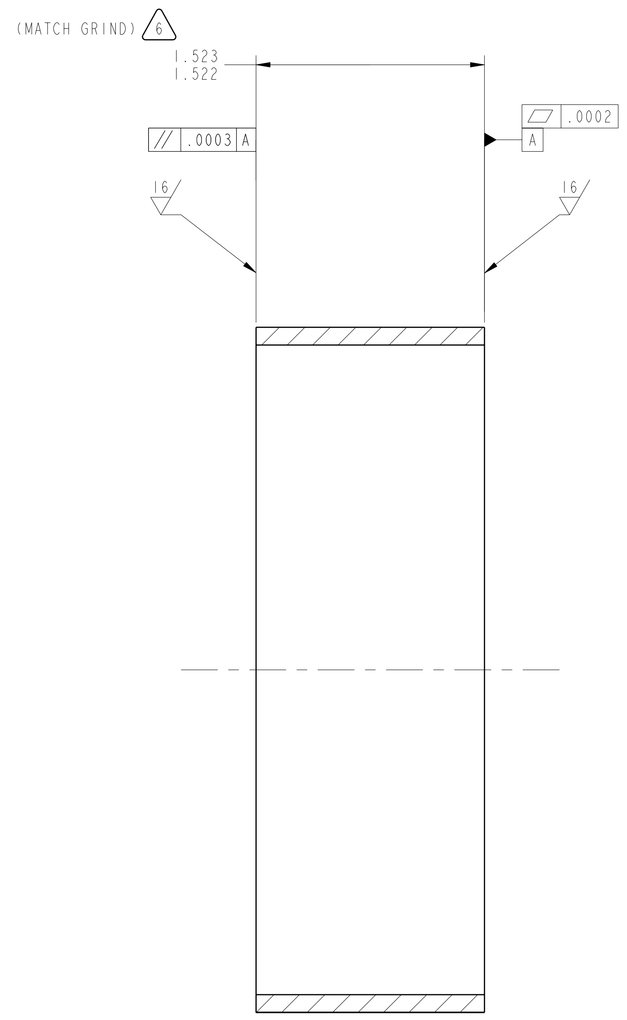

SECTION A-A

		UNLESS OTHERWISE SPECIFIED DIMENSIONS ARE IN INCHES X.X ± .03 X.XXX ± .005 X.XX ± .01 ANGLE ± .5° MACHINED SURFACES 63 / 63 INTERPRET DIMENSIONS AND TOLERANCES PER ASME Y14.5M - 1994 THIRD ANGLE PROJECTION	DATE 2011/05/17	NATIONAL AERONAUTICS AND SPACE ADMINISTRATION JOHN H. GLENN RESEARCH CENTER LEWIS FIELD, CLEVELAND, OHIO
			MODELER DEZ / D. MIKITKA	
			PRIMARY CONTACT DER / M. STEVENS	TITLE SPACER, OCG, BEARINGS, INNER
			STATE Released	
060928MRA508	2-SPEED TRANS		WINDCHILL PRODUCT 060928_Variable_Speed_Transmissio	SIZE E CAGE CODE 10FP5 DWG NO 060928MRA516 REV -
NEXT ASSY	USED ON		MODEL A516_SPACER_OCG-BRNGS_INNER	SCALE: 2/1 SHEET 1 OF 1
APPLICATION				

DWG NO 060928MRA516 SH 1 REV -

NAME:NDETAMOR OBJECT:A516_SPACER_OCG-BRNGS_INNER DATE:17May-11 15:58:20