NOTICE - WHEN GOVERNMENT DRAWINGS, SPECIFICATIONS, OR OTHER DATA ARE USED FOR ANY PURPOSE OTHER THAN IN CONNECTION WITH A DEFINITELY RELATED GOVERNMENT PROCUREMENT OPERATION, THE UNITED STATES GOVERNMENT THEREBY INCURS NO RESPONSIBILITY NOR ANY OBLIGATION WHATSOEVER; AND THE FACT THAT THE GOVERNMENT MAY HAVE FORMULATED, FURNISHED, OR IN ANY WAY SUPPLIED THE SAID DRAWINGS, SPECIFICATIONS, OR OTHER DATA IS NOT TO BE REGARDED BY IMPLICATION OR OTHERWISE AS IN ANY MANNER LICENSING THE HOLDER OR ANY OTHER PERSON OR CORPORATION, OR CONVEYING ANY RIGHTS OR PERMISSION TO MANUFACTURE, USE, OR SELL ANY PATENTED INVENTION THAT MAY IN ANY WAY BE RELATED THERETO.

APPLICATION	
NEXT ASSY	USED ON

REVISION HISTORY

PART NO.	ZONE	REV	DESCRIPTION	DATE	APPROVAL

EAR 99 -- NO LICENSE REQUIRED

The information contained in the document is technical in content, but not technical data as defined by the International Traffic in Arms Regulations (ITAR) or the Export Administration Regulations (EAR), and therefore is EAR 99 NLR, no export license required. [General Prohibition Six (Embargo) applies to all items subject to the EAR, (i.e., items on the CCL and within EAR 99 NLR). You may not make an export or re-export contrary to the provisions of part 746 (Embargos and Other Special Controls) of the EAR and 22 CFR part 126.1 of the ITAR].

Reference EDDR 114106

NASA KSC Export Control Office (321-867-9209)

UNLESS OTHERWISE SPECIFIED
DIMENSIONS ARE IN INCHES.
INTERPRET DIMENSIONS AND
TOLERANCES PER ASME Y14.5M-1994.
TOLERANCES NO:

FRACTIONS DECIMALS ANGLES

THIRD ANGLE PROJECTION

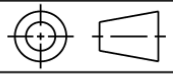

CAD MAINTAINED.
CHANGES SHALL BE INCORPORATED
ONLY BY THE DESIGN ACTIVITY

SOFTWARE

FILENAME

MATERIAL

HEAT TREATMENT

FINAL PROTECTIVE FINISH

ORIGINAL DATE OF DRAWING (YY/MM/DD) 11/01/07

DRAFTSMAN M. Harris	CHECKER C. O'Connor
ENGINEER C. O'Conner	CHECKER N/A
ENGINEER V. Ward	STRESS J. Oliveira

ENGINEER C. O'Connor

SUBMITTED T. Adams

APPROVED A. Littlefield

JOHN F. KENNEDY SPACE CENTER, NASA
KENNEDY SPACE CENTER, FLORIDA

SPECIFICATION, VAPORIZER REPLACE / REPAIR, LO2

SIZE	CAGE CODE	DWG NO	REV
A	22264	732FPC00021	-
SCALE None	UNIT WEIGHT	SHEET 1 OF 22	

KSC FORM 21-2C NS (REV 06/04) PREVIOUS EDITIONS ARE OBSOLETE

REVISION HISTORY					
PART NO.	ZONE	REV	DESCRIPTION	DATE	APPROVAL

CONTENTS

1. SCOPE....4
1.1 Background Information....4
1.2 System Description....4

2. APPLICABLE DOCUMENTS....4
2.1 Governmental....5
2.2 Non-Governmental....5

3. REQUIREMENTS....5
3.1 Definition....5
3.2 Characteristics....6
3.3 Design, Construction, and Test....10
3.4 Documentation....13
3.5 Logistics....14
3.6 Personnel and Training....14
3.7 Major-Component Characteristics....14
3.8 Precedence....14
3.9 Qualification....15
3.10 Samples....15

4. VERIFICATION....15
4.1 Responsibility for Inspection....15
4.2 Special Tests and Inspections....15
4.3 Verification Inspections....15

5. PREPARATION FOR DELIVERY....18
5.1 Preservation and Packaging....18

6. PACKAGING FOR SHIPMENT....18
6.1 Marking for Shipment....18

7. NOTES....19
7.1 Intended Use....19
7.2 Exceptions and Deviations....19
7.3 Ordering Data....19
7.4 Definitions....19

APPENDIX A LO2 VAPORIZER OPERATION....22

APPENDIX B FLANGE HARDWARE FOR SHIPPING BLANKET PRESSURE....23

REVISION HISTORY					
PART NO.	ZONE	REV	DESCRIPTION	DATE	APPROVAL

ABBREVIATIONS, ACRONYMS, AND SYMBOLS

°F	Degree Fahrenheit
ASME	American Society of Mechanical Engineers
ASTM	American Society of Testing and Materials
CCL	Commerce Control List
CDR	Critical Design Review
CFR	Code of Federal Regulations
dB	Decibels
DP	Design Pressure, the pressure that the system is designed to, i.e. MOP plus margin
EAR	Export Administration Regulations
g	Gravitational Constant
GO_2	Gaseous Oxygen
GN_2	Gaseous Nitrogen
KSC	John F. Kennedy Space Center
lbm	Pounds, mass
LO_2	Liquid Oxygen
MAWP	Maximum Allowable Working Pressure, the maximum allowable pressure that the wall thickness and components permit per applicable codes
MOP	Maximum Operating Pressure, the maximum pressure the system is expected to see in operation
NASA	National Aeronautics and Space Administration
NLR	no license required
PDR	Preliminary Design Review
psf	Pounds per Square Foot
psi	Pounds per Square Inch
psig	Pounds per Square, Inch Gage
scfh	Standard Cubic Foot per Hour
SPL	Sound Pressure Level (dB)

REVISION HISTORY					
PART NO.	ZONE	REV	DESCRIPTION	DATE	APPROVAL

1. SCOPE

This document specifies the requirements for liquid oxygen (LO_2) vaporizers to be located at launch complex 39. This specification applies to the procurement of the vaporizers only. This specification does not apply to installation and interconnecting piping for the vaporizer at the procuring agency's site. To the maximum extent practical, the vaporizers shall be "commercial, off-the-shelf" units.

1.1 Background Information

The vaporizers procured by this specification will be used to replace an existing water-bath vaporizer in the pressure-build loop for a 900,000 gallon spherical tank.

The installation site is located 3000 feet from the Atlantic Ocean, and as such will be subjected to continuous coastal marine environment. Additionally, the vaporizers will be subjected to deposition of the combustion products of solid rocket motors that are high in chlorides. Mitigation of maintenance problems resulting from the corrosive effects of this environment shall be of the greatest concern.

1.2 System Description

The pressure-build loop connects from the tank sump to the tank ullage as shown in Appendix A Figure 1. This configuration uses only the liquid head pressure, which can range between 9 – 26 psig, to drive flow through the vaporizer. The MAWP for the storage tank ullage is 12 psig.

The vaporizers will be installed at ground level and connected in parallel through a common manifold with flanged connections. The manifold will accommodate all vaporizers necessary to meet performance requirements plus one standby vaporizer.

The performance characteristics are defined in Section 3.

2. APPLICABLE DOCUMENTS

The following documents form a part of this document to the extent specified herein. When this document is used for procurement, including solicitations, or is added to an existing contract, the specific revision levels, amendments, and approval dates of said documents shall be specified in an attachment to the Solicitation/Statement of Work/Contract.

REVISION HISTORY					
PART NO.	ZONE	REV	DESCRIPTION	DATE	APPROVAL

2.1 Governmental

MIL-PRF-25567E	LEAK DETECTION COMPOUND, OXYGEN SYSTEMS
MIL-STD-2073	Standard Practice for Military Packaging
NPR 6000.1H	Requirements for Packaging, Handling, and Requirements

2.2 Non-Governmental

Aluminum Design Manual of the Aluminum Association

ASME B 16.5	Pipe flanges and flange fittings
ASME B 16.9	Factory-made wrought butt-welding fittings
ASME B16.10	Face-to-Face and End-to-End Dimensions of Valves
ASME B 31.3	Process Piping
ASTM A-312	Standard Specification for Seamless, Welded, and Heavily Cold Worked Austenitic Stainless Steel Pipes
ASTM G93	Standard Practice for Cleaning Methods and Cleanliness Levels for Material and Equipment Used in Oxygen-Enriched Environments

3. REQUIREMENTS

3.1 Definition

Vaporizer is used to pressurize liquid oxygen tank during cryogenic transfer operations.

REVISION HISTORY					
PART NO.	ZONE	REV	DESCRIPTION	DATE	APPROVAL

3.2 Characteristics

3.2.1 Performance Characteristics

3.2.1.1 Working Fluid

Liquid Nitrogen, Liquid Oxygen

3.2.1.2 Configuration

3.2.1.2.1 Type: Natural draft vaporizer

3.2.1.2.2 Inlet Connection: ASME B16.5 Class 150, Raised Face Flange (Size to match vaporizer inlet pipe)

3.2.1.2.3 Outlet Connection: ASME B16.5 Class 150, Raised Face Flange (Size to match vaporizer outlet pipe)

3.2.1.2.4 Contractor may respond with a vertical or horizontal vaporizer configuration with justification.

3.2.1.3 Flow rate

3.2.1.3.1 There are two cases that bound the vaporizer inlet pressures and allowable vaporizer pressure drops. The vaporizer system (all modules manifold in parallel, excluding spare/standby module) shall meet both cases of:

Case 1: Minimum Tank Liquid Level

Provide mass flow rate of 4.5 lbm/s or 191,972 scfh with:

11.0 psig vaporizer inlet pressure
8.7 psi maximum vaporizer pressure drop including liquid head above inlet

Case 2: Maximum Tank Liquid Level

Provide mass flow rate of 7.4 lbm/s or 315,688 scfh with:

27.0 psig vaporizer inlet pressure
21.0 psi maximum vaporizer pressure drop including liquid head above inlet

REVISION HISTORY					
PART NO.	ZONE	REV	DESCRIPTION	DATE	APPROVAL

3.2.1.3.2 The vendor shall be responsible for sizing of the vaporizers and selection of the exact number of vaporizer modules required. Size and number shall be determined from the performance of the vaporizers. The number of vaporizer modules needed to meet the performance requirements shall be increased by one unit to provide an installation site spare module that will be isolated during normal operations. The size and number of vaporizer modules shall be validated to meet the performance requirements by performance testing of only one vaporizer module as described in section 4.2

3.2.1.4 Approach Temperature

The unit(s) shall perform the above flow and pressure requirements with an approach temperature of not more than 30°F to the ambient air temperature range of 33°F to 99°F. Approach temperature is the difference between ambient temperature and outlet gas temperature.

3.2.1.5 Design Pressure

The vaporizer piping shall have a minimum design pressure (DP) of 55 psig of greater.

3.2.1.6 Design Temperature

The vaporizer piping shall have a design temperature range of –320 degrees F to +158 degrees F.

3.2.1.7 Duty Cycle

The vaporizer system shall be capable of providing the specified performance characteristics for a period of 10 hours or more.

3.2.2 Physical Characteristics

3.2.2.1 Material

All structural elements shall be constructed from 6000 series aluminum or 300 series stainless steel. All fins shall be constructed from 6000 series aluminum. All piping, fittings and components wetted by oxygen shall be 316L Stainless Steel

3.2.2.2 Piping and Tubing

All pipe shall be 316L seamless construction. All tube shall be 316L Stainless Steel constructed per ASTM A-312. Tube arrays shall be constructed with press fit extruded aluminum longitudinal fins.

REVISION HISTORY					
PART NO.	ZONE	REV	DESCRIPTION	DATE	APPROVAL

3.2.2.3 Fittings

Fittings shall be butt weld type stainless steel 316L conforming to ASME B 16.9. All connections internal to the vaporizer modules shall be butt weld pipe connections.

3.2.2.4 Flanges

Flanged fittings shall be concentrically serrated raised face, weldneck or lapped joint type (socket weld, slip on or threaded are prohibited). Flanges shall be stainless steel, Class 150 rating, conforming to ASME B 16.5. Serrations shall conform to the requirements of ASME B16.10.

3.2.2.5 Face Seals

Gaskets are expected to be glass filled PTFE 3/32 in thick. Acceptable materials are: Garlock 8573, Garlock, Inc., Palmyra, NY; Florogold, Florocarbon Co., Anaheim Ca; and Fluorogreen E-600, UFC Fluorogreen. Gaskets shall not be reused. Vendor may propose alternate connection sealing for consideration by NASA Engineering.

3.2.2.6 Fittings, Tubing, Piping and Pressure Vessels

All pressurized components shall be in accordance with ASME B 31.3.

3.2.2.7 Fasteners for Flanged Connections

Fastener assemblies used on all flanged connections with the exception of blanking flanges etc. or covers temporally installed for the purpose of fabrication, test, cleaning or shipping shall be per ASME B31.3.

3.2.2.8 Threaded Connections

Threaded pipe connections shall not be used.

3.2.2.9 Orientation and Mounting

The vaporizer units shall be designed to be installed in a vertical orientation unless approved in advance by the procuring agency. Vaporizer shall have a structural frame with legs allowing module to be free standing and suitable for fastening to concrete pad or skid.

3.2.2.10 Lifting Provisions

Permanent-lifting lugs shall be provided to facilitate lifting/lowering each vaporizer mod-

REVISION HISTORY					
PART NO.	ZONE	REV	DESCRIPTION	DATE	APPROVAL

ule. Lugs shall satisfy a factor of 5 on ultimate for load factors of 2g vertical with 0.25 g lateral. If single point failure welds are used, they shall be identified by a flag note on the engineering drawings. Any single point failure weld shall be inspected by an NDE method approved by the procuring agency. Supplier shall provide a lifting plan to be used for handling the vaporizer modules.

3.2.2.11 Grounding and Grounding Studs

Each vaporizer module shall have two grounding studs located on the support legs within 12 inches of the ground. One shall be located on the leg nearest the inlet connection and the other on the leg diagonally opposite. The grounding stud shall be welded to the support leg. Maximum resistance between any two points on a vaporizer module shall not exceed 1 ohm.

3.2.2.12 Envelope

The vendor shall indicate the envelope of each vaporizer module, the number of modules needed to meet the above requirements, and overall vaporizer system envelope. In addition, the vendor shall provide guidance for layout of the vaporizer modules (to include spacing between modules for proper operation).

3.2.3 Reliability

3.2.3.1 The vaporizer shall have a minimum 20 year service life under the conditions specified herein.

3.2.3.2 The vaporizer shall have a thermal cycle life of a minimum 7000 cycles. A thermal cycle is defined as the pipe assembly starting at ambient temperature, then being taken down to -297 degrees F, held at that temperature for a minimum of 15 minutes, and then allowed to return to ambient temperature.

3.2.4 Environmental Conditions

The vaporizer shall operate in wind driven rain, sand and salt spray located approximately 3000 feet from the Atlantic Ocean, along with the resultant ice/frost buildup, characteristic of conditions at seaside location. Wind direction may be from any point of the compass. Additionally the vaporizer modules will be subjected to deposition of the combustion products of solid rocket motors that are also high in chlorides.

3.2.4.1 Ambient Air Temperature

The vaporizer shall meet performance requirements, specified above, over the ambient air temperature range of 33 degrees F to 99 degrees F.

REVISION HISTORY					
PART NO.	ZONE	REV	DESCRIPTION	DATE	APPROVAL

3.2.4.2 Relative Humidity

The vaporizer modules shall perform in accordance with their nominal design requirements in an atmosphere with an annual relative humidity between 20% and 100%.

3.2.5 Transportability

The module design shall be compatible with the planned packaging and transportation system to the extent that loads induced in the equipment during transportation will not produce stresses, internal loads, or deflections resulting in damage to the equipment.

3.3 Design, Construction, and Test

3.3.1 Design

The vaporizer modules shall be designed, fabricated, examined, and tested in accordance with ASME B 31.3 Normal Fluid Service, Severe Cyclic Requirements. Design shall be approved by NASA Engineering prior to construction.

3.3.1.1 Structural Design

3.3.1.1.1 Structural Loads

The vaporizer tubing and support structure shall be analyzed per ASME B 31.3 Normal Fluid Service, Sever Cyclic Requirements. For wind load cases the vaporizer shall be analyzed as a solid structure (no flow paths for wind to go through the vaporizer). The following standard and user-defined load cases shall be included:

REVISION HISTORY					
PART NO.	ZONE	REV	DESCRIPTION	DATE	APPROVAL

Table 1: Structural Design Load Cases

	Sustained Loads				Occasional Loads		Thermal Range Stress (Note 3)
Load Case	Dead Load	Live Load	Pressure	Operational Wind Load (Note 1)	Hurricane Wind Load (Note 2)	Launch Induced Acoustics (Note 4)	
ASME B31.3 Requirements							
Section 302.3.5a & 302.3.5b (per Section 304) to calculate allowable thickness for pipe, elbows and fittings due to pressure			X				
Section 302.3.5c – Longitudinal Stresses due to Sustained Loads – S_L	X	X	X	X			
Section 302.3.5d – Displacement Stress Range (S_A)							X
Section P302.3.5d – Operating Stress Range (S_{oA}) (Note 5)	X	X	X	X			X
Section 302.3.6 – Occasional Load Stress (longitudinal)	With owner-defined occasional loads						
1	X	X	X	X		X	X
2	X				X		

Notes:

1. Design wind pressure on pipe = 17.0 psf, corresponds to standard wind speed of 50 mph. Applied independently to all four faces of the vaporizer unit. ASME B31.3 section 301.5.2 that leads to ASCE 7 requires per section C26.7.4 that wind loads to be considered from all directions. However, above mentioned four directions should be sufficient. Evaluate wind as a sustained load, and combined loading conditions shall be compared to 100% of the basic allowable stress.
2. Design wind pressure on pipe = 86 psf, corresponds to standard wind speed of 160 mph per ASCE 7. Applied independently to all four faces of the vaporizer unit. ASCE 7 requires per section C26.7.4 that wind loads to be considered from all directions. However, above mentioned four directions should be sufficient.
3. Design temperatures +158 deg F to -297 deg F (LO2) results in two sub-cases: Hot case = +70 deg F to +158 deg F, and Cold case = +70 deg F to -297 deg F (LO2). Note: ASME B31.3 reference temperature is 70 deg F.
4. NASA engineering shall provide acoustic data as a static load 20 workdays after PDR and CDR which will be shared with vendor to perform the stress analysis as shown in the Table 1 as owner-defined Case 1.
5. P302.3.5d is an alternative to section 302.3.5d.

REVISION HISTORY					
PART NO.	ZONE	REV	DESCRIPTION	DATE	APPROVAL

Design calculations for the vaporizer support structures, sealed and stamped by an Engineer (PE) shall be submitted for approval to the procuring agency prior to fabrication of the vaporizers.

3.3.1.2 Maintainability

The modules should be designed to be maintained at the installation site. Tool and technician access required to perform scheduled and unscheduled maintenance should be maximized. If practical, the use of flanged connections shall be limited to the inlet and outlet connections. All flanged connections shall be accessible for leak checks and maintenance to personnel working at ground level.

3.3.2 Construction

3.3.2.1 Pressure Boundary Weld Inspection

Requirements for Severe Cyclic Condition as defined in ASME B 31.3 shall apply to weld joints wetted by LO_2/GO_2. 100% radiographic inspection is required. Weld joints whose location or configuration does not permit radiographic inspection may be verified using alternative inspection technique with approval from NASA contract officer. Vendor shall propose alternative technique for each weld which does not permit radiography on a case by case basis. The radiography requirement is not waived unless vendor has received written NASA Engineering approval for alternative inspection. Weld traceability maps of welder and procedure number at each joint shall be supplied for the vaporizer assembly.

3.3.3 Name Plates and Product Marking

3.3.3.1 The vaporizer shall be permanently and legibly marked for identification on an outer surface to include the information required by B31.3 and any additional information listed below that is not included in these standards:

(1) Manufacturer's Name
(2) Manufacturer's Part Number
(3) Manufacturer's Serial Number
(4) NASA Part Number – 732FPC00021
(5) Maximum Allowable Working Pressure
(6) Hydrostatic (or Pneumostatic) Test Pressure
(7) Date of Hydrostatic (or Pneumatic) Test

Hydrostatic or Pneumatic test pressure and date shall be added to the name plate upon

REVISION HISTORY					
PART NO.	ZONE	REV	DESCRIPTION	DATE	APPROVAL

completion of acceptable test results.

3.3.4 Workmanship

Hardware shall be fabricated and finished so appearance, fit, and adherence to specified dimensions and tolerances are observed and in a manner that ensures reliable operations in accordance with the requirements specified herein. Particular attention shall be given to the neatness and thoroughness of construction and to the freedom of parts from burrs and sharp edges that might damage associated equipment or cause injury to personnel. Any item exceeding the acceptance criteria shall be repaired or replaced and reexamined by the same acceptance criteria as required for the original work.

3.3.5 Interchangeability

Hardware assemblies, components, and parts with the same part number shall be physically and functionally interchangeable.

3.3.6 Safety

N/A

3.3.7 Human-Factors Engineering

The modules should be designed to allow technicians maximum access for scheduled and unscheduled maintenance.

3.3.8 Security

N/A

3.3.9 Government-Furnished Property

N/A

3.4 Documentation

3.4.1 Minimum Design Documentation

Minimum design documentation consisting of drawings, lifting plan and design calculations shall be shipped with the vaporizer module. Documentation shall provide evidence of conformance with requirements specified in Sections 3.1, 3.2, and 3.3. The drawings shall show all information required to fabricate the vaporizer module from semi-finished and finished materials and components.

REVISION HISTORY					
PART NO.	ZONE	REV	DESCRIPTION	DATE	APPROVAL

3.4.2 Vendor Data

In addition to drawings, vendor data shall be supplied for each component/line replaceable unit and commercially purchased product. Data shall include:
(1) Description including, when necessary: size, dimensions and material.
(2) Original equipment manufacturer's name and address.
(3) Original equipment manufacturer's part number and Government standard part number if applicable.
(4) Original equipment manufacturer's test data and test results if applicable.

3.4.3 Material Certifications

Certificates of conformance shall be supplied for all materials used in the manufacture of the vaporizer modules.

3.4.4 Testing

Vendor shall provide acceptance test procedures, test procedures, weld maps, and copy of radiographed welds.

3.4.5 Weld Certificates

Vendor shall provide welder certifications for particular welds and materials used and weld inspector certifications, including Certified Welding Inspector identification number when applicable.

3.5 Logistics

Special tools or materials required to install, maintain or repair the units shall be identified.

3.6 Personnel and Training

Operator training shall be identified and training modules shall be provided as requested. Special skills required for operation and maintenance shall be identified.

3.7 Major-Component Characteristics

N/A

3.8 Precedence

N/A

REVISION HISTORY					
PART NO.	ZONE	REV	DESCRIPTION	DATE	APPROVAL

3.9 Qualification

Contractor shall conduct a performance test for the first vaporizer module only. The test shall measure inlet pressure, inlet temperature, outlet temperature, and outlet pressure. The testing flow rate shall be the maximum specified flow rate divided by the number of modules needed to meet the requirements. The inlet pressure shall not exceed 27 psig and the pressure drop through the vaporizer shall not exceed 22 psi in compliance with Case 2 of section 3.2.1.3.1. The unit shall meet the above flow and pressure requirements with an approach temperature of not more than 30°F to the ambient air temperature range of 33°F to 99°F. Approach temperature is the difference between ambient temperature and outlet gas temperature. The performance test shall be conducted using liquid oxygen which is preferred, but liquid nitrogen is acceptable as the process fluid. This qualification test shall be performed outdoors on a day with ambient temperatures between 33°F and 99°F. The flow rate, back pressure, and approach temperature requirements shall be met for a minimum of 10 continuous hours.

3.10 Samples

N/A

4. VERIFICATION

4.1 Responsibility for Inspection

Unless otherwise specified in the contract or order, the vendor shall be responsible for the performance of all inspection requirements as specified herein. Except as otherwise specified, the vendor may use his own facilities or any commercial laboratory acceptable to the Government. The Government reserves the right to perform any of the inspections set forth in the specification where such inspections are deemed necessary to ensure supplies and services conform to prescribed requirements.

4.2 Special Tests and Inspections

N/A

4.3 Verification Inspections

4.3.1 Required Acceptance Testing Chronology

The vendor shall perform the acceptance tests as listed in 4.3.2, 4.3.3 and 4.3.4 below on each vaporizer module. The acceptance tests shall be performed in the order listed below.

REVISION HISTORY					
PART NO.	ZONE	REV	DESCRIPTION	DATE	APPROVAL

Components damaged as a result of the acceptance test shall be replaced at the manufacturer's expense.

4.3.2 Pressure Testing

4.3.2.1 The pressure/leak test shall be conducted via hydrostatic testing at a minimum of 150% of the design pressure, or be conducted via pneumatic testing using GN_2 at a minimum of 110% of the design pressure.

4.3.2.2 The pressure shall be maintained for a minimum of 10 minutes. The pipe undergoing test shall exhibit no leakage while undergoing leak testing and show no permanent deformation or damage as result of the pressure testing.

4.3.2.3 Leak testing shall be performed at ambient temperature.

4.3.3 Cold Shock

The contractor shall chill each weld to LN_2 temperatures (-320°F) and perform a visual examination of each weld for damage.

4.3.4 Mass Spectrometer Leak Test

Leak test shall be performed after completion of cold shock test. The mass spectrometer leak test shall be performed locally at every weld or mechanical connection. The pneumatic mass spectrometer leak test shall be performed at system maximum operating pressure (MOP) using 90% GN_2 and 10% GHe. The surface temperature shall be between 40°F and 125°F and MOP shall be maintained for 15 minutes prior to testing. There shall be no leakage detected on the mass spectrometer set at a sensitivity of $1x10^{-15}$ m^3/sec. To accomplish this test, a mass spectrometer set capable of sensitivity to $1x10^{-16}$ m^3/sec shall be used.

4.3.5 Cleaning

The vaporizer shall be cleaned to ASTM G93 Level A utilizing test 1 and dried to dew point of minus 29°F or less prior to delivery to KSC. (The procuring agency shall provide further cleaning to NASA standards at its expense.)

4.3.6 Test Procedures

NASA Engineering shall approve the test procedure prior to performance. NASA reserves the right to observe all tests. Two weeks notification prior to tests is required.

REVISION HISTORY					
PART NO.	ZONE	REV	DESCRIPTION	DATE	APPROVAL

4.3.7 Responsibility for Verification / Inspection

4.3.7.1 The vendor shall be responsible for the performance of all verification (analysis, test, demo or inspection) requirements as specified herein. Except as otherwise specified, the vendor may use his own facilities or any commercial laboratory acceptable to NASA Engineering. NASA Engineering reserves the right to witness or perform any of the inspections set forth in the specification where such inspections are deemed necessary to ensure supplies and services conform to prescribed requirements.

4.3.7.2 The Vendor shall formulate acceptance test procedures for all components and will provide the facility and instrumentation to perform all relevant tests to ensure compliance with this specification. The acceptance test procedures shall include but not be limited to all of the testing procedures specifically outlined in this document.

4.3.7.3 All items purchased or manufactured by a subcontractor used in the Vendor's work shall be clearly identified and tabulated.

4.3.7.4 The vendor shall be responsible for providing chemical and mechanical properties for components. The vendor also shall be responsible for providing chemical and mechanical properties for materials used for each heat number used.

4.3.7.5 NASA Engineering reserves the right to have access to the Vendor's facility at any time during the design, fabrication and code testing. NASA Engineering shall have the right to witness any manufacturing or testing procedures upon request. When requested, the Vendor shall provide a minimum of 7 business days notice in advance of any test date to allow for NASA Engineering (or its designated contractor representative) to make the necessary travel arrangements.

4.3.7.6 Review of analysis data and procedures by NASA Engineering shall not release the Vendor from its responsibility to correct errors, oversights and omissions to ensure conformance to the requirements in this document and ASME code requirements.

REVISION HISTORY					
PART NO.	ZONE	REV	DESCRIPTION	DATE	APPROVAL

5. PREPARATION FOR DELIVERY

5.1 Preservation and Packaging

5.1.1 Shipping packaging shall preserve the cleanliness packaging applied per ASTM G93 of each unit intact at its destination. Install 316 stainless steel blind flanges- and stainless steel fasteners with complete bolt pattern with valve and gage as shown in Appendix B Figure 2. Gas charging equipment and fluid fittings shall also be stainless steel. Fluid fittings shall be AS standard (i.e. no pipe threads). Prior to shipping, a 2-12 psig blanket pressure of clean dry GN_2 shall be applied. Use gaskets per 3.2.2.5.

5.1.2 All pipe assembly purge pressures shall be checked and recorded and integrity seals applied prior to shipment for validation at KSC receiving site prior to acceptance.

6. PACKAGING FOR SHIPMENT

The contractor shall prepare step by step procedures for packaging the shipping unit in an enclosed container in compliance with NPR 6000.1H.These procedures shall be approved by NASA prior to shipment of any shipping unit. NASA form 1426 Class IV level C or equivalent information shall be utilized to ensure complete development of procedures for these units. See MIL-STD-2073 for guidance in developing procedures and selection of packaging materials. Packing shall comply with the manufacturer's standard commercial practice provided packing shall be sufficient to protect vaporizer assemblies against damage and maintain cleanliness as specified in Para. 5.1 during shipment. Shipping containers shall conform to freight classification rules and applicable container specifications.

6.1 Marking for Shipment

The contractor shall provide outside package marking essential to safety and to the protection or identification of the item in detail, including labels stating pressure contained in units and appropriate identification of the product on both packages and shipping containers and all markings necessary for safe delivery and for storage. Markings on unit packages, intermediate packages, and exterior shipping containers shall be in accordance with the applicable requirements of NPR 6000.1H

REVISION HISTORY					
PART NO.	ZONE	REV	DESCRIPTION	DATE	APPROVAL

7. NOTES

7.1 Intended Use

This document establishes the requirements for fabrication and testing of vaporizer used in a liquid oxygen propellant loading system

7.2 Exceptions and Deviations

Request for exceptions and/or deviations from the requirements of this specification shall be submitted to the procuring agency for review.

7.3 Ordering Data

N/A

7.4 Definitions

For the purpose of this document, the following definitions shall apply.

a. **Shall:** - Used to indicate a requirement which must be implemented and its implementation verified;

b. **Should:** Used to indicate a goal which must be addressed by the design but is not formally verified;

c. **Will:** Used to indicate a statement of fact and is not verified.

d. Vaporizer – The vaporizer includes the heat exchanger, supporting frame, and inlet/outlet interface as defined in vaporizer specification. May include more than one vaporizer module.

e. Vaporizer Module – Single vaporizer unit with inlet and outlet flanges

f. Interface – Liquid oxygen inlet and oxygen vapor outlet flanges

g. Thermal Cycle - starting at ambient temperature, then being taken down to -297 degrees F or less, held at that temperature for a minimum of 15 minutes, and then allowed to return to ambient temperature.

h. Approach temperature - the difference between ambient temperature and outlet gas temperature.

<u>NOTICE</u>. The Government drawings, specifications, and/or data are prepared for the official use

REVISION HISTORY					
PART NO.	ZONE	REV	DESCRIPTION	DATE	APPROVAL

by, or on behalf of, the United States Government. The Government neither warrants these Government drawings, specifications, or other data, nor assumes any responsibility or obligation, for their use for purposes other than the Government project for which they were prepared and/or provided by the Government, or any activity directly related thereto. The fact that the Government may have formulated, furnished, or in any way supplied the said drawings, specifications, or other data is not to be regarded, by implication or otherwise, as licensing in any manner the holder or any other person or corporation nor conveying the right or permission to manufacture, use, or sell any patented invention that may relate thereto.

REVISION HISTORY					
PART NO.	ZONE	REV	DESCRIPTION	DATE	APPROVAL

Custodian:

NASA – John F. Kennedy
Space Center
Kennedy Space Center,
Florida 32899

Preparing Activity:

John F. Kennedy Space Center
Insert name of preparing activ-
ity (office or directorate), use
black text, remove italics

SIZE	CAGE CODE	DWG NO	REV
A	22264	DRAWING #	-
SCALE None	UNIT WEIGHT	SHEET 21 OF 22	

REVISION HISTORY					
PART NO.	ZONE	REV	DESCRIPTION	DATE	APPROVAL

APPENDIX A

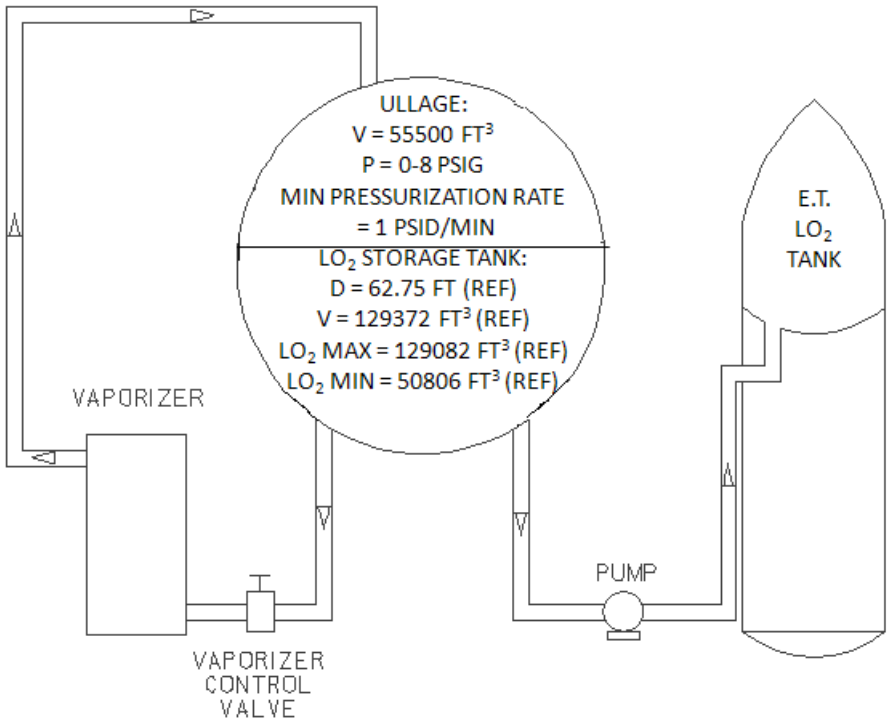

Figure 1: LO_2 VAPORIZER OPERATION

SIZE	CAGE CODE	DWG NO	REV
A	22264	DRAWING #	-
SCALE None	UNIT WEIGHT	SHEET 22 OF 22	

REVISION HISTORY					
PART NO.	ZONE	REV	DESCRIPTION	DATE	APPROVAL

APPENDIX B

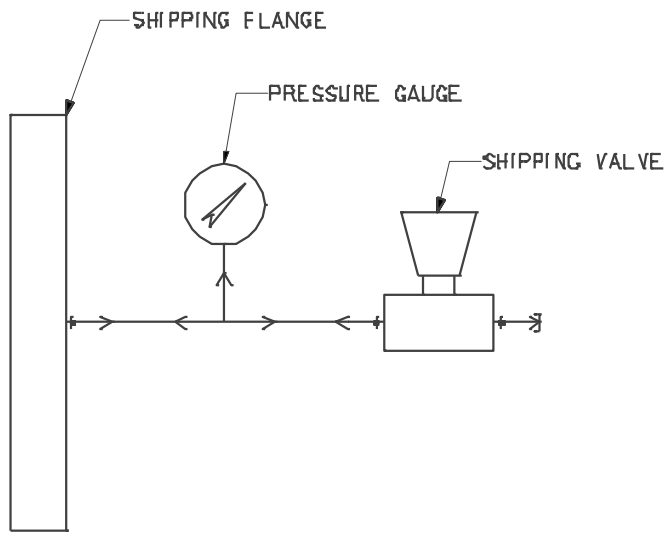

Figure 2: FLANGE HARDWARE FOR SHIPPING BLANKET PRESSURE

SIZE	CAGE CODE	DWG NO	REV
A	22264	DRAWING #	-
SCALE None	UNIT WEIGHT	SHEET 23 OF 22	