National Aeronautics and Space Administration

DRYDEN FLIGHT RESEARCH CENTER

PROJECT TITLE:

CONSTRUCT MIRROR COATING FACILITY

PROJECT INFORMATION

PROJECT ADDRESS: 2825 AVENUE P, PALMDALE, CA 93550

OWNER: LAWA/NASA

SCOPE OF WORK: REMODEL BUILDING 703 FOR MIRROR COATING FACILITY ON GROUND FLOOR IN HANGAR, NORTH SIDE

GENERAL CONTRACTOR: NASA & SUBCONTRACTORS
NASA DRYDEN FLIGHT RESEARCH CENTER
EDWARDS, CA 93523-0273

PROJECT MANAGER: RON SUN (661) 276-3374

UNSEPARATED OCCUPANCY: S-1 AND F-2 (1)

CONSTRUCTION TYPE: II-A

QUALIFICATION OF BUILDING: UNLIMITED AREA WITH AN APPROVED SPRINKLER SYSTEM AND SEPARATION ON ALL FOUR SIDES: ORDINARY HAZARD CLASS 2 OCCUPANCY.

TOTAL GROUND FLOOR AREA: 271,397 SQ. FT.
TOTAL AREA THIS PROJECT: 4,695 SQ. FT.

GOVERNING BUILDING CODES:
2007 CALIFORNIA BUILDING CODE WITH PALMDALE AMENDMENTS
2007 CALIFORNIA ELECTRICAL, MECHANICAL, PLUMBING AND ENERGY CODES
2008 LA COUNTY FIRE CODE
2008 NEC
NASA STD. 8719.11 SAFETY STANDARD FOR FIRE PROTECTION CHAPTER 5.4

ALL PRODUCTS LISTED BY I.C.B.O./U.L. NUMBER(S) SHALL BE INSTALLED PER THE REPORT AND MANUFACTURER'S WRITTEN INSTRUCTIONS. PRODUCT SUBSTITUTION(S) FOR PRODUCT(S) LISTED SHALL HAVE I.C.B.O. APPROVED EVALUATION REPORT(S) OR BE APPROVED AND LISTED BY OTHER NATIONALLY APPROVED TESTING AGENCY.

DRAWING INDEX

SHEET	TITLE
ARCHITECTURAL	
T1	TITLE AND INDEX SHEET
T2	GENERAL NOTES
A0	DEMOLITION FLOOR PLAN
A1	FLOOR PLAN
A2	REFLECTED CEILING PLAN
A3	ELEVATIONS
A4	SECTIONS
A5	DOOR SCHEDULE AND DETAILS
A6	DETAILS
A7	WALL TYPES
A8	DETAILS (1)
STRUCTURAL	
SN1	GENERAL NOTES
SN2	GENERAL NOTES
S1	KEY PLAN, PLAN VIEW, SECTION & DETAILS
S2	PRE-ENGINEERED BUILDING ROOF AND (E) MEZZANINE PLAN
S3	DETAILS
S4	DETAILS
S5	DETAILS
S6	NOTES AND DETAILS
MECHANICAL	
M0	MECHANICAL LEGEND AND NOTES
M1	MECHANICAL EQUIPMENT SCHEDULES
M2	MECHANICAL FLOOR PLAN
M3	MECHANICAL PIPING PLANS
M4	MECHANICAL DETAILS
M5	MECHANICAL DETAILS
M6	MECHANICAL DETAILS
PLUMBING	
P1	PLUMBING NOTES, LEGEND & ABBREVS.
P2	PLUMBING FLOOR PLAN
ELECTRICAL	
E1	ELEC. SYMBOL LISTS, ABBREVS. & NOTES
E2	ELECTRICAL PARTIAL BUILDING PLAN
E3	ELECTRICAL FLOOR PLAN
E4	ELECTRICAL FLOOR PLAN
E5	ELECTRICAL CEILING PLAN
E6	TITLE-24 LIGHTING FIXTURE SCHEDULE
E7	LIGHTING PHOTOMETRIC STUDY
E8	SINGLE LINE DIAGRAM & PANEL SCHEDULE
E9	ELECTRICAL DETAILS
FIRE PROTECTION*	
FS1	FIRE SPRINKLER PLAN
FA1	FIRE ALARM PLAN

* NOTE: FIRE PROTECTION DRAWINGS ARE NOT INCLUDED WITH CITY OF PALMDALE OR LOS ANGELES COUNTY FIRE DEPARTMENT SUBMITTALS (1)

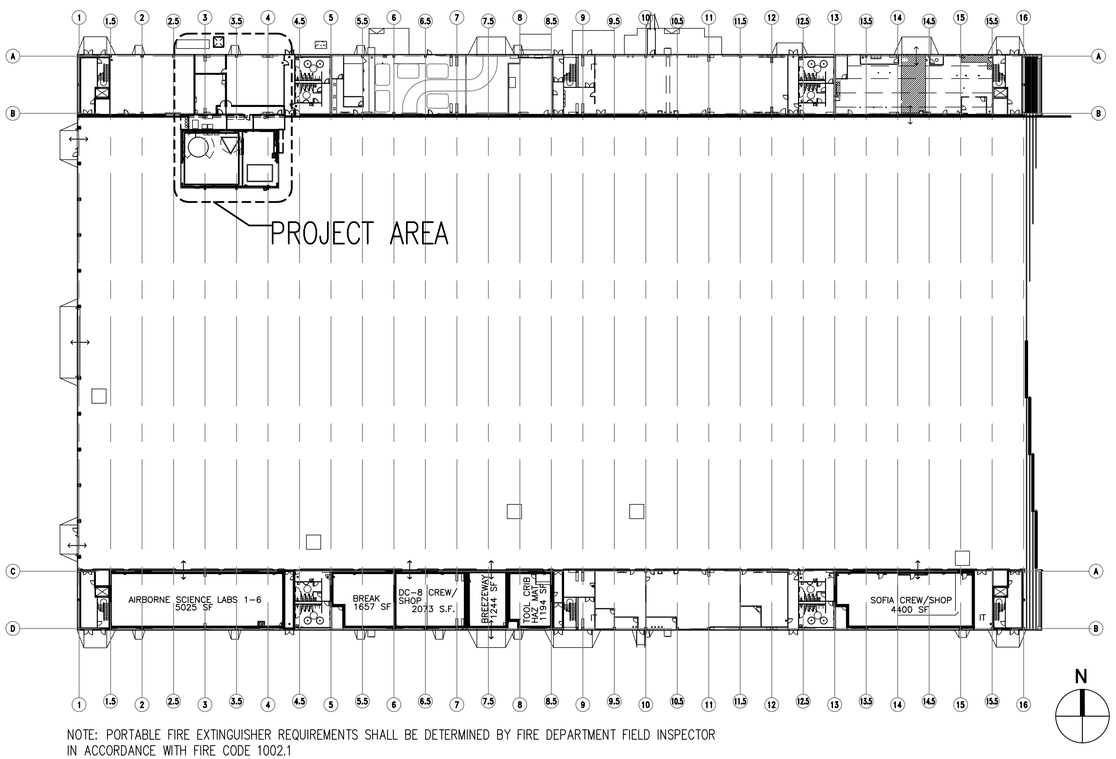

NOTE: PORTABLE FIRE EXTINGUISHER REQUIREMENTS SHALL BE DETERMINED BY FIRE DEPARTMENT FIELD INSPECTOR IN ACCORDANCE WITH FIRE CODE 1002.1

BUILDING 703 KEY PLAN — SCALE: 1" = 50'-0" — 2

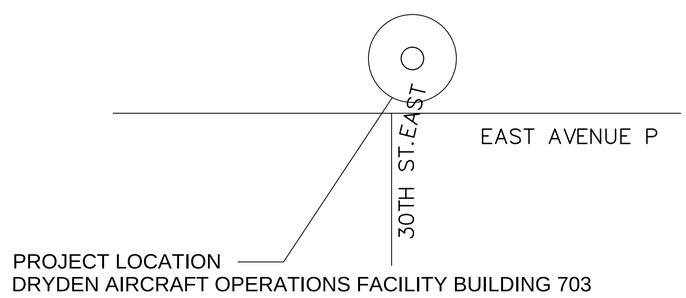

PALMDALE AIRPORT AERIAL PHOTO — SCALE: 1" = 60'-0" — 1

DEVELOPMENT ONE, INC.
1611 East Fourth Street, Suite 250
Santa Ana, California 92701
J.Bruce Camino, Architect, AIA, NCARB
(714) 689-0298
(714) 648-0197 FAX

DATE	SYM	REVISION	BY	A'PD
7/2/09	1	Palmdale Comments Amendment		
06-03-11	2	AS-BUILT		

NATIONAL AERONAUTICS AND SPACE ADMINISTRATION
DRYDEN FLIGHT RESEARCH CENTER
EDWARDS, CA

DRAWING TITLE
TITLE AND INDEX SHEET

PROJECT TITLE
CONSTRUCT MIRROR COATING FACILITY
DAOF BUILDING 703
100% FINAL DESIGN

APPROVALS	DATE
Chief, Facilities Engineering & Asset Mgmt. Office	
Project Manager	
Security Office	
Project Requestor	
Safety Office	
Telecom	

DRAWN BY	DRM	DATE STRTD	4-18-08
W.O. #		DATE PRNTD	7-13-09
PLOT SCALE		TRADE SH. No.	T1
CAD FILE NAME		EDM-1685	
		SHEET No. 1 of 40	

06-03-11 AS-BUILT

ABBREVIATIONS

ACT	ACOUSTIC TILE
ACP	ACCESS PANEL
ACT	ASBESTOS COMPOSITION TILE
AFF	ABOVE FINISH FLOOR
ALUM	ALUMINUM
BD	BOARD
BLDG	BUILDING
CPT	CARPET
CEM	CEMENT
CH	CEILING HEIGHT
CLG	CEILING
CLR	CLEAR
CMU	CONCRETE MASONRY UNIT
CONC	CONCRETE
CPOI	CONTRACTOR PROVIDED OWNER INSTALLED
CT	CERAMIC TILE
DWP	DRYWALL PAINTED
DR	DOOR
(E)	EXISTING
EM	ELASTOMERIC MEMBRANE
EN	ENAMEL
EWC	ELECTRIC WATER COOLER
EXIST	EXISTING
EC	EXPOSED CONSTRUCTION
ECP	EXPOSED CONSTRUCTION PAINTED
EXTR	EXTRUDED
EXT	EXTERIOR
FBI	FEDERAL BUREAU OF INVESTIGATION
FC	FINISH CEILING
FD	FLOOR DRAIN
FF	FINISHED FLOOR
FIN	FINISH(ED)
FEC	FIRE EXTINGUISHER CABINET
FL	FLOOR
FOW	FACE OF WALL
GALV	GALVANIZED
GL	GLASS
GWB	GYPSUM WALL BOARD
GYP	GYPSUM
HC	HOLLOW CORE
HDW	HARDWARE
HM	HOLLOW METAL
HR	HOUR
HT	HEIGHT
HWD	HARDWOOD
INS	INSULATION
INT	INTERIOR
LAM	LAMINATE
MFT	MINERAL FISSURED TILE
MIN	MINIMUM
MWP	MEMBRANE WATERPROOFING
NAT	NATURAL
(N)	NEW
NIC	NOT IN CONTRACT
OAE 1	OR APPROVED EQUAL
OPCI	OWNER PROVIDED, CONTRACTOR INSTALLED
OPOI	OWNER PROVIDED, OWNER INSTALLED
PEB	PRE-ENGINEERED BUILDING
PERF	PERFORATED
PL	PLASTER
P-LAM	PLASTIC LAMINATE
PNL	PANEL
PT	PAINT
PTN	PARTITION
PWD	PLYWOOD
QT	QUARRY TILE
RB	RUBBER BASE
RE	REFER TO
REC	RECESSED
REIN	REINFORCING
RM	ROOM
SC	SOLID CORE
SIM	SIMILAR
ST	STEEL
SS	STAINLESS STEEL
SSD	SEE STRUCTURAL DRAWINGS
STRUCT	STRUCTURAL
SUSP	SUSPENDED
T&G 1	TONGUE & GROOVE
TBD	TO BE DETERMINED
TEL	TELEPHONE
THLD	THRESHOLD
TOS	TOP OF SLAB
UBC	UNIFORM BUILDING CODE
TYP	TYPICAL
UC	UNDER CUT
UON	UNLESS OTHERWISE NOTED
VCT	VINYL COMPOSITION TILE
VIF	VERIFY IN FIELD
VWC	VINYL WALL COVERING
VYN	VINYL
WCO	WALL CLEAN OUT
WD	WOOD
WR	WATER RESISTANT
WWF	WOVEN WIRE FABRIC

SYMBOL LEGEND

EXTERIOR ELEVATION REFERENCES

BLDG. ELEV. NUMBER
SHEET DETAIL IS SHOWN ON
SHEET ON WHICH ELEVATION IS TAKEN

SYMBOL LEGEND

1 DOOR MARKER
1 WINDOW MARKER

ROOM REFERENCE

ROOM NAME
ROOM NUMBER

INTERIOR ELEVATION REFERENCE

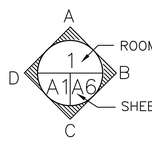

ROOM VIEW NUMBER
SHEET NO. WHERE ELEVATION IS SHOWN

DETAIL REFERENCE

DETAIL NUMBER
SHEET DETAIL IS SHOWN ON
SHEET ON WHICH DETAIL IS TAKEN

BUILDING SECTION

BUILDING SECTION NUMBER
SHEET DETAIL IS SHOWN ON
SHEET ON WHICH SECTION IS TAKEN

GENERAL NOTES

1. ALL WORK SHALL BE PERFORMED IN ACCORDANCE WITH THE FOLLOWING CODES AS ADOPTED BY THE CITY OF PALMDALE:
   2007 CA BUILDING CODE WITH PALMDALE'S AMENDMENTS, 2007 CA ELECTRIC CODE, 2007 CA PLUMBING CODE, 2007 CA ENERGY CODE, 2007 CA MECHANICAL CODE, 2008 LA COUNTY FIRE CODE
2. INSTALL ALL MANUFACTURED ITEMS, MATERIALS AND EQUIPMENT IN STRICT ACCORDANCE WITH THE MANUFACTURER'S SPECIFICATIONS.
3. CONTRACTOR IS RESPONSIBLE FOR EXAMINING ALL CONTRACT DOCUMENTS, FIELD CONDITIONS AND CONFIRMING THAT WORK MAY BE CONSTRUCTED AS SHOWN BEFORE PROCEEDING WITH CONSTRUCTION. IF THERE ARE ANY QUESTIONS REGARDING THESE OR OTHER COORDINATION QUESTIONS, THE CONTRACTOR IS RESPONSIBLE FOR OBTAINING A CLARIFICATION FROM THE CONTRACTING OFFICER BEFORE PROCEEDING WITH WORK IN QUESTION.
4. ALL WORK NOTED "N.I.C." OR "NOT IN CONTRACT" IS TO BE ACCOMPLISHED BY A CONTRACTOR OTHER THAN THE GENERAL CONTRACTOR AND IS NOT TO BE PART OF THE CONSTRUCTION AGREEMENT. THE GENERAL CONTRACTOR SHALL COORDINATE WITH OTHER CONTRACTORS AS REQUIRED.
5. "TYPICAL" AS USED IN THESE DOCUMENTS SHALL MEAN THAT THE CONDITION IS THE SAME OR REPRESENTATIVE FOR ALL SIMILAR CONDITIONS THROUGHOUT, UNLESS OTHERWISE NOTED.

GENERAL NOTES (CONT.)

6. CONTRACTOR IS TO ERECT AND MAINTAIN TEMPORARY BRACING, BARRICADES, SIGNS, AND OTHER MEASURES AS NECESSARY TO PROTECT THE PUBLIC, WORKERS, AND OTHER PERSONS, AND ADJOINING PROPERTY FROM DAMAGE FROM DEMOLITION WORK, ALL IN ACCORDANCE WITH THE APPLICABLE CODES AND REGULATION. CONTRACTOR IS TO PROVIDE NOISE AND DUST ABATEMENT AS REQUIRED TO PREVENT DISTURBANCE AND NUISANCE TO ADJACENT PREMISES AND SURROUNDING AREAS. DEMOLITION AND REMOVAL WORK SHALL BE DONE IN A MANNER WHICH WILL MINIMIZE THE SPREAD OF DUST AND FLYING PARTICLES. REMOVED MATERIALS AND DEBRIS SHALL BECOME THE PROPERTY OF THE CONTRACTOR AND SHALL BE DISPOSED OF IN A LEGAL MANNER.
7. CONTRACTOR SHALL VERIFY ALL CONDITIONS AND DIMENSIONS AT THE JOB SITE PRIOR TO BIDDING AND START OF CONSTRUCTION. IF ANY DISCREPANCIES ARE FOUND, CONTRACTING OFFICER SHALL BE NOTIFIED FOR CLARIFICATION.
8. ALL BUILDING, ELECTRICAL, PLUMBING, HVAC. AND SHOP DRAWINGS USED IN CONJUNCTION WITH THE ARCHITECTURAL DRAWINGS SHALL BE EACH CONTRACTOR'S SPECIFIC AND EXCLUSIVE RESPONSIBILITY TO VERIFY ALL EXISTING CONDITIONS AND DIMENSIONS BEFORE MANUFACTURING AND/OR FABRICATION OF ALL WORK. ANY WORK PROVIDED AND INSTALLED IN CONFLICT WITH THE ARCHITECTURAL DOCUMENTS SHALL BE CORRECTED BY EACH CONTRACTOR AT NO ADDITIONAL COST TO THE CONTRACTING AGENCY.
9. ALL FEES AND PERMITS SHALL BE PROCESSED AND OBTAINED DIRECTLY BY NASA. NO BUILDING PERMIT IS REQUIRED TO BE SECURED BY THE CONTRACTOR.
10. ALL SYMBOLS AND ABBREVIATIONS ARE CONSIDERED TO BE CONSTRUCTION STANDARDS. IF ANY CONTRACTOR HAS A QUESTION OR NEEDS CLARIFICATION, CONTRACTING AGENCY IS TO BE CONTACTED BEFORE WORK, MANUFACTURING AND/OR FABRICATION COMMENCES.
11. ALL DIMENSIONS ARE FROM FACE OF STUD TO FACE OF STUD UNLESS NOTED OTHERWISE. DOOR OPENINGS IN GYPSUM BOARD PARTITIONS NOT DIMENSIONED ARE TO BE LOCATED WITHIN 4" OF ADJOINING PARTITIONS.
12. DO NOT SCALE DRAWINGS; WRITTEN DIMENSIONS TAKE PRECEDENCE. LARGE SCALE DETAILS GOVERN OVER SMALL SCALE DETAILS.
13. ALL LEGAL EXITS SHALL BE MAINTAINED DURING CONSTRUCTION; AND, IN THEIR FINAL CONSTRUCTION, ALL LEGAL EXITS SHALL BE OPENABLE AND HAVE CODE WORTHY HARDWARE FROM INSIDE SPACES WITHOUT THE USE OF A KEY, SPECIAL EFFORT OR KNOWLEDGE, AND SHALL BE PROVIDED WITH ILLUMINATED "EXIT" SIGNS AS REQUIRED BY CODES AND ORDINANCES AND FIRE DEPARTMENT.
14. THE GENERAL CONTRACTOR SHALL PROVIDE FOR AND BE SOLELY RESPONSIBLE FOR THE PROVISION OF AND THE STRUCTURAL DESIGN OF ALL REQUIRED OR NECESSARY BLOCKING, BACKING, BRACING, FRAMING HANGERS AND OR OTHER SUPPORT FOR ALL CONSTRUCTION, FIXTURES, EQUIPMENT, CABINETRY, FURNISHINGS AND ALL ITEMS REQUIRING THE SAME. STRUCTURAL DESIGN SHALL BE SUBMITTED TO NASA FOR APPROVAL PRIOR TO CONSTRUCTION.
15. THERE SHALL BE NO SUBSTITUTIONS ALLOWED OF ANY SPECIFIED FINISH, APPLIANCE, OR FIXTURE AS CONTAINED HEREIN UNLESS APPROVAL IS GIVEN BY THE CONTRACTING OFFICER.
16. THE CONTRACTOR SHALL COMPLY WITH THE SAFETY REQUIREMENTS AND PROCEDURES SPECIFIED IN CONTRACT SPECIFICATION SECTION 01 35 14.11 40 "DRYDEN SAFETY REQUIREMENTS" IN PERFORMING WORK UNDER THIS CONTRACT.
17. ALL CALIFORNIA OSHA REQUIREMENTS MUST BE MET.
18. STRUCTURAL DESIGN OF P.E.B. TO BE PROVIDED BY P.E.B. CONTRACTOR AND SHALL INCLUDE LOADING & BRACING FOR ALL EQUIPMENT ATTACHED TO P.E.B. INCLUDING CRANE, MECHANICAL, PLUMBING AND ELECTRICAL EQUIPMENT. CALCULATIONS AND SHOP DRAWINGS SHALL BE PROVIDED AS PER SPECIFICATIONS.
19. CONTRACTOR MAY USE EXISTING NASA TRASH DUMPSTERS ON THE NORTH SIDE OF B703 FOR DISPOSAL OF CONSTRUCTION DEBRIS.
20. CONTRACTOR MAY USE EXISTING NASA RESTROOMS AND JANITOR CLOSET NEAR PROJECT SITE DURING CONTRACT OPERATIONS, PROVIDED THAT THEY ARE LEFT IN A CLEAN AND NEAT CONDITION AT THE END OF EACH WORK DAY.

PROJECT TEAM

ARCHITECTURAL

DEVELOPMENT ONE, INC.
1611 E. FOURTH STREET, SUITE 250
SANTA ANA, CA 92701
TELEPHONE: (714) 689-0298 ex. 91
FAX: (714) 648-0197
E-MAIL: architects@developmentone.net

STRUCTURAL

AQX ENGINEERING, INC.
1520 BROOKHOLLOW DR., #45
SANTA ANA, CA 92705
TELEPHONE: (714) 662-0510
FAX: (714) 662-0559

ELECTRICAL, MECHANICAL, & PLUMBING

DONN C. GILMORE & ASSOCIATES, INC.
4051 E. LA PALMA, SUITE A
ANAHEIM, CA 92807
TELEPHONE: (714) 630-4291
FAX: (714) 630-4805

FIRE PROTECTION

MUDRY & ASSOCIATES
12752 VALLEY VIEW STREET, SUITE D
GARDEN GROVE, CA 92845
TELEPHONE: (714) 373-5741

DEVELOPMENT ONE, INC.
1611 East Fourth Street, Suite 250
Santa Ana, California 92701
J.Bruce Camino, Architect, AIA, NCARB
(714) 689-0298
(714) 648-0197 FAX

DATE	SYM	REVISION	BY	A'PD
7/2/09	1	Palmdale Comments Amendment		
06-03-11	2	AS-BUILT		

NATIONAL AERONAUTICS AND SPACE ADMINISTRATION
DRYDEN FLIGHT RESEARCH CENTER
EDWARDS, CA

DRAWING TITLE
GENERAL NOTES

PROJECT TITLE
CONSTRUCT MIRROR COATING FACILITY
DAOF BUILDING 703
100% FINAL DESIGN

APPROVALS	DATE
Chief, Facilities Engineering & Asset Mgmt. Office	
Project Manager	
Security Office	
Project Requestor	
Safety Office	
Telecom	

DRAWN BY	DRM	DATE STRTD	4-18-08
W.O. #		DATE PRNTD	7-13-09
PLOT SCALE		TRADE SH. No.	EDM-1685
CAD FILE NAME		T2	SHEET No. 2 of 40

06-03-11 AS-BUILT

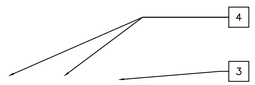

PHOTO #1	SCALE: NONE	2

PHOTO #2	SCALE: NONE	3

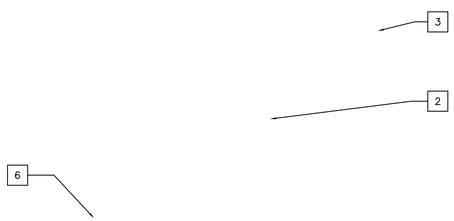

PHOTO #3	SCALE: NONE	4

PHOTO #4	SCALE: NONE	5

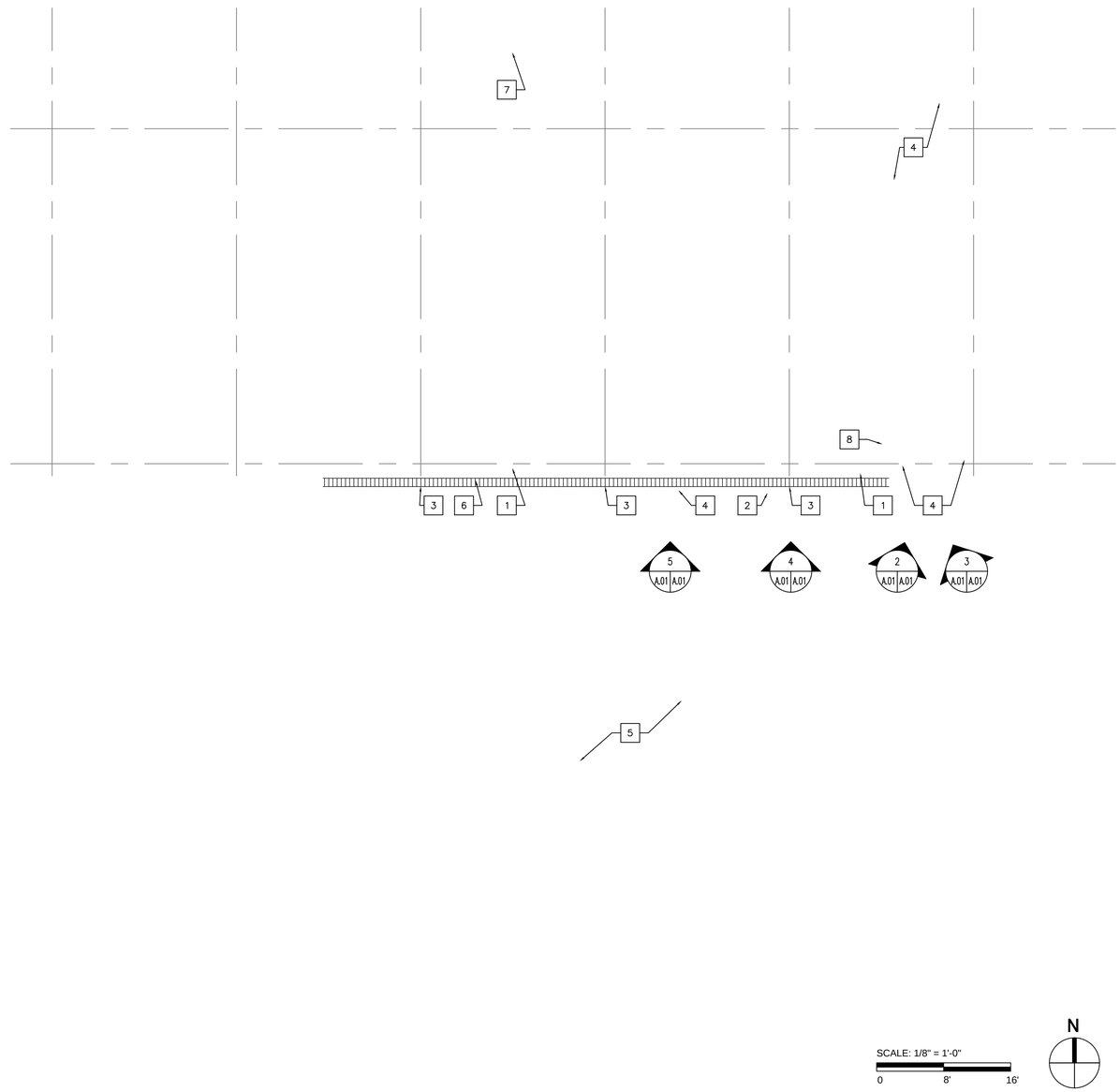

DEMOLITION FLOOR PLAN	SCALE: 1/8" = 1'-0"	1

DEMOLITION PLAN KEYNOTES

1. REMOVE (E) 2-HOUR WALL TO RECEIVE NEW DOOR
2. EXISTING AFFF HOSE ASSEMBLY TO BE RELOCATED
3. EXISTING 4" AFFF PIPING TO BE RELOCATED, TYP. (3) PLACES
4. EXISTING DOOR AND FRAMES TO REMAIN
5. EXISTING HANGER AREA
6. (E) DRAINAGE TRENCH TO REMAIN
7. REMOVE (E) ASPHALT FOR (N) CONCRETE EQUIPMENT PAD
8. REMOVE (E) 1-HR WALL FOR (N) EXTENSION OF EGRESS CORRIDOR

LEGEND

- EXISTING 2-HOUR WALL TO REMAIN
- EXISTING 1-HOUR WALL TO REMAIN
- EXISTING WALL TO REMAIN
- EXISTING WALL TO BE REMOVED

DEVELOPMENT ONE, INC.
1611 East Fourth Street, Suite 250
Santa Ana, California 92701
J.Bruce Camino, Architect, AIA, NCARB
(714) 689-0298
(714) 648-0197 FAX

DATE	SYM	REVISION	BY	A'PD
7/2/09	1	Palmdale Comments Amendment		
06-03-11	2	AS-BUILT		

NATIONAL AERONAUTICS AND SPACE ADMINISTRATION
DRYDEN FLIGHT RESEARCH CENTER
EDWARDS, CA

DRAWING TITLE
DEMOLITION FLOOR PLAN

PROJECT TITLE
CONSTRUCT MIRROR COATING FACILITY
DAOF BUILDING 703
100% FINAL DESIGN

APPROVALS	DATE
Chief, Facilities Engineering & Asset Mgmt. Office	
Project Manager	
Security Office	
Project Requestor	
Safety Office	
Telecom	

DRAWN BY	DRM	DATE STRTD	4-18-08
W.O. #		DATE PRNTD	7-13-09
PLOT SCALE		TRADE SH. No.	EDM-1685
CAD FILE NAME		A0	SHEET No. 3 of 40

06-03-11 AS-BUILT

ROOM FINISH SCHEDULE

RM#	NAME	FLOOR			WALL			CEILING			
		VINYL COMPOSITION TILE (VCT)	SEALED CONCRETE	HEAVY DUTY EPOXY FLOORING	VINYL COVE BASE	5/8" GYPSUM BD. LEVEL 4 FIN.,PAINT	MPI GLOSS LEVELS	SUSPENDED ACOUSTIC CEILING TILE (A.C.T.) GRID	1-HR RATED GYPSUM WALL BOARD CEILING, PAINTED	SUSPENDED G.W.B. CEILING	CEILING HT. (A.F.F.)
101	MIRROR COATING			●	●	●	G5			●	30'-0"
102	MIRROR STRIPPING			●	●	●	G5			●	16'-0"
103	PUMPS			●	●	●	G1			●	10'-0"
104	GOWN			●	●	●	G5			●	9'-0"
105	OFFICE	●			●	●	G3	●			9'-0"
106	MECHANICAL		●		●	●	G1				OPEN
107	EXIT CORRIDOR	●			●	●	G3		●		9'-0"

FINISH LEGEND

V.C.T	ARMSTRONG EXCELON IMPERIAL TEXTURE – #51836 "SHELTER WHITE" – 12" SQUARE, ⅛" THICK
WALL BASE	ARMSTRONG 4" VINYL COVE BASE – COLOR T.B.D.
A.C.T.	USG "RADAR", 2'X4', ⅝" THICK FOR GRID CEILING AREAS
CEILING GRID	DONN DX–USG 15/16" WIDE T–BAR WITH ⅞" EDGE ANGLE, FLAT WHITE
PLAM BASE	T.B.D. (WILSONART OR APPROVED EQUAL)
PAINT	ACRYLIC SEMI–GLOSS ENAMEL – NASA BEIGE SEE SCHEDULE FOR SHEEN

GLOSS LEVEL	DESCRIPTION	UNITS @ 60°	UNITS @ 60°
G1	MATTE OR FLAT	0 TO 5	10 MAX
G2	VELVET	0 TO 10	10 TO 35
G3	EGGSHELL	10 TO 25	10 TO 35
G4	SATIN	20 TO 35	35 MIN
G5	SEMI–GLOSS	35 TO 70	
G6	GLOSS	70 TO 85	
G7	HIGH GLOSS		

NOTE: ALL FINISHES TO BE PROVIDED AS SPECIFIED OR APPROVED EQUAL.

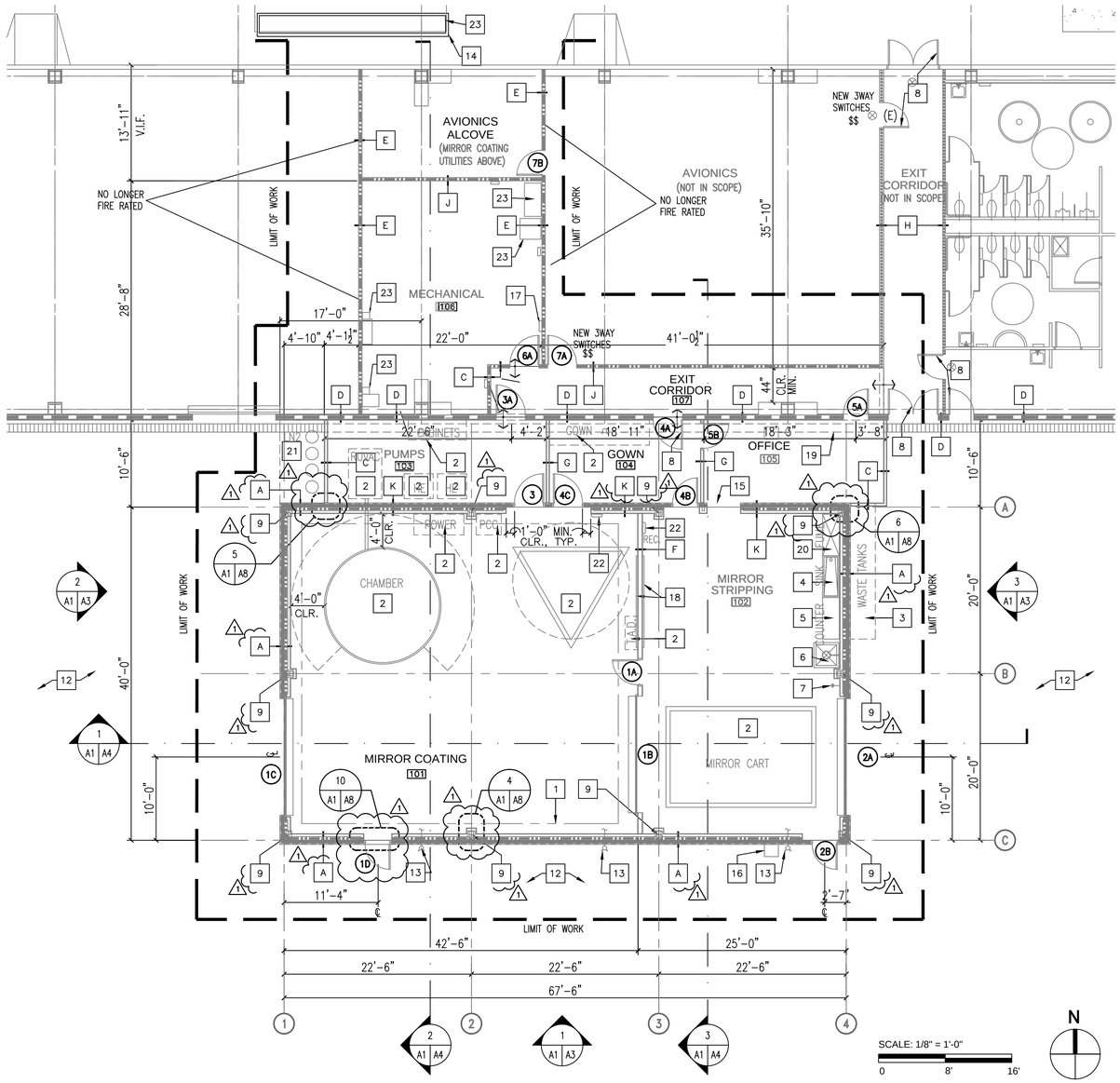

FLOOR PLAN 1

SCALE: 1/8" = 1'-0"

FLOOR PLAN KEYNOTES

1. EXTENT OF TRAVEL OF 5 TON CAPACITY, THREE–AXIS UNDERHUNG BRIDGE CRANE AND HOIST, SUSPENDED FROM ROOF STRUCTURE ABOVE
2. EXISTING MIRROR COATING EQUIPMENT BY GOVERNMENT TO BE RELOCATED FROM NASA AMES
3. WASTE WATER TANK STORAGE AREA. (TANKS ARE N.I.C.)
4. 30"x60" FIBERGLASS LAB SINK WITH INTEGRAL BACKSPLASH – REFER TO PLUMBING DRAWINGS
5. STAINLESS STEEL COUNTERTOP WITH INTEGRAL BACKSPLASH AND PLASTIC LAMINATE BASE CABINETS
6. EYEWASH AND SAFETY SHOWER (SELF–CONTAINED UNIT) – PROVIDED BY GOVERNMENT
7. HOSE BIBB @ 3'-0" A.F.F.
8. (E) DOORS AT EXIT CORRIDOR TO REMAIN
9. 1–HR RATED STEEL COLUMN WITH THIN–FILM INTUMESCENT FIREPROOFING, UL NO. X–625, ALBI CLAD TF OR APPROVED EQUAL
10. NOT USED
11. NOT USED
12. EXISTING HANGAR AREA
13. RELOCATE EXISTING 4" AFFF PIPING FROM HANGER WALL. EXTEND WITH 4" SCHEDULE 40 BLACK STEEL GROOVED PIPE WITH VICTAULIC FITTINGS
14. NEW CONCRETE CHILLER PAD – SEE MECHANICAL DRAWINGS
15. 4'-0"x4'-0" WINDOW – SEE DETAIL 5/A6
16. RELOCATE EXISTING AFFF HOSE ASSEMBLY
17. 10 LB. ABC MULTIPURPOSE DRY CHEMICAL FIRE EXTINGUISHER – SEE DETAIL 11/A6 SURFACE MOUNTED
18. 12"x 10 GA BACKING PLATE @ 11'-0" A.F.F. BOTH SIDES OF WALL(FOR HANGING EQUIPMENT)
19. EXISTING FLOOR TRENCH TO BE COVERED. SEE DETAIL 6/A6.
20. FUME HEAD
21. LN2/N STORAGE AREA (EQUIPMENT PROVIDED BY GOVERNMENT)
22. 10 LB. BC AMEREX (HALOTRON) PORTABLE FIRE EXTINGUISHER – SEE DETAIL 11/A6
23. SEE MECHANICAL AND ELECTRICAL FOR EQUIPMENT.

WALL TYPES

- A (N) 1–HR RATED COMPOSITE INSULATED WALL PANEL SYSTEM WITH EXTERIOR METAL CLADDING ON P.E.B. FRAME
- B (N) GWB FURRING ON 3 5/8" METAL STUDS AT INSIDE FACE OF Z–GIRTS – FLOOR TO CEILING, TYP.
- C (N) 1–HR RATED G.W.B. PARTITION – CONCRETE FLOOR SLAB TO STRUCTURAL DECK
- D (E) 2–HOUR FIRE–RATED G.W.B. SEPARATION WALL AT MAIN HANGAR
- E (N) FULL HEIGHT PARTITION WALL – CONCRETE FLOOR SLAB TO STRUCTURAL DECK. SEE DETAIL BY DEV.1 THIS DWG. SET
- F (N) G.W.B. PARTITION ON 6" METAL STUDS – FLOOR TO CEILING
- G (N) G.W.B. PARTITION ON 3 5/8" METAL STUDS – FLOOR TO CEILING
- H (E) 1–HOUR RATED FULL HEIGHT PARTITION WALL – CONCRETE FLOOR SLAB TO STRUCTURAL DECK
- J (N) 1–HOUR RATED PARTITION WALL – CONCRETE FLOOR SLAB TO STRUCTURAL DECK

NOTE: PRE–ENGINEERED BUILDING DESIGN STRUCTURAL STEEL AND CALCULATIONS TO BE PROVIDED BY PRE–ENGINEERED BUILDING PROVIDER. FULL SHOP DRAWINGS REQUIRED.

NOTE: REFER TO SHEET A7 FOR WALL TYPE DRAWINGS.

LEGEND

- EXISTING 2–HOUR WALL TO REMAIN (D)
- EXISTING 1–HOUR WALL TO REMAIN (H)
- EXISTING WALL TO REMAIN
- NEW 1–HOUR WALL (J,E,C,)
- NEW WALL (G,F,B)
- NEW 1–HOUR 'PEB' WALL (A)
- FLOOR FINISH TRANSITION
- 1D NEW DOOR – SEE SCHEDULE ON SHEET A5
- SOFFIT 12" ABOVE DOOR OR WINDOW

DEVELOPMENT ONE, INC.
1611 East Fourth Street, Suite 250
Santa Ana, California 92701
J.Bruce Camino, Architect, AIA, NCARB
(714) 689-0298
(714) 648-0197 FAX

DATE	SYM	REVISION	BY	A'PD
7/2/09	1	Palmdale Comments Amendment		
06–03–11	2	AS-BUILT		

NATIONAL AERONAUTICS AND SPACE ADMINISTRATION
DRYDEN FLIGHT RESEARCH CENTER
EDWARDS, CA

DRAWING TITLE
FLOOR PLAN

PROJECT TITLE
CONSTRUCT MIRROR COATING FACILITY
DAOF BUILDING 703
100% FINAL DESIGN

APPROVALS	DATE
Chief, Facilities Engineering & Asset Mgmt. Office	
Project Manager	
Security Office	
Project Requestor	
Safety Office	
Telecom	

DRAWN BY	DRM	DATE STRTD	4–18–08
W.O. #		DATE PRNTD	7–13–09
PLOT SCALE		TRADE SH. No.	EDM–1685
CAD FILE NAME		A1	SHEET No. 4 of 40

06–03–11 AS-BUILT

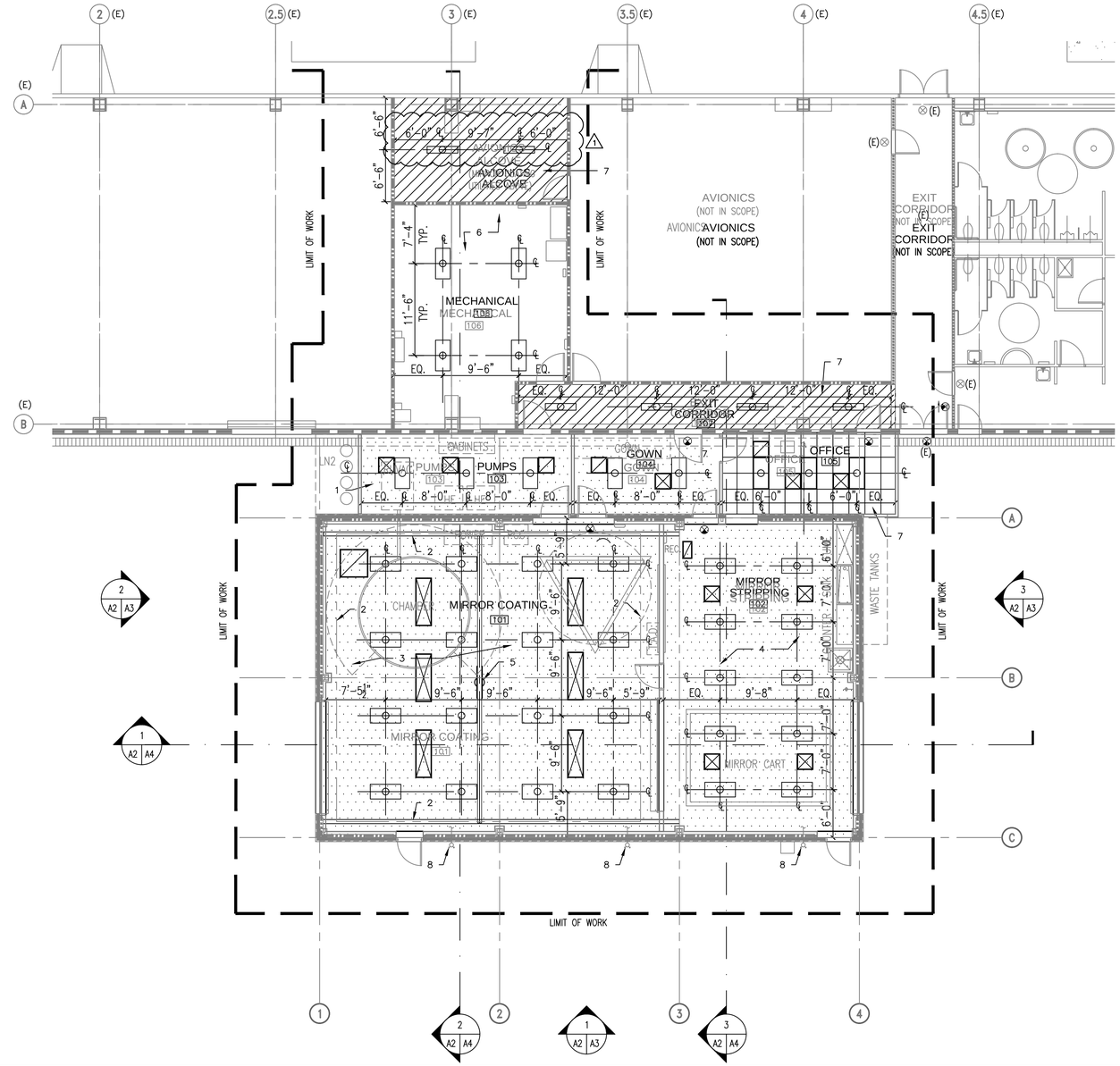

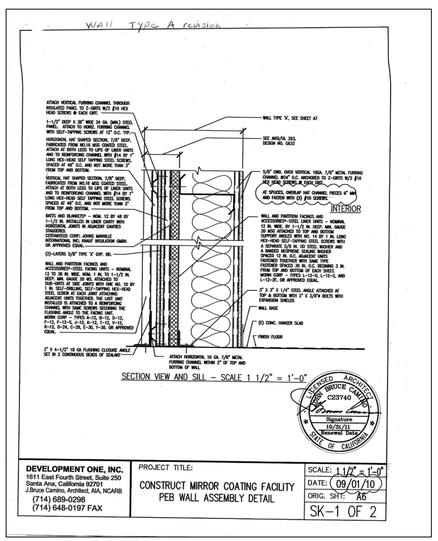

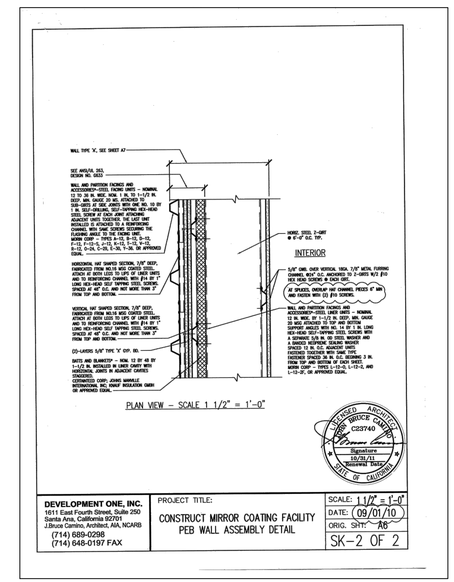

SCALE: 1/8" = 1'-0"
0 8' 16'

N

REFLECTED CEILING KEYNOTES

1. 9'–0" CEILING HEIGHT TYPICAL
2. SUPPORT BEAM FOR BRIDGE CRANE
3. 30'–0" CEILING HEIGHT
4. 16'–0" CEILING HEIGHT
5. 5 TON CAPACITY, THREE–AXIS UNDERHUNG BRIDGE CRANE AND HOIST, SUSPENDED FROM ROOF STRUCTURE
6. NO CEILING – OPEN TO FIREPROOFED DECK ABOVE
7. 9'–0" CEILING HEIGHT
8. RELOCATED EXISTING 4" AFFF PIPING (3 LOCATIONS)

LEGEND

- 1X4 FLUORESCENT STRIP LIGHT FIXTURE RECESSED MOUNT OR SURFACE MOUNT
- 2X4 FLUORESCENT GRID, RECESSED, OR SURFACE MOUNTED LIGHT FIXTURE. SEE E5
- SUPPLY AIR VENT
- RETURN AIR VENT
- CEILING–MOUNTED EMERGENCY EXIT SIGN. ARROWS AS REQUIRED.

NOTE: NEW CONSTRUCTION AREA TO BE FULLY SPRINKLERED THROUGHOUT

- SUSPENDED G.W.B. CEILING – REFER TO DETAIL 10/A6
- 1–HR RATED G.W.B. CEILING – REFER TO DETAIL 4/A6
- SOFFIT 12" ABOVE DOOR OR WINDOW
- 2X4 SUSPENDED GRID CEILING AT 9'–0" A.F.F. U.O.N. – REFER TO DETAIL 7,8, & 9/A6
- OPEN TO ABOVE

REFLECTED CEILING PLAN

SCALE: 1/8" = 1'-0"

1

DEVELOPMENT ONE, INC.
1611 East Fourth Street, Suite 250
Santa Ana, California 92701
J.Bruce Camino, Architect, AIA, NCARB
(714) 689-0298
(714) 648-0197 FAX

DATE	SYM	REVISION	BY	A'PD
7/2/09	1	Palmdale Comments Amendment		
06–03–11	2	AS-BUILT		

NATIONAL AERONAUTICS AND SPACE ADMINISTRATION
DRYDEN FLIGHT RESEARCH CENTER
EDWARDS, CA

DRAWING TITLE
REFLECTED CEILING PLAN

PROJECT TITLE
CONSTRUCT MIRROR COATING FACILITY
DAOF BUILDING 703
100% FINAL DESIGN

APPROVALS	DATE
Chief, Facilities Engineering & Asset Mgmt. Office	
Project Manager	
Security Office	
Project Requestor	
Safety Office	
Telecom	

DRAWN BY	DRM	DATE STRTD	4–18–08
W.O. #		DATE PRNTD	7–13–09
PLOT SCALE		TRADE Sh. No.	EDM–1685
CAD FILE NAME		A2	SHEET No. 5 of 40

06–03–11 AS-BUILT

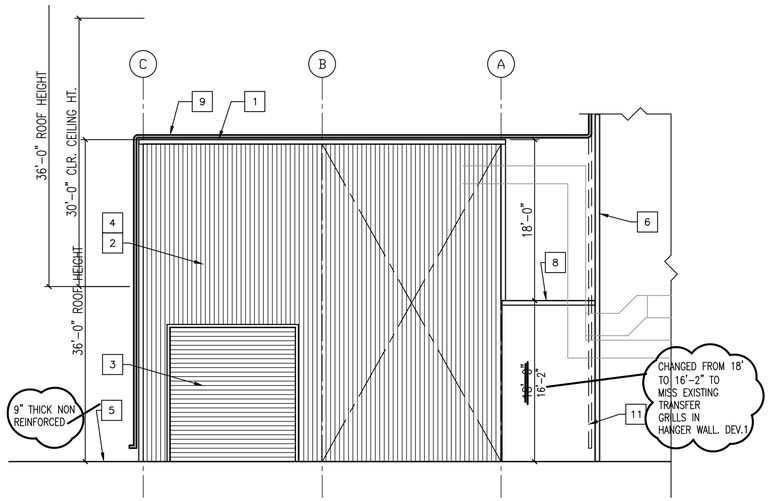

EAST ELEVATION

SCALE 1/8" = 1'-0" | 3 A1 A2 A3

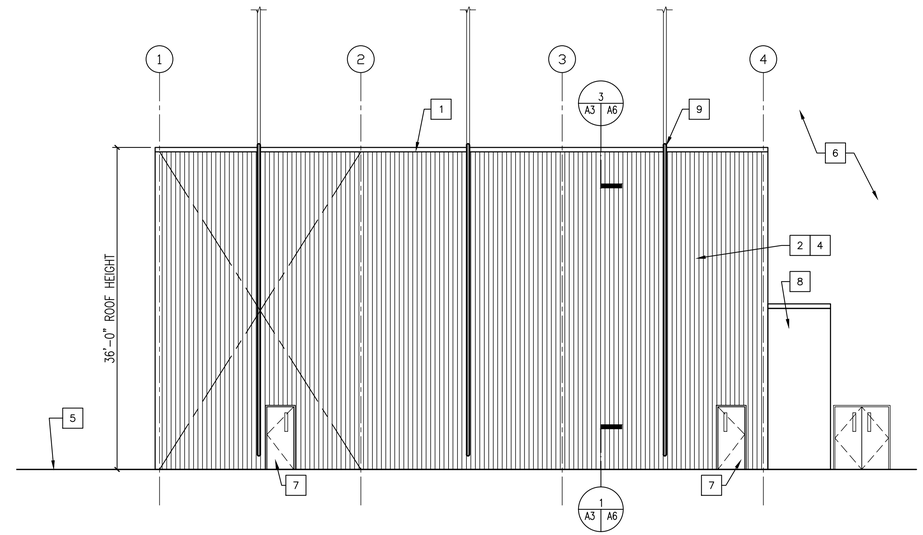

SOUTH ELEVATION

SCALE 1/8" = 1'-0" | 1 A1 A2 A3

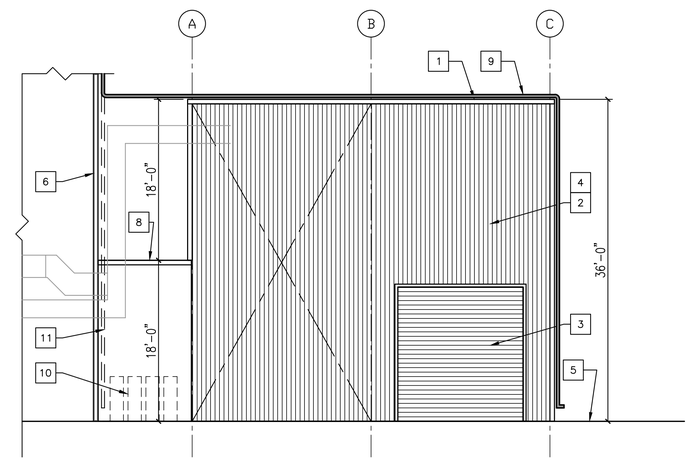

WEST ELEVATION

SCALE 1/8" = 1'-0" | 2 A1 A2 A3

ELEVATION KEYNOTES

1. 1-HR FIRE-RATED COMPOSITE INSULATED PANEL SYSTEM WITH EXTERIOR METAL CLADDING AT ROOF
2. 1-HR FIRE-RATED COMPOSITE INSULATED WALL PANEL SYSTEM WITH EXTERIOR METAL CLADDING
3. OVERHEAD COILING DOOR.
4. PRE-ENGINEERED BUILDING (PEB) AND SUPPORTING STRUCTURAL STEEL TO BE DESIGNED AND CALC'D BY PEB CONTRACTOR
5. (E) HANGAR FLOOR SLAB – 12" THICK – WITH (E) STEEL REINFORCEMENT
6. EXISTING 2-HOUR WALL (6" METAL STUDS W/ 2 LAYERS ⅝" TYPE "X" GWB ON EACH SIDE) AT MAIN HANGAR AREA
7. EMERGENCY EXIT DOOR WITH NARROW LITE VISION PANEL.
8. 1-HR FIRE RATED FRAMED GWB ENCLOSURE BETWEEN P.E.B. AND EXISTING HANGAR WALL
9. RELOCATE EXISTING 4" AFFF PIPING (3 LOCATIONS) AND 1 HOSE REEL ASSEMBLY
10. LN2/N STORAGE AREA (EQUIPMENT PROVIDED BY OTHERS)
11. (E) LOCATION OF AFFF PIPING TO BE RELOCATED

DEVELOPMENT ONE, INC.
1611 East Fourth Street, Suite 250
Santa Ana, California 92701
J.Bruce Camino, Architect, AIA, NCARB
(714) 689-0298
(714) 648-0197 FAX

DATE	SYM	REVISION	BY	A'PD
7/2/09	1	Palmdale Comments Amendment		
06-03-11	2	AS-BUILT		

NATIONAL AERONAUTICS AND SPACE ADMINISTRATION
DRYDEN FLIGHT RESEARCH CENTER
EDWARDS, CA

DRAWING TITLE
ELEVATIONS

PROJECT TITLE
CONSTRUCT MIRROR COATING FACILITY
DAOF BUILDING 703
100% FINAL DESIGN

APPROVALS	DATE
Chief, Facilities Engineering & Asset Mgmt. Office	
Project Manager	
Security Office	
Project Requestor	
Safety Office	
Telecom	

DRAWN BY	DRM	DATE STRTD	4-18-08
W.O. #		DATE PRNTD	7-13-09
PLOT SCALE		TRADE SKI. No.	EDM-1685
CAD FILE NAME	A3	SHEET No. 6 of 40	

06-03-11 AS-BUILT

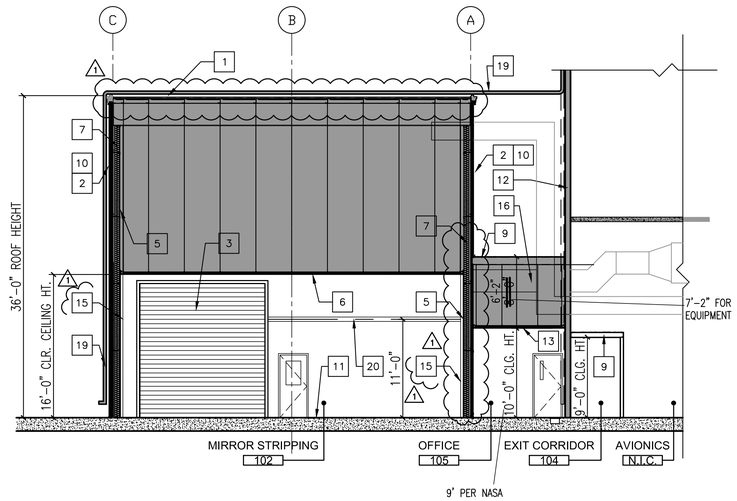

SECTION FACING WEST

SCALE 1/8" = 1'-0" 3 A1 A2 A4

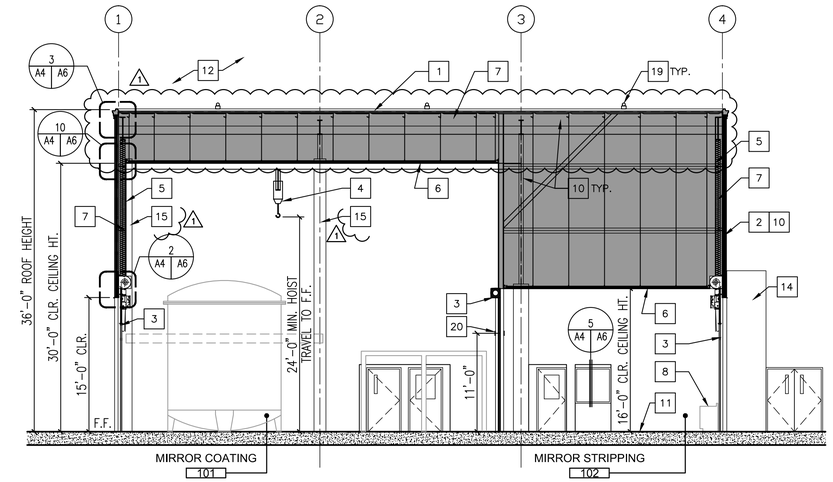

SECTION FACING NORTH

SCALE 1/8" = 1'-0" 1 A1 A2 A4

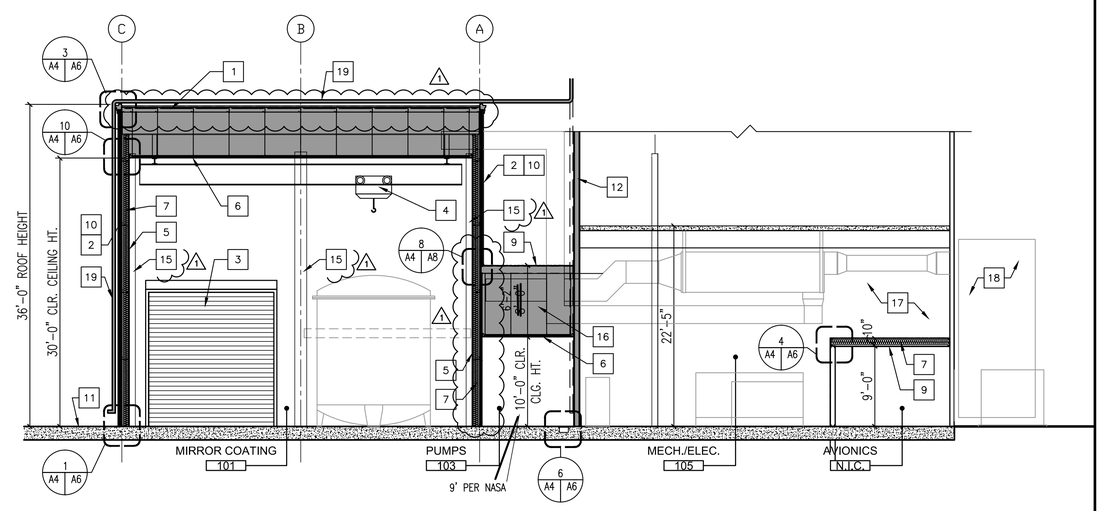

SECTION FACING WEST

SCALE 1/8" = 1'-0" 2 A1 A2 A4

SECTION KEYNOTES

1. 1-HR FIRE RATED COMPOSITE INSULATED PANEL SYSTEM WITH EXTERIOR METAL CLADDING AT ROOF
2. 1-HR FIRE RATED COMPOSITE INSULATED WALL PANEL SYSTEM WITH EXTERIOR METAL CLADDING
3. OVERHEAD COILING DOOR.
4. 5 TON CAPACITY, THREE-AXIS UNDERHUNG BRIDGE CRANE AND HOIST, SUSPENDED FROM ROOF STRUCTURE
5. GWB FURRING ON 3 5/8" METAL STUDS AT INSIDE FACE OF Z-GIRTS - FLOOR TO CEILING, TYP.
6. SUSPENDED GWB CEILING, PAINTED
7. R-19 INSULATION, VINYL SCRIM-FACED
8. STAINLESS STEEL COUNTERTOP WITH INTEGRAL BACKSPLASH
9. 1-HR FIRE RATED GWB CEILING - SEE DETAIL 4/A6 (SIM.)
10. PRE-ENGINEERED BUILDING (PEB) STRUCTURAL STEEL TO BE DESIGNED AND CALC'D BY PEB CONTRACTOR
11. (E) HANGAR FLOOR SLAB - 9" THICK
12. EXISTING 2-HOUR WALL (6" METAL STUDS W/ 2 LAYERS 5/8" TYPE "X" GWB ON EACH SIDE) AT MAIN HANGAR AREA
13. 2X4 SUSPENDED GRID CEILING
14. 1-HR FIRE RATED FRAMED GWB ENCLOSURE BETWEEN P.E.B. AND EXISTING HANGAR WALL
15. 1-HR RATED STEEL COLUMN WITH THIN-FILM INTUMESCENT FIREPROOFING, UL NO. X-625, ALBI CLAD TF OR APPROVED EQUAL
16. UTILITY CHASE FROM MECHANICAL ROOM TO PEB.
17. UTILITY CONNECTION AREA FROM MECHANICAL ROOM TO EXTERIOR OF HANGAR STRUCTURE ABOVE ALCOVE AT AVIONICS AREA.
18. UTILITY AREA AT EXTERIOR OF HANGAR BUILDING. SEE MECHANICAL, PLUMBING AND ELECTRICAL DRAWINGS.
19. RELOCATE EXISTING 4" AFFF PIPING (3 LOCATIONS) AND 1 HOSE REEL ASSEMBLY
20. 12" x 10 GA BACKING PLATE AT 11'-0" A.F.F. O.C. (ANCHOR TO WALL STUDS OVER GWB) BOTH SIDES

DEVELOPMENT ONE, INC.
1611 East Fourth Street, Suite 250
Santa Ana, California 92701
J.Bruce Camino, Architect, AIA, NCARB
(714) 689-0298
(714) 648-0197 FAX

DATE	SYM	REVISION	BY	A'PD
7/2/09	1	Palmdale Comments Amendment		
06-03-11	2	AS-BUILT		

NATIONAL AERONAUTICS AND SPACE ADMINISTRATION
DRYDEN FLIGHT RESEARCH CENTER
EDWARDS, CA

DRAWING TITLE
SECTIONS

PROJECT TITLE
CONSTRUCT MIRROR COATING FACILITY
DAOF BUILDING 703
100% FINAL DESIGN

APPROVALS	DATE
Chief, Facilities Engineering & Asset Mgmt. Office	
Project Manager	
Security Office	
Project Requestor	
Safety Office	
Telecom	

DRAWN BY	DRM	DATE STRTD	4-18-08
W.O. #		DATE PRNTD	7-13-09
PLOT SCALE / CAD FILE NAME	TRADE SH. No. A4	EDM-1685	SHEET No. 7 of 40

06-03-11 AS-BUILT

DOOR SCHEDULE

NUMBER	TYPE	SIZE WIDTH	SIZE HEIGHT	SIZE THICKNESS	HARDWARE	RATING	DOOR MATERIAL	FRAME MATERIAL	DETAILS HEAD (A5) U.N.O.	DETAILS JAMB (A5) U.N.O.	DETAILS PERIMETER SEAL (A5) U.N.O.	FINISH DOOR	FINISH FRAME
1A	G	3'–0"	7'–0"	1–3/4"	2	–	HOLLOW METAL	H.M.	5	7	1	PT.	PT.
1B	B	14'–0"	15'–0"	–	–	–	STEEL	STEEL	4	2	–	PT.	PT.
1C	B	14'–0"	15'–0"	–	– (1)	60	STEEL	STEEL	2/A6	2	–	PT.	PT.
1D	N	3'–0"	7'–0"	1–3/4"	4	45	HOLLOW METAL	H.M.	11/A8	10/A8 (1)	1	PT.	PT.
2A	B	14'–0"	15'–0"	–	–	60	STEEL	STEEL	2/A6	2	–	PT.	PT.
2B	N	3'–0"	7'–0"	1–3/4"	5	45	HOLLOW METAL	H.M.	5	7	1	PT.	PT.
3	N	3'–6"	7'–0"	1–3/4"	1	–	HOLLOW METAL	H.M.	11/A8 SIM.	10/A8 SIM. (1)	1	PT.	PT.
3A	N	3'–6"	7'–0"	1–3/4"	4	90MIN	HOLLOW METAL	H.M.	5	7	–	PT.	PT.
4A	(E)	–	–	–	4	90MIN (V.I.F.)	–	–	–	–	1	–	–
4B	G	3'–0"	7'–0"	1–3/4"	1	–	HOLLOW METAL	H.M.	11/A8 SIM.	10/A8 SIM.	–	PT.	PT.
4C	G	3'–6"	7'–0"	1–3/4"	1 (1)	–	HOLLOW METAL	H.M.	11/A8 SIM.	10/A8 SIM. (1)	–	PT.	PT.
5A	N	3'–6"	7'–0"	1–3/4"	4	90MIN	HOLLOW METAL	H.M.	5	6	–	PT.	PT.
5B	N	3'–0"	7'–0"	1–3/4"	2	–	HOLLOW METAL	H.M.	5	7	1	PT.	PT.
6A	N	3'–6"	7'–0"	1–3/4"	1 (1)	20MIN	HOLLOW METAL	H.M.	5	7	–	PT.	PT.
7A	N	3'–6"	7'–0"	1–3/4"	1	20MIN	HOLLOW METAL	H.M.	5	7	–	PT.	PT.
7B	N	3'–0"	7'–0"	1–3/4"	1	20MIN	HOLLOW METAL	H.M.	5	7	–	PT.	PT.

NOTES:
1. ALL RATED DOORS AND WINDOWS SHALL DISPLAY VISIBLE UL RATING DECAL.
2. VERIFY LOCATION OF EXISTING ROLL–UP DOOR IS CLEAR OF ANY NEW CONSTRUCTION.
3. ALL OPENINGS IN CORRIDORS SHALL COMPLY WITH THE REQUIREMENTS SET FORTH IN BUILDING CODE 1004.3.4.3.2 INCLUDING TIGHT FITTING SMOKE–AND–DRAFT–CONTROL DOOR ASSEMBLIES HAVING A 20 MINUTE FIRE–RESISTIVE RATING, AND 45 MINUTE FIRE–RESISTIVE FIXED GLAZED WINDOWS.

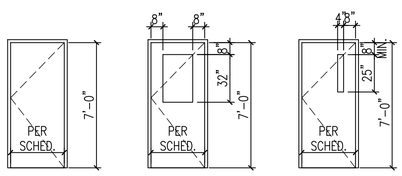

(F) FLUSH PANEL HOLLOW METAL DOOR, PAINTED.
(G) FLUSH PANEL HOLLOW METAL DOOR, PAINTED.
(N) FLUSH PANEL HOLLOW METAL DOOR, PAINTED.

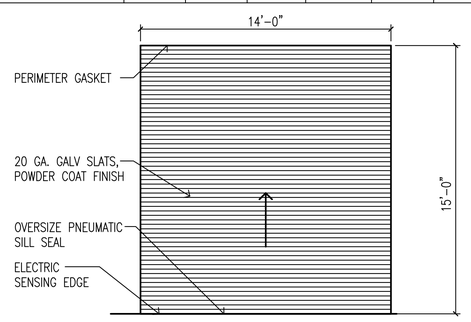

(B) OVERHEAD COILING DOOR, MOTORIZED OPERATION SEE DETAIL 3/A5

(1) NOTE: ELECTRIC OPERATOR FOR OVERHEAD DOOR MUST INTERLOCK WITH HVAC SYSTEM DIGITAL CONTROLS. SEE MECHANICAL DRAWINGS.

HARDWARE SET 1
3 EA. HINGE
1 EA. PASSAGE FUNCTION LEVER LATCH SET
1 EA. THRESHOLD
1 EA. SURFACE CLOSER

HARDWARE SET 2
3 EA. HINGE
1 EA. LEVER PASSAGE LATCHSET
PERIMETER GASKET
AUTOMATIC DROP BOTTOM
FLUTELESS ALUMINUM THRESHOLD

HARDWARE SET 3
(TO BE ADDED TO EXISTING DOOR)
1 EA. STOREROOM FUNCTION LEVER DEVICE
PERIMETER GASKET
AUTOMATIC DROP BOTTOM
FLUTELESS ALUMINUM THRESHOLD

HARDWARE SET 4
3 EA. HINGE
1 EA. STOREROOM LOCK LEVER DEVICE
1 EA. THRESHOLD
1 EA. SURFACE CLOSER
1 EA ELECTRICAL STRICK ADAMS R1JB
WITH ADU ALARM
VON DUPRIN SERIES 99
EXIT ONLY
1 EA. THRESHOLD

HARDWARE SET 5
3 EA. HINGE
1 EA. STOREROOM LEVER LOCK DEVICE
1 EA. SURFACE CLOSER
PERIMETER GASKET
AUTOMATIC DROP BOTTOM
FLUTELESS ALUMINUM THRESHOLD

HARDWARE SET 6
3 EA. HINGE
1 EA. LEVER PASSAGE LATCHSET
1 EA. SURFACE CLOSER
PERIMETER GASKET
AUTOMATIC DROP BOTTOM
FLUTELESS ALUMINUM THRESHOLD

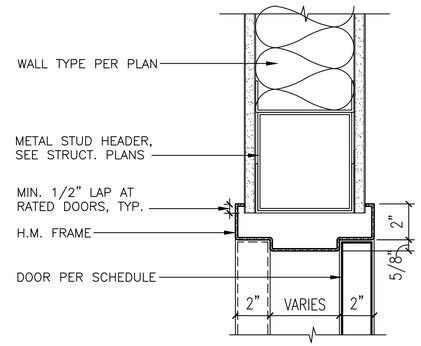

DOOR HEAD

SCALE: 3" = 1'–0" (5/A5 A5)

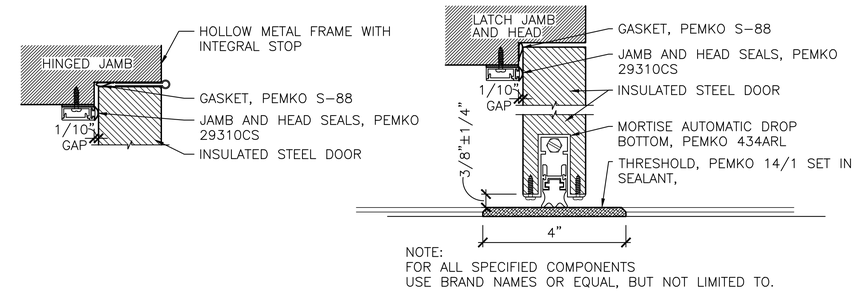

NOTE:
FOR ALL SPECIFIED COMPONENTS USE BRAND NAMES OR EQUAL, BUT NOT LIMITED TO.

DOOR PERIMETER GASKET

SCALE: 1 1/2" = 1'–0" (1/A5 A5)

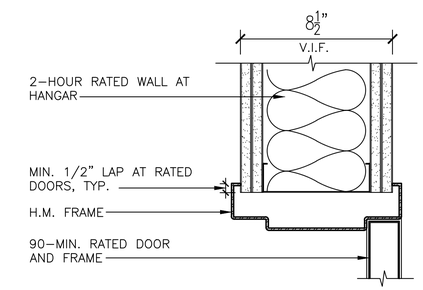

90 MIN. RATED DOOR JAMB

SCALE: 3" = 1'–0" (6/A5 A5)

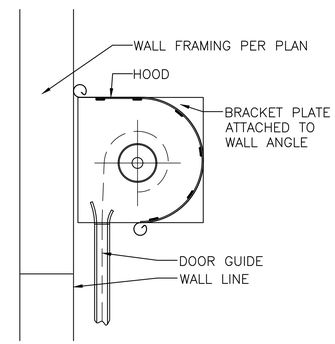

ROLL-UP DOOR HEAD

SCALE: N.T.S. (4/A5 A5)

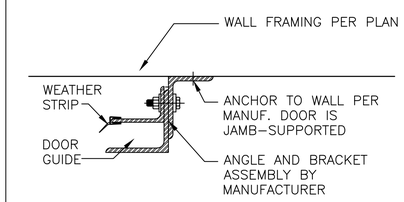

ROLL-UP DOOR JAMB

SCALE: N.T.S. (2/A5 A5)

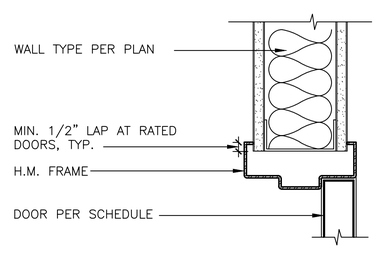

DOOR JAMB

SCALE: 3" = 1'–0" (7/A5 A5)

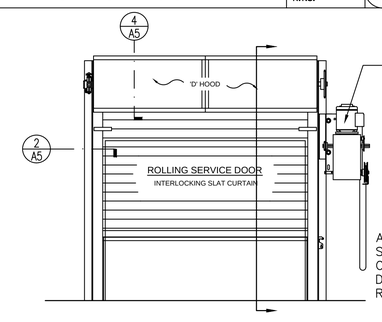

INTERIOR ELEVATION (COIL SIDE)

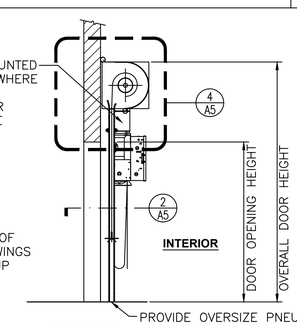

SECTION VIEW

PROVIDE OVERSIZE PNEUMATIC SILL SEAL TO STOP AFFF INTRUSION, INCLUDING, BUT NOT LIMITED TO, ANY FLUID INTRUSION SUCH AS WATER, FUEL, FIRE SUPPRESSION FOAM, ETC...

DOOR HEAD (JAMB SIM.)

SCALE: N.T.S. (3/A5 A5)

DEVELOPMENT ONE, INC.
1611 East Fourth Street, Suite 250
Santa Ana, California 92701
J.Bruce Camino, Architect, AIA, NCARB
(714) 689-0298
(714) 648-0197 FAX

DATE	SYM	REVISION	BY	A'PD
7/2/09	1	Palmdale Comments Amendment		
06–03–11	2	AS-BUILT		

NATIONAL AERONAUTICS AND SPACE ADMINISTRATION
DRYDEN FLIGHT RESEARCH CENTER
EDWARDS, CA

DRAWING TITLE
DOOR SCHEDULE AND DETAILS

PROJECT TITLE
CONSTRUCT MIRROR COATING FACILITY
DAOF BUILDING 703
100% FINAL DESIGN

APPROVALS	DATE
Chief, Facilities Engineering & Asset Mgmt. Office	
Project Manager	
Security Office	
Project Requestor	
Safety Office	
Telecom	

DRAWN BY	DRM	DATE STRTD	4–18–08
W.O. #		DATE PRNTD	7–13–09
PLOT SCALE		TRADE SH. No.	EDM–1685
CAD FILE NAME		A5	SHEET No. 8 of 40

06–03–11 AS-BUILT

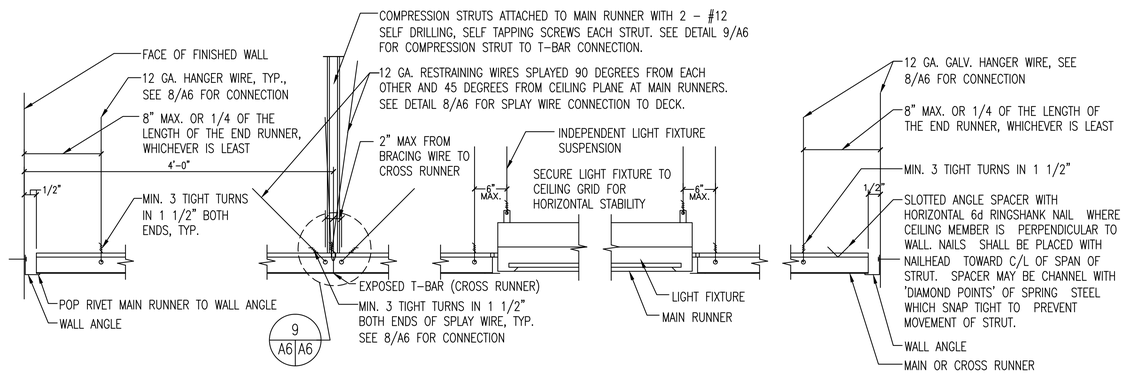

TYPICAL SUSPENDED CEILING DETAIL

SCALE: N.T.S. | 7 A4 A6

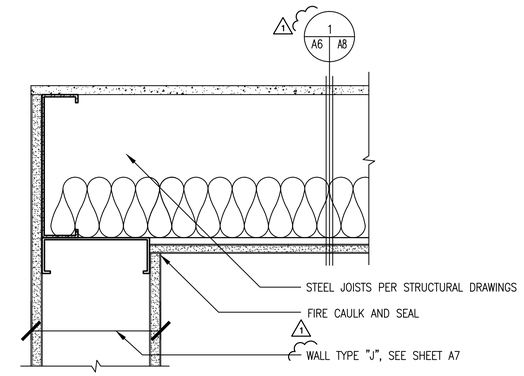

1-HR. WALL TO CEILING ASSEMBLY

SCALE: 3" = 1'-0" | 4 A4 A6

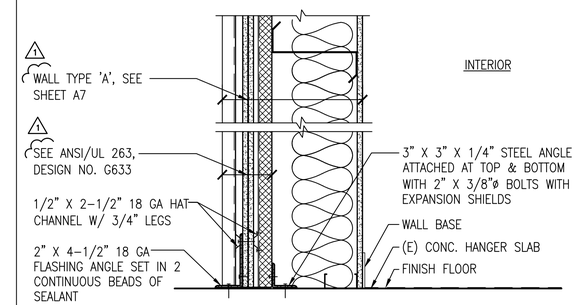

WALL SILL AT METAL BUILDING

SCALE: 1 1/2"=1'-0" | 1 A4 A6

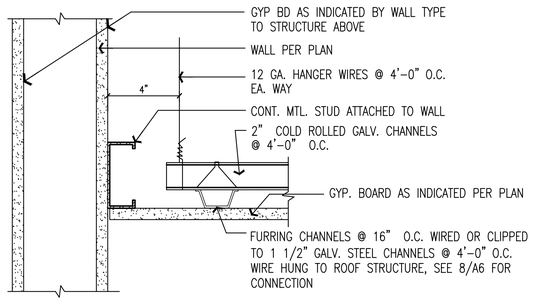

SUSPENDED GYP. BD. CEILING

SCALE: 3"=1'-0" | 10 A4 A6

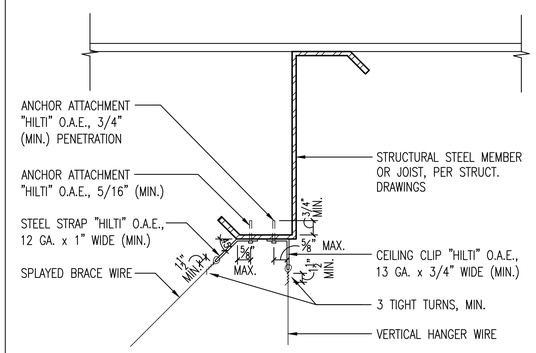

WIRE CONNECTION TO STRUCTURE

SCALE: 1"=1'-0" | 8 A6 A6

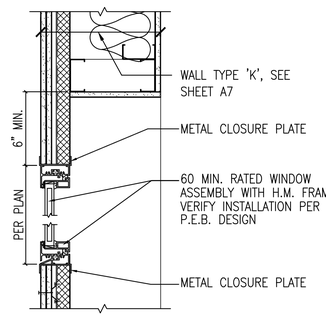

INTERIOR 60 MIN. WINDOW

SCALE: 3"=1'-0" | 5 A4 A6

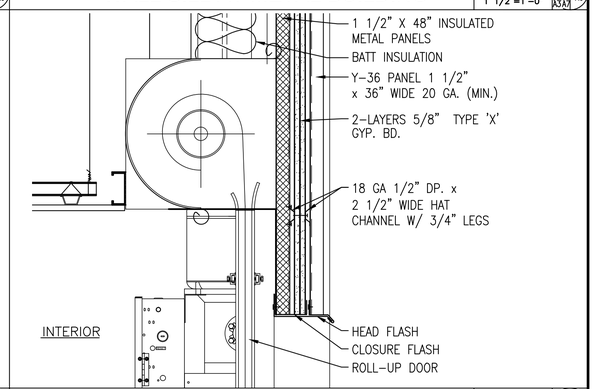

O.H. DOOR HEAD AT METAL BUILDING

SCALE: 1 1/2"=1'-0" | 2 A4 A6

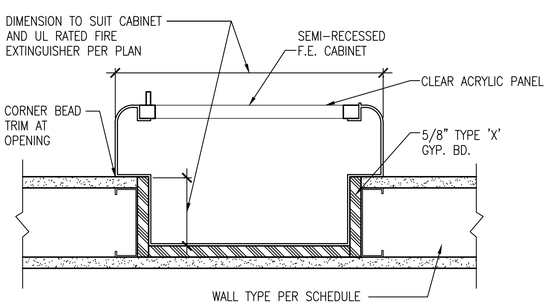

FIRE EXTINGUISHER CABINET

SCALE: 3"=1'-0" | 11 A1 A6

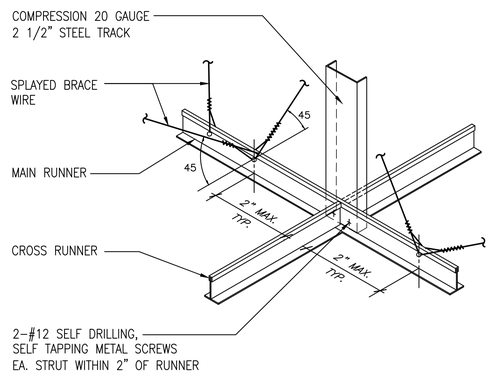

COMPRESSION STRUT TO T-BAR

SCALE: N.T.S. | 9 A6 A6

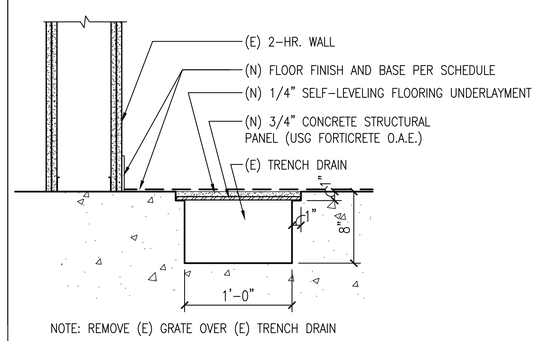

(E) TRENCH DETAIL

SCALE: 1 1/2"=1'-0" | 6 A4 A6

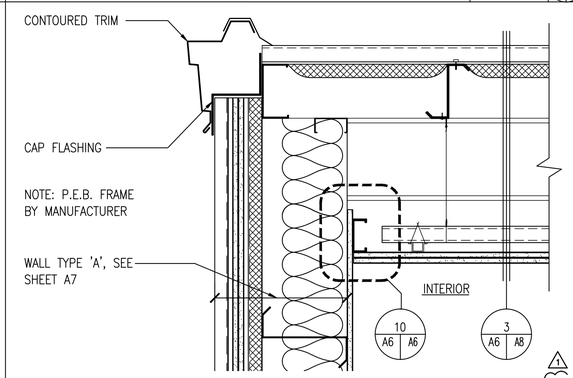

ROOF AT END WALL

SCALE: 1 1/2"=1'-0" | 3 A4 A6

DATE	SYM	REVISION	BY	A'PD
7/2/09	1	Palmdale Comments Amendment		
06-03-11	2	AS-BUILT		

DEVELOPMENT ONE, INC.
1611 East Fourth Street, Suite 250
Santa Ana, California 92701
J.Bruce Camino, Architect, AIA, NCARB
(714) 689-0298
(714) 648-0197 FAX

NATIONAL AERONAUTICS AND SPACE ADMINISTRATION
DRYDEN FLIGHT RESEARCH CENTER
EDWARDS, CA

DRAWING TITLE
DETAILS

PROJECT TITLE
CONSTRUCT MIRROR COATING FACILITY
DAOF BUILDING 703
100% FINAL DESIGN

APPROVALS	DATE
Chief, Facilities Engineering & Asset Mgmt. Office	
Project Manager	
Security Office	
Project Requestor	
Safety Office	
Telecom	

DRAWN BY	DRM	DATE STRTD	4-18-08
W.O. #		DATE PRNTD	7-13-09
PLOT SCALE / CAD FILE NAME	TRADE SH. No. A6	EDM-1685	
		SHEET No. 9 of 40	

06-03-11 AS-BUILT

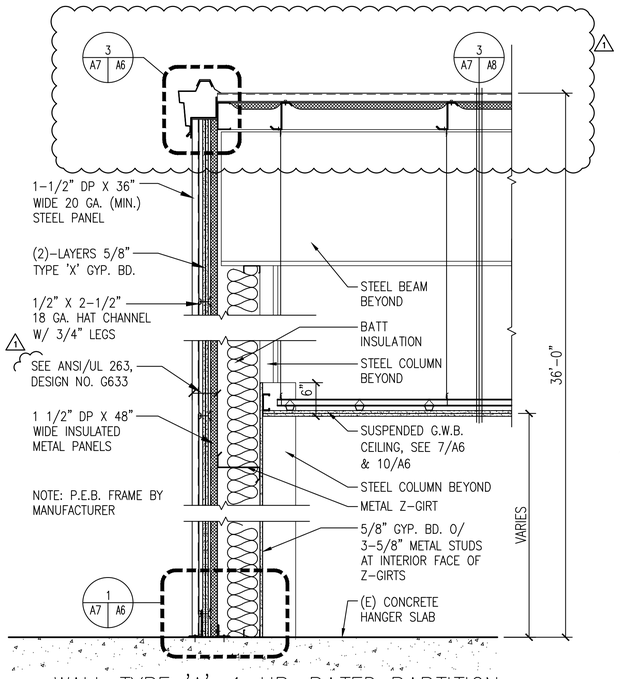

WALL TYPE 'A': 1-HR. RATED PARTITION

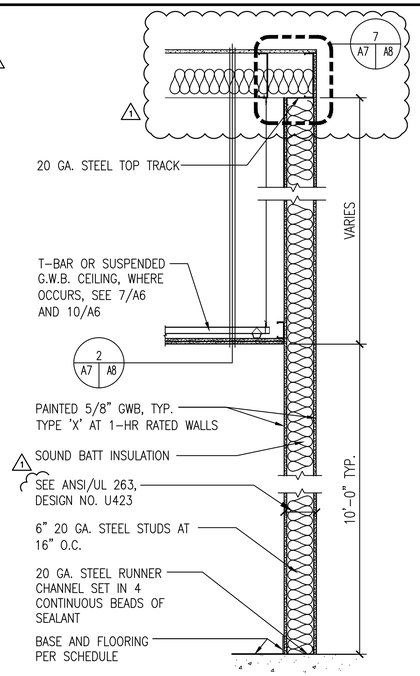

WALL TYPE 'C': 1-HR RATED PARTITION

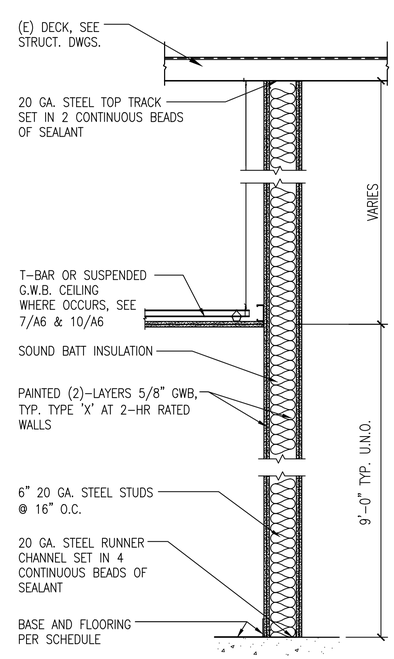

WALL TYPE 'D': EXISTING 2-HR RATED PARTITION

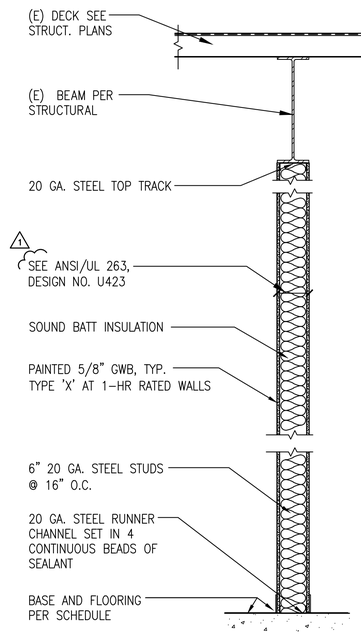

WALL TYPE 'E': 1-HR RATED PARTITION

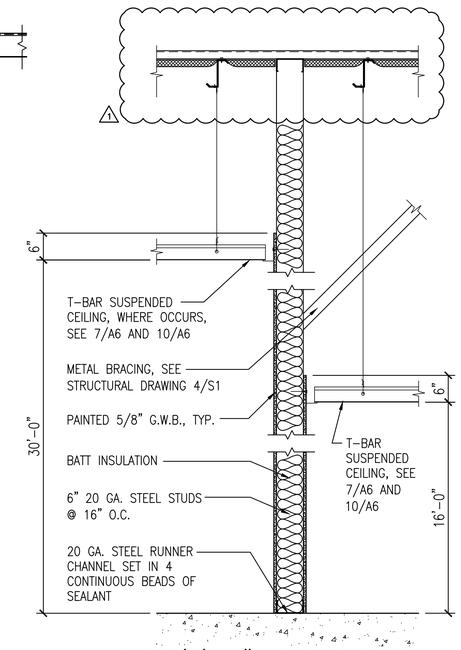

WALL TYPE 'F': 6" STUD PARTITION, NON-RATED

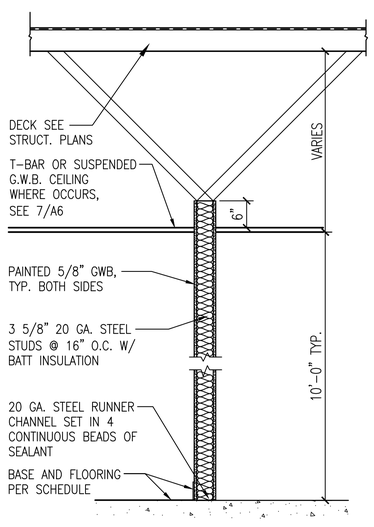

WALL TYPE 'G': 3-5/8" STUD PARTITION, NON-RATED

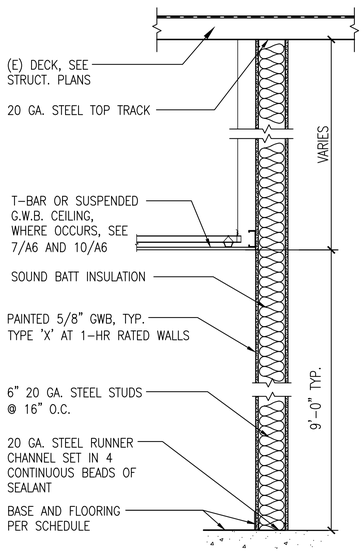

WALL TYPE 'H': (E) 1-HR RATED PARTITION

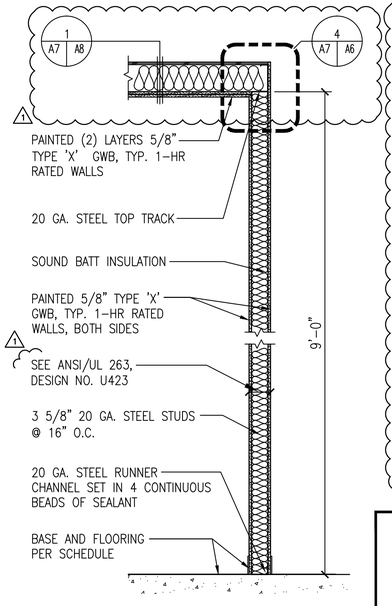

WALL TYPE 'J': 1-HR RATED PARTITION

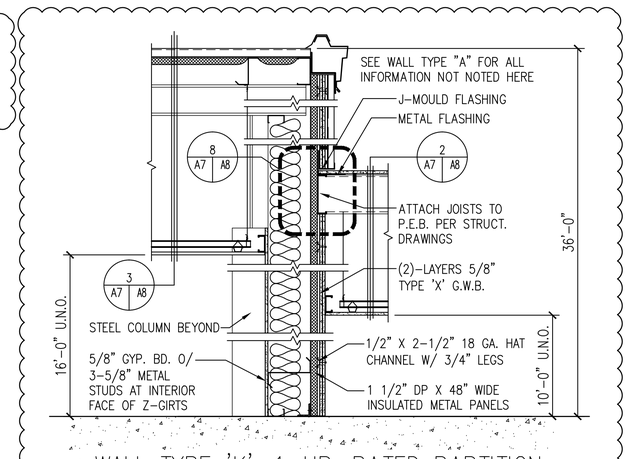

WALL TYPE 'K': 1-HR. RATED PARTITION

DEVELOPMENT ONE, INC.
1611 East Fourth Street, Suite 250
Santa Ana, California 92701
J.Bruce Camino, Architect, AIA, NCARB
(714) 689-0298
(714) 648-0197 FAX

DATE	SYM	REVISION	BY	A'PD
7/2/09	1	Palmdale Comments Amendment		
06-03-11	2	AS-BUILT		

NATIONAL AERONAUTICS AND SPACE ADMINISTRATION
DRYDEN FLIGHT RESEARCH CENTER
EDWARDS, CA

DRAWING TITLE
WALL TYPES

PROJECT TITLE
CONSTRUCT MIRROR COATING FACILITY
DAOF BUILDING 703
100% FINAL DESIGN

APPROVALS	DATE
Chief, Facilities Engineering & Asset Mgmt. Office	
Project Manager	
Security Office	
Project Requestor	
Safety Office	
Telecom	

DRAWN BY	DRM	DATE STRTD	4-18-08
W.O. #		DATE PRNTD	7-13-09
PLOT SCALE		TRADE SH. No.	EDM-1685
CAD FILE NAME		A7	SHEET No. 10 of 40

06-03-11 AS-BUILT

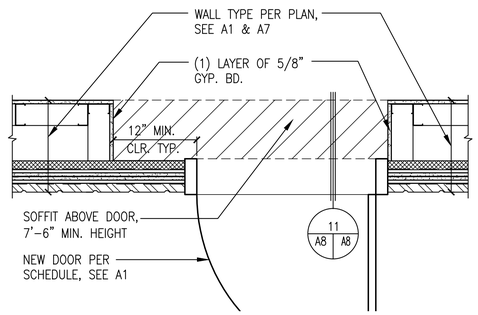

SOFFIT AT DOOR — 1 — 10 A1 A8

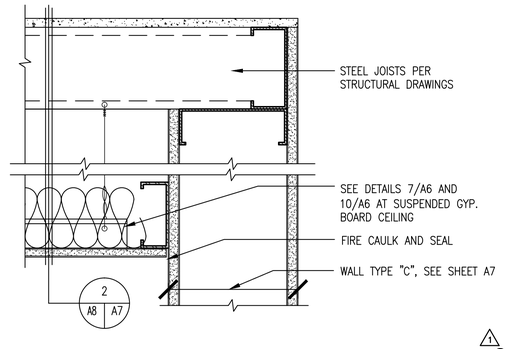

1-HOUR WALL TO CEILING ASSEMBLY — 1 — SCALE: 3" = 1'-0" — 7 A7 A8

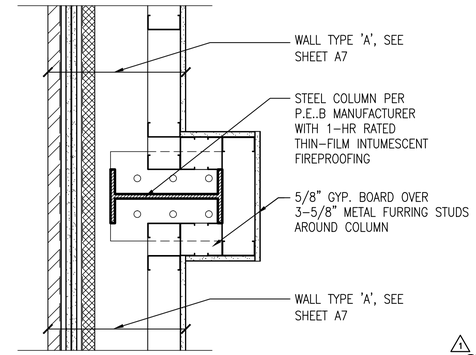

COLUMN FURRING — 1 — SCALE: 1 1/2"=1'-0" — 4 A1 A8

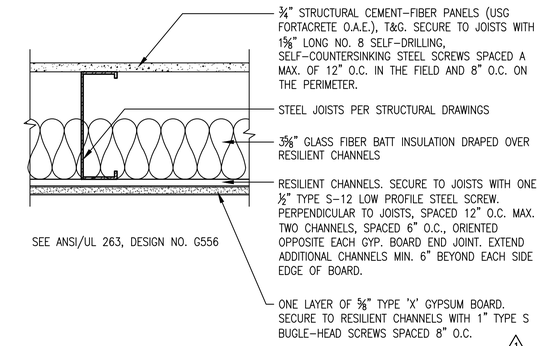

1-HOUR RATED CEILING ASSEMBLY — 1 — SCALE: 1 1/2"=1'-0" — 1 3,4,6 A6,A7 A8

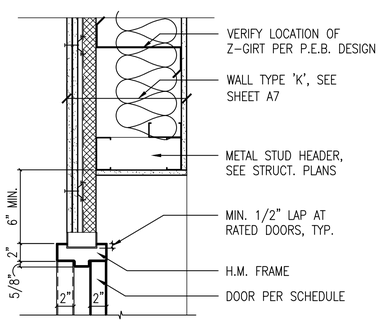

SOFFIT AT DOOR HEAD — 1 — 11 A8 A8

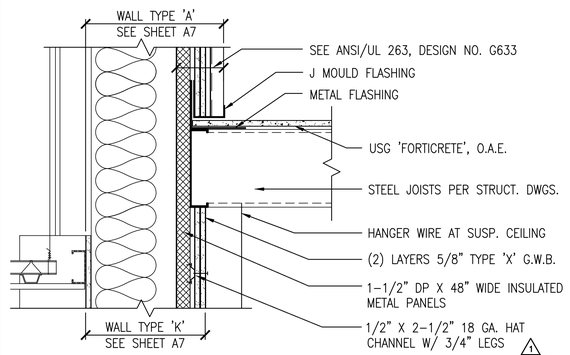

1-HOUR WALL TO CEILING ASSEMBLY — 1 — SCALE: 1 1/2"=1'-0" — 8 A8 A8

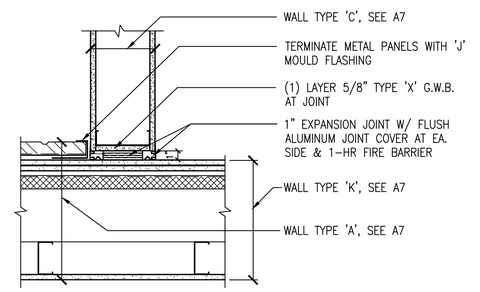

EXPANSION JOINT CONNECTION — 1 — SCALE: 1 1/2"=1'-0" — 5 A1 A8

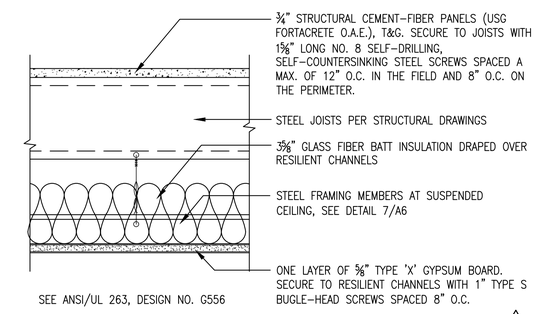

1-HOUR RATED CEILING ASSEMBLY — 1 — SCALE: 1 1/2"=1'-0" — 2 A6 A8

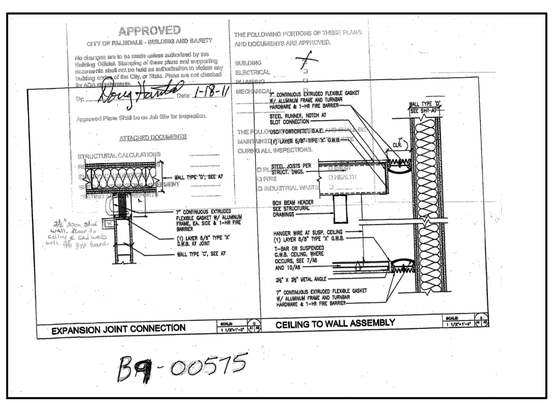

B9-00575

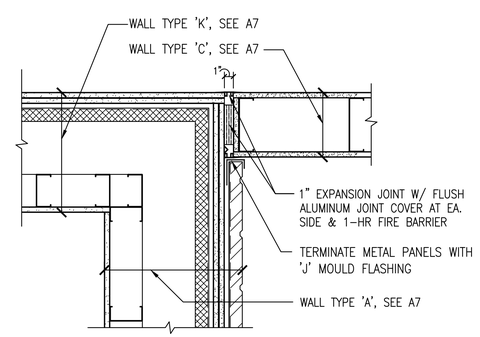

EXPANSION JOINT CONNECTION — 1 — SCALE: 1 1/2"=1'-0" — 6 A1 A8

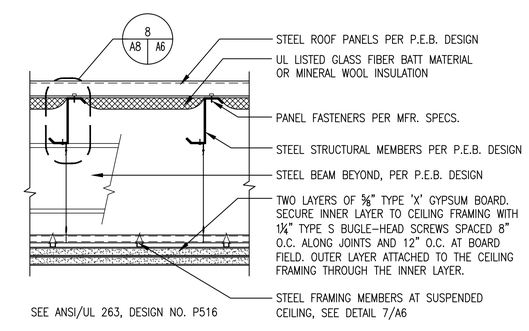

1-HOUR RATED CEILING ASSEMBLY — 1 — SCALE: 3"=1'-0" — 3 A6 A8

12 A8 A8 — 9 A8 A8

DEVELOPMENT ONE, INC.
1611 East Fourth Street, Suite 250
Santa Ana, California 92701
J.Bruce Camino, Architect, AIA, NCARB
(714) 689-0298
(714) 648-0197 FAX

DATE	SYM	REVISION	BY	A'PD
7/2/09	1	Palmdale Comments Amendment		
06-03-11	2	AS-BUILT		

NATIONAL AERONAUTICS AND SPACE ADMINISTRATION
DRYDEN FLIGHT RESEARCH CENTER
EDWARDS, CA

DRAWING TITLE
DETAILS

PROJECT TITLE
CONSTRUCT MIRROR COATING FACILITY
DAOF BUILDING 703
100% FINAL DESIGN

APPROVALS	DATE
Chief, Facilities Engineering & Asset Mgmt. Office	
Project Manager	
Security Office	
Project Requestor	
Safety Office	
Telecom	

DRAWN BY	DRM	DATE STRTD	4-18-08
W.O. #		DATE PRNTD	7-13-09
PLOT SCALE		TRADE SPL No.	EDM-1685
CAD FILE NAME		SHEET No.	10 of 40

06-03-11 AS-BUILT

GENERAL

1. THE GENERAL CONTRACTOR SHALL VERIFY ALL DIMENSIONS AND CONDITIONS AT THE JOB SITE, AND SHALL BE RESPONSIBLE FOR CONDITIONS OF ALL WORK AND MATERIALS INCLUDING THOSE FURNISHED BY SUB–CONTRACTORS. STRUCTURAL ENGINEER OF RECORD SHALL BE NOTIFIED IMMEDIATELY OF ANY DISCREPANCIES.
2. ALL MATERIALS AND WORKMANSHIP SHALL BE PERFORMED IN ACCORDANCE WITH 2007 CALIFORNIA BUILDING CODE.
3. ALL DIMENSIONS SHALL TAKE PRECEDENCE OVER SCALE SHOWN ON PLANS, SECTIONS AND DETAILS.
4. NOTES AND DETAILS ON THE DRAWINGS SHALL TAKE PRECEDENCE OVER GENERAL NOTES AND TYPICAL DETAILS.
5. WHERE NO DETAILS SHOWN OR NOTED ON THE DRAWINGS, THE DETAILS SHALL BE THE SAME AS FOR OTHER SIMILAR WORK.
6. OPENINGS, POCKETS, SLEEVES, ETC., SHALL NOT BE PLACED IN SLABS, BEAMS, WALLS, COLUMNS AND FOOTINGS UNLESS SPECIFICALLY DETAILED ON THE STRUCTURAL DRAWINGS.
7. CONSTRUCTION MATERIALS SHALL BE SPREAD OUT IF PLACED ON FRAMED FLOORS OR ROOF. LOADS SHALL NOT EXCEED DESIGN LIVE LOADS FOR EACH PARTICULAR LEVEL. PROVIDE ADEQUATE SHORING AND BRACING IF LOAD EXCEED DESIGN LIVE LOAD OR WHERE STRUCTURE HAS NOT ATTAINED DESIGN STRENGTH.
8. THIS SET OF DRAWINGS REPRESENT THE FINISHED STRUCTURE, METHOD OF CONSTRUCTION NOT NECESSARY INDICATED, THE CONTRACTOR SHALL PROVIDE ALL MEASURES NECESSARY TO PROTECT THE STRUCTURE, WORKERS AND OTHER PERSONS DURING CONSTRUCTION. SUCH MEASURES SHALL INCLUDE BUT NOT BE LIMITED TO BRACING, SHORING, SCAFFOLDING, ETC.

EPOXY ANCHORS

1. EPOXY FOR EPOXY ANCHORS SHALL BE SET–XP EPOXY BY "SIMPSON STRONG–TIE" (ICC ER ESR–2508)
2. ANCHORS USED FOR EPOXY ANCHORS SHALL BE CARBON STEEL CONFORMING TO ASTM A–307 THREADED RODS UNO. SIZE AND EMBEDMENT SHALL BE AS INDICATED ON PLANS.
3. ANCHORS SHALL BE INSTALLED IN ACCORDANCE WITH THE EPOXY MANUFACTURER'S RECOMMENDATIONS AND THE CURRENT ICBO REPORT.
4. SPECIAL INSPECTION SHALL BE PROVIDED IN ACCORDANCE WITH SECTION 1704.13 OF THE IBC AND IN ACCORDANCE WITH THE SPECIFIC SPECIAL INSPECTION REQUIREMENTS SET FORTH IN THE CORRESPONDING ICBO REPORT.
5. DRILLED HOLES SHALL BE CLEANED OF DUST AND ANY DEBRIS USING NYLON BRUSH AND COMPRESSED AIR. OIL, SCALE, AND RUST SHALL BE REMOVED FROM THREADED RODS PRIOR TO INSTALLATION.
6. UNLESS NOTED OTHERWISE IN THE PLANS, EPOXY ANCHORS SHALL HAVE THE FOLLOWING MINIMUM EMBEDMENT

BAR SIZE	MINIMUM EMBEDMENT *	REMARKS
#3	3 1/2"	
#4 OR 1/2"ø	4 1/4"	
#5 OR 5/8"ø	5 1/2"	
#6 OR 3/4"ø	6 3/4"	

* UNLESS NOTED OR DETAILED

PROJECT DESIGN CRITERIA

1. DESIGN BASED ON 2007 CBC AND ASCE 7–05.
2. DESIGN LOADS:
   1–HOUR RATED CEILING DL : 12 PSF
   LL : 20 PSF
   METAL FRAME BUILDING DL : 27 PSF
3. WIND LOADS: PRE–ENGINEERED METAL BUILDING IS INSIDE EXISTING HANGER WIND DESIGN IS NOT REQUIRED.
4. SEISMIC LOADS:
   SITE CLASS : D
   SEISMIC DESIGN CATAGORY : E
   Fa : 1.0
   Fv : 1.5
   SDs (FOR 0.2 SECOND) = 1.099 g
   SD_1 (FOR 0.1 SECOND) = 0.809 g
5. ADDITIONAL LOADS
   WEIGHT OF NEW MECHANICAL UNITS: AS SHOWN ON PLAN.

CONCRETE

1. ALL CONCRETE SHALL BE NORMAL WEIGHT CONFORMING TO THE FOLLOWING:

LOCATION	28–DAY MIN. COMPRESSIVE STRENGTH	MAXIMUM AGGREGATE SIZE (IN.)	MIX DESIGN SLUMP (INCHES)
A. MECHANICAL PAD	3500 PSI	1	4 (5" MAX)

* WITH CEMENT OF 5 1/2 SACKS.

2. ALL CONCRETE MIX DESIGN SHALL BE REVIEWED BY THE ENGINEER PRIOR TO CONSTRUCTION.
3. PORTLAND CEMENT SHALL CONFORM TO ASTM C–150, TYPE V CEMENT.
4. AGGREGATE SHALL CONFORM TO ASTM C–33.
5. WATER SHALL BE CLEAN, FREE FROM DELETERIOUS AMOUNTS OF ACIDS, ALKALIS OR ORGANIC MATERIALS, OILS, SALTS AS PER ACI 318.
6. CONCRETE MIXING OPERATIONS, ETC. SHALL CONFORM TO ASTM C–94. WATER–CEMENT RATIO IS LESS THAN 0.50
7. UNLESS SHOWN OR NOTED OTHERWISE, CONCRETE COVERAGE FOR REINFORCING BAR TO FACE OF BAR SHALL BE AS FOLLOWS:
   A. CONCRETE IN CONTACT WITH EARTH, UNFORMED 3"
   B. CONCRETE IN CONTACT WITH EARTH, FORMED 2"
   C. WALLS 1.5"
   D. BEAMS, GIRDERS & COLUMNS (TO TIES OR STIRRUPS) 1.5"
8. CONDUIT PLACED IN A CONCRETE SLAB SHALL NOT EXCEED 1/3 OF THE THICKNESS OF THE SLAB AND SHALL BE PLACED BETWEEN THE TOP AND BOTTOM REINFORCING STEEL. MINIMUM CLEAR DISTANCE BETWEEN CONDUITS SHALL BE 6".
9. CONSTRUCTION JOINTS:
   THE SURFACES OF ALL CONSTRUCTION JOINTS SHALL BE CLEAN, FREE FROM LOOSE DEBRIS. IMMEDIATELY BEFORE NEW CONCRETE IS PLACED, ALL CONSTRUCTION JOINTS SHALL BE WETTED AND STANDING WATER REMOVED.
10. CONCRETE SHALL BE CURED IN ACCORDANCE WITH SECT 1905.11 OF 2007 C.B.C.
11. REMOVAL OF CONCRETE FORMS AND SHORES SHALL BE IN ACCORDANCE WITH SECTION 1906.2 OF 2007 C.B.C.
12. CONDUITS AND PIPES EMBEDDED IN CONCRETE SHALL COMPLY WITH THE PROVISION OF SECTION 1906.3 OF 2007 C.B.C.
13. DESIGN AND CONSTRUCTION OF CONCRETE FORMWORK SHALL CONFORM TO ACI 347 "RECOMMENDED PRACTICE FOR CONCRETE FORMWORK".

REINFORCING STEEL

1. ALL REINFORCING BARS SHALL BE ASTM A–615 GRADE 60 DEFORMED BILLET STEEL BARS, EXCEPT NOTED BELOW:
   A. WELDED SMOOTH WIRE FABRIC SHALL CONFORM TO ASTM A–185.
2. GRADE 60 BARS SHALL BE MARKED SO ITS IDENTIFICATION CAN BE MADE WHEN THE FINAL IN PLACE INSPECTION IS MADE.
3. THE TIE WIRE USED SHALL BE BLACK ANNEALED WIRE, 16 GA. OR HEAVIER.
4. BAR SUPPORTS SHALL CONFORM TO THE BAR SUPPORT SPECIFICATIONS CONTAINED IN THE "MANUAL OF STANDARD PRACTICE" BY ACI.
5. A CERTIFIED COPY OF MILL TEST ON EACH HEAT OF REINFORCING STEEL DELIVERED SHOWING PHYSICAL AND CHEMICAL ANALYSIS SHALL BE PROVIDED UPON REQUEST AT THE TIME OF SHIPMENT.
6. ALL REQUIREMENT OF CONCRETE REINFORCEMENT NOT COVERED ON THE DRAWINGS SHALL BE IN ACCORDANCE WITH ACI "MANUAL OF STANDARD PRACTICE".
7. REINFORCING STEEL AT THE TIME OF THE CONCRETE IS PLACED SHALL BE FREE FROM MUD, OIL, OR OTHER NON METALLIC COATINGS THAT ADVERSELY AFFECT BONDING CAPACITY.
8. ALL HOOKS SHALL CONFORM TO THE BEND DIMENSION PER ACI "STANDARD HOOK" UNLESS OTHERWISE SHOWN ON THE DRAWINGS.
9. REINFORCING BARS SHALL NOT BE BENT OR STRAIGHTENED IN A MANNER THAT WILL INJURE THE MATERIAL.
10. REINFORCING BARS SHALL CONFORM ACCURATELY TO THE DIMENSIONS SHOWN ON THE DRAWINGS WITH THE FABRICATING TOLERANCES PER ACI "MANUAL OF STANDARD PRACTICE."
11. BARS SHALL BE SECURELY TIED TO PREVENT DISPLACEMENT DURING THE CONCRETE OPERATION AND ALL DOWELS SHALL BE WIRED IN PLACE BEFORE DEPOSITING CONCRETE.
12. SPLICES OF REINFORCEMENT SHALL HAVE 42 BAR DIAMETER LAP OR 2'–0" LAP MINIMUM.
13. DOWELS BETWEEN FOOTINGS AND WALLS OR COLUMNS SHALL HAVE SAME SIZE AS THE VERTICAL REINFORCEMENT, EMBEDMENT OF DOWELS SHALL BE 36 BAR DIAMETER OR 2'–0" MINIMUM UNLESS OTHERWISE SHOWN.
14. MINIMUM LAP OF MESH SHALL BE NOT LESS THAN THE SPACING OF THE CROSS WIRE PLUS TWO INCHES OR 60 DIA. OR 8 IN. WHICHEVER IS GREATER.

WELDING

1. ALL WELDING SHALL BE PERFORMED BY CERTIFIED WELDERS QUALIFIED AND CERTIFIED IN ACCORDANCE WITH THE QUALIFICATION PROCEDURE OF AWS.
2. ALL WELDING SHALL BE ACCOMPLISHED USING THE SHIELDED METAL ARC WELDING PROCESS (SMAW) WITH E70XX ELECTRODES OR THE SUBMERGED ARC WELDING PROCESS (SAW) WITH E7X–EXXX ELECTRODES OR THE FLUX–CORED ARC WELDING PROCESS (FCAW) WITH E71T–8 ELECTRODES (E70T–4 ELECTRODES ALLOWED FOR SHOP WELDING ONLY). LOW HYDROGEN ELECTRODES SHALL BE USED AND KEPT DRY, AND PARENT METALS SHALL BE PREHEATED IN ACCORDANCE WITH AWS STANDARDS.
3. ALL WELDING SHALL BE UNDER CONTINUOUS SPECIAL INSPECTION BY A REGISTERED SPECIAL INSPECTOR, EXCEPT WELDING DONE IN A BUILDING DEPARTMENT APPROVED FABRICATOR'S SHOP IN ACCORDANCE WITH 2007 CBC. WELDING INSPECTION MAY BE PERIODIC WHERE ALLOWED BY 2007 CBC. WELDING SHALL BE PERFORMED BY AWS CERTIFIED WELDERS. WELDERS SHALL HAVE LIGHT GAUGE STEEL CERTIFICATION WHEN WELDING LIGHT GAUGE STEEL.
4. FULL PENETRATION WELDED CONNECTIONS (100%) AT MOMENT FRAMES, BRACED FRAMES, AND ALL FULL PENETRATION FIELD WELDS SHALL HAVE ULTRASONIC TESTING FOR COMPLIANCE WITH CBC 2007, OF THE UNIFORM BUILDING CODE. ULTRASONIC TESTING SHALL BE PERFORMED BY AN INDEPENDENT TESTING AGENCY THAT HAS BEEN INSPECTED BY THE NATIONAL STANDARDS. TESTING INSPECTIONS SHALL BE QUALIFIED BY ASNT BUREAU OF RECOMMENDED PRACTICE SNT–TC–A1. PROVIDE SURFACE PREPARATION AND BACKUP PLATES AS REQUIRED PER AISC AND AWS.
5. WELDING OF REINFORCING BARS SHALL BE DONE USING E 90XX ELECTRODES AND SHALL BE DONE ON A 706 REINFORCING STEEL ONLY. THE A 706 TYPE REINFORCING BARS SHALL BE IDENTIFIED BY THE SPECIAL INSPECTOR PRIOR TO WELDING IN THE FIELD. WELDING OF REINFORCING BARS SHALL CONFORM WITH AWS D1.4.
6. WELD MATERIAL SHOULD BE ABLE TO ABSORB 20 "FOOT POUNDS" OF IMPACT AT MINUS TWENTY DEGREES FAHRENHEIT. FILLER METAL SHALL CONFORM TO THE FOLLOWING SPECIFICATIONS:
   SMAW – AWS A5.1 & A5.5
   SAW – AWS A5.17 & A5.23
   FCAW – AWS A5.29
7. ALL EXPOSED WELDS SHALL BE FILLED AND GROUND SMOOTH WHERE METAL COULD COME IN CONTACT WITH THE PUBLIC.
8. ALL WELDS SHOWN AS FULL PENETRATION (F.P.) SHALL BE FULLY DETAILED ON THE SHOP DRAWINGS.
9. WELDING PROCEDURES, WELDER QUALIFICATION REQUIREMENTS AND WELDING ELECTRODES FOR STRUCTURAL STEEL SHALL BE IN ACCORDANCE WITH REQUIREMENTS OF 2008 LACBC.
10. STEEL USED IN WELDING STRUCTURES SHALL CONFORM TO THE LIMITATIONS ON CHEMICAL PROPERTIES SPECIFIED IN THE LATEST EDITIONS OF AWS D1.1 AND D1.3 OF THE STRUCTURAL WELDING CODE – STEEL. PUBLISHED BY THE AMERICAN WELDING SOCIETY. NO WELDED SPLICES SHALL BE MADE EXCEPT THOSE SHOWN ON APPROVED PLAN.
11. THE WELDING OF REINFORCING STEEL, METAL, INSERTS AND CONNECTIONS IN REINFORCED CONCRETE CONSTRUCTION SHALL CONFORM TO CBC STANDARD NO. 19–1.

STRUCTURAL STEEL

1. ALL STRUCTURAL STEEL MATERIALS AND WORKMANSHIP SHALL BE IN ACCORDANCE WITH THE LATEST REVISED EDITION OF THE AISC MANUAL OF STEEL CONSTRUCTION, WHICH INCLUDES THE SPECIFICATION FOR STRUCTURAL STEEL BUILDINGS, THE CODE OF STANDARD PRACTICE AND THE AWS STRUCTURAL WELDING CODE. IDENTIFY AND MARK STEEL PER 2007 CBC
2. STRUCTURAL STEEL SHALL CONFORM TO THE FOLLOWING:
   MATERIAL SPECIFICATIONS:
   ANGLE SHAPES
   ASTM A36
   BARS AND PLATES
   ASTM A36
   MACHINE BOLTS
   ASTM A307
   ANCHOR BOLTS AND PINS
   ASTM A307
3. FABRICATORS SHALL FURNISH SHOP DRAWINGS FOR REVIEW BY THE STRUCTURAL ENGINEER PRIOR TO FABRICATION OF STRUCTURAL MEMBERS.
4. NO HOLES OTHER THAN THOSE SPECIFICALLY DETAILED SHALL BE ALLOWED THRU STRUCTURAL STEEL MEMBERS. BOLT HOLES SHALL CONFORM TO AISC SPECIFICATION, AND SHALL BE STANDARD HOLES UNLESS OTHERWISE NOTED. NO CUTTING OR BURNING OF STRUCTURAL STEEL WILL BE PERMITTED WITHOUT PRIOR CONSENT OF THE ENGINEER.
5. ALL CONNECTIONS NOT DETAILED ON THE PLANS SHALL BE DETAILED BY THE STEEL FABRICATOR AND SHALL BE SHOWN ON THE SHOP DRAWINGS SUBMITTED TO THE ENGINEER FOR REVIEW.
6. ALL STRUCTURAL STEEL SHAPES SHALL BE PRIMED WITH A RUST RESISTANT PRIMER BEFORE SHIPMENT TO THE PROJECT SITE.
7. AFTER ERECTION IS COMPLETE, TOUCH–UP ALL SHOP PRIMING COATS DAMAGED DURING TRANSPORTATION AND ERECTION.
8. ALL SHOP AND FIELD BOLTED CONNECTIONS SHALL BE IN ACCORDANCE WITH ASTM A–307 USING UNFINISHED AMERICAN STANDARD REGULAR BOLTS, UNLESS OTHERWISE NOTED.
9. ALL STRUCTURAL STEEL EXPOSED TO EARTH SHALL HAVE 3" CONCRETE COVER.
10. STEEL FABRICATORS SHALL BE CERTIFIED PER 2007 CBC.

ABBREVIATIONS

(E)	EXISTING
(N)	NEW
PEB	PRE–ENGINEERED BUILDING
O.C.	ON CENTRAL
SIM.	SIMILER
TYP.	TYPICAL

SYMBOL LEGENDS

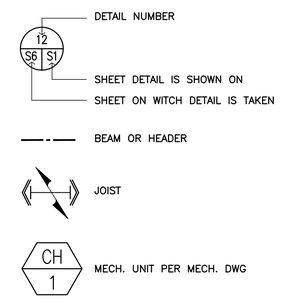

AQX ENGINEERING INC.
1520 Brookhollow, Suite 45
Santa Ana, CA 92705
OFF. (714) 662-0510
FAX. (714) 662-0559
www.aqxengineering.com

DATE	SYM	REVISION	BY	A'PD
7/2/09	1	Palmdale Comments Amendment		
08-03-11	△	AS-BUILT		

NATIONAL AERONAUTICS AND SPACE ADMINISTRATION
DRYDEN FLIGHT RESEARCH CENTER
EDWARDS, CA

DRAWING TITLE
GENERAL NOTES

PROJECT TITLE
CONSTRUCT MIRROR COATING FACILITY
DAOF BUILDING 703
100% FINAL DESIGN

APPROVALS	DATE
Chief, Facilities Engineering & Asset Mgmt. Office	
Project Manager	
Security Office	
Project Requestor	
Safety Office	
Telecom	

DRAWN BY	KZ	DATE STRTD	4–18–08
W.O. #	2009–612	DATE PRNTD	4–14–09
PLOT SCALE		TRADE SH. No.	EDM–1685
CAD FILE NAME		SN1	SHEET No. 11 of 40

AS-BUILT

SPECIAL INSPECTION PROGRAM AND STRUCTURAL TEST

1. THIS SECTION APPLIES TO THE STRUCTURAL PORTIONS OF THE PROJECT REQUIRING SPECIAL INSPECTION. THE SPECIAL INSPECTOR'S DUTIES ARE AS DESCRIBED IN CBC 1701.1 AND CBC 1704.4. COPIES OF TEST RESULTS AND FINAL REPORTS SHALL BE FURNISHED TO THE ENGINEER IN ADDITION TO OTHER NORMAL DISTRIBUTIONS WITHIN ONE WEEK OF THE TEST OR INSPECTION.

2. ALL TEST AND INSPECTIONS SHALL BE PERFORMED BY AN INDEPENDENT TESTING AND INSPECTION AGENCY EMPLOYED BY THE OWNER OR THE ENGINEER OR THE ARCHITECT AND NOT THE CONTRACTOR PER CBC SECTION 106.3.5. JOB SITE VISITS BY THE STRUCTURAL ENGINEER DO NOT CONSTITUTE A SPECIAL INSPECTION.
(NOTE: FOUNDATIONS INSPECTIONS LISTED BELOW SHALL BE PROVIDED BY THE GEOTECHNICAL ENGINEER).

3. THE CONTRACTOR SHALL BE RESPONSIBLE FOR PROVIDING THE TEST AND INSPECTION FIRM WITH A SCHEDULE TO FACILITATE THE PROPER COORDINATION OF WORK.

4. IN ADDITION TO THE REQUIRED INSPECTIONS, THE FOLLOWING CHECKED ITEMS WILL REQUIRE SPECIAL INSPECTION IN ACCORDANCE WITH SECTION 1704.5 OF THE CALIFORNIA BUILDING CODE.

ITEM	REQ'D. IF CHECKED	REMARKS
GRADING AND SOILS COMPLIANCE PRIOR TO FOUNDATION INSPECTION SEE FOUNDATION THIS SHEET.	●	TO BE PROVIDED BY THE GEOTECHNICAL ENGINEER
DURING THE TAKING OF TEST SPECIMENS AND PLACING OF ALL REINFORCED CONCRETE, WITH THE EXCEPTION OF FOUNDATION CONCRETE WHEN THE STRUCTURAL DESIGN STRENGTH IS NO GREATER THAN F'C = 2500 PSI. U.N.O.	●	MECH. PAD DOES NOT REQUIRE SPECIAL INSPECTION
DURING PLACING OF AND STRESSING OF PT TENDONS		
ALL STRUCTURAL FIELD WELDING, INCLUDING WELDING OF STRUCTURAL STEEL, REINFORCING STEEL, AND STEEL DECKING.		
INSTALLATION AND TIGHTENING OPERATIONS FOR ALL HIGH-STRENGTH FRICTION BOLTING (A325F) AND (A490F). INSTALLATION AND TIGHTENING OPERATIONS FOR HIGH-STRENGTH ANCHOR BOLTS.		
DURING INSTALLATION OF EPOXY AND/OR EXPANSION ANCHORS.	●	
DURING THE PLACEMENT OF AND TAKING OF TEXT SPECIMENS FOR ALL MASONRY UNLESS SPECIFICALLY INDICATED AS NOT REQUIRING SPECIAL INSPECTION.	●	
DURING PLACING OF REINFORCING STEEL.		
ANCHOR BOLTS IN CONCRETE AND/OR MASONRY.	●	

5. APPROVED FABRICATORS: (MUST SUBMIT CERTIFICATE OF COMPLIANCE) FOR ALL OFFSITE FABRICATION SUCH AS STRUCTURAL STEEL ETC.

6. ALL STRUCTURAL CONCRETE SHALL BE TESTED IN ACCORDANCE WITH CBC SECTION 1905.6. RESULTS OF TESTS SHALL BE SUBMITTED BY THE TESTING AGENCY TO THE ENGINEER FOR REVIEW. WHERE STRENGTH TEST RESULTS INDICATE A STRENGTH LOWER THAN THE SPECIFIED COMPRESSIVE STRENGTH, FURTHER INVESTIGATION SHALL BE MADE PER CBC SECTION 1905.6.4 AT THE EXPENSE OF THE CONTRACTOR.

LIGHT GAUGE COLD FORMED STEEL

1.0 DESCRIPTION

1.1 ALL MEMBER DESIGNATIONS HAVE BEEN PER ICBO REPORT #ER4943P BY STEEL STUD MANUFACTURERS ASSOCIATION (SSMA), AS ILLUSTRATED AS FOLLOWS :

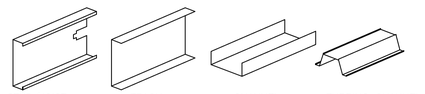

C-STUD/JOIST S-SECTIONS | TRACK T-SECTIONS | CHANNEL U-SECTIONS | FURRING CHANNEL F-SECTIONS

i.e.

SECTION : 350S162-54
350: MEMBER DEPTH (3.5" = 350 X 1/100 INCHES)
S: STYLE (S = STUD OR JOIST SECTION)
162: FLANGE WIDTH (1 5/8" = 1.625 IN = 162 X 1/100 INCHES)
54: MATERIAL THICKNESS (0.054 IN = 54 MIL)

1.3 DESIGN SHOWN IN THIS SET OF DRAWINGS HAS BEEN DONE PER DIVISION VII OF CHAPTER 22 OF CALIFORNIA BUILDING CODE, 2007.

1.4 SCOPE OF WORK: PROVIDE METAL STUDS AND/OR JOISTS AND ACCESSORIES AS INDICATED ON THE DRAWINGS, AS SPECIFIED HEREIN, AND AS NEEDED FOR A COMPLETE AND PROPER INSTALLATION.

1.5 RELATED WORK SPECIFIED ELSEWHERE.

2.0 QUALITY ASSURANCE

2.1 INSPECTION AND QUALITY CONTROL

A. CONTRACTOR SHALL PROVIDE EFFECTIVE FULL TIME QUALITY CONTROL OVER ALL FABRICATION AND ERECTION ACTIVITIES.

B. AS REQUIRED BY THE BUILDING OFFICIAL, OWNER'S TESTING AGENCY MAY INSPECT THE MAINTENANCE OF A QUALITY CONTROL PROGRAM INCLUDING SPOT CHECKING WELDMENTS AND WELDING PROCEDURES ACCORDANCE WITH A.W.S STANDARDS.

C. STEEL FRAMING MANUFACTURER SHALL PROVIDE A QUALIFIED REPRESENTATIVE FOR PERIODIC ON-SITE REVIEW OF FABRICATION AND INSTALLATION IN ACCORDANCE WITH MANUFACTURERS RECOMMENDATIONS.

D. INSPECTION BY OWNER'S TESTING AGENCY IS NOT INTENDED TO BE COMPREHENSIVE OR COMPLETE.
FULL RESPONSIBILITY FOR QUALITY CONTROL SHALL REMAIN WITH CONTRACTOR.

E. USE ADEQUATE NUMBERS OF SKILLED WORKMEN WHO ARE THOROUGHLY TRAINED AND EXPERIENCED IN THE NECESSARY CRAFTS AND WHO ARE COMPLETELY FAMILIAR THE SPECIFIED REQUIREMENTS AND THE METHODS NEEDED FOR PROPER PERFORMANCE OF THE WORK OF THIS SECTION.

2.2 STANDARDS

A. WORK SHALL MEET THE REQUIREMENTS OF THE FOLLOWING STANDARDS.

1. AMERICAN IRON AND STEEL INSTITUTE (A.I.S.I.) SPECIFICATION FOR THE DESIGN OF COLD FORMED STEEL STRUCTURAL MEMBERS, LATEST EDITION.

2. AMERICAN WELDING SOCIETY (A.W.S.): STRUCTURAL WELDING CODE – SHEET STEEL, LATEST EDITION.

3. AMERICAN SOCIETY FOR TESTING AND MATERIALS (A.S.T.M.)

4. AMERICAN INSTITUTE OF STEEL CONSTRUCTION (A.I.S.C.) MANUAL OF STEEL CONSTRUCTION, 13TH EDITION.

5. CALIFORNIA BUILDING CODE (C.B.C.) – 2007 EDITION

6. ALL PERTINENT FEDERAL, STATE AND LOCAL CODES.

B. THE MOST STRINGENT REQUIREMENTS SHALL GOVERN IN CONFLICTS BETWEEN SPECIFIED CODES AND STANDARDS.

3.0 SUBMITTALS

NONE

4.0 PRODUCT HANDLING

4.1 DELIVERY AND STORAGE

PROTECT METAL FRAMING UNITS FROM RUSTING AND DAMAGE. DELIVER TO PROJECT SITE IN MANUFACTURER'S UNOPENED CONTAINERS OR BUNDLES, FULL IDENTIFIED WITH NAME, BRAND, TYPE AND GRADE STORE OFF GROUND IN A DRY VENTILATED SPACE OR PROTECT WITH SUITABLE WATERPROOF COVERINGS.

5.0 MANUFACTURERS

5.1 ALL FRAMING MEMBERS SHALL BE MANUFACTURED AND SUPPLIED OF THE SAME TYPE AND SIZE AS SHOWN ON THE PLANS, OR PRE-APPROVED EQUIVALENT MEMBERS.

6.0 MATERIALS

6.1 PAINTED MATERIALS

A. ALL PAINTED 54 MIL OR HEAVIER MATERIALS SHALL BE FORMED FROM STEEL THAT CORRESPONDS TO THE REQUIREMENTS OF ASTM A-570 GRADE 50 OR ASTM A-607 GRADE 50, WITH A MINIMUM YIELD OF 50,000 PSI.

B. ALL PAINTED 43 MIL OR MATERIALS SHALL BE FORMED FROM STEEL THAT CORRESPONDS TO THE REQUIREMENTS OF ASTM A-611, GRADE C, OR ASTM A-570, GRADE C, WITH MINIMUM YIELD OF 33,000 PSI.

C. ALL PAINTED MATERIAL AND ACCESSORIES SHALL BE PRIMED WITH RUST INHIBITIVE PAINT MEETING THE PERFORMANCE REQUIREMENTS OF TT-P-636C.

6.2 GALVANIZED MATERIAL

A. ALL GALVANIZED 54 MIL OR HEAVIER MATERIALS SHALL BE FORMED STEEL WITH A MINIMUM YIELD OF 50,000 PSI. & ULTIMATE OF 65,000 PSI.

B. ALL GALVANIZED 43 MIL AND LIGHTER MATERIALS SHALL BE FORMED STEEL WITH A MINIMUM YIELD OF 33,000 PSI. & ULTIMATE OF 45,000 PSI.

C. ALL GALVANIZED MATERIALS SHALL BE FORMED FROM STEEL HAVING A G-60 GALVANIZED COATING MEETING THE REQUIREMENTS OF ASTM A-525.

6.3 ALL LIGHT GAGE BASE MATERIAL SHALL HAVE THE MINIMUM THICKNESS AS INDICATED BELOW:

97 MIL – 0.0966"	33 MIL – 0.0329"
68 MIL – 0.0677"	27 MIL – 0.0269"
54 MIL – 0.0538"	18 MIL – 0.0179"
43 MIL – 0.0428"	

6.4 ALL WELDING RODS ARE TO CONFORM TO THE FOLLOWING:

FOR WELDING 43 MIL AND LIGHTER MEMBERS – E60XX
FOR WELDING 54 MIL AND HEAVIER MEMBERS – E70XX

ALL WELDING TO BE PERFORMED BY CERTIFIED LIGHT GAGE WELDERS. ALL WELDS SHALL BE TOUCHED-UP WITH A ZINC-RICH PAINT FOR GALVANIZED MATERIALS OR SHALL BE COVERED WITH SHALL BE COVERED WITH THE COMPATIBLE PAINT FOR PAINTED MEMBER.

6.5 U.N.O., ALL SCREWS SHALL BE PER GRABER OR COMPASS INTERNATIONAL OR EQUAL, AND ALL 0.100" DIAMETER PINS SHALL BE PER ERICO TOOLS & FASTENERS OR EQUAL. REFER TO TYPICAL DETAILS FOR POINT STYLE, EDGE DISTANCE, AND SPACING REQUIREMENTS.

AQX ENGINEERING INC.
1520 Brookhollow, Suite 45
Santa Ana, CA 92705
OFF. (714) 662-0510
FAX. (714) 662-0559
www.aqxengineering.com

DATE	SYM	REVISION	BY	A'PD
7/2/09	1	Palmdale Comments Amendment		
10-6-09	2	AS-BUILT		

NATIONAL AERONAUTICS AND SPACE ADMINISTRATION
DRYDEN FLIGHT RESEARCH CENTER
EDWARDS, CA

DRAWING TITLE
GENERAL NOTES

PROJECT TITLE
CONSTRUCT MIRROR COATING FACILITY
DAOF BUILDING 703
100% FINAL DESIGN

APPROVALS	DATE
Chief, Facilities Engineering & Asset Mgmt. Office	
Project Manager	
Security Office	
Project Requestor	
Safety Office	
Telecom	

DRAWN BY	KZ	DATE STRTD	4-18-08
W.O. #	2009-612	DATE PRNTD	4-14-09
PLOT SCALE		TRADE SH. No.	EDM-1685
CAD FILE NAME		SN2	SHEET No. 12 of 40

AS-BUILT

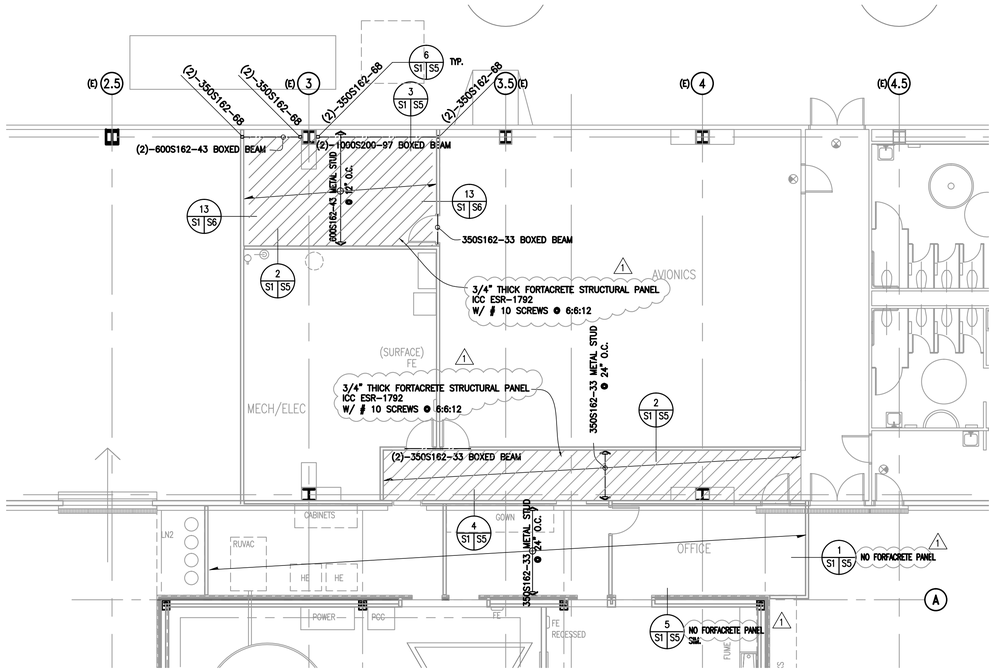

FRAMING PLAN AT 1-HOUR RATED CEILING

SCALE: 1/8" = 1'-0" (3 | S1 | S1)

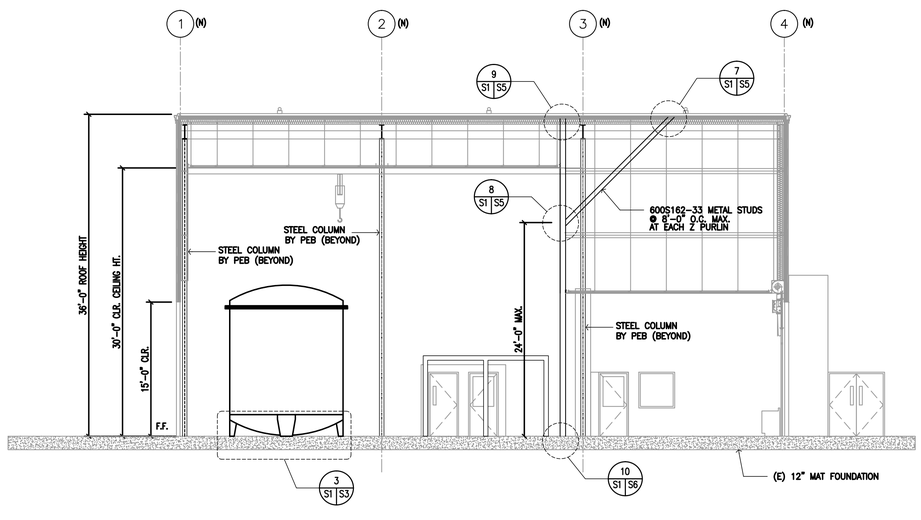

SECTION

SCALE: 1/8" = 1'-0" (4 | S1 | S1)

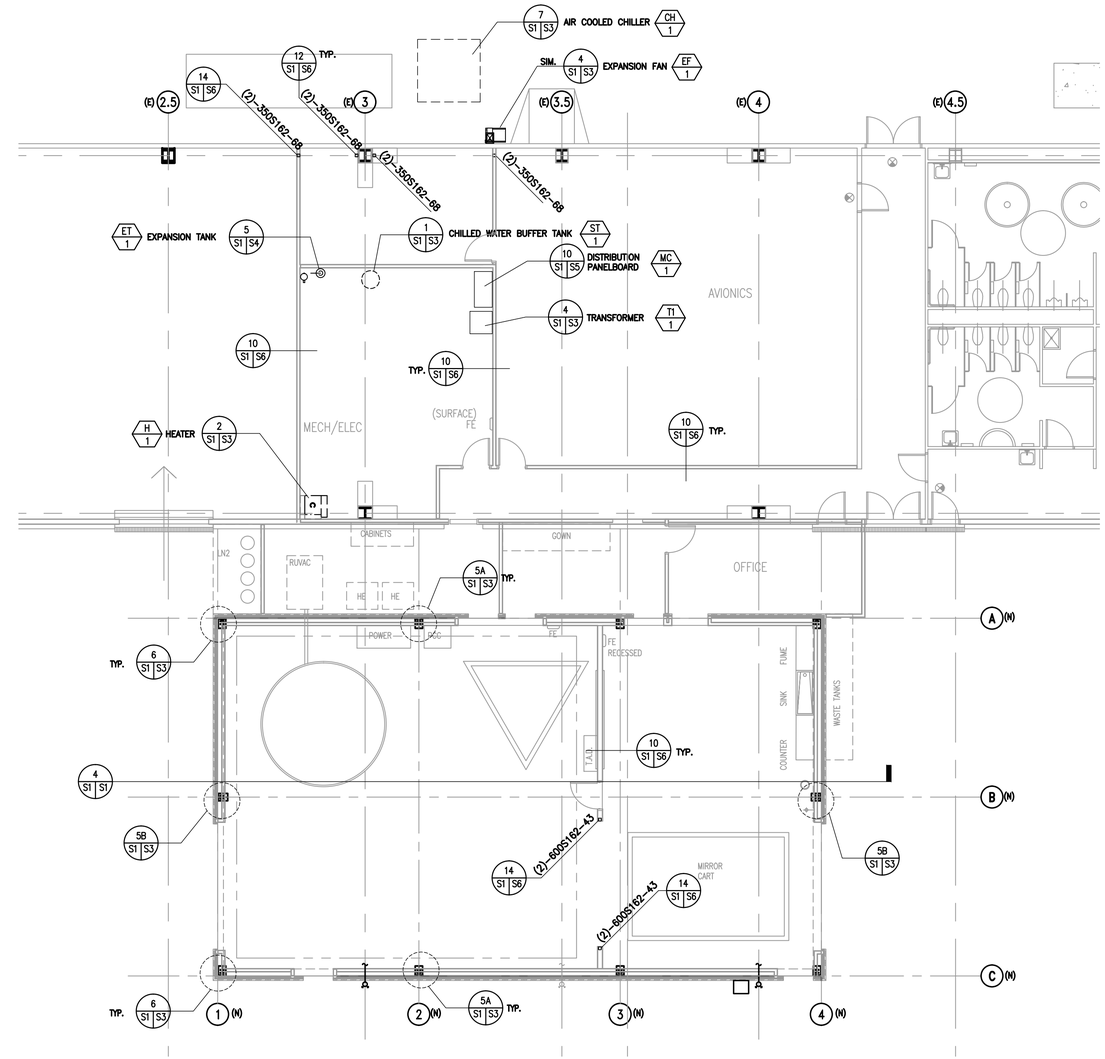

PLAN NOTES:

1. CONTRACTOR SHALL VERIFY (E) 12" THICK MAT FOUNDATION.
2. CONTRACTOR SHALL ACCURATELY LOCATE ALL EXISTING REINFORCING BY X-RAY OR EQUIVALENT METHODS. NO REBAR SHALL BE CUT DURING INSTALLATION OF ANCHOR BOLTS. ALL EXPENSES RELATED TO REPAIR OF CUT REBAR OR TENDONS SHALL BE ENTIRELY AT THE EXPENSE OF THE CONTRACTOR.
3. CONTRACTOR SHALL VERIFY LOCATIONS OF MECHANICAL UNITS WITH/ MECH./ELEC. DRAWINGS.

FOUNDATION PLAN

SCALE: 1/8" = 1'-0" (1 | S1 | S1)

AQX ENGINEERING INC.
1520 Brookhollow, Suite 45
Santa Ana, CA 92705
OFF. (714) 662-0510
FAX. (714) 662-0559
www.aqxengineering.com

DATE	SYM	REVISION	BY	A'PD
7/2/09	1	Palmdale Comments Amendment		
(-)-(-)-(-)		AS-BUILT		

NATIONAL AERONAUTICS AND SPACE ADMINISTRATION
DRYDEN FLIGHT RESEARCH CENTER
EDWARDS, CA

DRAWING TITLE
KEY PLAN, PLAN VIEW, SECTION AND DETAILS

PROJECT TITLE
CONSTRUCT MIRROR COATING FACILITY
DAOF BUILDING 703
100% FINAL DESIGN

APPROVALS	DATE
Chief, Facilities Engineering & Asset Mgmt. Office	
Project Manager	
Security Office	
Project Requestor	
Safety Office	
Telecom	

DRAWN BY	KZ	DATE STRTD	4-18-08
W.O. #	2009-612	DATE PRNTD	4-14-09
PLOT SCALE		TRADE SH. No.	S1
CAD FILE NAME		EDM-1685	
		SHEET No. 13 of 40	

AS-BUILT

(-)-(-)-(-)

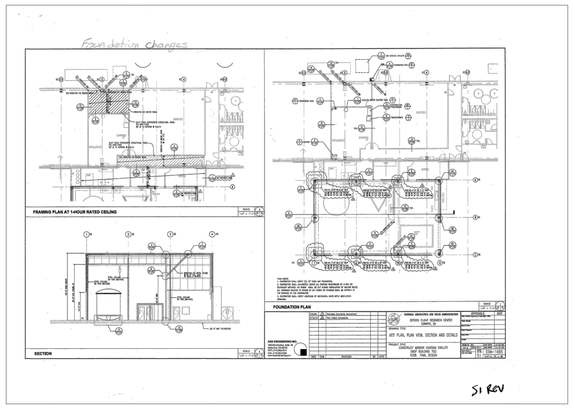

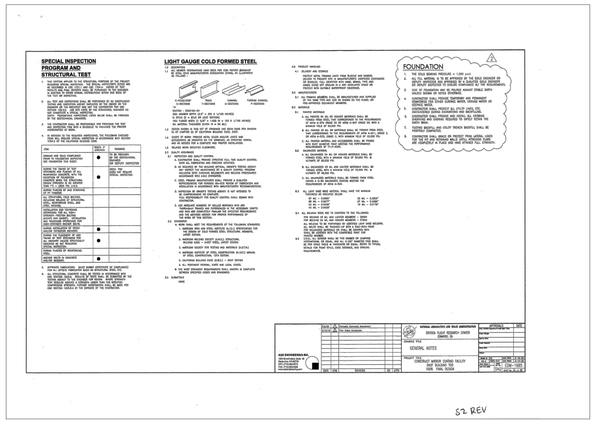

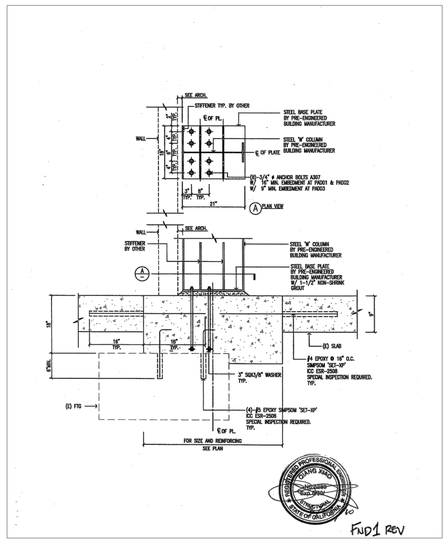

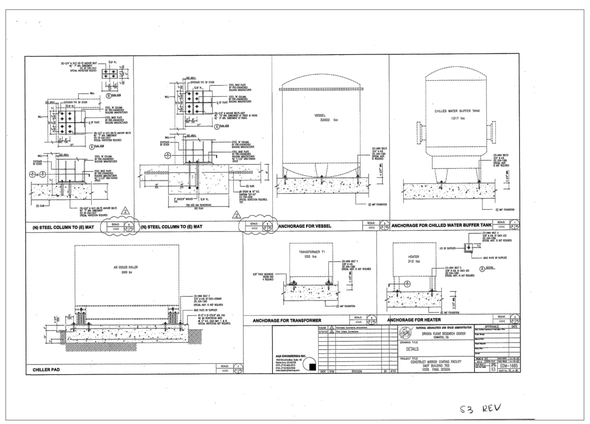

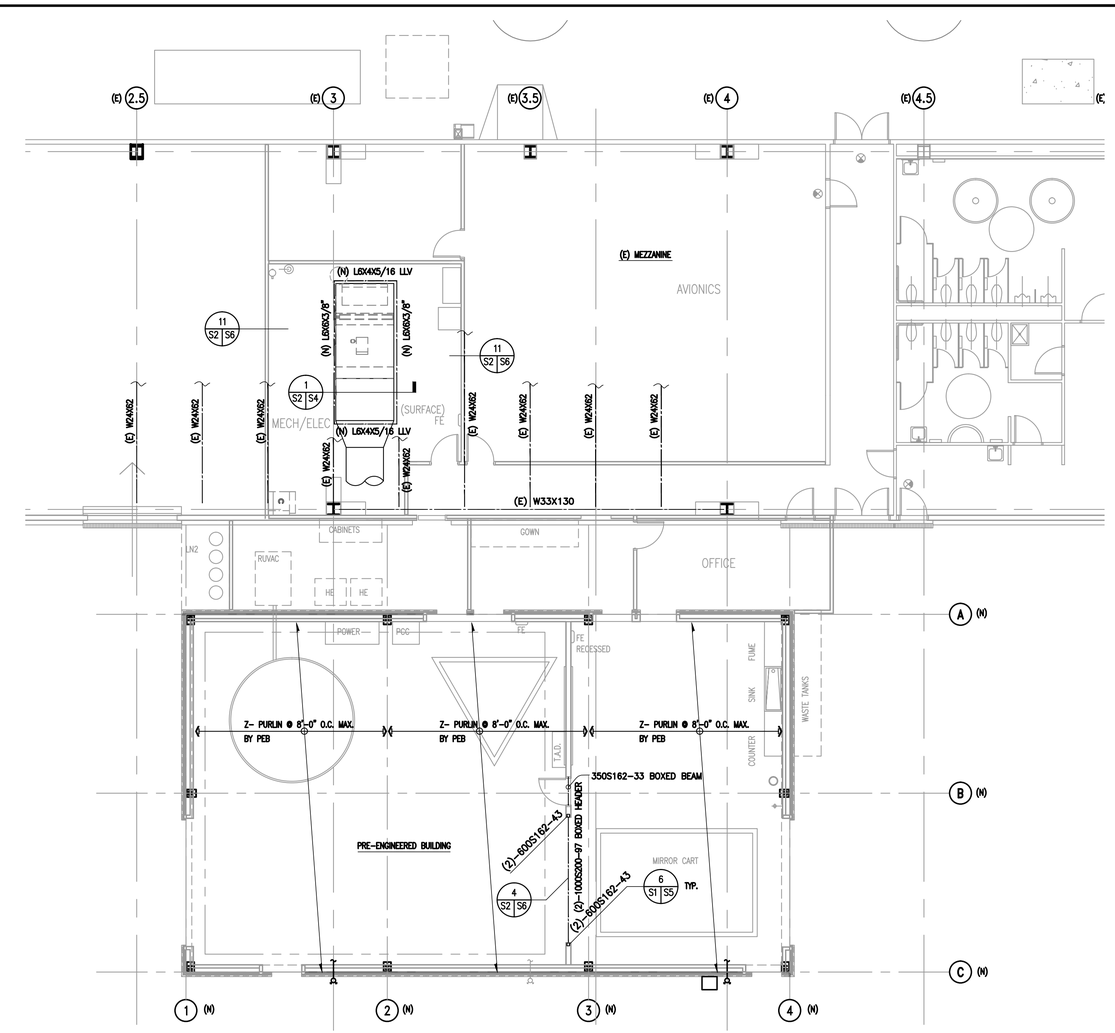

PLAN NOTES:
1. REFER TO ARCH. PLANS FOR HEIGHTS AND LOCATIONS OF NEW INTERIOR WALLS.
SEE SCHEDULE FOR METAL STUD SIZES.

LIGHT-GAGE STEEL STUD SCHEDULE AT INTERIOR WALLS

STUD	HEIGHT (MAX.)
350S125-33 @ 16" O.C.	12'-0"
600S125-33 @ 16" O.C.	24'-0"

PRE-ENGINEERED BUILDING ROOF AND (E) MEZZ FRAMING PLANS

SCALE: 1/8" = 1'-0" (1 / S2 / S2)

DATE	SYM	REVISION	BY	A'PD
7/2/09	1	Palmdale Comments Amendment		
12-01-11	△	AS-BUILT		

AQX ENGINEERING INC.
1520 Brookhollow, Suite 45
Santa Ana, CA 92705
OFF. (714) 662-0510
FAX. (714) 662-0559
www.aqxengineering.com

NATIONAL AERONAUTICS AND SPACE ADMINISTRATION
DRYDEN FLIGHT RESEARCH CENTER
EDWARDS, CA

DRAWING TITLE
PRE-ENGINEERED BUILDING ROOF AND (E) MEZZ PLAN

PROJECT TITLE
CONSTRUCT MIRROR COATING FACILITY
DAOF BUILDING 703
100% FINAL DESIGN

APPROVALS	DATE
Chief, Facilities Engineering & Asset Mgmt. Office	
Project Manager	
Security Office	
Project Requestor	
Safety Office	
Telecom	

DRAWN BY	KZ	DATE STRTD	4-18-08
W.O. #	2009-612	DATE PRNTD	4-14-09
PLOT SCALE / CAD FILE NAME	TRADE SH. No. S2	EDM-1685	
		SHEET No. 14 of 40	

AS-BUILT

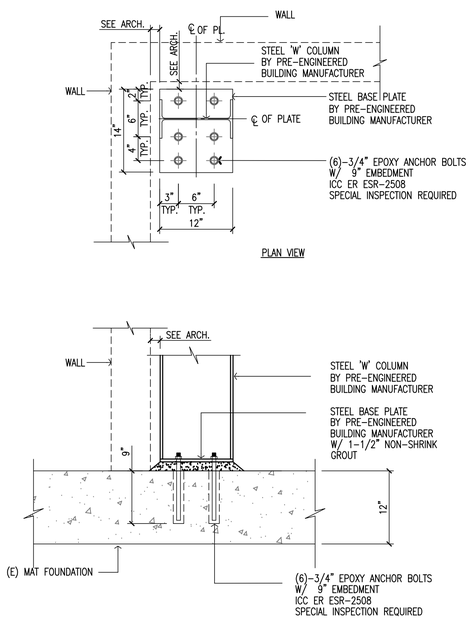

(N) STEEL COLUMN TO (E) MAT

SCALE: NONE | 6 S1 S3

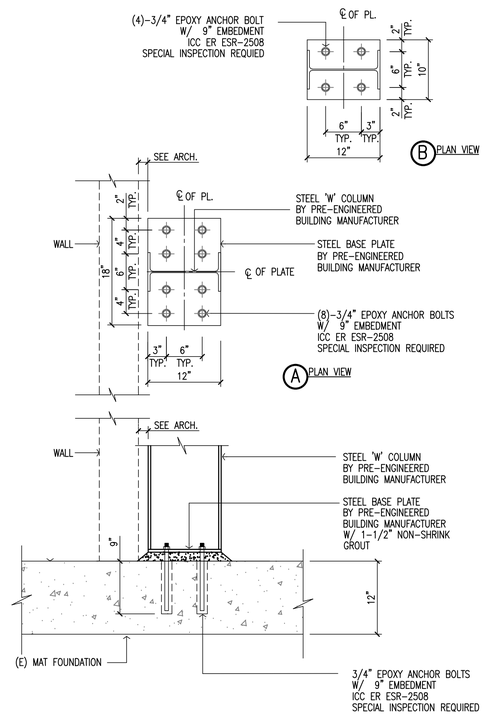

(N) STEEL COLUMN TO (E) MAT

SCALE: NONE | 5 S1 S3

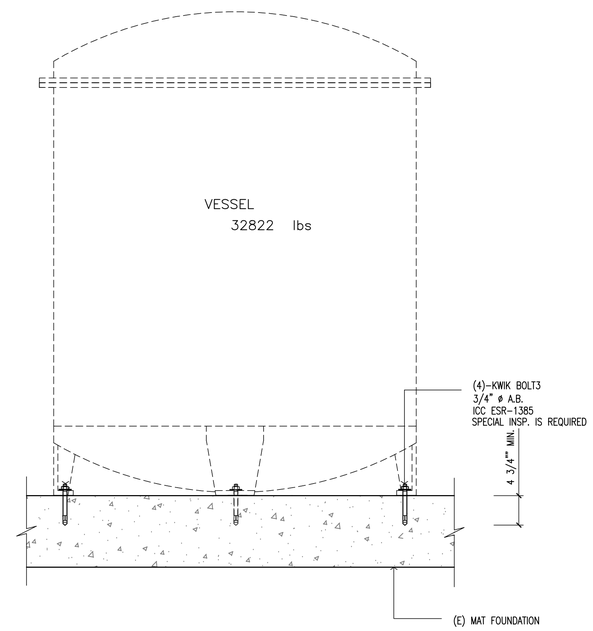

ANCHORAGE FOR VESSEL

SCALE: NONE | 3 S1 S3

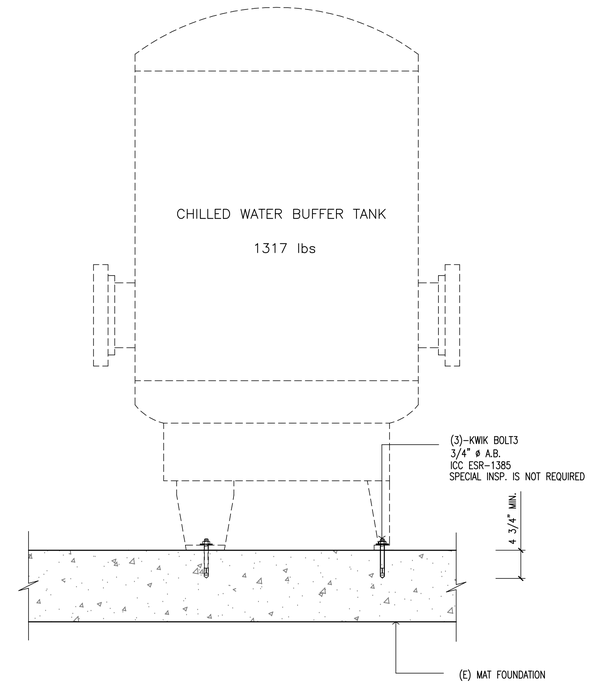

ANCHORAGE FOR CHILLED WATER BUFFER TANK

SCALE: NONE | 1 S1 S3

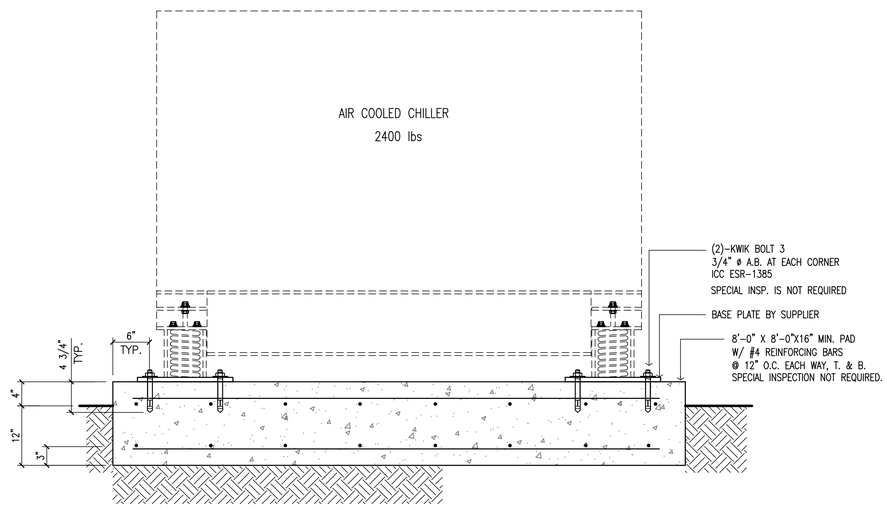

CHILLER PAD

SCALE: NONE | 7 S1 S3

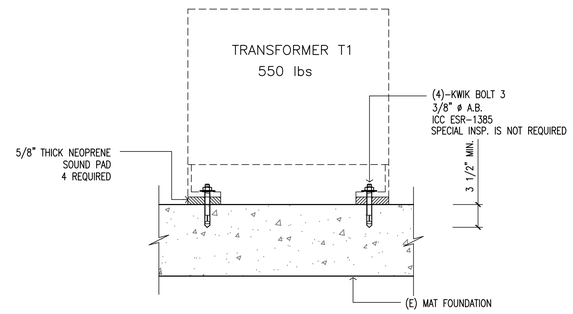

ANCHORAGE FOR TRANSFORMER

SCALE: NONE | 4 S1 S3

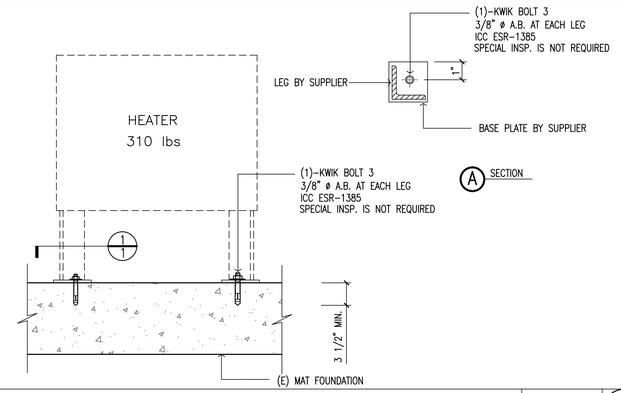

ANCHORAGE FOR HEATER

SCALE: NONE | 2 S1 S3

AQX ENGINEERING INC.
1520 Brookhollow, Suite 45
Santa Ana, CA 92705
OFF. (714) 662-0510
FAX. (714) 662-0559
www.aqxengineering.com

DATE	SYM	REVISION	BY	A'PD
7/2/09	1	Palmdale Comments Amendment		
06-03-11	2	AS-BUILT		

NATIONAL AERONAUTICS AND SPACE ADMINISTRATION
DRYDEN FLIGHT RESEARCH CENTER
EDWARDS, CA

DRAWING TITLE
DETAILS

PROJECT TITLE
CONSTRUCT MIRROR COATING FACILITY
DAOF BUILDING 703
100% FINAL DESIGN

APPROVALS	DATE
Chief, Facilities Engineering & Asset Mgmt. Office	
Project Manager	
Security Office	
Project Requestor	
Safety Office	
Telecom	

DRAWN BY	KZ	DATE STRTD	4-18-08
W.O. #	2009-612	DATE PRNTD	4-14-09
PLOT SCALE		TRADE SH. No.	EDM-1685
CAD FILE NAME		S3	SHEET No. 15 of 40

06-03-11 AS-BUILT

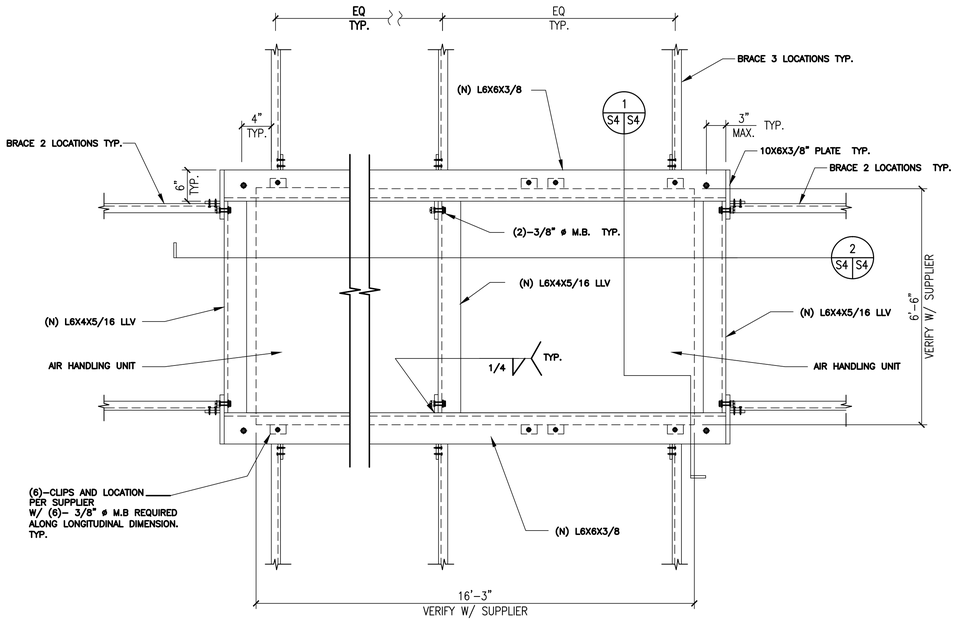

PLAN VIEW OF AIR HANDLER

SCALE: NONE | 3 S4 S4

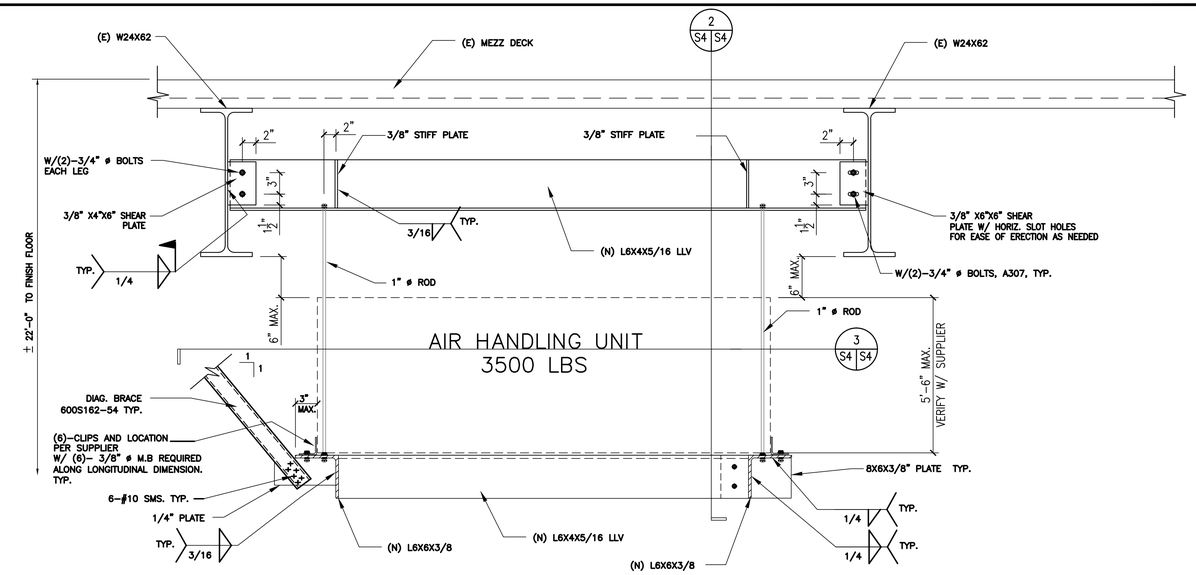

AIR HANDLER ATTACHMENT

SCALE: NONE | 1 S2 S4

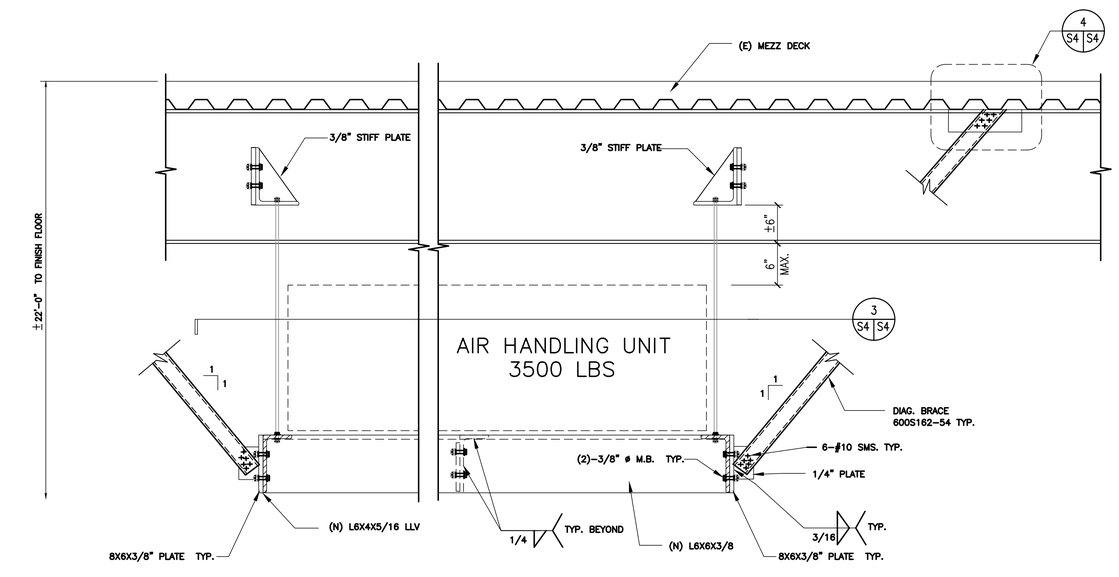

AIR HANDLER ATTACHMENT

SCALE: NONE | 2 S4 S4

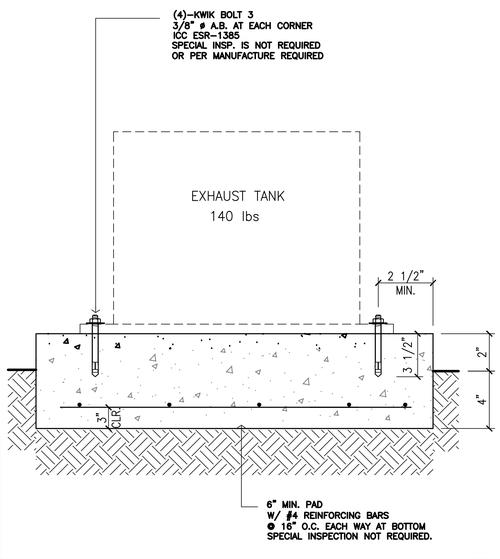

EXAUST TANK PAD

SCALE: NONE | 5 S1 S4

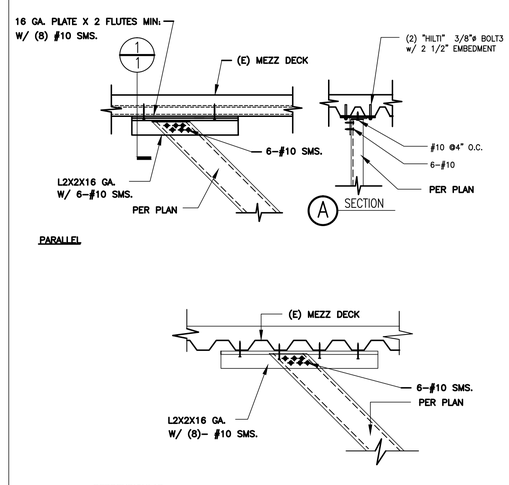

BRACING DETAIL

SCALE: NONE | 4 S6 S4

AQX ENGINEERING INC.
1520 Brookhollow, Suite 45
Santa Ana, CA 92705
OFF. (714) 662-0510
FAX. (714) 662-0559
www.aqxengineering.com

DATE	SYM	REVISION	BY	A'PD
7/2/09	1	Palmdale Comments Amendment		
16-03-11	1	AS-BUILT		

NATIONAL AERONAUTICS AND SPACE ADMINISTRATION
DRYDEN FLIGHT RESEARCH CENTER
EDWARDS, CA

DRAWING TITLE
DETAILS

PROJECT TITLE
CONSTRUCT MIRROR COATING FACILITY
DAOF BUILDING 703
100% FINAL DESIGN

APPROVALS	DATE
Chief, Facilities Engineering & Asset Mgmt. Office	
Project Manager	
Security Office	
Project Requestor	
Safety Office	
Telecom	

DRAWN BY	KZ	DATE STRTD	4-18-08
W.O. #	2009-612	DATE PRNTD	4-14-09
PLOT SCALE		TRADE SH. No.	EDM-1685
CAD FILE NAME		S4	SHEET No. 16 of 40

AS-BUILT

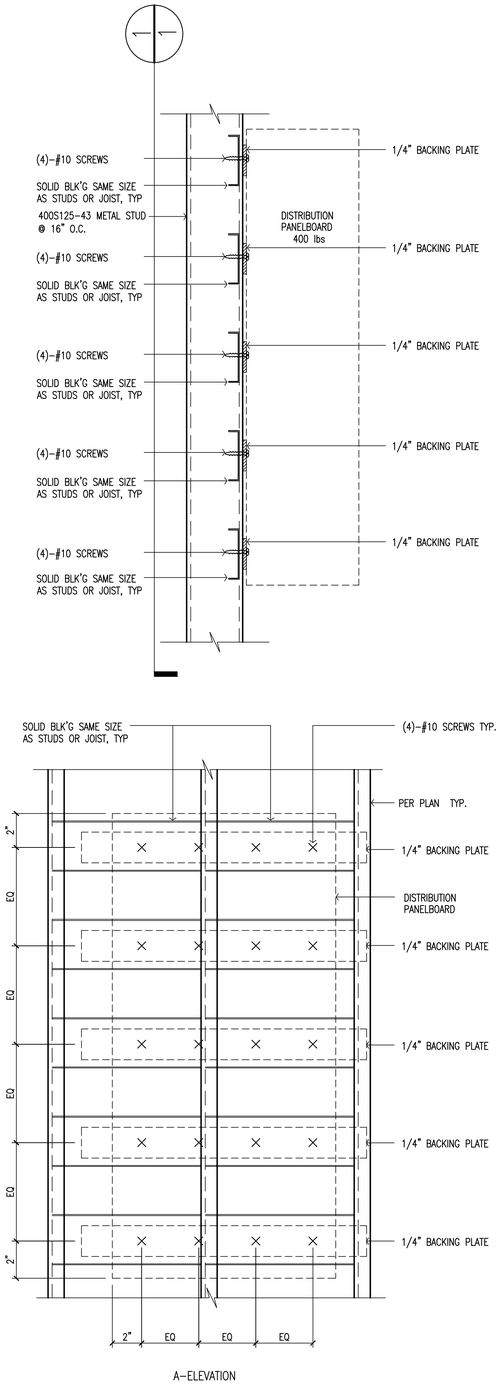

PANELBOARD ELEVATION

SCALE: NONE | 10 S1 S5

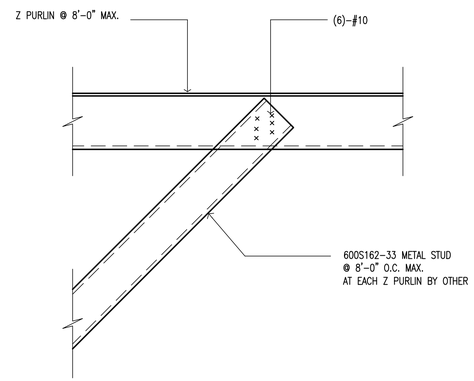

BRACING CONNECTION

SCALE: NONE | 7 S1 S5

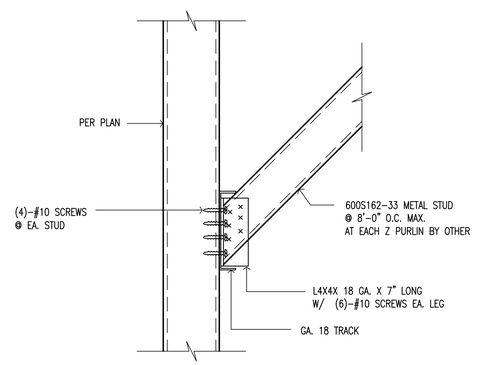

BRACING CONNECTION

SCALE: NONE | 8 S1 S5

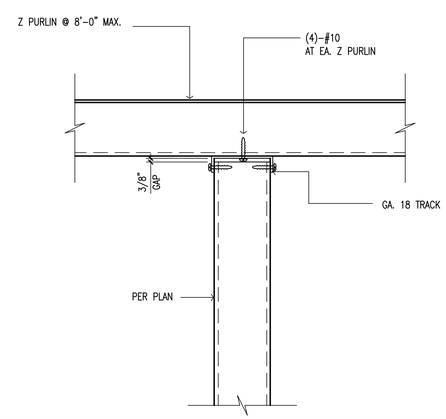

TOP CONN. FOR PARTITION WALL

SCALE: NONE | 9 S1 S5

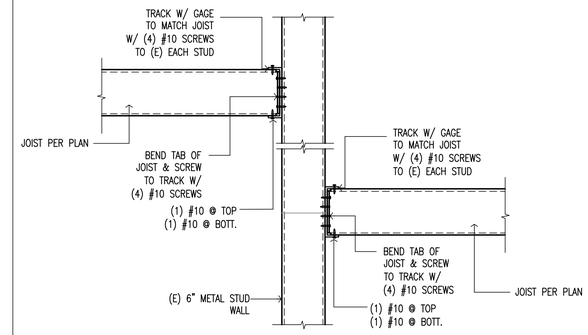

(N) JOIST TO (E) WALL

SCALE: NONE | 4 S1 S5

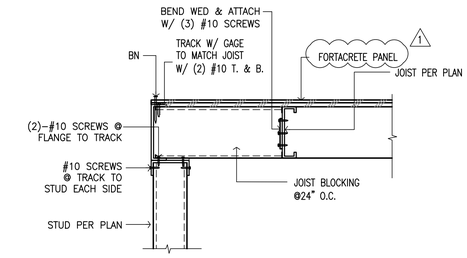

ROOF JOIST AT WALL

SCALE: NONE | 1 S1 S5

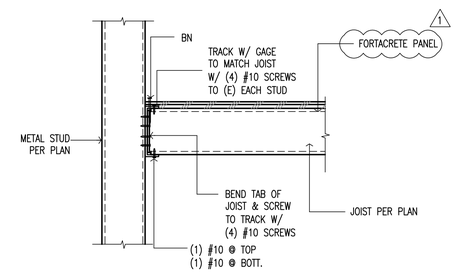

ROOF JOIST TO WALL

SCALE: NONE | 5 S1 S5

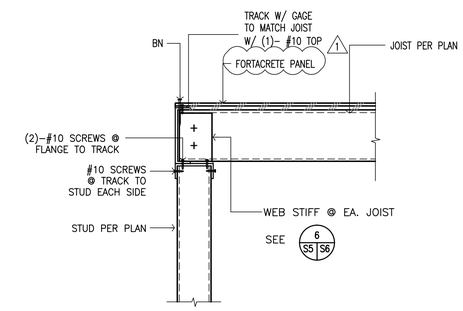

ROOF JOIST AT WALL

SCALE: NONE | 2 S1 S5

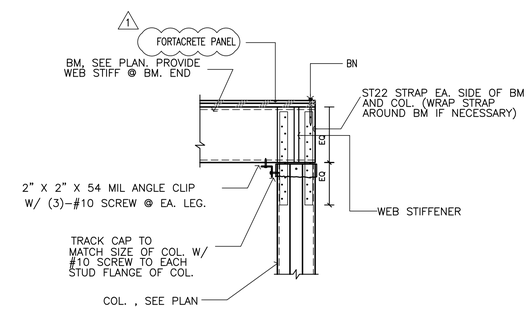

COLUMN-BEAM CONNECTION

SCALE: NONE | 6 S1 S5

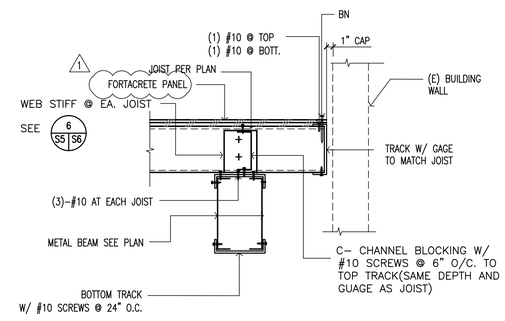

ROOF JOIST AT BEAM

SCALE: NONE | 3 S1 S5

AQX ENGINEERING INC.
1520 Brookhollow, Suite 45
Santa Ana, CA 92705
OFF. (714) 662-0510
FAX. (714) 662-0559
www.aqxengineering.com

DATE	SYM	REVISION	BY	A'PD
7/2/09	1	Palmdale Comments Amendment		
		AS-BUILT		

NATIONAL AERONAUTICS AND SPACE ADMINISTRATION
DRYDEN FLIGHT RESEARCH CENTER
EDWARDS, CA

DRAWING TITLE
DETAILS

PROJECT TITLE
CONSTRUCT MIRROR COATING FACILITY
DAOF BUILDING 703
100% FINAL DESIGN

APPROVALS	DATE
Chief, Facilities Engineering & Asset Mgmt. Office	
Project Manager	
Security Office	
Project Requestor	
Safety Office	
Telecom	

DRAWN BY	KZ	DATE STRTD	4-18-08
W.O. #	2009-612	DATE PRNTD	4-14-09
PLOT SCALE		TRADE SH. No.	EDM-1685
CAD FILE NAME		S5	SHEET No. 17 of 40

AS-BUILT

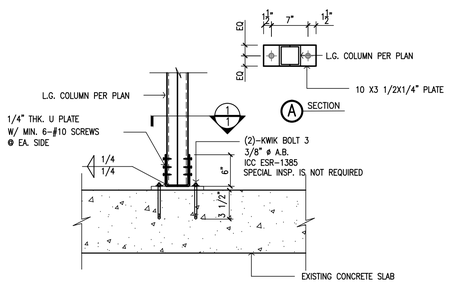

(N) COLUMN AT (E) SLAB

SCALE: NONE | 12 S1 S6

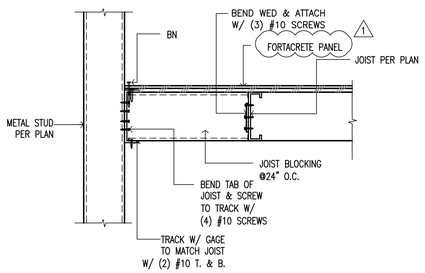

ROOF JOIST TO WALL

SCALE: NONE | 13 S1 S6

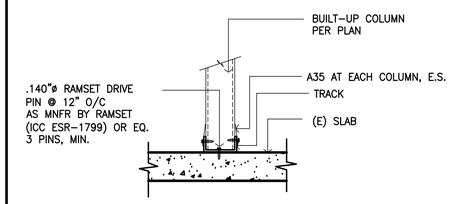

BOTTOM CONN. AT COLUMN

SCALE: NONE | 14 S1 S6

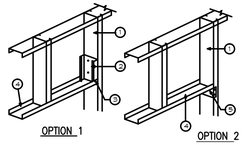

1- JAMB STUD(USE MULTIPLE STUDS AS REQUIRED)
2- 4" LONG STUD PIECE SECURED TO JAMB(USE CLIP ANGLE AS ALTERNATE) W/ (4)-#8 SCREWS
3- USE (1) DRYWALL FRAMING SCREW EACH SIDE

STANDARD HEAD FOR NON-BRG INTERIOR WALL

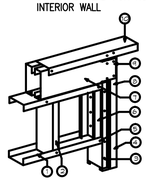

JAMB & HEAD BEARING

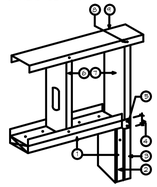

JAMB & HEAD NON-BEARING

4- HEADER TRACK
5- CUT FLANGES AND BEND WEB TO FORM A 4" OVERLAP. USE MIN. (2) DRYWALL FRAMING SCREWS EACH SIDE

1- HEAD TRACK 20 GAUGE
2- CRIPPLE STUD 20 GAUGE
3- TRACK W/ #8 SCREWS @ 12" O.C. EACH LEG
4- MULTIPLE MEMBERS
5- #8 SCREW
6- SECTION OF STUD W/ #8 SCREWS TO TRACK
7- HEADER BEAM
8- CONNECT STUDS TOGETHER @ WEBS W/#8 SCREWS @ 12" O.C.
9- COPE WEBS TO HEADER SEE PLAN FOR NUMBER OF SCREWS. PLACE SAME NUMBER OF SCREWS ON E/S OF BEAM
10- TOP TRACK

1- WOOD BUCKS W/ #6 X 1" SCREWS @ 12" O.C. TO EACH TRACK AND KING STUD
2- TRACK W/ #6 SCREWS @ 12" O.C. EACH LEG
3- MULTIPLE MEMBERS
4- 2" MIN.
5- CUT FRAME OF TRACK & BEND SCREW W/(4) #6 SCREWS TWO EACH SIDE
6- CRIPPLE STUD
7- KING STUD
8- #6 SCREW (TYP)
9- TOP TRACK

OPENING DETAIL

SCALE: NONE | 9 S6 S6

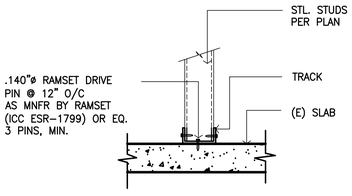

BOTTOM CONN. AT PARTITION WALL

SCALE: NONE | 10 S1 S6

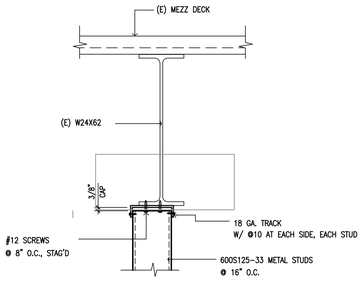

TOP OF WALL TO (E) BEAM

SCALE: NONE | 11 S2 S6

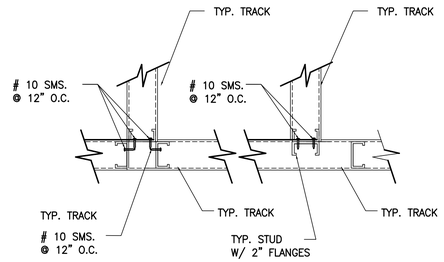

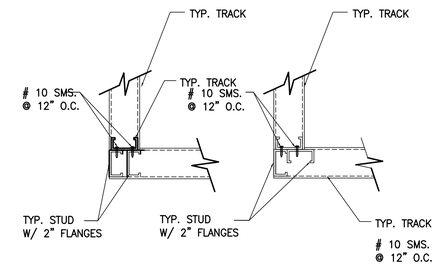

TYPICAL STUD INTERSECTION

SCALE: NONE | 7 S6 S6

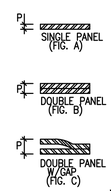

POINT STYLE	NORMAL SCREW SIZE	P (IN) RECOMMENDED PANEL THICKNESS
2	6	0.100 MAX.
	8	0.100 MAX.
	10	0.110 MAX.
	12	0.140 MAX.
3	6	0.100 – 0.110
	8	0.100 – 0.140
	10	0.110 – 0.175
	12	0.110 – 0.210
	12	0.175 – 0.220
4	14	0.110 – 0.250

WHEN THE PANEL TO BE DRILLED IS COMPRISED OF TWO OR MORE LAYERS (SEE FIG'S B & C), THE GAP BETWEEN THE LAYERS (SEALING STRIP, OR SEPERATION CAUSED BY THE PRESSURE EXERTED BY THE DRIVER) MUST BE CONSIDERED IN DETERMINING THE POINT STYLE.

DETAIL

SCALE: NONE | 8 S6 S6

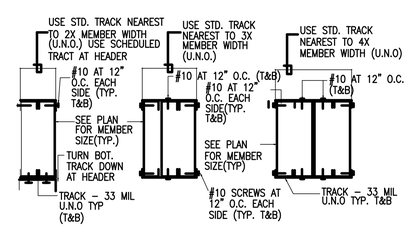

BUILT-UP BEAM SCREWS

SCALE: NONE | 4 S2 S6

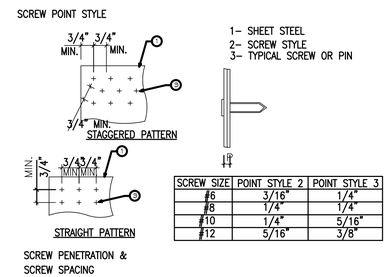

SCREW SIZE	POINT STYLE 2	POINT STYLE 3
#6	3/16"	1/4"
#8	1/4"	1/4"
#10	1/4"	5/16"
#12	5/16"	3/8"

SCREWS DETAILS

SCALE: NONE | 5 S6 S6

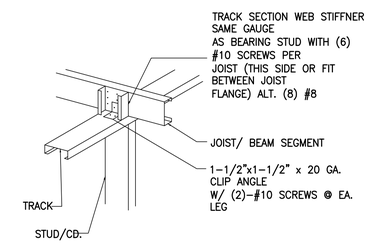

NOTE:
ROOF AND FLOOR JOISTS TO ALIGN WITH STUDS ABOVE AND BELOW, TYP.

WEB STIFFNER

SCALE: NONE | 6 S5 S6

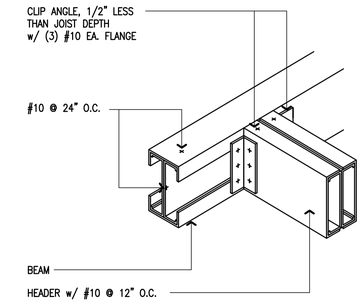

BEAM CONNECTION

SCALE: NONE | 1 S6 S6

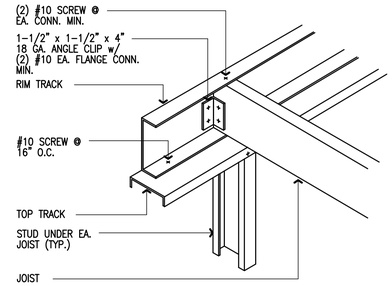

JOIST AT WALL

SCALE: NONE | 2 S6 S6

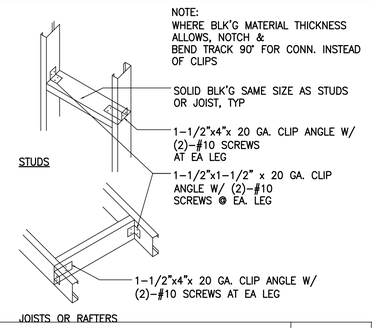

SOLID BLOCKING

SCALE: NONE | 3 S6 S6

NOT USED

SCALE: NONE | 15 S6 S6

AQX ENGINEERING INC.
1520 Brookhollow, Suite 45
Santa Ana, CA 92705
OFF. (714) 662-0510
FAX. (714) 662-0559
www.aqxengineering.com

DATE	SYM	REVISION	BY	A'PD
7/2/09	1	Palmdale Comments Amendment		
10-01-11	2	AS-BUILT		

NATIONAL AERONAUTICS AND SPACE ADMINISTRATION
DRYDEN FLIGHT RESEARCH CENTER
EDWARDS, CA

DRAWING TITLE
NOTES AND DETAILS

PROJECT TITLE
CONSTRUCT MIRROR COATING FACILITY
DAOF BUILDING 703
100% FINAL DESIGN

APPROVALS	DATE
Chief, Facilities Engineering & Asset Mgmt. Office	
Project Manager	
Security Office	
Project Requestor	
Safety Office	
Telecom	

DRAWN BY	KZ	DATE STRTD	4-18-08
W.O. #	2009-612	DATE PRNTD	4-14-09
PLOT SCALE		TRADE SH. No.	EDM-1685
CAD FILE NAME		S6	SHEET No. 18 of 40

AS-BUILT

LEGEND

SINGLE LINE	DOUBLE LINE	DESCRIPTION
20x12	20x12	FIRST DIMENSION DENOTES VIEW SHOWN: RECTANGULAR OR OVAL
R, D	R	RISER OR DROP IN DIRECTION OF ARROW, RECTANGULAR DUCT
		TRANSITION, 18" MIN. LENGTH , 15" MAX. EACH SIDE, RECTANGULAR OR ROUND
20x12	20x12	LINED DUCT
		RECTANGULAR TO ROUND TRANSITION
		90° ELBOW
		45° HEEL TAKE-OFF FITTING RECTANGULAR DUCT
		CONICAL OR FLARED SPIN-IN OR CONICAL TAP ON RECTANGULAR DUCT
18ø	18ø	18 INCH ROUND DUCT
R, D	R	RISE OR DROP IN DIRECTION OF ARROW, ROUND DUCT
		ROUND DUCT ELBOW: R/D=1.3 MIN.
		90° STRAIGHT CONICAL TEE FITTING
		45ø LATERAL FITTING
		FLEXIBLE DUCT (SHOWN W/ DIFFUSER)
		DIVIDED FLOW FITTING
		DIVIDED FLOW FITTING
		BALANCE DAMPER OR VOLUME DAMPER
BD	BD	BACKDRAFT DAMPER
CSFD	CSFD	DUCT TRANSITION TO COMBINATION SMOKE/FIRE DAMPER

SYMBOL	DESCRIPTION
	SQUARE SUPPLY AIR DIFFUSER 4-WAY THROW
	RETURN OR TRANSFER GRILLE
	EXHAUST GRILLE
SWS	SIDEWALL DIFFUSER - SUPPLY
SWR	SIDEWALL REGISTER - RETURN
	LINEAR SLOT
CFSD	COMBINATION FIRE/SMOKE DAMPER
T	THERMOSTAT
H	HUMIDISTAT
SD	SMOKE DETECTOR
	ELBOW WITH TURNING VANE

ABBREVIATIONS

NOTE:
ABBREVIATIONS LISTED ARE FOR GENERAL USE. DISREGARD THOSE WHICH ARE NOT USED ON DRAWING.

ABBREV.	DESCRIPTION	ABBREV.	DESCRIPTION
AFC	ABOVE FINISHED CEILING	LF	LINEAR FEET
AFF	ABOVE FINISHED FLOOR	LRA	LOCKED ROTOR AMPS
AFG	ABOVE FINISHED GRADE	LWB	LEAVING WET BULB
AHU	AIR HANDLING UNIT	MAX	MAXIMUM
AMPS	AMPERES	MBH	1000 BTU PER HOUR
APD	AIR PRESSURE DROP	MCA	MINIMUM CIRCUIT AMPACITY
BD	BACKDRAFT DAMPER	MD	MOTORIZED DAMPER
BFF	BELOW FINISHED FLOOR	MFR	MANUFACTURER
BLDG	BUILDING	MIN	MINIMUM
BOD	BOTTOM OF DUCT	(N)	NEW
BTU	BRITISH THERMAL UNIT	NTS	NOT TO SCALE
CD	CONDENSATE DRAIN	OA	OUTSIDE AIR
CFH	CUBIC FEET PER HOUR	OBD	OPPOSED BLADE DAMPER
CFM	CUBIC FEET PER MINUTE	OD	OUTSIDE DIAMETER
CHWR	CHILLED WATER RETURN	POC	POINT OF CONNECTION
CHWS	CHILLED WATER SUPPLY	PSI	POUNDS PER SQUARE INCH
CW	COLD WATER	QTY	QUANTITY
DB	DRY BULB	RA	RETURN AIR
dB	DECIBEL	RCP	REFLECTED CEILING PLAN,
DC	DIRECT CURRENT		REINFORCED CONCRETE PIPE
DEG	DEGREES	REQD	REQUIRED
DIA	DIAMETER	RH	RELATIVE HUMIDITY
DIM	DIMENSION	RHG	REFRIGERANT HOT GAS
DISC	DISCONNECT	RL	REFRIGERANT LIQUID
DN	DOWN	RLA	RUNNING LOAD AMPS
DWG(S)	DRAWING(S)	RPM M	REVOLUTIONS PER MINUTE MOTOR
DX	DIRECT EXPANSION	RPM F	REVOLUTIONS PER MINUTE FAN
EA	EXHAUST AIR, EACH	RS	REFRIGERANT SUCTION
EAT	ENTERING AIR TEMPERATURE	RTU	ROOF TOP UNIT
EDB	ENTERING DRY BULB	SA	SUPPLY AIR
EF	EXHAUST FAN	SF	SQUARE FEET / SUPPLY FAN
EFF	EFFICIENCY	SMACNA	SHEET METAL AND AIR
ESP	EXTERNAL STATIC PRESSURE		CONDITIONING CONTRACTOR'S
EWB	ENTERING WET BULB		NATIONAL ASSOCIATION
EXH	EXHAUST	SP	STATIC PRESSURE
EXIST, (E)	EXISTING	SPEC	SPECIFICATION
FPI	FINS PER INCH	SQ	SQUARE
FT	FOOT, FEET	SS	STAINLESS STEEL, SANITARY SEWER,
FC	FAN COIL		SERVICE SINK
FD	FIRE DAMPER	T	TEMPERATURE, THERMOSTAT
° F	DEGREES FAHRENHEIT	TDH	TOTAL DYNAMIC HEAD
GC	GENERAL CONTRACTOR	THRU	THROUGH
GPM	GALLONS PER MINUTE	TSP	TOTAL STATIC PRESSURE
HD	HEAD, HUB DRAIN	TYP	TYPICAL
HP	HORSEPOWER, HEAT PUMP	U/C	UNDERCUT
HTG	HEATING	V	VOLT
HZ	HERTZ	VA	VOLT-AMPERE
ID	INSIDE DIAMETER	VD	VOLUME DAMPER
IN	INCH	W	WATT, WIDTH
IN WG	INCHES WATER GAUGE	W/	WITH
IN WC	INCHES OF WATER COLUMN	W/O	WITHOUT
L	LENGTH	WB	WET BULB
LAT	LEAVING AIR TEMPERATURE	WC	WATER COLUMN
LB(S),#	POUND(S)	XFMR	TRANSFORMER
LDB	LEAVING DRY BULB		

GENERAL NOTES

1. ALL WORK SHALL BE PERFORMED IN STRICT ACCORDANCE WITH ALL APPLICABLE STATE, NATIONAL, AND LOCAL BUILDING CODES AND STANDARD, INCLUDING THE CBC, CMC, CEC, AND TITLE 24.
2. PRIOR TO BIDDING, OBTAIN A FULL COPY OF THE PLANS SPECIFICATIONS.
3. THESE DRAWINGS ARE DIAGRAMMATIC. ACTUAL FIELD CONDITIONS MAY VARY AND MUST BE FIELD VALIDATED AND COORDINATED WITH OTHER TRADES PRIOR TO FABRICATION AND CONSTRUCTION.
4. COORDINATE INSTALLATION WITH THE WORK OF OTHER TRADES PRIOR TO STARTING. IN EVENT THAT CONFLICTS ARE FOUND WITH THE WORK OF OTHER TRADES, BRING SUCH CONFLICTS TO THE GOVERNMENT ATTENTION FOR RESOLUTION PRIOR TO PROCEEDING WITH THE WORK IN THAT AREA.
5. PRIOR TO CONSTRUCTION THE CONTRACTOR SHALL SUBMIT SHOP AND VENDOR DRAWINGS IN ADEQUATE DETAIL, ORGANIZED AND MARKED FOR REVIEW BY THE ARCHITECT AND ENGINEER OF RECORD.
6. CONTRACTOR IS RESPONSIBLE FOR PATCHING AND REPAIRING AREAS, PIPING, DUCTWORK, ETC., EXISTING OR NEW, THAT ARE DAMAGED AS A RESULT OF THE WORK. REPAIR TO MATCH EXISTING CONDITIONS.
7. CUTTING OR PENETRATION OF STRUCTURAL MEMBERS IS PROHIBITED WITHOUT THE PRIOR WRITTEN APPROVAL OF THE STRUCTURAL ENGINEER OF RECORD AND THE PROJECT ARCHITECT/OWNER.
8. HORIZONTAL PIPING AND TUBING SHALL BE SUPPORTED AT SUFFICIENTLY CLOSE INTERVALS TO KEEP IT IN ALIGNMENT AND PREVENT EXCESSIVE SAGGING. SUPPORT EACH PIPE INDEPENDENTLY FROM OTHER PIPES. DO NOT USE WIRE OR PLUMBERS TAPE FOR HANGING OR STRAPPING PIPES.
9. UNIONS SHALL BE PROVIDED AND INSTALLED PRIOR TO EQUIPMENT CONNECTIONS. PROVIDE DIELECTRIC UNIONS, GASKETS AND FASTENERS AT DISSIMILAR METAL CONNECTIONS OR CONTACT POINTS.
10. PROVIDE ADEQUATE SUPPORT (THRUST RESTRAINTS, ETC.) FOR PIPING AT POINTS WHERE EQUIPMENT IS DISCONNECTED FROM THE SYSTEM.
11. EQUIPMENT SHALL BE INSTALLED, DUCTED AND/OR PIPED IN ACCORDANCE APPLICABLE CODES AND MANUFACTURERS RECOMMENDATIONS.
12. ACCURATE "AS-BUILT" DRAWINGS SHALL BE MAINTAINED DURING CONSTRUCTION AND SUBMITTED FOR APPROVAL UPON COMPLETION OF INSTALLATION.
13. MECHANICAL SYSTEMS SHALL BE TESTED, BALANCED AND OPERATED TO DEMONSTRATE TO THE OWNER OR DESIGNATED REPRESENTATIVE THAT THE INSTALLATION AND PERFORMANCE OF THE SYSTEMS CONFORM TO THE DESIGN INTENT. ALL TESTING AND BALANCING SHALL BE PERFORMED BY A QUALIFIED INDEPENDENT AGENCY CERTIFIED BY THE ASSOCIATION AIR BALANCE COUNCIL (AABC). TEST RESULTS SHALL BE DOCUMENTED AND SUBMITTED FOR APPROVAL.
14. LINE VOLTAGE EQUIPMENT SUCH AS MOTOR STARTERS, DISCONNECTS, CONVENIENCE OUTLET, AND FIRE SMOKE DAMPERS AND DUCT SMOKE DETECTORS SHALL BE PROVIDED AND INSTALLED UNDER DIVISION 26 EXCEPT FOR DUCT SMOKE DETECTORS AND FIRE SMOKE DAMPERS WHICH SHALL BE INSTALLED UNDER DIVISION 26. THE EXCEPTION IS MECHANICAL EQUIPMENT THAT IS SCHEDULED WITH THESE TYPES OF ACCESSORIES.
15. CONTROL SCHEMATICS ARE INTENDED TO CONVEY OPERATING PRINCIPLES AND INTER-RELATIONSHIPS ONLY. ACTUAL SIZING, LOCATION, AND COMPONENTS AND WIRING SHALL BE PER THE MANUFACTURERS RECOMMENDATION AND ALL CODE REQUIREMENTS.

TITLE 24 NOTES

TITLE 24 DOES NOT APPLY TO THIS PROJECT FOR THE FOLLOWING REASONS:

1. THE DESIGN OF THE HVAC SYSTEM WAS BASED ON THE REQUIREMENTS OF THE MIRROR COATING FACILITY PROCESS WHICH REQUIRES LARGE AIR FLOWS. HEPA FILTER FOR SPACE CLEANLINESS ROOM PRESSURIZATION AND NO ECONOMIZER CYCLE.
2. THE AMOUNT OF OUTSIDE AIR REQUIRED FOR PRESSURIZATION, GREATLY EXCEEDS THE AMOUNT REQUIRED FOR PEOPLE VENTILATION, WHICH PENALIZES THE COOLING AND HEATING CONSUMPTION.
3. EQUIPMENT EFFICIENCIES SYSTEM TEMPERATURE CONTROLS, AIR DISTRIBUTION DUCT LEAKAGE SEALING AND PIPE/DUCT INSULATION R-VALUE ALL COMPLY WITH TITLE 24.

SEISMIC NOTES

1. ANCHORAGE AND/OR SEISMIC RESTRAINTS SHALL BE DESIGNED BY A REGISTERED PROFESSIONAL ENGINEER LICENSED IN THE STATE OF CALIFORNIA.
2. THE ANCHORAGE AND/OR SEISMIC RESTRAINT OF PERMANENT EQUIPMENT AND ASSOCIATED SYSTEMS LISTED SHALL BE DESIGNED TO RESIST THE TOTAL DESIGN SEISMIC FORCES PRESCRIBED IN SECTION 1632.2 OF THE 2007 CALIFORNIA BUILDING CODE AND COMPLY WITH SMACNA CATAGORY A.
3. SEISMIC RESTRAINTS ARE REQUIRED FOR THE FOLLOWING INSTALLATIONS. REFER TO THE SMACNA GUIDELINES FOR SEISMIC RESTRAINTS FOR ADDITIONAL REQUIREMENTS:
   - A. FLOOR OR ROOF MOUNTED EQUIPMENT WEIGHING 400 LBS. OR GREATER.
   - B. SUSPENDED OR WALL MOUNTED EQUIPMENT WEIGHING 20 LBS. OR GREATER.
   - C. VIBRATION ISOLATION EQUIPMENT WEIGHING 20 LBS. OR GREATER.
   - D. PIPING 1-1/4 INCHES NOMINAL DIAMETER AND LARGER LOCATED IN BOILER, MECHANICAL EQUIPMENT AND REFRIGERATION MECHANICAL ROOMS.
   - E. PIPING 2-1/2 INCHES NOMINAL DIAMETER AND LARGER.
   - F. PIPES SUPPORTED BY A TRAPEZE WHERE NONE OF THOSE ELEMENTS WOULD INDIVIDUALLY REQUIRE BRACING NEED NOT BE BRACED IF CONNECTIONS TO THE PIPE/DUCT OR DIRECTIONAL CHANGES DO NOT RESTRICT MOVEMENT OF THE TRAPEZE. IF THIS FLEXIBILITY IS NOT PROVIDED, BRACING IS REQUIRED WHEN THE COMBINED OPERATING WEIGHT OF ALL ELEMENTS SUPPORTED BY THE TRAPEZE IS 10 LBS/FT OR GREATER.

DRAWING/DETAIL REFERENCE KEY

SYMBOL	DESCRIPTION
1	PLAN REFERENCE / KEY NOTE
1	REVISION
A	AIR DEVICE CALLOUT
	POINT OF CONNECTION
	POINT OF DISCONNECTION/DEMOLITION

RE: 2-M0.01/M0.01

REFER TO
DRAWING/DETAIL NUMBER
SHEET NUMBER WHERE DETAIL IS SHOWN
SHEET NUMBER WHERE DETAIL IS TAKEN

EQUIPMENT TAG

DWG: D:\20-EDM-1685-AS-BUILT-M0.DWG USER: josh
DATE: Jun 29, 2011 8:23am XREFS: IMAGES:

DONN C. GILMORE & ASSOCIATES, INC.
Consulting Mechanical and Electrical Engineers
DCGA
4051 E. La Palma Ave., Ste. A
Anaheim, CA 92807
Ph.: 714.630.4291
Fax: 714.630.4805

DATE	SYM	REVISION	BY	A'PD
10-01-11	1	AS-BUILT		

NATIONAL AERONAUTICS AND SPACE ADMINISTRATION
DRYDEN FLIGHT RESEARCH CENTER
EDWARDS, CA

DRAWING TITLE
MECHANICAL
LEGEND AND NOTES

PROJECT TITLE
CONSTRUCT MIRROR COATING FACILITY
DAOF BUILDING 703
100% FINAL DESIGN

APPROVALS	DATE
Chief, Facilities Engineering & Asset Mgmt. Office	
Project Manager	
Security Office	
Project Requestor	
Safety Office	
Telecom	

DRAWN BY	ANH, JZ, LL	DATE STRTD	4-18-08
W.O. #		DATE PRNTD	4-14-09
PLOT SCALE / CAD FILE NAME	TRADE SH. No. MO	EDM-1685	
		SHEET No. 21 of 40	

AS-BUILT
10-01-11

AIR HANDLING UNIT SCHEDULE

SYMBOL	MANUF. / MODEL	CFM	TOTAL STATIC PRESSURE	EXT. STATIC PRESSURE	DRIVE	RPM	BHP	ELECTRICAL MOTOR HP	ELECTRICAL VOLT	ELECTRICAL PH	ELECTRICAL HZ	COOLING COIL FACE VEL. (FPM)	COOLING COIL NO. OF COILS	COOLING COIL MIN. ROWS	COOLING COIL FPI	COOLING COIL TOTAL CAPACITY MBH	COOLING COIL SENSIBLE CAPACITY MBH	ENT. AIR TEMP. (ÆF) DB	ENT. AIR TEMP. (ÆF) WB	LVG. AIR TEMP (ÆF) DB	LVG. AIR TEMP (ÆF) WB	CHILLED WATER TEMP. (ÆF) ENT.	CHILLED WATER TEMP. (ÆF) LVG.	FLOW RATE GPM	WATER PRESSURE DROP (IN.)	AIR PRESSURE DROP (IN)	FILTER PRE-FILTER	FILTER FINAL FILTER	OPERATING WEIGHT (LBS.)	DIMENSIONS LENGTH	DIMENSIONS WITH	DIMENSIONS HEIGHT	REMARKS
AHU 1	TRANE CLIMATE CHANGER M SERIES SIZE 25	12,000	4.72	1.50	BELT	1,800	14.611	20	460	3	60	492	1	4	6	162.13	162.13	77.70	61.70	64.20	57.00	45	55	25.00	0.69	0.23	35% EFF	HEPA 99.97%	3,585	184"	78"	69.5"	– OR APPROVED EQUAL. – PROIVDE VARIABLE FREQUENCY DRIVE, 2" DEFLECTION INTERNAL SEISMIC RESTRAINED SPRINGS FOR SEISMIC ZONE 4.

ELECTRIC HUMIDIFIER SCHEDULE

SYMBOL	MANUF. / MODEL	CFM	POUND MOISTURE LBS/HR	DISPERSION	ABSORPTION DISTANCE INCHES	CONTROL INPUT	CAPACITY CONTROL	ELECTRICAL MCA	ELECTRICAL VOLT/PH	ELECTRICAL KW	OPERATING WEIGHT (LBS)	REMARKS
H 1	DRI STEEM VLC–32–2	12,000	72.08	RAPID SORB 1.5"	15	2–10 VDC	MODULATING	56.00	480/3	35.11	270	– SEE NOTES – OR APPROVED EQUAL

NOTES:
1. HUMIDIFIER WITH TANK INSULATION, NEMA 12 CONTROL CABINET, FACTORY MOUNTED AND WIRED, SUPPORT LEGS.
2. RAPID SORB TUBE BANK FOR 50x40 DUCT, 2" HEADER WITH 3 VERTICAL TUBES, 10'–0" STEAM HOSE 2" DIAMETER.
3. DUCT HIGH LIMIT HUMIDISTAT, AIRFLOW SWITCH.

FAN COIL SCHEDULE

SYMBOL	MANUF. / MODEL	SERVICE	CFM	E.S.P. (INCHES)	T.S.P. (INCHES)	COOLING CAPACITY TOTAL (MBH)	COOLING CAPACITY SENSIBLE (MBH)	COOLING CAPACITY GPM	COOLING CAPACITY EWT (ÆF)	COOLING CAPACITY LVG. (ÆF)	COOLING CAPACITY ROWS	COOLING CAPACITY AIR P.D. (INCHES)	COOLING CAPACITY WATER P.D. (FT H_2O)	ELECTRICAL HP	ELECTRICAL MCA	ELECTRICAL MOCP	ELECTRICAL VOLT/PH/Hz	OPERATING WEIGHT (LBS)	REMARKS
FC 1	TRANE BCHC072	PUMPS	2700	.30	1.34	74.18	63.77	15.53	45	55	6	1.009	4.98	1.50	6.0	20.0	208/3ø/60	251	– OR APPROVED EQUAL – PROVIDE WITH SECONDARY POLYMER DRAIN – PROVIDE WITH 1" THROWAWAY FILTER

PACKAGED AIR COOLED CHILLER UNIT SCHEDULE

SYMBOL	MANUF. / MODEL	SERVICE	COOLING CAPACITY @115ÅF & 2319 FT ELEVATION NOM.	COOLING CAPACITY @115ÅF & 2319 FT ELEVATION EER @ ARI CONDITION	GPM	CHILLED WATER TEMP. (ÆF) ENT.	CHILLED WATER TEMP. (ÆF) LVG.	P.D. FT. WATER	COMPRESSOR NO.	CONDENSER FANS NO.	ELECTRICAL VOLT	ELECTRICAL SYSTEM POWER KW	ELECTRICAL MCA	ELECTRICAL MOCP	REFRIGERANT	OPERATING WEIGHT (LBS)	REMARKS
CH 1	TRANE CGAFC25	CHILLED WATER SYSTEM	25	7.2	42	45	55	3.09	2	3	460/3/60	35.11	56.00	80.00	407C	2370	– OR APPROVED EQUAL

EXHAUST FAN SCHEDULE

SYMBOL	MANUF. / MODEL	SERVICE	TYPE	CFM	S.P. INCHES	FAN RPM	SONES	ELECTRICAL HP	ELECTRICAL VOLT	ELECTRICAL PHASE	OPERATING WEIGHT (LBS)	REMARKS
EF 1	GREENHECK 8–BISW–41	FUME HOOD	UTILITY CENTRIFUGAL	610	1.5	2,576	–	1/2	115	1	223	– OR APPROVED EQUAL – INTERLOCK WITH AHU–1
EF 2	GREENHECK BSQ–80–4	MECHANICAL ROOM	IN–LINE	200	.25	931	6.7	1/4	115	1	81	– OR APPROVED EQUAL – INTERLOCK WITH AHU–1

PUMP SCHEDULE

SYMBOL	MANUF. / MODEL	LOCATION	SERVICE	TYPE	G.P.M.	HEAD IN FT.	ELECTRICAL HP	ELECTRICAL VOLT	ELECTRICAL PHASE	RPM	OPERATING WEIGHT (LBS)	REMARKS
CHP 1	BELL & GOSSETT 90 2A	MECHANICAL ROOM	CHILLED WATER SYSTEM	IN–LINE VERTICAL	42	25	3/4	120	1	1750	85	– OR APPROVED EQUAL – ODP MOTOR
CHP 2	BELL & GOSSETT 90 2A	MECHANICAL ROOM	CHILLED WATER SYSTEM	IN–LINE VERTICAL	42	25	3/4	120	1	1750	85	– OR APPROVED EQUAL – ODP MOTOR – STAND BY

STORAGE TANK

SYMBOL	MANUF. / MODEL	LOCATION	SERVICE	CAPACITY GAL.	DIMENSION DIAMETER	DIMENSION HEIGHT	OPERATING WEIGHT (LBS)	REMARKS
ST 1	WESSELS CBT SERIES	MECHANICAL ROOM	CHILLED WATER SYSTEM	120	24"	60"	1,317	– OR APPROVED EQUAL – WITH BASE RING WITH WELDED ANGLE CLIPS FOR ANCHORING TO SLAB. – NO INTERIOR LINING

EXPANSION TANK SCHEDULE

SYMBOL	MANUF. / MODEL	LOCATION	SERVICE	TYPE	DESIGN CONDITIONS MIN. VOL. GAL.	DESIGN CONDITIONS EXP. VOL. GAL.	DESIGN CONDITIONS ACC.FACT.	MOUNTING	DIMENSION, IN. DIA. (IN.)	DIMENSION, IN. HT. (IN.)	OPERATING WEIGHT (LBS)	REMARKS
ET 1	ARMSTRONG AX–20V	MECHANICAL ROOM	CHILLED WATER SYSTEM	DIAPHRAGM	11	2.8	0.25	VERTICAL	12	26	140	– OR APPROVED EQUAL – WITH BASE RING WITH WELDED ANGLE CLIPS FOR ANCHORING TO SLAB.

AIR SEPARATOR SCHEDULE

SYMBOL	MANUF. / MODEL	LOCATION	SERVICE	GPM	PIPE SIZE	DIMENSION (DIA.X HEIGHT)	OPERATING WEIGHT (LBS)	REMARKS
AS 1	BELL & GOSSETT RL–3F	MECHANICAL ROOM	CHILLED WATER SYSTEM	42	3"	9"X16"	260	– OR APPROVED EQUAL – LESS STRAINER

RECTANGULAR DUCT CONST.

DUCT STATIC PRESSURE 2" W.C. OR LESS

DUCT DIMENSION INCHES	GAGE STEEL	GAGE ALUMINUM	PERMISSIBLE GIRTH JOINTS AND LONGITUDINAL SEAMS
UP THROUGH 12	26	24	SEE TABLE 6–A UMC – 2007
13 THROUGH 18	24	22	SEE TABLE 6–A UMC – 2007
19 THROUGH 30	24	22	SEE TABLE 6–A UMC – 2007
31 THROUGH 42	22	20	SEE TABLE 6–A UMC – 2007
43 THROUGH 54	22	20	SEE TABLE 6–A UMC – 2007
55 THROUGH 60	20	18	SEE TABLE 6–A UMC – 2007
61 THROUGH 84	20	18	SEE TABLE 6–A UMC – 2007
85 THROUGH 96	18	16	SEE TABLE 6–A UMC – 2007
OVER 96	18	16	SEE TABLE 6–A UMC – 2007

ROUND DUCT CONSTRUCTION

DUCT STATIC PRESSURE 2" W.C. OR LESS

DUCT DIMENSION INCHES	GAGE STEEL	GAGE ALUMINUM	PERMISSIBLE GIRTH JOINTS AND LONGITUDINAL SEAMS
UP THROUGH 9	26	24	SEE TABLE 6–B UMC – 2007
10 THROUGH 13	26	24	SEE TABLE 6–B UMC – 2007
14 THROUGH 23	24	22	SEE TABLE 6–B UMC – 2007
24 THROUGH 37	22	20	SEE TABLE 6–B UMC – 2007
38 THROUGH 51	20	18	SEE TABLE 6–B UMC – 2007

AIR DISTRIBUTION SCHEDULE

SYMBOL	CFM	MAX. P.D. INCHES	MAX. NC	NECK SIZE	MANUFACTURER	MODEL	MOUNTING	REMARKS
SD–1	0–200	0.08	30	6"	TITUS	MCD	T–BAR	MODULAR CORE DIFFUSER, STEEL CONSTRUCTION, 24x24 MODULE, WHITE POWDER COAT FINISH.
SD–2	201–310	0.08	30	8"	TITUS	MCD	T–BAR	MODULAR CORE DIFFUSER, STEEL CONSTRUCTION, 24x24 MODULE, WHITE POWDER COAT FINISH.
SD–3	311–500	0.08	30	10"	TITUS	MCD	T–BAR	MODULAR CORE DIFFUSER, STEEL CONSTRUCTION, 24x24 MODULE, WHITE POWDER COAT FINISH.
SD–4	0–200	0.08	30	6"	TITUS	MCD	SURFACE MOUNT	MODULAR CORE DIFFUSER, STEEL CONSTRUCTION, WHITE POWDER COAT FINISH.
SD–5	201–310	0.08	30	8"	TITUS	MCD	SURFACE MOUNT	MODULAR CORE DIFFUSER, STEEL CONSTRUCTION, WHITE POWDER COAT FINISH.
SD–6	311–500	0.08	30	10"	TITUS	MCD	SURFACE MOUNT	MODULAR CORE DIFFUSER, STEEL CONSTRUCTION, WHITE POWDER COAT FINISH.
SD–7	501–600	0.08	30	12"x12"	TITUS	MCD	SURFACE MOUNT	MODULAR CORE DIFFUSER, STEEL CONSTRUCTION, WHITE POWDER COAT FINISH.
SD–8	601–690	0.08	30	14"x14"	TITUS	MCD	SURFACE MOUNT	MODULAR CORE DIFFUSER, STEEL CONSTRUCTION, WHITE POWDER COAT FINISH.
SD–9	691–1400	0.08	30	24"x72"	DUCT SOX	ALL FABRIC D–FUSER	SURFACE MOUNT	SEMI–CIRCULAR FABRIC FACE FACE DIFFUSER (NON–POROUS COATED FABRIC BACK PANEL, PLIABLE AIR POROUS TEXTILE FABRIC FACE, EXTRUDED ALUMINUM MOUNTING FRAME).
RG–1	250–350	0.08	30	10"x10"	TITUS	350 RL	SURFACE MOUNT	LOUVERED FACE, 3/4" BLADE SPACING, 35° DEFLECTION STEEL CONSTRUCTION, WHITE POWDER COAT FINISH.
RG–2	351–530	0.08	30	12"x12"	TITUS	350 RL	SURFACE MOUNT	LOUVERED FACE, 3/4" BLADE SPACING, 35° DEFLECTION STEEL CONSTRUCTION, WHITE POWDER COAT FINISH.
RG–3	531–750	0.08	30	14"x14"	TITUS	350 RL	SURFACE MOUNT	LOUVERED FACE, 3/4" BLADE SPACING, 35° DEFLECTION STEEL CONSTRUCTION, WHITE POWDER COAT FINISH.
RG–4	1750	0.08	30	24"x16"	TITUS	50 F	SURFACE MOUNT	EGGCRATE, STEEL BORDER, ALUMINUM GRID CONSTRUCTION, WHITE POWDER COAT FINISH.
RG–5	7500	0.10	30	42"x38"	TITUS	50 F	SURFACE MOUNT	EGGCRATE, STEEL BORDER, ALUMINUM GRID CONSTRUCTION, WHITE POWDER COAT FINISH.
TG–1	691–750	0.08	30	24"x16"	TITUS	350 RL	SURFACE MOUNT	LOUVERED FACE, 3/4" BLADE SPACING, 35° DEFLECTION STEEL CONSTRUCTION, WHITE POWDER COAT FINISH.

ELECTRIC DUCT HEATER

SYMBOL	MANUF. / MODEL	CFM	KW	SIZE	CAPACITY CONTROL	ELECTRICAL VOLT	ELECTRICAL PH	ELECTRICAL Hz	TYPE	REMARKS
DH 1	INDEECO TYPE QUZ	12,000	35	40"x32"	SCR PROPORTIONAL	480	3	60	FLANGED OPEN COIL	–OR APPROVED EQUAL. –WITH CONTROL ENCLOSURE, AUTOMATIC AND MANUAL RESET THERMAL CUTOUT, LOW WATT DENSITY ELEMENT–HIGH GRADE NICKEL CHROME ALLOY, AIR FLOW SWITCH. –24VAC/50VAC CLASS 2 TRANSFORMER, SINGLE POINT ELECTRICAL CONNECTION, DOOR INTERLOCK DISCONNECT SWITCH, MERCURY CONTACTORS, MAIN SUPPLY FUSES. –HINGED ACCESS DOOR.

DONN C. GILMORE & ASSOCIATES, INC.
Consulting Mechanical and Electrical Engineers
DCGA
4051 E. La Palma Ave., Ste. A
Anaheim, CA 92807
Ph.: 714.630.4291
Fax: 714.630.4805

DATE	SYM	REVISION	BY	A'PD
10–03–11	△	AS-BUILT		

NATIONAL AERONAUTICS AND SPACE ADMINISTRATION
DRYDEN FLIGHT RESEARCH CENTER
EDWARDS, CA

DRAWING TITLE
MECHANICAL
EQUIPMENT SCHEDULES

PROJECT TITLE
CONSTRUCT MIRROR COATING FACILITY
DAOF BUILDING 703
100% FINAL DESIGN

APPROVALS	DATE
Chief, Facilities Engineering & Asset Mgmt. Office	
Project Manager	
Security Office	
Project Requestor	
Safety Office	
Telecom	

DRAWN BY	ANH, JZ, LL	DATE STRTD	4–18–08
W.O. #		DATE PRNTD	4–14–09
PLOT SCALE		TRADE Sht. No.	EDM–1685
CAD FILE NAME		M1	SHEET No. 22 of 40

AS-BUILT

DWG: Z:\Aerospace and Defense\NASA\mirror coating facility\as-built complete\Deliverable\21-EDM-1685-As-Built-M1.dwg USER: Nelson
DATE: Jun 21, 2011 10:36am XREFS: IMAGES:

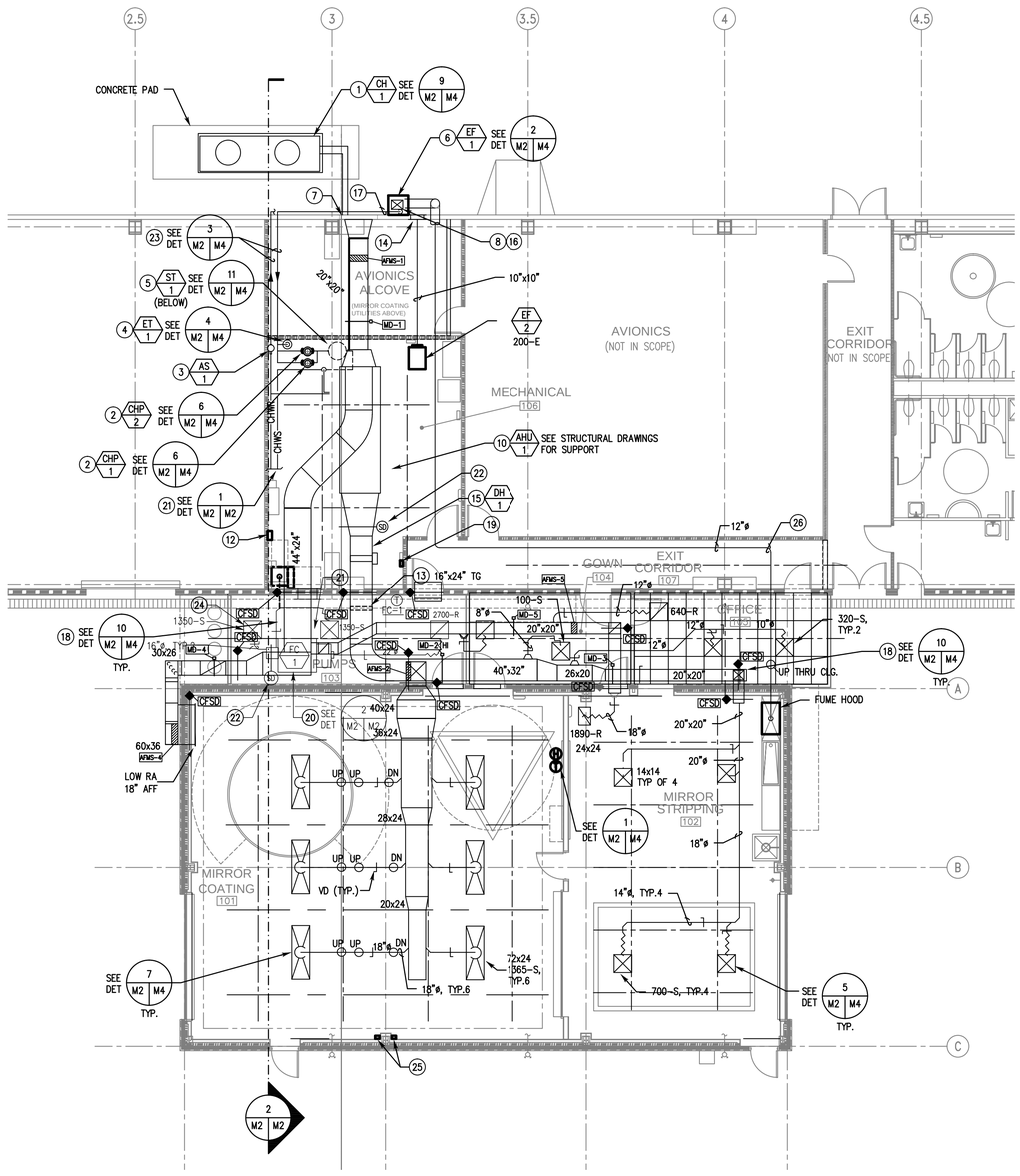

MECHANICAL FLOOR PLAN

SCALE: 1/8" = 1'-0" (3 / M2 M2)

NORTH

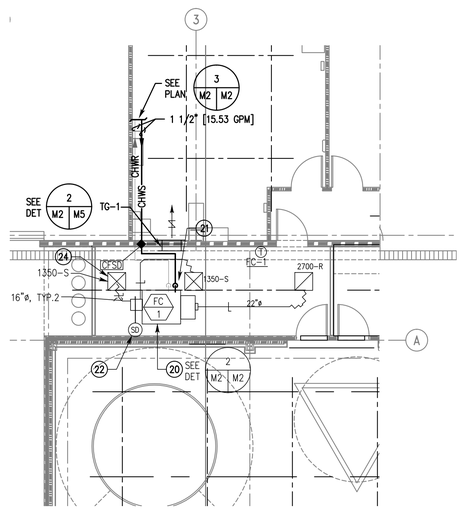

KEY NOTES:

1. PACKAGED CHILLER ON SEISMIC RESTRAINT SPRING ISOLATORS.
2. IN-LINE CHILLED WATER PUMP.
3. AIR SEPARATOR.
4. EXPANSION TANK ANCHORED TO FINISHED FLOOR.
5. STORAGE TANK ANCHORED TO FINISHED FLOOR.
6. EXHAUST FAN MOUNTED ON CONCRETE PAD.
7. 36"x30" OUTSIDE AIR LOUVER, BOTTOM BAT ±16'-11" HIGH FROM FINISHED FLOOR.
8. 12"x9" EXHAUST DUCT, RUN AGAINST (E) WALL AND TERMINATE ABOVE ROOF.
9. SUSPENDED EXHAUST FAN WITH BACKDRAFT DAMPER AT FAN DISCHARGE. PROVIDE 1/4" MESH SCREEN AT FAN INLET. SUPPORT FROM STRUCTURE ABOVE WITH 1/4" THREADED ROD AND VIBRATION ISOLATORS
10. AIR HANDLING UNIT.
11. ELECTRIC HUMIDIFIER.
12. DRAIN COOLER.
13. RAPID-SORB DISPERSION UNIT.
14. 18"x12" EXHAUST AIR LOUVER.
15. ELECTRIC DUCT HEATER.
16. BACKDRAFT DAMPER AT EXHAUST DUCT RISER. LOCATE BACKDRAFT DAMPER 3' FROM CONNECTION TO EXHAUST FAN DISCHARGE.
17. RUN 2 1/2"CHWS & CHWR ALONG WALL.
18. DUCT RISER AGAINST THE WALL.
19. DDC SYSTEM CONTROLLER.
20. FAN COIL LOCATED BELOW MAIN SAD & RAD DUCTWORK IN CEILING SPACE..
21. 1 1/2"CHWS & CHWR TO FC-1.
22. DUCT SMOKE DETECTOR.
23. 2 1/2"CHWS & CHWR ABOVE CEILING SPACE OF AVIONICS ALCOVE
24. 24"x24" ACCESS PANEL.
25. 6"x4" ROOM PRESSURIZATION DISPLAY, MOUNTED 5'-0" ABOVE FINISH FLOOR.
26. 316 STAINLESS STEEL SMOOTH ROUND ELBOW WITH 1.5 TURNING RADIUS. TYPICAL FOR FUME HOOD EXHAUST.
27. EBTRON GT116-PC OR APPROVED EQUAL.

NORTH

MECHANICAL PUMP ROOM FLOOR PLAN

SCALE: 1/8" = 1'-0" (1 / M2 M2)

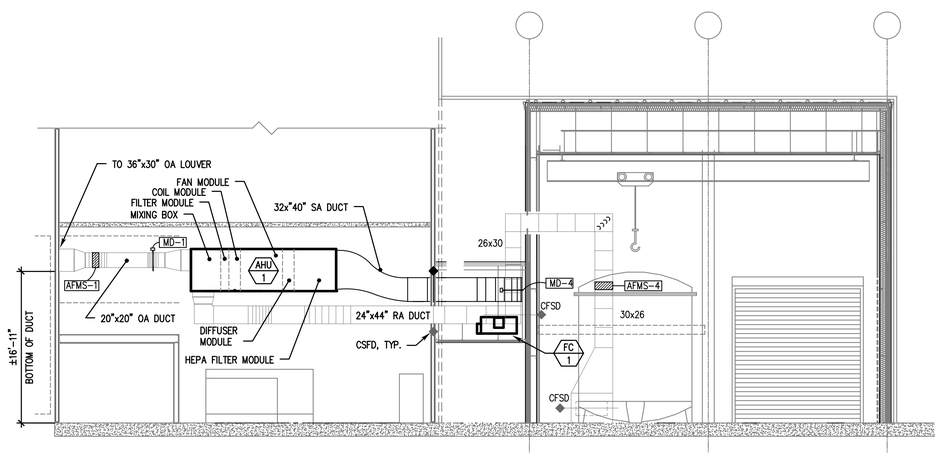

BUILDING SECTION

SCALE: 1/8" = 1'-0" (2 / M2 M2)

DATE	SYM	REVISION	BY	A'PD
10-04-11	△	AS-BUILT		

DONN C. GILMORE & ASSOCIATES, INC.
Consulting Mechanical and Electrical Engineers
DCGA
4051 E. La Palma Ave., Ste. A
Anaheim, CA 92807
Ph.: 714.630.4291
Fax: 714.630.4805

NATIONAL AERONAUTICS AND SPACE ADMINISTRATION
DRYDEN FLIGHT RESEARCH CENTER
EDWARDS, CA

DRAWING TITLE
MECHANICAL FLOOR PLAN

PROJECT TITLE
CONSTRUCT MIRROR COATING FACILITY
DAOF BUILDING 703
100% FINAL DESIGN

APPROVALS	DATE
Chief, Facilities Engineering & Asset Mgmt. Office	
Project Manager	
Security Office	
Project Requestor	
Safety Office	
Telecom	

DRAWN BY	ANH, JZ, LL	DATE STRTD	4-18-08
W.O. #		DATE PRNTD	4-14-09
PLOT SCALE / CAD FILE NAME	TRADE SHL No. M2	EDM-1685	
		SHEET No. 23 of 40	

AS-BUILT

DWG: Z:\Aerospace and Defense\NASA\mirror coating facility\as-built complete\Deliverable\22-EDM-1685-As-Built-M2.dwg USER: Nelson
DATE: Jun 21, 2011 10:42am XREFS: IMAGES:

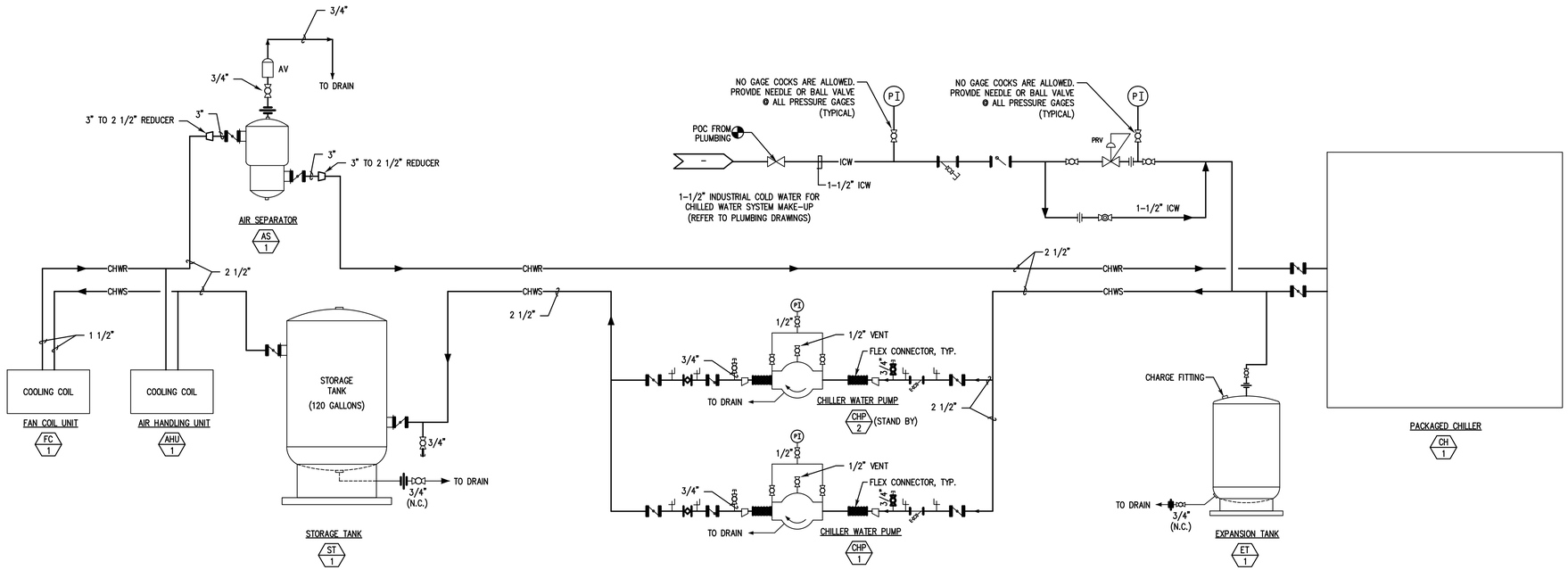

CHILLED WATER PIPING DIAGRAM

SCALE: NONE | 1 M3 M3

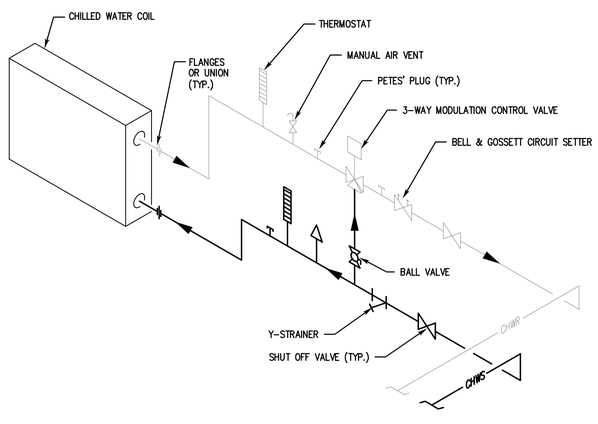

CHILLED WATER COIL PIPING DIAGRAM

SCALE: NONE | 3 M3 M3

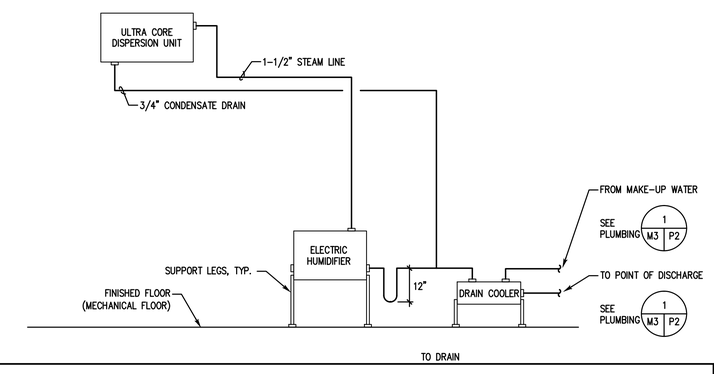

ELECTRIC HUMIDIFIER PIPING DIAGRAM

SCALE: NONE | 2 M3 M3

DATE	SYM	REVISION	BY	A'PD
05-03-11	△	AS-BUILT		

DONN C. GILMORE & ASSOCIATES, INC.
Consulting Mechanical and Electrical Engineers
DCGA
4051 E. La Palma Ave., Ste. A
Anaheim, CA 92807
Ph.: 714.630.4291
Fax: 714.630.4805

NATIONAL AERONAUTICS AND SPACE ADMINISTRATION
DRYDEN FLIGHT RESEARCH CENTER
EDWARDS, CA

DRAWING TITLE
MECHANICAL PIPING DIAGRAMS

PROJECT TITLE
CONSTRUCT MIRROR COATING FACILITY
DAOF BUILDING 703
100% FINAL DESIGN

APPROVALS	DATE
Chief, Facilities Engineering & Asset Mgmt. Office	
Project Manager	
Security Office	
Project Requestor	
Safety Office	
Telecom	

DRAWN BY	ANH, JZ, LL	DATE STRTD	4-18-08
W.O. #		DATE PRNTD	4-14-09
PLOT SCALE		TRADE SH. No.	M3
CAD FILE NAME		SHEET No. 24 of 40	EDM-1685

AS-BUILT

DWG: Z:\Aerospace and Defense\NASA\mirror coating facility\as-built complete\Deliverable\23-EDM-1685-As-Built-M3.dwg USER: Nelson
DATE: Jun 21, 2011 10:45am XREFS: IMAGES:

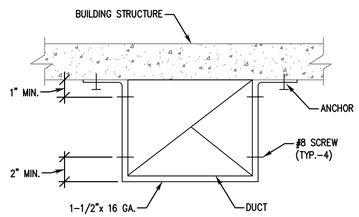

WALL DUCT SUPPORT DETAIL

SCALE: NONE | 10 M4 M2

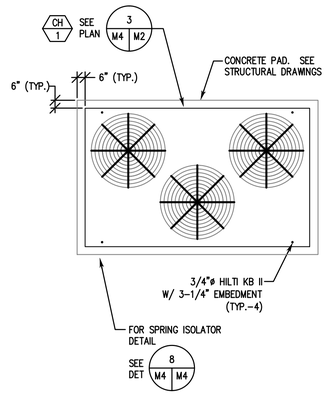

CHILLER SUPPORT DETAIL

SCALE: NONE | 9 M4 M2

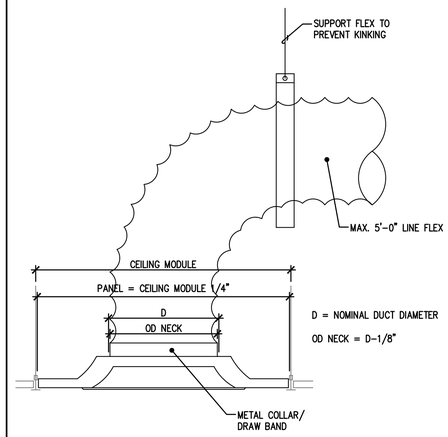

CEILING DIFFUSER DETAIL

SCALE: NONE | 5 M4 M2

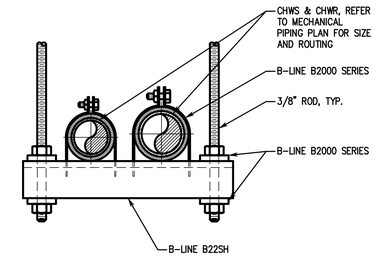

NOTE:

1. SIZE STRUT AND CLAMP TO ADEQUATELY SUPPORT LOAD (REFER TO B-LINE STRUT CATALOG).
2. B2000 IN ZINC PLATED, HOT-DIP GALVANIZED.

PIPING SUPPORT DETAIL

SCALE: NONE | 3 M4 M2

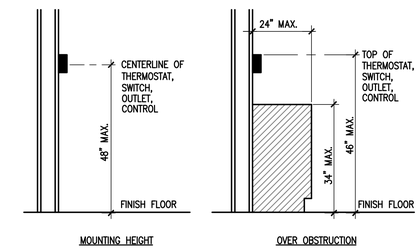

THERMOSTAT/HUMIDISTAT MTG. DETAIL

SCALE: NONE | 1 M4 M2

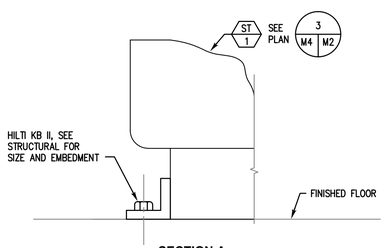

SECTION A

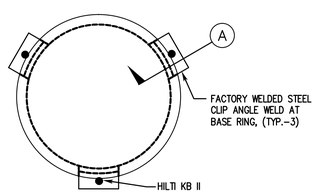

PLAN VIEW

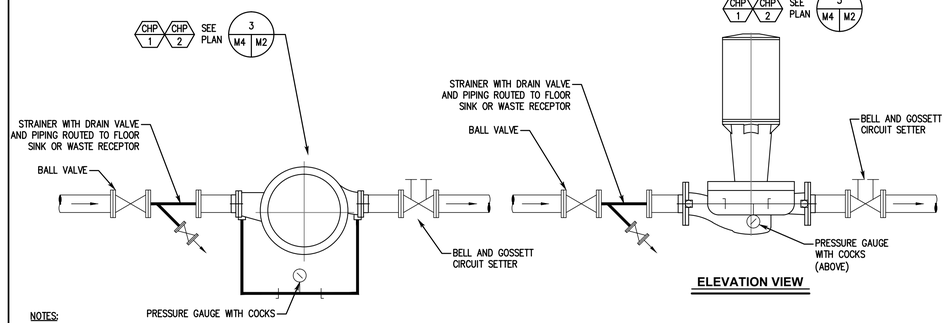

NOTES:

1. NO PIPING SHALL BE SUPPORTED BY PUMP.

PLAN VIEW

ELEVATION VIEW

IN-LINE PUMP DETAIL

SCALE: NONE | 6 M4 M2

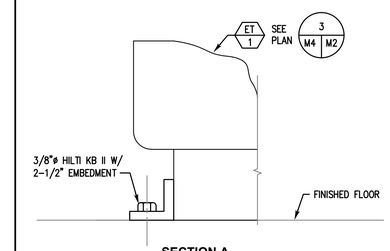

SECTION A

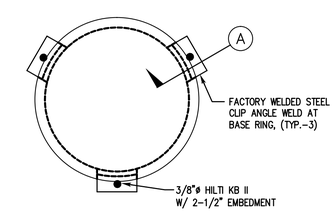

PLAN VIEW

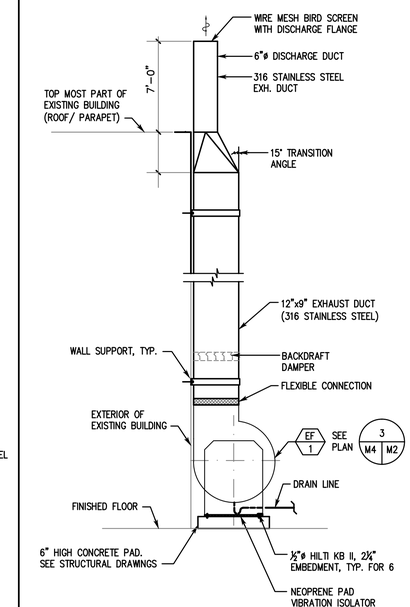

ELEVATION

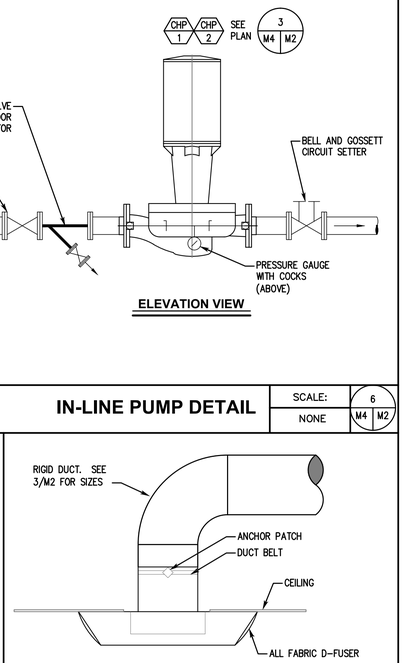

ALL FABRIC D-FUSER DETAIL

SCALE: NONE | 7 M4 M2

EXPANSION TANK DETAIL

SCALE: NONE | 4 M4 M2

EXHAUST FAN DETAIL (FUME HOOD)

SCALE: NONE | 2 M4 M2

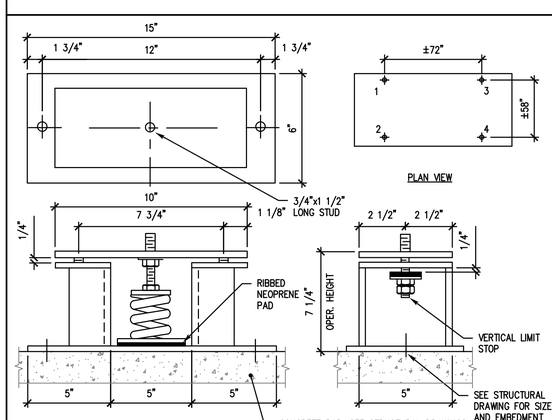

NOTE:

1. FOR ANCHORAGE USE 1/2" DIA HILTI KB-TZ AANCHORS, MIN 2" EMBEDMENT, MIN 4" CONC THICK'S, MIN 5-3/4" EDGE DISTANCE, IN MIN 3000 PSI RW CONCRETE. INSTALL PER ICC ESR-1917

STORAGE TANK DETAIL

SCALE: NONE | 11 M4 M2

CHILLER SPRING ISOLATOR DETAIL

SCALE: NONE | 8 M4 M4

DONN C. GILMORE & ASSOCIATES, INC.
Consulting Mechanical and Electrical Engineers
DCGA
4051 E. La Palma Ave., Ste. A
Anaheim, CA 92807
Ph.: 714.630.4291
Fax: 714.630.4805

DATE	SYM	REVISION	BY	A'PD
12-01-11	△	AS-BUILT		

NATIONAL AERONAUTICS AND SPACE ADMINISTRATION
DRYDEN FLIGHT RESEARCH CENTER
EDWARDS, CA

DRAWING TITLE
MECHANICAL DETAILS

PROJECT TITLE
CONSTRUCT MIRROR COATING FACILITY
DAOF BUILDING 703
100% FINAL DESIGN

APPROVALS	DATE
Chief, Facilities Engineering & Asset Mgmt. Office	
Project Manager	
Security Office	
Project Requestor	
Safety Office	
Telecom	

DRAWN BY	ANH, JZ, LL	DATE STRTD	4-18-08
W.O. #		DATE PRNTD	4-14-09
PLOT SCALE / CAD FILE NAME	TRADE SH. No. M4	EDM-1685	
		SHEET No. 25 of 40	

AS-BUILT

DWG: Z:\Aerospace and Defense\NASA\mirror coating facility\as-built complete\Deliverable\24-EDM-1685-As-Built-M4.dwg USER: Nelson
DATE: Jun 21, 2011 10:48am XREFS: IMAGES:

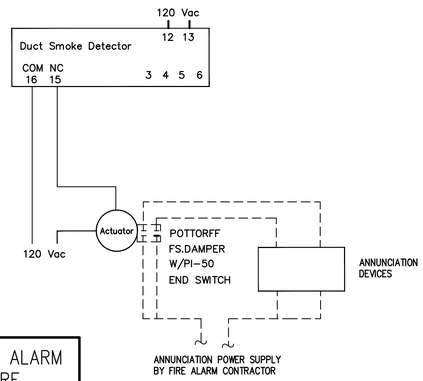

TO BE COORDINATED WITH THE FIRE ALARM CONTRACTOR FOR TIE-IN TO THE FIRE ALARM SYSTEM

COMBINATION F / S DAMPER WIRING DIAGRAM

SCALE: NONE | 3 M5 M5

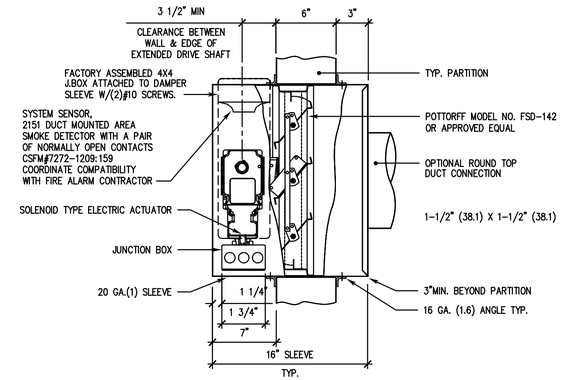

FIRE/SMOKE DAMPER SPECIFICATIONS:

ALL FIRESMOKE DAMPERS SHALL BE LABELED AND LISTED BY CALIFORNIA STATE FIRE MARSHAL AND/OR UNDERWRITERS LABORATORIES. ALL DAMPERS MUST ALSO BE LEAKAGE RATED AND LABELED UNDER UNDERWRITER LABORATORIES STD. 555S. WITH SILICON SEALS ALLOWING NO MORE THAN 10 CFM/SQ.FT. AT 1" W.G. TO 350°F FOR A FULL 30 MIN. MOTOR OPERATED. TORQUE REQ'D. TO MAINTAIN LEAKAGE RATE NOT TO EXCEED 0 LBS. TORQUE. DAMPERS SHALL BE INSTALLED PER MANUFACTURERS INSTALLATION INSTRUCTIONS AND/OR STATE FIRE MARSHAL LISTING NO. 03225. POTTORFF COMPANY, INC. (LISTING # 03225:0368:110 AND 03230:0368:111) PROVIDE NON STALL SOLENOID MOTOR , 64 VA. MAXIMUM. TESTED FOR 1 YEAR CONTINUOUS POWER APPLICATIONS SUCH AS BELIMO CAPABLE TO REOPEN DAMPER REGARDLESS OF POWER FAILURE LENGTH OF TIME. PROVIDE 5 YEAR DAMPER AND ACTUATOR WARRANTY.

THIS PRODUCT IS LISTED BY CSFM FILE # 3225-0368:110

ACTUATORS SHALL BE 120V.

COMBINATION FIRE / SMOKE DAMPER THRU WALL DETAIL

SCALE: NONE | 1 M5 M2

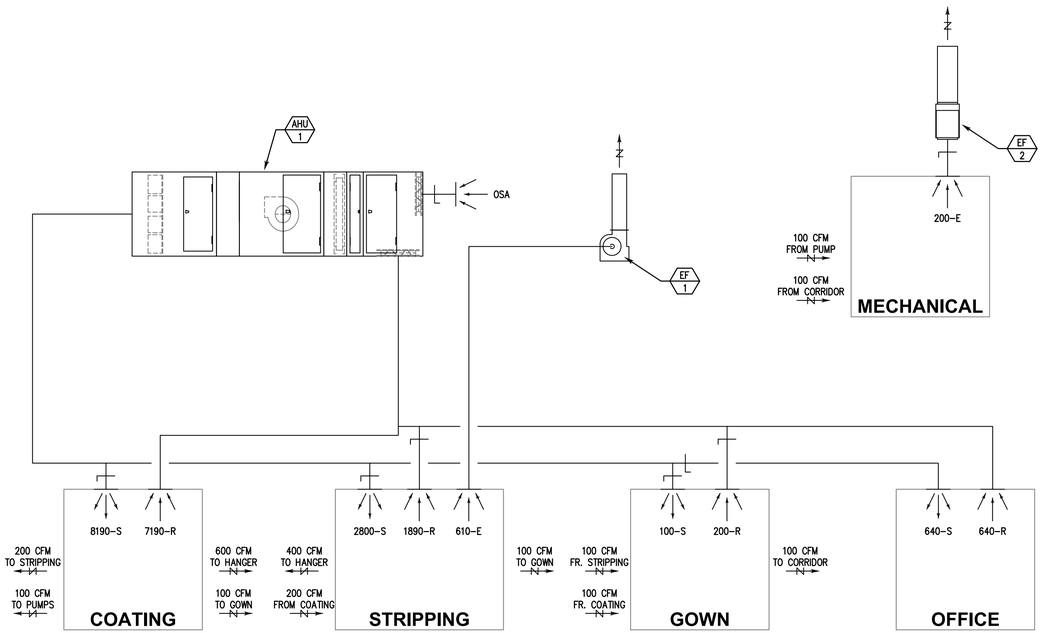

AIR FLOW DIAGRAM

SCALE: NONE | 4 M5 M2

FIRE/SMOKE DAMPER SPECIFICATIONS:

ALL FIRESMOKE DAMPERS SHALL BE LABELED AND LISTED BY CALIFORNIA STATE FIRE MARSHAL AND/OR UNDERWRITERS LABORATORIES. ALL DAMPERS MUST ALSO BE LEAKAGE RATED AND LABELED UNDER UNDERWRITER LABORATORIES STD. 555S. WITH SILICON SEALS ALLOWING NO MORE THAN 10 CFM/SQ.FT. AT 1" W.G. TO 350° F FOR A FULL 30 MIN. MOTOR OPERATED. TORQUE REQ'D. TO MAINTAIN LEAKAGE RATE NOT TO EXCEED 0 LBS. TORQUE. DAMPERS SHALL BE INSTALLED PER MANUFACTURERS INSTALLATION INSTRUCTIONS AND/OR STATE FIRE MARSHAL LISTING NO. 03225. POTTORFF COMPANY, INC. (LISTING # 03225:0368:110 AND 03230:0368:111) PROVIDE NON STALL SOLENOID MOTOR , 64 VA. MAXIMUM. TESTED FOR 1 YEAR CONTINUOUS POWER APPLICATIONS SUCH AS BELIMO CAPABLE TO REOPEN DAMPER REGARDLESS OF POWER FAILURE LENGTH OF TIME. PROVIDE 5 YEAR DAMPER AND ACTUATOR WARRANTY.

TO BE COORDINATED WITH THE FIRE ALARM CONTRACTOR FOR TIE-IN TO THE FIRE ALARM SYSTEM

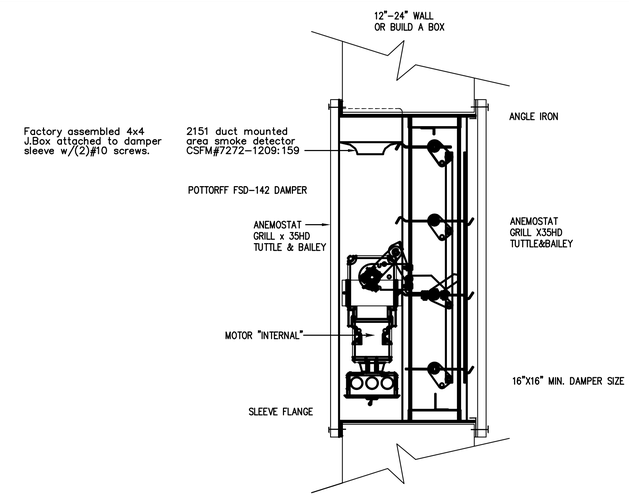

COMBINATION FIRE / SMOKE DAMPER - TRANSFER GRILLE DETAIL

SCALE: NONE | 2 M5 M2

DATE	SYM	REVISION	BY	A'PD
10-03-11	△	AS-BUILT		

DONN C. GILMORE & ASSOCIATES, INC.
Consulting Mechanical and Electrical Engineers
DCGA
4051 E. La Palma Ave., Ste. A
Anaheim, CA 92807
Ph.: 714.630.4291
Fax: 714.630.4805

NATIONAL AERONAUTICS AND SPACE ADMINISTRATION
DRYDEN FLIGHT RESEARCH CENTER
EDWARDS, CA

DRAWING TITLE
MECHANICAL DETAILS

PROJECT TITLE
CONSTRUCT MIRROR COATING FACILITY
DAOF BUILDING 703
100% FINAL DESIGN

APPROVALS	DATE
Chief, Facilities Engineering & Asset Mgmt. Office	
Project Manager	
Security Office	
Project Requester	
Safety Office	
Telecom	

DRAWN BY	ANH, JZ, LL	DATE STRTD	4-18-08
W.O. #		DATE PRNTD	4-14-09
PLOT SCALE / CAD FILE NAME	TRADE Sht. No. M5	EDM-1685	

SHEET No. 26 of 40

AS-BUILT

DWG: Z:\Aerospace and Defense\NASA\mirror coating facility\as-built complete\Deliverable\25-EDM-1685-As-Built-M5.dwg USER: Nelson
DATE: Jun 21, 2011 10:50am XREFS: IMAGES:

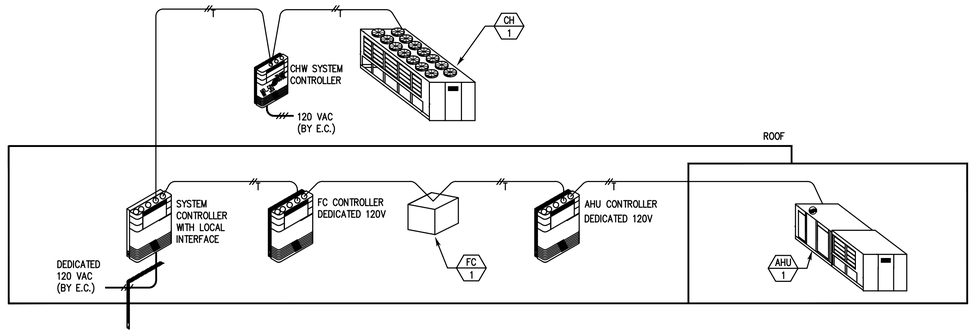

NOTES:

1. ALL LOW VOLTAGE CABLE THE RESPONSIBILITY OF THE CONTROLS CONTRACTOR.
2. REFER TO POINTS LIST FOR ALL POINTS REQUIRED FOR MONITORING AND CONTROL AT THE BUILDING AUTOMATION SYSTEM.
3. LOCATION OF BCU TO BE FIELD VERIFIED.
4. DIVISION 26000 ELECTRICAL CONTRACTOR TO COORDINATE WITH CONTROLS CONTRACTOR TO VERIFY EXACT QUANTITY AND LOCATION OF EMS PANELS REQUIRING 120 VAC POWER.
5. ALL UNDERGROUND/OVERHEAD CONDUIT BETWEEN BUILDINGS IS THE RESPONSIBILTY OF THE ELECTRICAL CONTRACTOR UNDER DIVISION 26000.

#22 AWG TWISTED NON-SHIELDED 2-CONDUCTOR CABLE

E.C. = DIVISION 26000 ELECTRICAL CONTRACTOR

WIRING BY E.C. = DIVISION 26000 ELECTRICAL CONTRACTOR

#18 AWG TWISTED SHIELDED 2-CONDUCTOR CABLE

C.C. = CONTROLS/BAS CONTRACTOR

LEGEND

AI = ANALOG INPUT
AO = ANALOG OUTPUT
BCU = BUILDING CONTROL UNIT
BI = BINARY INPUT
BO = BINARY OUTPUT
C.C. = CONTROLS CONTRACTOR
CSS = CURRENT SENSING SWITCH
CSS/R = CURRENT SENSING SWITCH/RELAY
DA = DAMPER ACTUATOR
DC = DATA CONVERTER
DP = DIFFERENTIAL PRESSURE SWITCH
DPT = DIFFERENTIAL PRESSURE TRANSDUCER
FMS = FLOW MEASURING STATION
E.C. = DIVISION 26000 ELECTRICAL CONTRACTOR
HE = HUMIDITY SENSING ELEMENT
LPM = LIGHTENING PROTECTION MODULE
SLL = STATIC LOW LIMIT MANUAL SAFETY
SPT = STATIC PRESSURE TIP
S/S = START/STOP
TE = TEMPERATURE SENSING ELEMENT
VA = VALVE/ACTUATOR
PET = PRESSURE TO ELECTRIC TRANSDUCER
SD = SMOKE DETECTOR
SHL = STATIC HIGH LIMIT MANUAL SAFETY

COMMUNICATION RISER DIAGRAM

SCALE: NONE | 2 M6 M6

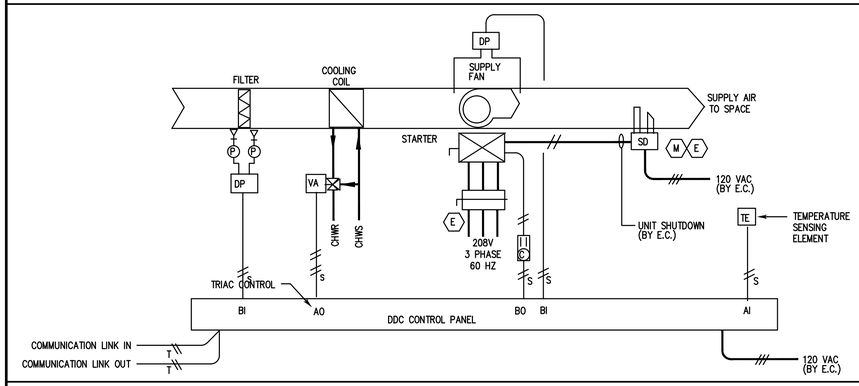

#22 AWG TWISTED NON-SHIELDED 2-CONDUCTOR CABLE

#18 AWG TWISTED SHIELDED 2-CONDUCTOR CABLE

E = E.C. = DIVISION 26000 ELECTRICAL CONTRACTOR

M = M.C. = DIVISION 23000 MECHANICAL CONTRACTOR

C.C. = CONTROLS/BAS CONTRACTOR

1. SMOKE DETECTORS FURNISHED AND INSTALLED BY DIVISION 23000
2. POWER WIRING BY DIV. 26000

FAN COIL COMMUNICATION RISER DIAGRAM

SCALE: NONE | 3 M6 M6

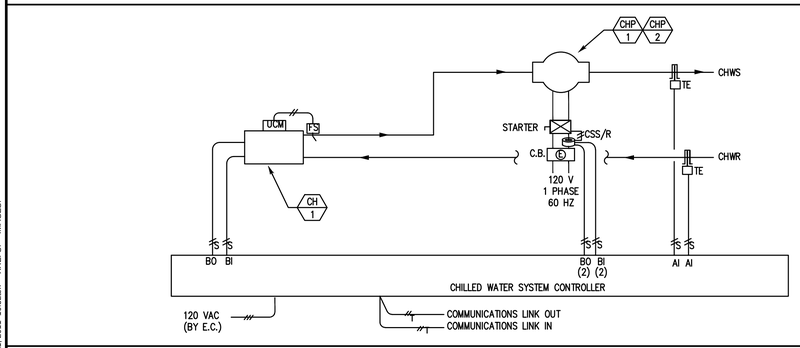

#22 AWG TWISTED NON-SHIELDED 2-CONDUCTOR CABLE

#18 AWG TWISTED SHIELDED 2-CONDUCTOR CABLE

E = E.C. = DIVISION 26000 ELECTRICAL CONTRACTOR

C.C. = CONTROLS CONTRACTOR

CHILLED WATER SYSTEM CONTROL DIAGRAM

SCALE: NONE | 4 M6 M6

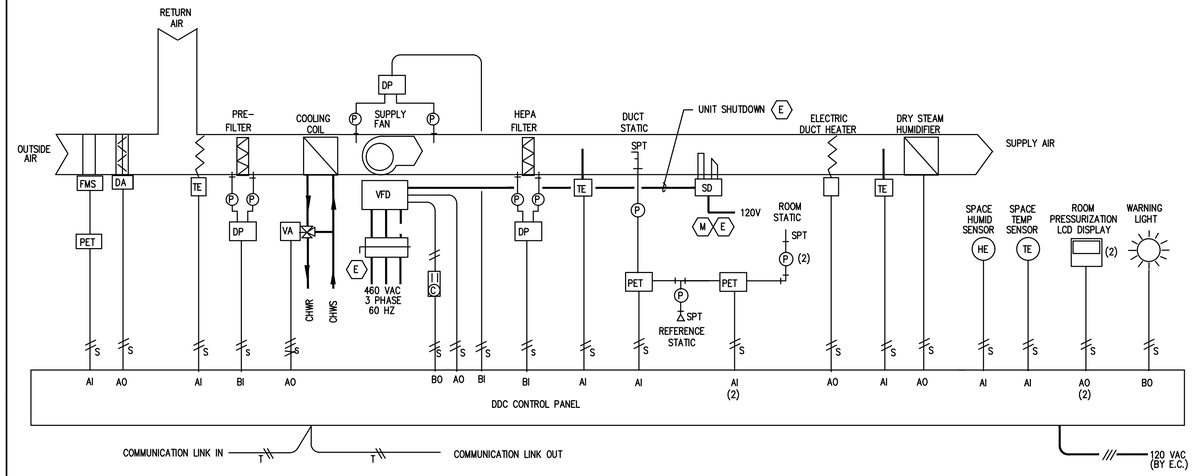

#22 AWG TWISTED NON-SHIELDED 2-CONDUCTOR CABLE

#18 AWG TWISTED SHIELDED 2-CONDUCTOR CABLE

E = E.C. = DIVISION 26000 ELECTRICAL CONTRACTOR

M = M.C. = DIVISION 23000 MECHANICAL CONTRACTOR

1. SMOKE DETECTORS FURNISHED AND INSTALLED BY DIVISION 23000
2. POWER WIRING BY DIV. 26000

SEQUENCE OF OPERATIONS:
AHU WITH ELECTRIC HEAT/HYDRONIC COOLING (WITH HUMIDIFICATION)

BUILDING AUTOMATION SYSTEM INTERFACE:

THE BUILDING AUTOMATION SYSTEM (BAS) WILL SEND THE CONTROLLER OCCUPIED, UNOCCUPIED, OPTIMAL START, NIGHT HEAT / COOL, AND TIMED OVERRIDE COMMANDS. THE BAS MAY ALSO SEND A HEAT / COOL MODE, SPACE TEMPERATURE AND/OR SPACE TEMPERATURE SETPOINT. IF A BAS IS NOT PRESENT, OR COMMUNICATION IS LOST WITH THE BAS, THE CONTROLLER WILL OPERATE USING ITS LOCAL SCHEDULE AND SETPOINTS.

HEAT/COOL MODE:

WHEN THE SPACE TEMPERATURE RISES ONE DEGREE ABOVE THE OCCUPIED COOLING SETPOINT THE MODE WILL TRANSITION TO COOLING. WHEN THE SPACE TEMPERATURE FALLS ONE DEGREE BELOW THE OCCUPIED HEATING SETPOINT THE MODE WILL TRANSITION TO HEATING. WHEN THE SPACE TEMPERATURE IS BETWEEN ONE DEGREE ABOVE THE OCCUPIED COOLING SETPOINT AND ONE DEGREE BELOW THE OCCUPIED HEATING SETPOINT THE MODE WILL REMAIN IN ITS LAST STATE. IF THE SPACE TEMPERATURE SENSOR FAILS THE MODE WILL REMAIN IN ITS LAST STATE AND AN ALARM WILL BE ANNUNCIATED. IF THE LOCAL (AND COMMUNICATED) SETPOINT(S) FAIL THE CONTROLLER WILL USE ITS DEFAULT SETPOINTS AND AN ALARM WILL BE ANNUNCIATED.

OCCUPIED (TEMPERATURE CONTROL):

DURING OCCUPIED PERIODS, THE SUPPLY FAN WILL RUN CONTINUOUSLY AND THE OUTSIDE AIR DAMPER WILL OPEN TO MAINTAIN MINIMUM VENTILATION REQUIREMENTS. THE HYDRONIC COOLING VALVE WILL MODULATE AND THE ELECTRIC HEAT WILL STAGE TO MAINTAIN THE DISCHARGE AIR TEMPERATURE SETPOINT. THE DISCHARGE AIR TEMPERATURE SETPOINT WILL BE DYNAMICALLY RESET BASED ON THE DEVIATION OF ACTUAL SPACE TEMPERATURE FROM THE ACTIVE SPACE TEMPERATURE SETPOINT. IF THE DISCHARGE AIR TEMPERATURE SENSOR FAILS, THE HYDRONIC COOLING VALVE WILL MODULATE AND THE ELECTRIC HEAT WILL STAGE TO MAINTAIN THE ACTIVE SPACE TEMPERATURE SETPOINT AND AN ALARM WILL BE ANNUNCIATED. IF THE DISCHARGE AIR TEMPERATURE SENSOR AND THE SPACE TEMPERATURE SENSOR FAIL, THE HYDRONIC COOLING VALVE WILL CLOSE, THE ELECTRIC HEAT WILL DE-ENERGIZE AND AN ALARM WILL BE ANNUNCIATED.

OCCUPIED (HUMIDITY CONTROL):

IF THE SPACE RELATIVE HUMIDITY IS LESS THAN 50% (ADJ.), THE DRI-STEAM HUMIDIFIER WILL MODULATE TO INCREASE THE SPACE RELATIVE HUMIDITY. MODE WILL TERMINATE WHEN THE SPACE RELATIVE HUMIDITY RAISES ABOVE THE RELATIVE HUMIDITY SETPOINT (50% ADJ) MINUS 10% (ADJ.). IF THE SPACE RELATIVE HUMIDITY SENSOR FAILS THE HUMIDIFICATION SEQUENCE WILL BE TERMINATED AND AN ALARM WILL BE ANNUNCIATED.

SUPPLY FAN:

THE FAN WILL BE OFF IN THE UNOCCUPIED MODE. WHEN THE CONTROLLER IS IN THE OCCUPIED MODE, THE SUPPLY FAN WILL OPERATE CONTINUOUSLY AND ITS SPEED WILL BE MODULATED TO MAINTAIN THE DUCT STATIC PRESSURE SETPOINT. THE DUCT STATIC PRESSURE SETPOINT IS A PRESET VALUE. OVER TIME THE FAN WILL RAMP UP TO COMPENSATE FOR THE LOADING OF THE HEPA FILTER.

IF THE SUPPLY FAN FAILS TO PROVE STATUS FOR 30 SECONDS (ADJ.), THE FAN WILL BE COMMANDED OFF, THE OUTSIDE AIR DAMPER AND ALL VALVES WILL CLOSE AND AN ALARM WILL BE ANNUNCIATED. A MANUAL RESET IS REQUIRED TO RESTART THE FAN. A HARDWIRED, HIGH STATIC PRESSURE CUT-OFF SWITCH IS ELECTRICALLY INTERLOCKED WITH THE VARIABLE SPEED DRIVE. IF THE HIGH STATIC PRESSURE CUT-OFF SWITCH IS TRIPPED THE FAN WILL STOP, THE OUTSIDE AIR DAMPER AND ALL VALVES WILL CLOSE AND AN ALARM WILL BE ANNUNCIATED. A MANUAL RESET OF THE HIGH STATIC PRESSURE CUT-OFF SWITCH WILL BE REQUIRED TO RESTART THE FAN.

FILTER STATUS:

A DIFFERENTIAL PRESSURE SWITCH WILL MONITOR THE DIFFERENTIAL PRESSURE ACROSS THE FILTER WHEN THE FAN IS RUNNING. IF THE SWITCH CLOSES DURING NORMAL OPERATION A DIRTY FILTER ALARM WILL BE ANNUNCIATED.

PRESSURIZATION MONITORING:

DIFFERENTIAL PRESSURE MONITORING WILL BE PROVIDED FOR THE MIRROR COATING AND MIRROR STRIPPING ROOMS. EACH ROOM WILL HAVE A ROOM STATIC PRESSURE TRANSMITTER WITH THE REFERENCE STATIC PRESSURE TRANSMITTER IN THE HANGAR SPACE. A DIFFERENTIAL PRESSURE LCD DISPLAY WILL BE PROVIDED FOR EACH ROOM AND BOTH WILL BE LOCATED INSIDE THE MIRROR COATING ROOM. SEE MECHANICAL FLOOR PLAN 3/M2.

SMOKE SHUTDOWN:

UPON DETECTION OF SMOKE, BY SMOKE DETECTOR (SD), WILL SHUT DOWN AHU AND CONTACTS WILL CLOSE TO ALLOW LOW VOLTAGE CIRCUIT TO NOTIFY FIRE ALARM SYSTEM THAT COMBINATION SMOKE/FIRE DAMPER HAS CLOSED.

AIR HANDLING UNIT CONTROL DIAGRAM

SCALE: NONE | 1 M6 M6

DATE	SYM	REVISION	BY	A'PD
10-03-11	△	AS-BUILT		

DONN C. GILMORE & ASSOCIATES, INC.
Consulting Mechanical and Electrical Engineers
DCGA
4051 E. La Palma Ave., Ste. A
Anaheim, CA 92807
Ph.: 714.630.4291
Fax: 714.630.4805

NATIONAL AERONAUTICS AND SPACE ADMINISTRATION
DRYDEN FLIGHT RESEARCH CENTER
EDWARDS, CA

DRAWING TITLE
MECHANICAL CONTROL DIAGRAMS

PROJECT TITLE
CONSTRUCT MIRROR COATING FACILITY
DAOF BUILDING 703
100% FINAL DESIGN

APPROVALS	DATE
Chief, Facilities Engineering & Asset Mgmt. Office	
Project Manager	
Security Office	
Project Requestor	
Safety Office	
Telecom	

DRAWN BY	ANH, JZ, LL	DATE STRTD	4-18-08
W.O. #		DATE PRNTD	4-14-09
PLOT SCALE / CAD FILE NAME	TRADE SIG. No. M6	EDM-1685	
		SHEET No. 27 of 40	

AS-BUILT

DWG: Z:\Aerospace and Defense\NASA\mirror coating facility\as-built complete\Deliverable\26-EDM-1685-As-Built-M6.dwg USER: Nelson
DATE: Jun 21, 2011 10:52am XREFS: IMAGES:

PLUMBING GENERAL NOTES

1. THE PLUMBING SYSTEM DESIGN, INSTALLATION AND MATERIALS SHALL CONFORM IN COMPLIANCE WITH THE FOLLOWING CODES AND STANDARDS AS ADOPTED AND AMENDED BY THE AUTHORITY HAVING JURISDICTION. NOTHING IN THESE DRAWINGS IS TO BE CONSTRUED TO PERMIT WORK NOT CONFORMING TO THESE CODES OR OTHER APPLICABLE TO THIS PROJECT. THE EDITION OF THE CALIFORNIA CODE OF REGULATIONS, TITLE 24 (CALIFORNIA BUILDING STANDARDS CODE) APPLIES TO ALL OCCUPANCIES AND CONSISTS OF THE FOLLOWING PARTS:

   A. PART 1 – 2007 CALIFORNIA BUILDING STANDARDS ADMINISTRATIVE CODE
   B. PART 2 – 2007 CALIFORNIA BUILDING CODE
   C. PART 3 – 2007 CALIFORNIA ELECTRICAL CODE
   D. PART 4 – 2007 CALIFORNIA MECHANICAL CODE
   E. PART 5 – 2007 CALIFORNIA PLUMBING CODE
   F. PART 6 – 2007 CALIFORNIA ENERGY CODE
   G. PART 9 – 2007 CALIFORNIA FIRE CODE
   H. PART 10 –2007 CALIFORNIA CODE FOR BUILDING CONSERVATION

2. PLUMBING QUALITY AND WEIGHTS OF MATERIALS, ALTERNATE METHODS OF CONSTRUCTION SHALL CONFORM TO CHAPTER 3 OF THE 2007 CALIFORNIA PLUMBING CODE.
3. CONTRACTOR SHALL COORDINATE ALL WORK SHOWN ON THESE DRAWINGS AND SPECIFICATIONS WITH ALL DISCIPLINES AND TRADES PRIOR TO SUBMITTAL OF BID AND INSTALLATION OF SYSTEM.
4. ALL PLUMBING FIXTURE LOCATIONS (WATER CLOSETS, LAVATORIES ETC.) ARE DIAGRAMMATIC AND CONTRACTOR SHALL REFER TO ARCHITECTURAL DRAWINGS FOR HANDICAP FIXTURES, EXACT LOCATIONS, MOUNTING HEIGHTS AND COLOR.
5. ANY DEVIATIONS FROM THE DRAWINGS OR SPECIFICATIONS SHALL BE BROUGHT TO THE ATTENTION OF THE CONTRACTING OFFICER PRIOR TO INSTALLATION.
6. THESE DRAWINGS DO NOT INCLUDE ALL NECESSARY SAFETY REQUIREMENTS. CONTRACTOR TO COMPLY TO SAFETY REQUIREMENTS SET FORTH BY CITY OF PALMDALE AND L.A. COUNTY FIRE LIFE AND SAFETY AND NASA SAFETY OFFICE.
7. CONTRACTOR SHALL VISIT THE PROJECT SITE PRIOR TO SUBMITTAL OF BID, FAMILIARIZE HIMSELF WITH EXISTING CONDITIONS AND DETAILS OF THE WORK, VERIFY DIMENSIONS IN THE FIELD AND ADVISE THE ARCHITECT AND ENGINEER OF ANY DISCREPANCY. SUBMITTAL OF BID WILL VERIFY THAT THE CONTRACTOR HAS VISITED THE SITE.
8. TRAP PRIMERS FOR FLOOR DRAINS AND FLOOR SINKS AND WATER HAMMER ARRESTORS TO BE INSTALLED AS PER THE 2007 CPC AND THE LATEST EDITION OF THE AMERICAN SOCIETY OF SANITARY ENGINEERING (ASSE 1010) SIZING AND INSTALLATION REQUIREMENTS.
9. ALL SERVICE WATER HEATING EQUIPMENT TO BE IN COMPLIANCE WITH THE MODEL ENERGY CODE, REQUIREMENTS AND LABELED.
10. CONTRACTOR TO REFER TO PLUMBING FIXTURE SCHEDULE FOR INDIVIDUAL WASTE, VENT & WATER CONNECTIONS AT EACH PLUMBING FIXTURE.
11. ALL HOT & COLD WATER PIPING TO BE INSULATED AS PER 2007 CPC CODE REQUIREMENTS:

PIPE SIZE	INSULATION THICKNESS	INSULATION VALUE
1/2" – 1"	1"	R = 4.0
1–1/4" – 4"	1–1/2"	R = 4.0

12. TEST SYSTEM(S) IN ACCORDANCE WITH REQUIREMENTS OF THE GOVERNING AUTHORITIES.
13. STEEL PLATE SUPPORTS FOR ALL WALL FIXTURES: SUPPORT WITH 3/8" THICK x 8" HIGH STEEL PLATES RECESSED AND BOLTED TO STUDS AND TAPPED FOR FIXTURE BOLTS. LENGTH OF PLATE AT LEAST ON STUD BEYOND FIXTURE, UNLESS CARRIERS ARE SPECIFIED.
14. ALL PLUMBING WORK SHALL BE INSTALLED SO AS TO AVOID INTERFERENCE WITH ELECTRICAL AND MECHANICAL EQUIPMENT AND STRUCTURAL FRAMING.
15. ALL INDIRECT WASTE PIPING ON ROOF SHALL BE TYPE "M" COPPER NAILED TO 2" x 4" REDWOOD BLOCKING WITH PIPE STRAPS. BLOCKING SHALL BE SET IN MASTIC AT 6'–0" O.C. PIPING SHALL BE SLOPED TO AND TERMINATED AT AN APPROVED RECEPTOR.
16. ALL CLEANOUTS SHALL BE INSTALLED WHERE READILY ACCESSIBLE AND LOCATED AS PER CODE REQUIREMENTS. THE CONTRACTOR SHALL COORDINATE ALL CLEAN OUT LOCATIONS WITH EQUIPMENT, CABINETS, ETC., AND THE ARCHITECT PRIOR TO ANY INSTALLATION.
17. ALL PLUMBING FIXTURE VENTS TO TERMINATE A MIN. OF 12 INCHES FROM ANY VERTICAL SURFACE AND 25 FEET FROM OR TERMINATED 3'–0" ABOVE ANY OUTSIDE AIR INTAKES.
18. ALL PIPING DISCHARGING INTO FLOOR–SINKS AND/OR FLOOR–DRAINS TO HAVE A MINIMUM AIRGAP AS REQUIRED BY LOCAL CODES.
19. ALL VALVES, UNIONS, ETC. TO BE SAME SIZE AS LINE SIZE UNLESS OTHERWISE INDICATED ON DRAWINGS.
20. UNIONS SHALL BE PROVIDED AND INSTALLED AFTER EACH SCREW–TYPE VALVE AND PRIOR TO EQUIPMENT CONNECTIONS.
21. ALL EQUIPMENT SHALL BE LATERALLY SUPPORTED IN ALL DIRECTIONS TO RESIST A MINIMUM AIRGAP AS REQUIRED BY LOCAL CODES.
22. BEFORE FABRICATION OR INSTALLATION, THIS CONTRACTOR SHALL VERIFY EXACT LOCATIONS OF ALL MECHANICAL EQUIPMENT AND EQUIPMENT PROVIDED UNDER ANOTHER SECTION OF SPECIFICATIONS. EXACT ROUGH–IN LOCATIONS AND REQUIREMENTS SHALL BE COORDINATED IN FIELD.
23. NO PIPING SHALL BE DIRECTLY EMBEDDED IN CONCRETE OR MASONRY WALLS OR FOOTING.
24. THE PLUMBING CONTRACTOR SHALL COORDINATE ALL REQUIREMENTS FOR ALL POINTS OF CONNECTION WITH THE GENERAL CONTRACTOR AND OTHER TRADES PRIOR TO BID.
25. ALL WASTE AND VENT PIPING SHALL SLOPE AT 2%. IF LESS THAN 2%, APPROVAL MUST BE OBTAINED FROM BUILDING OFFICIAL OR AUTHORITY HAVING JURISDICTION PRIOR TO INSTALLATION AND REFER TO NOTE 5.
26. ALL VALVES, TRAP PRIMERS, WATER HAMMER ARRESTORS OR OTHER EQUIPMENT SHOWN IN WALLS OR ABOVE NON–ACCESSIBLE CEILINGS SHALL BE INSTALLED BEHIND AN ACCESS PANEL.
27. ALL HORIZONTAL PIPING LINES EXTENDED AND CONNECTED TO EQUIPMENT SHALL BE RUN AT THE HIGHEST POSSIBLE ELEVATIONS AND NOT LESS THAN 6" ABOVE THE FLOOR TO PROVIDE CLEARANCE FOR CLEANING. AT WALL OR COLUMN LOCATIONS, PIPING ROUGH–IN SHALL BE STUBBED IN WALLS WHENEVER POSSIBLE.
28. THESE DRAWINGS SHALL BE READ IN CONJUNCTION WITH AND BE CONSIDERED TO BE A PART OF SEPARATE COMPLETE PLUMBING SPECIFICATION.
29. THE CONTRACTOR SHALL BE RESPONSIBLE FOR PATCHING AND REPAIRING ALL AREAS INCLUDING ADJACENT AREAS WHICH ARE EXCAVATED AND/OR DAMAGED BY HIS OPERATIONS. IN ADDITION, THE CONTRACTOR SHALL RESTORE TO THEIR ORIGINAL CONDITION ALL AREAS DAMAGED BY HIS OPERATIONS.
30. ALL CONNECTIONS TO EXISTING SERVICES SHALL BE MADE SUCH THAT INTERRUPTION TIME WILL BE AS SHORT AS POSSIBLE. THE CONTRACTOR SHALL GIVE THE OWNER'S REPRESENTATIVE SUFFICIENT NOTICE OF SUCH INTERRUPTION AND THE ACTUAL SHUT–DOWN TIME SHALL BE AT A TIME DESIGNATED BY THE OWNER'S REPRESENTATIVE. FACILITIES DEPARTMENT OUTAGE REQUEST FORM SHALL BE SUBMITTED.
31. ALL CUTTING OF EXISTING PAVING, WALKS AND/OR FLOORS SHALL BE BY MACHINE SAW CUTTING. HOLES FOR PIPES IN CONCRETE WALLS OR FLOORS SHALL BE DONE USING CORE DRILLING EQUIPMENT.
32. VERIFY EXACT LOCATIONS, DEPTH AND SIZE OF ALL PIPING TO WHICH CONNECTIONS ARE REQUIRED. FINAL CONNECTIONS TO EXISTING UTILITIES SHALL BE BY THIS CONTRACTOR.
33. ALL NEW OR REPAIRED DOMESTIC HOT AND COLD WATER SYSTEM SHALL BE DISINFECTED BY WATER–CHLORINIZATION PRIOR TO USE. THE METHOD SHALL BE PRESCRIBED BY THE L.A. COUNTY HEALTH AUTHORITY AND NASA SAFETY OFFICE. BACTERIOLOGICAL TESTING SHALL BE PERFORMED BY INDEPENDENT THIRD PARTY TESTING LABORATORY.

PLUMBING LEGEND & ABBREVIATION

SYMBOL	ABBREV	DESCRIPTION
	S OR W	SOIL OR WASTE (ABOVE GRADE)
	S OR W	SOIL OR WASTE (BELOW GRADE)
	V	VENT
	CW	COLD WATER
	HW	HOT WATER
	HWR	HOT WATER RETURN
G	G	GAS
CD	CD	CONDENSATE DRAIN
DR	DR	SECONDARY CONDENSATE DRAIN
SD	SD	STORM DRAIN
OD	OD	OVERFLOW DRAIN
F	F	FIRE PROTECTION LINE
AS	AS	AUTOMATIC SPRINKLER SYSTEM
	UP	PIPE UP/RISER
	DN	PIPE TEE DOWN
	DN	PIPE DOWN
	FCO	FLOOR CLEANOUT
	COTG	CLEANOUT TO GRADE
	WCO	WALL CLEANOUT
	SOV	SHUT–OFF VALVE
	CV	CHECK VALVE
	U	UNION
	GSOV	GAS COCK SHUT–OFF VALVE
	GSOV	GAS SHUT–OFF VALVE
	EXIST	EXISTING EQUIPMENT/PIPING
	POC	POINT OF CONNECTION
	POD	POINT OF DISCONNECTION
(#)	FU	FIXTURE UNIT
	ABV	ABOVE
	ADA	AMERICAN DISABILITIES ACT
	AFF	ABOVE FINISH FLOOR
	AP	ACCESS PANEL
	BEL	BELOW
	CLG	CEILING
	CONN	CONNECTION
	CONT	CONTINUATION
	DN	DOWN
	FLR	FLOOR
	FU	FIXTURE UNITS
	GPM	GALLONS PER MINUTE
	ICW	INDUSTRIAL COLD WATER
	IE	INVERT ELEVATION
	INT	INTEGRAL
	PSI	POUNDS PER SQUARE INCH
	S.S.	STAINLESS STEEL
	T/PRV	TEMPERATURE & PRESSURE RELIEF VALVE
	TYP	TYPICAL
	W/	WITH
	UTR	UP THRU ROOF
	VTR	VENT THRU ROOF

PLUMBING FIXTURE SCHEDULE

MARK	FIXTURE	ROUGH–IN–SIZE S/W	V	CW	HW	DESCRIPTION/REMARKS
		2"	1–1/2"	1/2"	1/2"	"ARKAY" WSP–30606, FIBERGLAS SINK WITH KDS–200 DS SINK FAUCET DECK MOUNTED. PROVIDE WITH PVC THREADED P–TRAP, STOPS AND SUPPLIES.
HB 1	HOSE BOX	2"	1–1/2"	1/2"	1/2"	IPS W4700HACP, WALL MOUNTED, RECESSED, 10–13/16"X8–13/16"X3–5/8"DEPTH, SUPPLY AND 2" PVC/ABS WASTE HOSE BOX, WATER HAMMER.
AC 1	AIR COMPRESSOR	–	–	–	–	CHAMPION MODEL 1215VTS35, HORIZONTAL TANK MOUNT ELECTRIC DRYER OIL–LESS, AIR COMPRESSOR, 5HP, 480V, 3PH. DIM: 69"x37–1/2"x67". OPER. WT. 1600 LBS. PROVIDE WITH AUTOMATIC DRAIN.
RD 1	REFRIGERATOR AIR DRYER	–	–	–	–	CHAMPION REFRIGERATED AIR DRYER MODEL 18CND 22 CFM@ 50°F. 1/5 HP, 120V./1 PH/60HZ. OPER. WT. 60 LBS. PROVIDE WITH AUTOMATIC DRAIN.
F 1	AIR FILTER	–	–	–	–	"ZEKS" AIR FILTER "ACCRALESSOR" MODEL 18LT.
IWH 1	INSTA–HOT WATER HEATER	–	–	1/2"	1/2"	"STIEBEL ELTRON" INSTANTANEOUS WATER HEATER MODEL #DHC 8–2, 5.4 KW, 208V/3 PH
CP 1	CONDENSATE PUMP	3/4"	1–1/4"	–	–	ITT – HOFFMAN CONDENSATE UNITS MODEL #CC–SINGLE, 14 GAL. CAPACITY, 2" INLET WITH 3/4 HP AT 30 FT HEAD, 120V/1PH
SP 1	SUMP PUMP	1–1/2"	1–1/2"	–	–	STARITE DP2, 1/3 HP, 115V/1ø/60HZ CAST IRON, POLYETHYLENE TANK, OIL–COOLED MOTOR, 48GPM TO A 5FT LIFT,
EES 1	EMERGENCY EYE WASH SHOWER	2"	1–1/2"	1–1/4"	–	HAWS MODEL NO. 8309 WC BARRIER FREE COMBINATION SHOWER EYE/FACE WASH FEATURE. ABS PLASTIC SHOWER HEAD AND A S.S. RECEPTOR WITH TWIN ABS PLASTIC FEATHER FLOW EYES/FACE WASH HEAD. PULL/PUSH PLUG ACTIVATION.

PLUMBING MATERIAL SCHEDULE

A. WATER PIPE – TYPE 'L' COPPER WITH WROUGHT COPPER FITTINGS AND 95/5 LEAD FREE SOLDER @ 3 PSI/100 FT WITH MAX VELOCITY OF 8 FT/S FOR COLD WATER AND 5 FT/S FOR HOT WATER.

B. ALL HOT WATER AND HOT WATER RETURN PIPING SHALL BE INSULATED WITH INSULATION HAVING A K–FACTOR OF 0.25.

C. SEWER AND VENT PIPE – HUBLESS CAST IRON SOIL PIPE AND FITTINGS WITH "HUSKY" FOUR BANDED STAINLESS STEEL COUPLINGS, ABOVE AND BELOW FLOOR PIPING TO SLOPE AT 2%.

D. ANCHOR WATER SUPPLY PIPING IN WALL WITH CAST BRASS OR WROUGHT COPPER 90° DROP ELL FITTING AS MANUFACTURED BY NIBCO OR APPROVED EQUAL.

E. SUPPORT PIPING WITH CLEVIS OR SPLIT RING TYPE HANGERS. "PLUMBERS TAPE" OR WIRE IS NOT PERMITTED.

F. COMPRESSED AIR – TYPE "L" COPPER WITH SOLDER JOINTS.

PLUMBING DRAWING INDEX

P1	INDEX, NOTES, SCHEDULES, LEGEND, ABBREVIATION AND SYMBOLS
P2	PLUMBING FLOOR PLAN

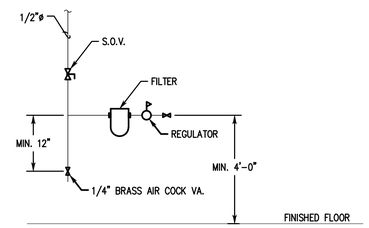

COMPRESSED AIR DROP DETAIL

SCALE: NONE | 4 | P2 P1

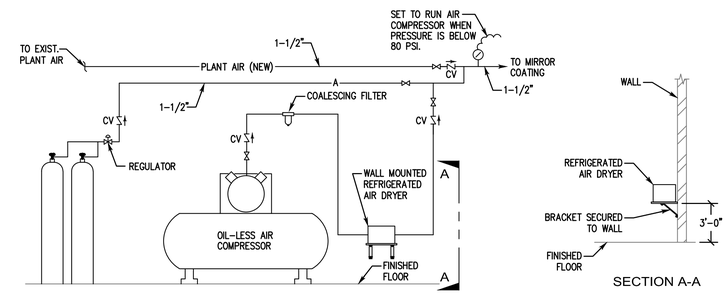

AIR COMPRESSOR CONNECTION DETAIL

SCALE: NONE | 2 | P2 P1

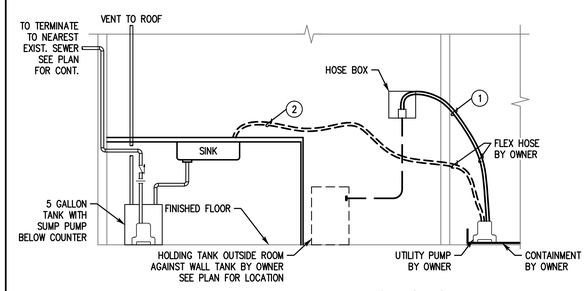

REFERENCE NOTES:

1. IF WATER IS HAZARDOUS IT WILL TERMINATE TO HOSE BOX.
2. IF WATER IS SAFE IT WILL TERMINATE TO SINK.

HOLDING TANK PIPING DETAIL

SCALE: NONE | 3 | P2 P1

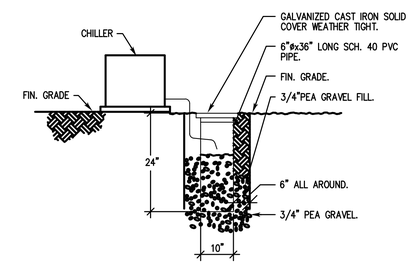

CONDENSATE DISCHARGE TO DRYWELL DETAIL

SCALE: NONE | 1 | P2 P1

DATE	SYM	REVISION	BY	A'PD
05-03-11	△	AS-BUILT		

DONN C. GILMORE & ASSOCIATES, INC.
Consulting Mechanical and Electrical Engineers
DCGA
4051 E. La Palma Ave., Ste. A
Anaheim, CA 92807
Ph.: 714.630.4291
Fax: 714.630.4805

NATIONAL AERONAUTICS AND SPACE ADMINISTRATION
DRYDEN FLIGHT RESEARCH CENTER
EDWARDS, CA

DRAWING TITLE
PLUMBING NOTES, LEGEND AND ABBREVIATIONS

PROJECT TITLE
CONSTRUCT MIRROR COATING FACILITY
DAOF BUILDING 703
100% FINAL DESIGN

APPROVALS	DATE
Chief, Facilities Engineering & Asset Mgmt. Office	
Project Manager	
Security Office	
Project Requester	
Safety Office	
Telecom	

DRAWN BY	ANH, JZ, LL	DATE STRTD	4–18–08
W.O. #		DATE PRNTD	4–14–09
PLOT SCALE / CAD FILE NAME	TRADE SH. No. P1	EDM–1685	SHEET No. 28 of 40

AS-BUILT

DWG: Z:\Aerospace and Defense\NASA\mirror coating facility\as-built complete\Deliverable\27-EDM-1685-As-Built-P1.dwg USER: Nelson
DATE: Jun 21, 2011 10:54am XREFS: IMAGES:

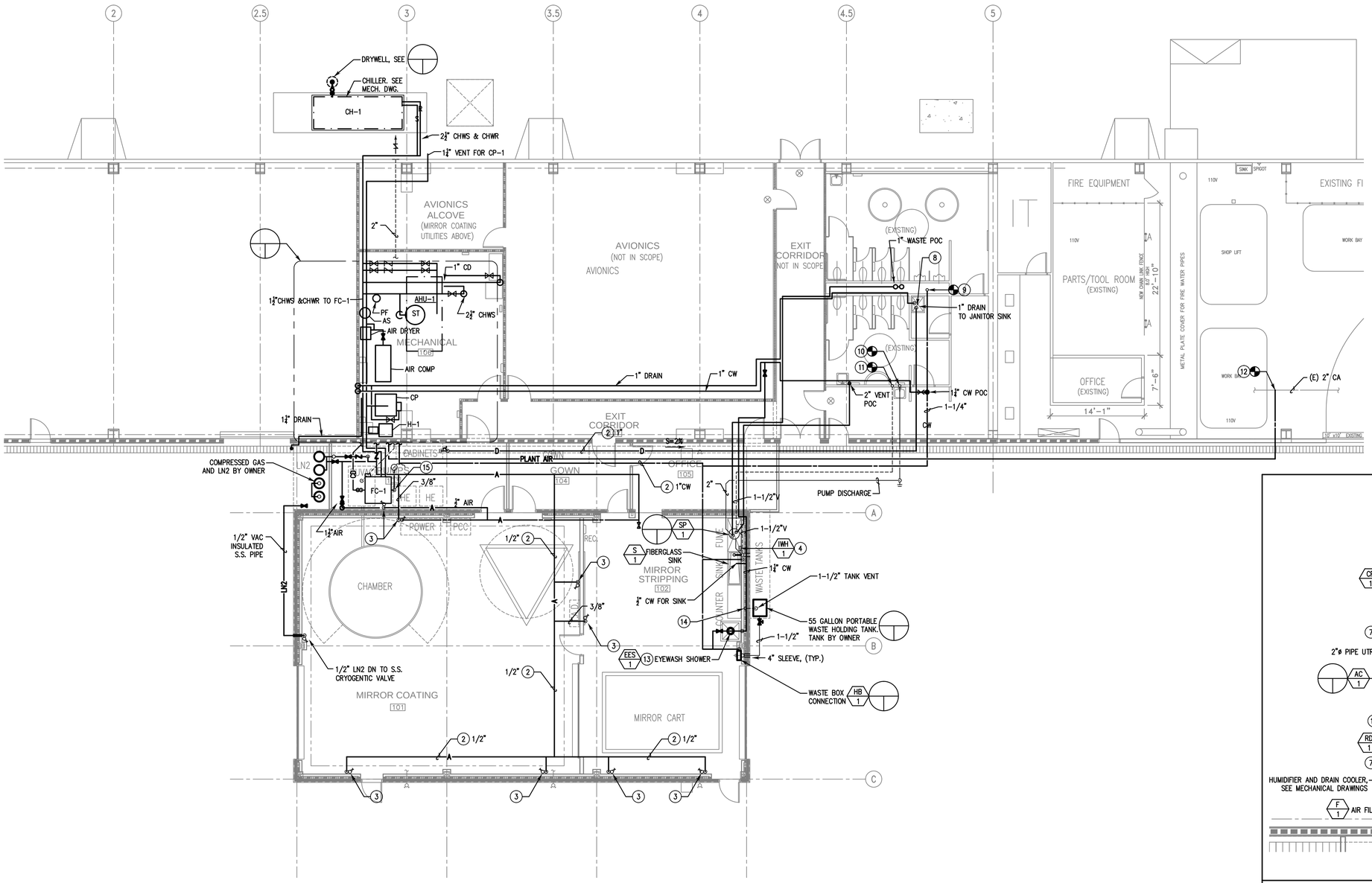

CONSTRUCTION NOTES:

1. PIPING BELOW FLOOR.
2. PIPING ABOVE CEILING.
3. NORGEN FILTER/REGULATOR MODEL #B11-397-A3LA, 3/8" WITH AUTOMATIC DRAIN AND GAUGE.
4. TEE 1/2"CW TO INSTA-HOT WATER HEATER BELOW SINK.
5. 1/2"CW, TEE 1/2"CW TO INSTA-HOT WATER HEATER.
6. 2" DRAIN FROM AIR COMPRESSOR, DRYER AND HUMIDIFIER DRAIN COOLER.
7. 2" DRAIN FROM DRAIN COOLER TO TERMINATE TO CP-1.
8. 1" DRAIN TO SPILL TO SERVICE SINK.
9. P.O.C.- CONNECT 1-1/4"CW TO (E) CW MAIN IN PLUMBING CHASE. FIELD VERIFY EXACT LOCATION.
10. P.O.C.- CONNECT 2" WASTE TO (E) WASTE FIELD VERIFY EXACT LOCATION.
11. P.O.C.- CONNECT 1-1/2"V TO (E) VENT. FIELD VERIFY EXACT LOCATION.
12. P.O.C.- CONNECT PLANT AIR TO (E) 2" CA. FIELD VERIFY EXACT LOCATION.
13. 1-1/4"CW TO EMERGENCY EYEWASH/SHOWER.
14. 1-1/2" TANK VENT UTR OF PEB.
15. 3/4" FAN COIL EMERGENCY DRAIN TO TERMINATE ABOVE FLOOR
16. 3/4"CD ABOVE CEILING TERMINATE DN TO CONDENSATE RECEIVER.
17. 1" BACKFLOW PREVENTER WATTS 909QT.
18. 1" ICW TO DRAIN COOLER.

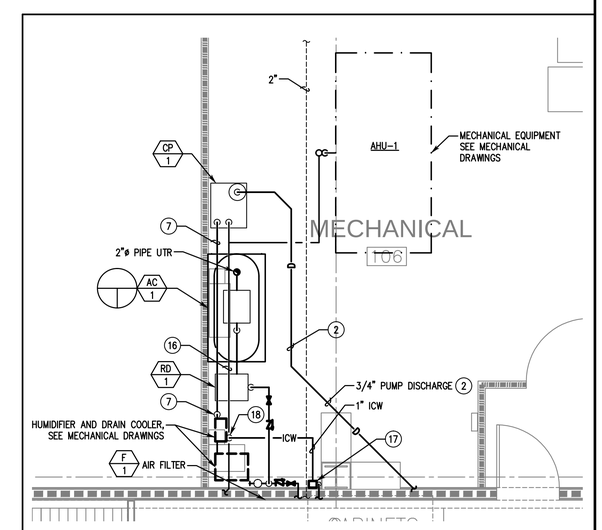

ENLARGED VIEW — SCALE: 1/4" = 1'-0" (2, P2, P2)

NORTH

PLUMBING FLOOR PLAN — SCALE: 1/8" = 1'-0" (1, P2, P2)

DONN C. GILMORE & ASSOCIATES, INC.
Consulting Mechanical and Electrical Engineers
DCGA
4051 E. La Palma Ave., Ste. A
Anaheim, CA 92807
Ph.: 714.630.4291
Fax: 714.630.4805

DATE	SYM	REVISION	BY	A'PD
10-07-11	△	AS-BUILT		

NATIONAL AERONAUTICS AND SPACE ADMINISTRATION
DRYDEN FLIGHT RESEARCH CENTER
EDWARDS, CA

DRAWING TITLE
PLUMBING FLOOR PLAN

PROJECT TITLE
CONSTRUCT MIRROR COATING FACILITY
DAOF BUILDING 703
100% FINAL DESIGN

APPROVALS	DATE
Chief, Facilities Engineering & Asset Mgmt. Office	
Project Manager	
Security Office	
Project Requestor	
Safety Office	
Telecom	

DRAWN BY	ANH, JZ, LL	DATE STRTD	4-18-08
W.O. #		DATE PRNTD	4-14-09
PLOT SCALE / CAD FILE NAME	TRADE SH. No. P2	EDM-1685	
		SHEET No. 29 of 40	

AS-BUILT 10-07-11

DWG: Z:\Aerospace and Defense\NASA\mirror coating facility\as-built complete\Deliverable\028-EDM-1685-As-Built-P2.dwg USER: Nelson
DATE: Jun 21, 2011 11:24am XREFS: 8039 M2 IMAGES:

ANNOTATIONS

1 — DETAIL REFERENCE NUMBER
E2 E6 — SHEET DETAIL IS SHOWN ON
SHEET ON WHICH DETAIL IS TAKEN

3 / 93 2 — LIGHTING FIXTURE CALL OUT, "3" INDICATES FIXTURE TYPE (REFER TO LIGHTING FIXTURE SCHEDULE), NUMBER ADJACENT INDICATES QUANTITIES (NUMBER IS SHOWN FOR BRANCH CIRCUIT PURPOSES ONLY, NOT FOR MATERIAL TAKE-OFF). NUMBER "93" INDICATES FIXTURE WATTS

2 — PLAN NOTE REFERENCE, REFER TO NOTES ON SHEET, OR AS DIRECTED.

4 — REVISION REFERENCE.

ABREVIATIONS

A/C	ASPHALT CONCRETE
ADA	AMERICAN WITH DISABILITIES ACT
A.F.F.	ABOVE FINISH FLOOR
A.F.G.	ABOVE FINISH GRADE
AWG	AMERICAN WIRE GAUGE
AMP, A	AMPERE
A.I.C.	AMPERES INTERRUPTING CAPACITY (SYMMETRICAL)
AF/AT	AMP FRAME, AMP TRIP
AS/AF	AMP SWITCH, AMP FUSE
CIRC.,CKT.	CIRCUIT
CB	CIRCUIT BREAKER
C	CONDUIT
CM	CENTIMETER
C.O.	CONDUIT ONLY, COMPLETE WITH PULLSTRING
CONN	CONNECTED
CPT	CONTROL POWER TRANSFORMER
CLCB	CURRENT LIMITING CIRCUIT BREAKER
CLF	CURRENT LIMITING FUSE
CT	CURRENT TRANSFORMER
DIA	DIAMETER
E.C.	ELECTRICAL CONTRACTOR
EMS	ENERGY MANAGEMENT CONTROL SYSTEM
EMT	ELECTRICAL METALLIC TUBING
ENT	ELECTRICAL NON-METALLIC TUBING
EWC	ELECTRIC WATER COOLER
E-O-L	END-OF-LINE CIRCUIT TERMINATOR.
EF	EXHAUST FAN
E/G	EQUIPMENT GROUND (GREEN)
E	EXISTING EQUIPMENT
EP	EXPLOSION PROOF
FA	FIRE ALARM
FLA	FULL LOAD AMPS
GFCI	GROUND FAULT CIRCUIT INTERRUPTER.
GRD	GROUND
HOA	HAND-OFF-AUTO
HVAC	HEATING, VENTILATING AND AIR CONDITIONING
H.,W.,D.	HEIGHT, WIDTH, DEPTH
HID	HIGH INTENSITY DISCHARGE
HP	HORSEPOWER
HPS	HIGH PRESSURE SODIUM
I/G	ISOLATED GROUND
JBOX	JUNCTION BOX
K	DEGREE KELVIN
KVA	KILOVOLT AMPERES
KW	KILOWATT
LCL	LONG CONTINUOUS LOAD
L.F.	LINEAR FEET
LTG, LTS	LIGHTING
LPS	LOW PRESSURE SODIUM
MAX.	MAXIMUM
MCB	MAIN CIRCUIT BREAKER
MIN.	MINIMUM
MLO	MAIN LUGS ONLY
MM	MILLIMETER
MV	MERCURY VAPOR
MH	METAL HALIDE
MCC	MOTOR CONTROL CENTER
MCM	THOUSAND CIRCULAR MILS
MCP	MOTOR CIRCUIT PROTECTOR
MFR.	MANUFACTURER
MTD	MOUNTED
MW	MICROWAVE
NEC	NATIONAL ELECTRICAL CODE
NC	NORMALLY CLOSED
NO	NORMALLY OPENED
NF	NON-FUSED
NIC	NOT IN CONTRACT
NL	NIGHT LIGHT
NO. or #	NUMBER
OFCI	OWNER FURNISHED, CONTRACTOR INSTALLED.
P	POLE
PC	PHOTOCELL
PRIMARY	OVER 600 VOLTS
PH. or Ø	PHASE
PROVIDE	FURNISH, INSTALL AND CONNECT.
PT	POTENTIAL TRANSFORMER
PA	PUBLIC ADDRESS
REC, RECEPT	RECEPTACLE
REF	REFRIGERATOR
RGS	RIGID GALVANIZED STEEL
SECONDARY	600 VOLTS AND LESS
SQ.	SQUARE
TC	TIMECLOCK
TEL/DATA	TELEPHONE AND DATA
TV	TELEVISION
TYP	TYPICAL
U.O.N.	UNLESS OTHERWISE NOTED
V	VOLTS
VA	VOLT AMPERES
WP	WEATHERPROOF
W	WIRE

SIGNAL SYSTEM SYMBOLS

S — SMOKE DETECTOR, CEILING MOUNTED.

DD — DUCT DETECTOR, MECHANICAL SYSTEM CONTROL.

SF — COMBINATION SMOKE/FIRE DAMPER PROVIDE FACP INITIATION CIRCUIT AND 120V POWER SYSTEM CONNECTION.

GENERAL NOTES:

1. CONDUIT SIZES CALLED OUT ON DRAWINGS ARE NOT NECESSARILY BASED ON THE MINIMUM SIZE ALLOWED BY THE NATIONAL ELECTRICAL CODE AND MAY BE PURPOSELY OVERSIZED FOR EASE OF CONDUCTOR PULLING OR TO AVOID EXCESS CONDUIT HEATING. IN NO CASE SHALL CONDUIT SIZE BE SMALLER THAN IS REQUIRED BY THE NATIONAL ELECTRICAL CODE.

2. THE CONTRACTOR SHALL PROVIDE AND INSTALL ALL JUNCTION AND PULL BOXES REQUIRED FOR THE INSTALLATION OF ELECTRICAL DEVICES AND EQUIPMENT, WHETHER OR NOT SPECIFICALLY INDICATED ON THE PLANS. SIZE OF THESE BOXES SHALL BE PER THE NATIONAL ELECTRICAL CODE.

3. THE CONTRACTOR SHALL FURNISH ALL EQUIPMENT FOR TEMPORARY CONSTRUCTION POWER AS REQUIRED.

4. ALL PENETRATIONS THROUGH FIRE BARRIERS SHALL BE FIRE STOPPED TO MAINTAIN THE INTEGRITY OF THE FIRE BARRIER. FIRE STOPPING MATERIAL SHALL BE U.L. LISTED.

5. THE CONTRACTOR SHALL OBTAIN APPROVAL FROM THE CONTRACTING OFFICER BEFORE DRILLING ANY PENETRATION THROUGH STRUCTURAL MEMBERS OR FIRE RATED WALLS AND SLABS.

6. SHOULD PROJECT CONDITIONS REQUIRE REARRANGEMENT OF WORK, THE CONTRACTOR SHALL MARK SUCH CHANGES ON THE AS-BUILT DRAWINGS. IF THESE CHANGES REQUIRE ALTERNATE METHODS TO THOSE SPECIFIED IN THE CONTRACT DOCUMENTS, THE CONTRACTOR SHALL SUBMIT DRAWINGS SHOWING THE PROPOSED ALTERNATE METHODS TO THE CONTRACTING OFFICER. THE CONTRACTOR SHALL NOT PROCEED UNTIL APPROVAL IS OBTAINED. REARRANGEMENT OF WORK FOR THE PURPOSE OF COORDINATION SHALL NOT BE CONSIDERED AN ITEM FOR EXTRA COST.

7. PROVIDE TESTING BY OPERATING THE INSTALLATION AND RUNNING TESTS TO DEMONSTRATE ITS OPERATIONS AND COMPLIANCE WITH THE EQUIPMENT SPECIFICATIONS TEST ALL WIRING AND EQUIPMENT TO INSURE PROPER OPERATION ACCORDING TO FUNCTIONS SPECIFIED HEREIN AND ON THE DRAWINGS.

8. WARRANTY:
ALL WORK IN THIS SECTION SHALL BE UNDER WARRANTY FOR A PERIOD OF ONE YEAR FROM THE DATE OF ACCEPTANCE OF THE WORK AS A WHOLE BY THE CONTRACTING OFFICER. SHOULD ANY EQUIPMENT OR MATERIAL FAIL WITHIN THIS PERIOD, THE CONTRACTOR SHALL REPLACE OR REPAIR THAT ITEM AT NO COST FOR MATERIAL AND/OR SERVICES IF SUCH IS DUE TO FAULTY WORKMANSHIP OR QUALITY OF MATERIAL FURNISHED. THE CONTRACTOR SHALL BE RESPONSIBLE FOR ALL DAMAGE TO ANY PART OF THE PREMISES CAUSED BY FAILURE IN THE EQUIPMENT FURNISHED AS PART OF THE CONTRACT DRAWINGS FOR A PERIOD OF ONE YEAR AFTER THE FINAL ACCEPTANCE OF THE WORK AS A WHOLE.

9. ALL MECHANICAL CONTROL SYSTEMS EQUIPMENT SHALL BE PROVIDED, INSTALLED AND WIRED BY THE MECHANICAL CONTRACTOR PER THE CONTRACT DOCUMENTS. ELECTRICAL CONTRACTOR SHALL PROVIDE CONDUITS ONLY FOR CONTROL WIRING. ELECTRICAL POWER FOR THE MECHANICAL CONTROL SYSTEM EQUIPMENT SHALL BE PROVIDED BY THE ELECTRICAL CONTRACTOR. THIS INCLUDES THE POWER WIRING, AND CONNECTION TO THE MECHANICAL CONTROL SYSTEMS EQUIPMENT.

10. ALL EQUIPMENT SHALL BE DESIGNED AND INSTALLED FOR USE IN A SEISMIC ZONE 4 AREA. ALL SEISMIC ANCHOR AND BRACING DESIGN SHALL BE STAMPED AND SIGNED BY A PROFESSIONAL STRUCTURAL ENGINEER LICENSED IN THE STATE OF CALIFORNIA, THROUGH THE A/E PROJECT TEAM.

11. PATCH AND PAINT ALL EXPOSED ELECTRICAL MATERIAL, INCLUDING CONDUIT, SURFACE METAL RACEWAYS, JUNCTION BOXES, PANELS, AND DEVICES TO MATCH THE ADJACENT SURFACES IN TEXTURE AND COLOR.

12. REPAIR ANY DAMAGE TO EXISTING CONSTRUCTION RESULTING FROM THE INSTALLATION OF ELECTRICAL ITEMS. THE AREAS REPAIRED SHALL MATCH THE ADJACENT SURFACES IN TEXTURE AND COLOR.

13. ALL ELECTRICAL SPLICES SHALL BE WATERPROOF.

14. ALL MOUNTING HARDWARE, CHANNELS AND FASTENING DEVICES IN EXTERIOR LOCATIONS SHALL BE 316 STAINLESS STEEL UNLESS NOTED.

15. PROVIDE A COMPLETE AND OPERATING ELECTRICAL SYSTEM. PROVIDE SHALL MEAN "FURNISH AND INSTALL". WORK INCLUDES INSTALLATION OF ALL ELECTRICAL EQUIPMENT AND SYSTEMS, INCLUDING ANY FURNISHED BY OWNER OR OTHER TRADES, COMPLETE AND OPERATIONAL TO THE SATISFACTION OF THE CONTRACTING OFFICER, AS LIMITED BY THE SCOPE OF WORK AND INTENT OF THE CONTRACT DOCUMENTS.

16. THE CONTRACTOR SHALL COMPLY WITH THE CONSTRUCTION PRACTICES AND REQUIREMENTS OF THE LATEST EDITION OF THE NATIONAL ELECTRIC CODE (NFPA 70), NATIONAL ELECTRICAL SAFETY CODE, AMERICAN ELECTRICIANS HANDBOOK BY CROFT EDISON ELECTRIC INSTITUTE, AMERICANS WITH DISABILITIES ACT, APPLICABLE INSTRUCTIONS OF MANUFACTURERS OF EQUIPMENT AND MATERIALS SUPPLIED FOR THE PROJECT, AND ALL ORDINANCES, RULES AND POLICIES OF THE STATE AND COUNTY IN WHICH THE WORK IS TO BE PERFORMED.

17. THE CONTRACTOR SHALL VISIT THE JOB SITE AND FAMILIARIZE HIMSELF WITH ALL EXISTING CONDITIONS AND THE EXTENT OF REMOVAL, RELOCATION, RECONNECTION AND/OR NEW WORK PRIOR TO BIDDING. BID SUBMISSION SHALL BE RESOLVED ALL DISCREPANCIES AND QUESTIONS AND NO EXTRA PAYMENT WILL BE AUTHORIZED FOR WORK MADE NECESSARY BY THE CONTRACTOR'S FAILURE TO DO SO.

18. ALL CIRCUITS SHALL INCLUDE AN INSULATED GREEN GROUNDING CONDUCTOR, SIZED PER THE NATIONAL ELECTRICAL CODE. THIS CONDUCTOR SHALL BE CARRIED IN ALL RACEWAYS INCLUDING THOSE INSTALLED FOR SWITCH LEGS AND SHALL BE ATTACHED TO THE DEVICE OR EQUIPMENT HOUSING USING A SUITABLE GROUNDING LUG.

19. AT COMPLETION OF CONSTRUCTION, CONTRACTOR SHALL PROVIDE A COPY OF AS-BUILT DRAWINGS IN AUTO-CAD 2009 TO THE CONTRACTING OFFICER.

20. ALL ELECTRICAL CONDUCTORS FOR DISTRIBUTION AT 480 VOLTS AND BELOW SHALL BE THHN, 90°C INSULATION EXCEPT WHERE SPECIFIED ON SINGLE LINE DIAGRAM TO INSTALL DOL TYPE RHH/RHW-2 90°C CONDUCTORS.

21. MINIMUM CONDUCTOR SIZE SHALL BE #12 AWG FOR BOTH POWER AND CONTROL CIRCUITS, IN MINIMUM 3/4" CONDUIT.

TELEPHONE/DATA SYMBOLS

COMBINATION TELEPHONE AND DATA OUTLET BOX, RECESSED WALL MOUNTED AT +18" A.F.F. TO BOTTOM PROVIDE (2) 3/4"C.O. (WITH PULL ROPE) UP TO CABLE TRAY ABOVE ACCESSIBLE CEILING SPACE, WITH BUSHINGS ON ENDS.

COMBINATION TELEPHONE AND DATA OUTLET BOX, FLOOR MOUNTED ON IN-FLOOR RACEWAY. PROVIDE (2) 3/4 "C.O. (WITH PULL ROPE) FROM RACEWAY UNDER WALL UP TO CABLE TRAY ABOVE ACCESSIBLE CEILING SPACE, WITH BUSHINGS ON ENDS.

LIGHTING SYMBOLS

RESESSED MOUNTED LENSED FIXTURE IN T-BAR OR GYP-BOARD CEILING. REFER TO LIGHTING FIXTURE SCHEDULE.

RECESSED MOUNTED LENSED EMERGENCY FIXTURE IN T-BAR OR GYP-BOARD CEILING. REFER TO LIGHTING FIXTURE SCHEDULE. EMERGENCY BATTERY BALLAST (90 MINUTE).

SURFACE MOUNTED LENSED FIXTURE AND JUNCTION BOX. REFER TO LIGHTING FIXTURE SCHEDULE, OR AS NOTED ON PLANS.

SURFACE MOUNTED LENSED EMERGENCY FIXTURE AND JUNCTION BOX. REFER TO LIGHTING FIXTURE SCHEDULE, OR AS NOTED ON PLANS. EMERGENCY BATTERY BALLAST (90 MINUTE).

WALL MOUNTED LIGHTING FIXTURE AND OUTLET BOX. REFER TO LIGHTING FIXTURE SCHEDULE AND PLANS FOR MOUNTING HEIGHT.

STRIP LIGHTING FIXTURE AND JUNCTION BOX. REFER TO LIGHTING FIXTURE SCHEDULE, OR AS NOTED ON PLANS.

STRIP LIGHTING EMERGENCY FIXTURE AND OUTLET BOX. REFER TO LIGHTING FIXTURE SCHEDULE, OR AS NOTED ON PLANS.

OCCUPANCY SENSOR, CEILING MOUNTED, MULTI-TECHNOLOGY COMBINED INFRARED AND ULTRASONIC.

BRANCH CIRCUIT SYMBOLS

A-1,3,5 — HOME RUN TO PANEL. LETTER DESIGNATES PANEL, NUMBERS INDICATE CIRCUITS. UNLESS OTHERWISE NOTED.

CONCEALED BRANCH CIRCUIT UNLESS OTHERWISE NOTED.

CONDUIT STUB OUT, CAP, MARK AND RECORD.

CONDUIT CONTINUATION.

INDICATES FLEXIBLE CONNECTION TO EQUIPMENT. NUMBER OF CONDUCTORS AS REQUIRED.

POWER SYMBOLS

DUPLEX RECEPTACLE, WALL RECESSED MOUNTED AT +18" A.F.F. TO BOTTOM OR AS NOTED.

DOUBLE DUPLEX GFCI RECEPTACLE, WALL RECESSED MOUNTED AT +18" A.F.F. TO BOTTOM OR AS NOTED.

DOUBLE DUPLEX RECEPTACLE, WALL RECESSED MOUNTED AT +18" A.F.F. TO BOTTOM OR AS NOTED.

DUPLEX, GFCI RECEPTACLE, WALL RECESSED MOUNTED AT +18" A.F.F. TO BOTTOM OR AS NOTED.

DUPLEX, GFCI RECEPTACLE, WALL RECESSED MOUNTED AT +6" COUNTER OR SPLASH.

SINGLE RECEPTACLE, WALL RECESSED MOUNTED AT +18" A.F.F. TO BOTTOM OR AS NOTED.

JUNCTION BOX, WALL RECESSED MOUNTED AT +18" A.F.F. TO BOTTOM OR AS NOTED. 4S/DP MINIMUM OR AS REQUIRED BY N.E.C..

JUNCTION BOX, MOUNTED IN ACCESSIBLE CEILING FOR APPLICATION DENOTED ON PLAN. 4S/DP MINIMUM OR AS REQUIRED BY N.E.C..

EXHAUST FAN, OR MOTOR LOAD. REFER TO MECHANICAL, PLUMBING OR KITCHEN DRAWINGS FOR SPECIFIC LOAD REQUIREMENTS OR AS NOTED.

FLUSH MOUNTED ELECTRICAL PANELBOARD OR LOAD CENTER. REFER TO PANEL SCHEDULE.

SURFACE MOUNTED ELECTRICAL PANELBOARD OR LOAD CENTER. REFER TO PANEL SCHEDULE.

T — TRANSFORMER, REFER TO SINGLE LINE DIAGRAM.

F — FUSED DISCONNECT SWITCH, HP RATED WITH FUSES PER EQUIPMENT MANUFACTURER AND WEATHERPROOF AS REQUIRED. PROVIDE FINAL CONNECTION TO UNIT EQUIPMENT. MOUNTED AT +48" A.F.F.

NON-FUSED DISCONNECT SWITCH, HP RATED AND WEATHERPROOF AS REQUIRED. PROVIDE FINAL CONNECTION TO UNIT EQUIPMENT. MOUNTED AT +48" A.F.F.

GROUND CONNECTION, SIZE AS INDICATED OR AS REQUIRED.

$ab — SINGLE POLE SWITCHES, WALL MOUNTED AT +48" A.F.F. TO CENTERLINE (MAX). SUBSCRIPTS AT SYMBOL INDICATE THE FOLLOWING:

2 – DOUBLE POLE	P – PILOT LIGHT
3 – THREE WAY	R – REMOTE CONTROL
4 – FOUR WAY	M – MOTOR STARTING
K – KEY OPERATED	RL – ROTARY LOCK KEY TYPE
LV – LOW VOLTAGE	PB – PUSHBUTTON

a, b, c, ETC. – DESIGNATES QUANTITY OF SWITCHES AT EACH LOCATION.
NOTE: ALL WALL SWITCHES CONTROLLING EMERGENCY CIRCUITS SHALL BE ENGRAVED WITH "EMERGENCY"

P P — PULL BOX, SIZED AS INDICATED.
LETTER "P" OR "C" INDICATES POWER OR COMMUNICATIONS CIRCUITS.

M P — MANHOLE, SIZED AS INDICATED.
LETTER "P" OR "C" INDICATES POWER OR COMMNICATIONS CIRCUITS.

GROUND WELL

$m — FRACTIONAL HP MOTOR STARTER, SINGLE-POLE, HOA, WITH TOGGLE SWITCH,

COMBINATION MOTOR STARTER, HOA, RATING AS INDICATED ON PLANS.

CIRCUIT BREAKER.

TRANSFORMER, RATING AS INDICATED.

DATE	SYM	REVISION	BY	A'PD
10-01-11	4	AS-BUILT		

DONN C. GILMORE & ASSOCIATES, INC.
Consulting Mechanical and Electrical Engineers
DCGA
4051 E. La Palma Ave., Ste. A
Anaheim, CA 92807
Ph.: 714.630.4291
Fax: 714.630.4805

NATIONAL AERONAUTICS AND SPACE ADMINISTRATION
DRYDEN FLIGHT RESEARCH CENTER
EDWARDS, CA

DRAWING TITLE
ELECTRICAL SYMBOLS LISTS, ABBREVIATIONS AND NOTES

PROJECT TITLE
CONSTRUCT MIRROR COATING FACILITY
DAOF BUILDING 703
100% FINAL DESIGN

APPROVALS	DATE
Chief, Facilities Engineering & Asset Mgmt. Office	
Project Manager	
Security Office	
Project Requestor	
Safety Office	
Telecom	

DRAWN BY	ANH, JZ, LL	DATE STRTD	4-18-08
W.O. #		DATE PRNTD	4-14-09
PLOT SCALE / CAD FILE NAME	TRADE SFX. No. E1	EDM-1685	
		SHEET No. 30 of 40	

AS-BUILT

DWG: Z:\Aerospace and Defense\NASA\mirror coating facility\as-built complete\Deliverable\29-EDM-1685-As-Built-E1.dwg USER: Nelson
DATE: Jun 21, 2011 11:27am XREFS: IMAGES