Attachment Designation	Reference Number	Title	Description
J.5		Mirror Coater Timelines and Submittals	Mirror Coater Timelines and Submittals
J.6.1	RFI-1	SOFIA Mirror Coating System Description and Components List Part 1	Detailed itemization of all of the MCF items
J.6.2	RFI-2	SOFIA Mirror Coating System Description and Components List Part 2	Photographs of MCF items
J.6.3	RFI-3	SOFIA Mirror Coating System Description and Components List Part 3	Photographs of MCF items
J.7.1	V095-1-005	Structural Design Criteria	Mirror Coater vendor structural design criteria
J.7.2	V095-1-009	Chamber Support Legs	Original Vendor mechanical design calculations for the Mirror Coater support legs.
J.7.3	V095-1-010	Head Support Frame	Original Vendor mechanical design calculations for the Mirror Coater Head Support Frame; the three legged stand used for Head storage.
J.7.4	V095-1-033	Head Support Brackets	Original Vendor mechanical design calculations for the Mirror Coater Head Support Brackets; these are the “lift brackets” used to hoist the Head away from the vessel.
J.7.5	V095-1-031	Platform Design	Original Vendor mechanical design calculations for the Mirror Coater Platform; the work platform attached to the vessel.
J.7.6	V095-2-013	Piping Design and Materials	Specification for Piping Design and Material for Primary Mirror Coating System SOFIA Project
J.8		Safety Data Sheet - FOMBLIN(R) Y LVAC	MSDS Fomblin
J.9.1		Activity Hazard Analysis Form	Activity Hazard Analysis Form
J.9.2		AHA Example	Example - AHA Data Logging System
J.9.3		MCF Safety Assessment Report	
J.9.4		PMA OSHA Report	
J.10		MCF As-Built Drawings	
J.11.1		Electric Console Drawings	
J.11.2		PWR Cabling	
J.12	SSMOC-MCF-PRO-2001C	Mirror Aluminizing Procedure	
J.13	SSMOC-MCF-PRO-2300C	Mirror Coating Chamber Integrated System Test	
J.14	AmesStdD_BDR24X36	Ames Standard Drawing Template	
J.15		Ames Research Center Map	
J.16		NASA ARC Confined Space Entry Permit	
J.17		Confined Space Evaluation Form	
J.18		Hot Work Permit - Sample	

SOW Para. Ref	Approximate Timeline	Event	Submittals Required	Submittals Due	Gov't approval req'd
N/A	Start-8 weeks	Proposal Evaluation	2-3 Key Personnel Resumes	With Proposal	
			Relocation Plan		
			Project Schedule		
			2-3 page Description of Prior Experience		
			Quality Assurance and Safety Plan		
	Within 10 days of Contract award	Contract Initiation Meeting	Project Schedule	Within 10 days of Contract award	Yes
			List of Contact Personnel	Within 10 days of Contract award	
			On-site Personnel List	Within 10 days of Contract award	
			Relocation Plan	Within 10 days of Contract award	Yes
			Quality Assurance and Safety Plan		Yes
			Welder Certifications	4 weeks after contract award	Yes
			Moving Equipment List		
	Within 5 weeks of contract award	Project Implementation Review	Installation Design Layout Drawings	4 weeks after contract award	Yes
			Electrical Drawings	4 weeks after contract award	Yes
			Activity Hazard Analysis	4 weeks after contract award	Yes
			Proposal for Fabrication	4 weeks after contract award	Yes
			Welding Procedure Specifications (WPSs)	4 weeks after contract award	
			Analysis of welded structures stability for transport	4 weeks after contract award	Yes
			Certifications of Rigging Equipment and Operators	4 weeks after contract award	
			Annual/Quadrenial Rigging Equipment Inspections	4 weeks after contract award	
			Signed Code of Safe Practices	4 weeks after contract award	
			Pre-Lift Safety Checklist	4 weeks after contract award	
			Moving Equipment List	4 weeks after contract award	
			Logistics and Site Requirements	4 weeks after contract award	
			Project Schedule (any revisions)	4 weeks after contract award	Yes
	After Project Implementation Review	Weekly Tag-up	None		
	Per Contractor Schedule	Critical Lift Safety Tag Up	[Approved and Signed] Critical Lift Plan		

		Pre-dismantling electrical inspection			
	Per Contractor Schedule	Packaging Inspection			
	Per Contractor Schedule	Post-shipment Inspections			Yes
		DAOF			
		ARC			
	Per Contractor Schedule	Pre-activation Systems Inspection	Welding Inspection Reports	At Pre-activation Inspection	
	Per Contractor Schedule	Test Readiness Review	Field Quality Control Reports	3 days prior to TRR	
			Inspection Reports	3 days prior to TRR	
			Performance Test Procedure	3 days prior to TRR	Yes
	By 2/16/2012	Performance Tests	As-Run Performance Test Report	2/16/2012	
N/A	Government/USRA	Recommissioning			
N/A	Government/USRA	ORR			

SOFIA Mirror Coating System Description and Components List

Mirror Coater Functional Description The Mirror Coater's primary function is to aluminize the SOFIA Primary Mirror to a coating thickness of approximately 200 nm. The Mirror Coater has a removable lid, and when removed the SOFIA Primary Mirror Assembly (PMA) is loaded, face down at mid-height in the vessel. Air evacuation for both the volumes above and below the PMA takes place, by sequentially rough pumping followed by Meissner Trap operation, followed by cryopump operation. In a typical mirror coating run, the roughing pumps are able to evacuate the chamber to a pressure of 15 mTorr within 2.5 hours. The Meissner Trap surfaces are next cooled to freeze out any present water, then the cryopumps are engaged to pump the chamber down to a pressure of less than 5 μTorr. The Mirror Coater also includes a Glow Discharge System for cleaning the surface of the mirror while at low pressure and prior to aluminization. A Filament Deposition system is then used for aluminization by melting and evaporating aluminum which is pre-loaded on a array of tungsten filaments.

1. **The Mirror Coater consists of the following:**
   - 1.1. Main vacuum vessel
     - 1.1.1. Vacuum Vessel: 13.2' high by 13.9' wide stainless steel cylinder with 3-leg floor mount, with approx. 28 peripheral surface vacuum seals
     - 1.1.2. Vacuum Vessel Top Head: 2.6' high by 13.9' wide, with lift lugs
     - 1.1.3. Numerous passive components internal & external to Main Vacuum Vessel
       - 1.1.3.1. Mirror Seals (fixed and movable)
       - 1.1.3.2. Mirror Support Assembly (3 brackets)
       - 1.1.3.3. Internal Platform (floor assembly)
       - 1.1.3.4. Manway (24")
       - 1.1.3.5. Platform and Ladder Assemblies

   - 1.2. Rough pumping system
     - 1.2.1. Two-stage conventional vacuum pumps (Roots Blower, 500 m^3/hr + Rotary Piston Pump, 200 m^3/hr)
     - 1.2.2. 6" rigid roughing line
     - 1.2.3. Two 2" rigid cryopump roughing lines
     - 1.2.4. Pump vent system

   - 1.3. Meissner Trap system
     - 1.3.1. Two LN_2 cooled Meissner Traps (internal to Main Vacuum Vessel, 3.5 m^2 each)
     - 1.3.2. Conventional ¾" (insulated) plumbing
     - 1.3.3. Two waste GN_2 vents

1.4. Cryopump system
- 1.4.1. Two GHe refrigerated light molecule traps (CVI 20” each)
- 1.4.2. Two GHe compressors with 1” flex lines (CVI 5.5 KW each)

1.5. Glow discharge system
- 1.5.1. GAr supply lines
- 1.5.2. Glowrod Assembly (internal to Main Vacuum Vessel)
- 1.5.3. High Voltage DC Supply (3 KW)

1.6. Deposition system
- 1.6.1.1. Filament Array (internal to Main Vacuum Vessel, bus bars + 63 tungsten filament mounts)
- 1.6.1.2. Filament Power Supply (63 KW)
- 1.6.1.3. Deposition thickness sensor

1.7. Vent system

1.8. Control system
- 1.8.1. PLC with touch screen interface
- 1.8.2. Vacuum gauge and thickness sensor controllers
- 1.8.3. Mirror temperature sensor
- 1.8.4. Five vacuum gauge clusters
- 1.8.5. Ten automated valves + eleven hand valves
- 1.8.6. Computer interface to PLC
- 1.8.7. Power cabinet, controls cabinet
- 1.8.8. Dozens of instrumentation cables wired around the chamber itself
- 1.8.9. Hundreds of signal wires between the control cabinet and the power cabinet

1.9. Power systems
- 1.9.1. Main electrical supply
- 1.9.2. Main and backup pneumatic supply
- 1.9.3. High voltage, low current supply for glow discharge
- 1.9.4. Low voltage, high current supply for deposition

1.10. Vacuum Vessel Top Head Support Frame

2. **Additional GSE**: These tools and equipment are used for handling the Primary Mirror Assembly (PMA) and preparing and coating the Primary Mirror

2.1. PMA Lifting Device (PLD)
2.2. Second Load path Structure (SLS)
2.3. Tertiary Mirror Pedestal Positioning Device
2.4. Dummy PMA
2.5. Dummy PM
2.6. Coating Test Bracket (an arc-shaped structure that holds coating samples)

2.7. PM Cleaning Scaffolding
2.8. Inner and Outer Stripping Seals
2.9. PMA/MCF Interface components – Pads
2.10. Fluid Catchment hardware
2.11. Other Lab furnishings, stools, clean room vacuum cleaner, lighting

PMA Lifting Device (PLD)

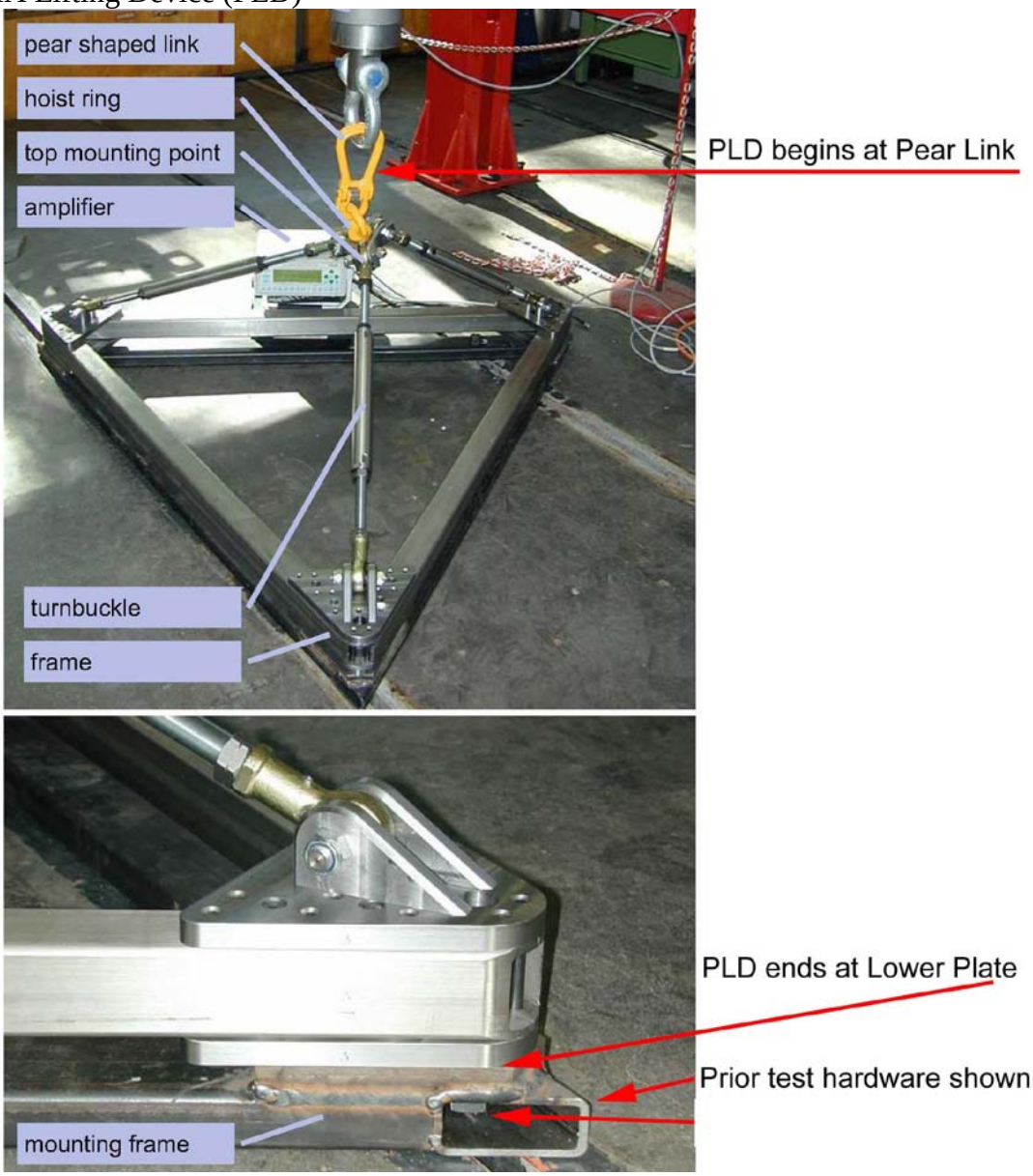

Second Loadpath Structure (SLS), in custom container

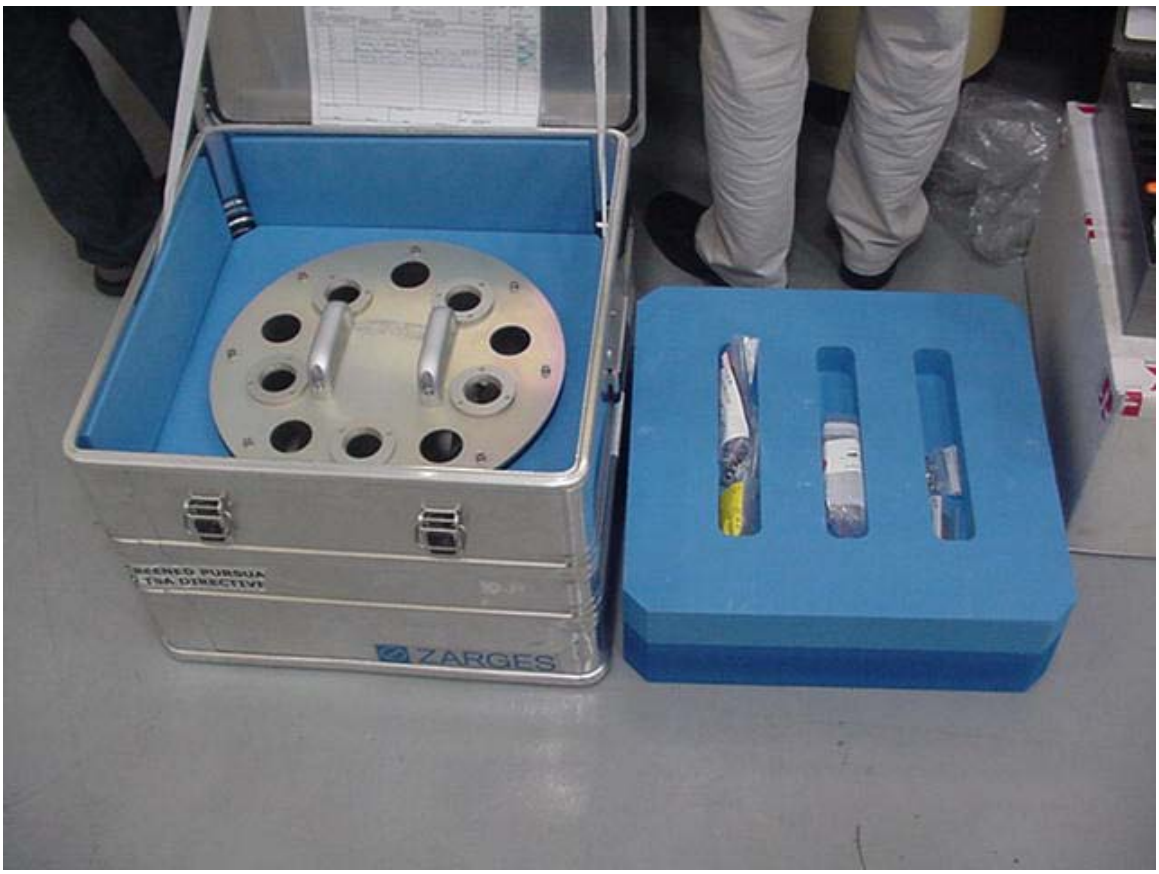

Tertiary Mirror Pedestal Positioning Device (TMPD), shown be lowered to hangar floor.

Dummy PMA (shown before 4” feet installed)

Dummy PM, a mockup of the 2.7 m primary made of light weight polycarbonate panels, approx. 50 lbs.

Coating Test bracket is the arc-shaped bracket just left of center in the photo below.

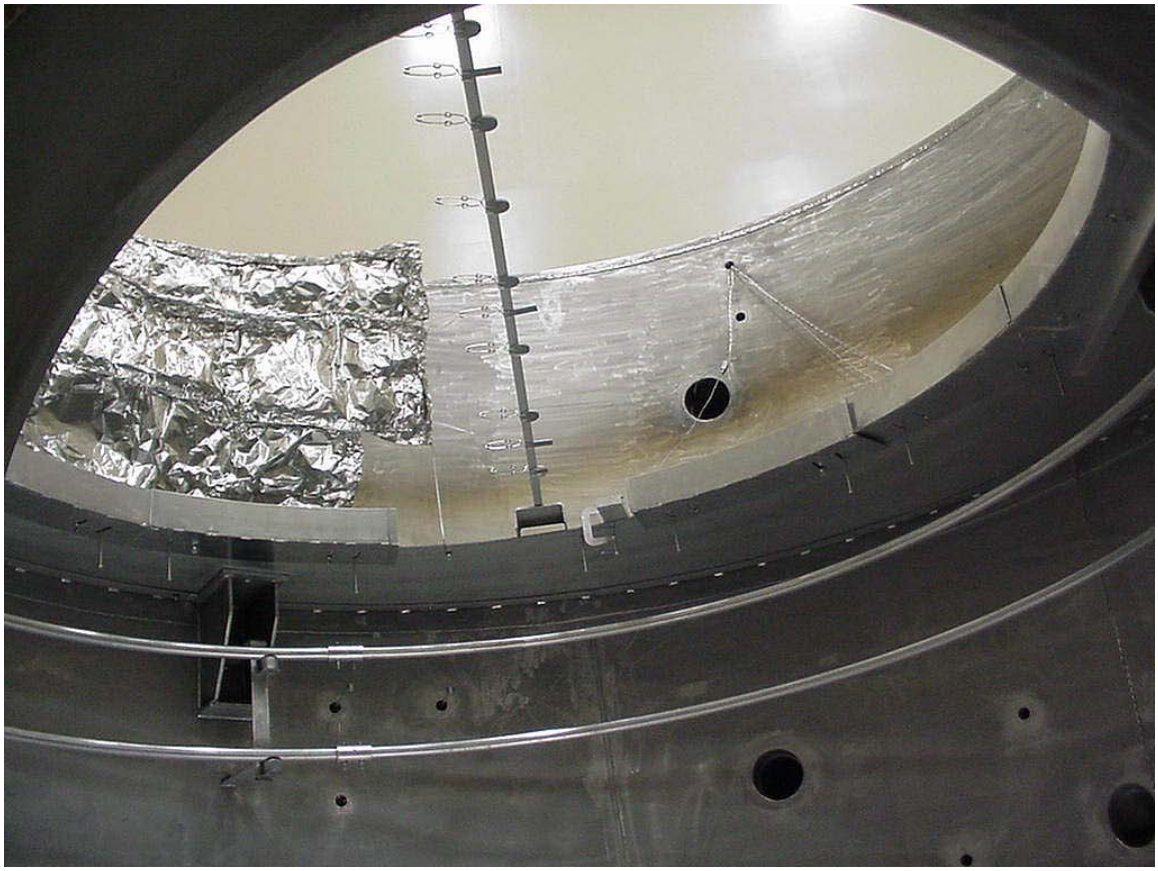

PM Cleaning scaffolding.

Below, the Inner Stripping Seal is shown in place in the center of the Primary Mirror

The Outer Stripping Seal

PMA/MCF Interface components – Pads

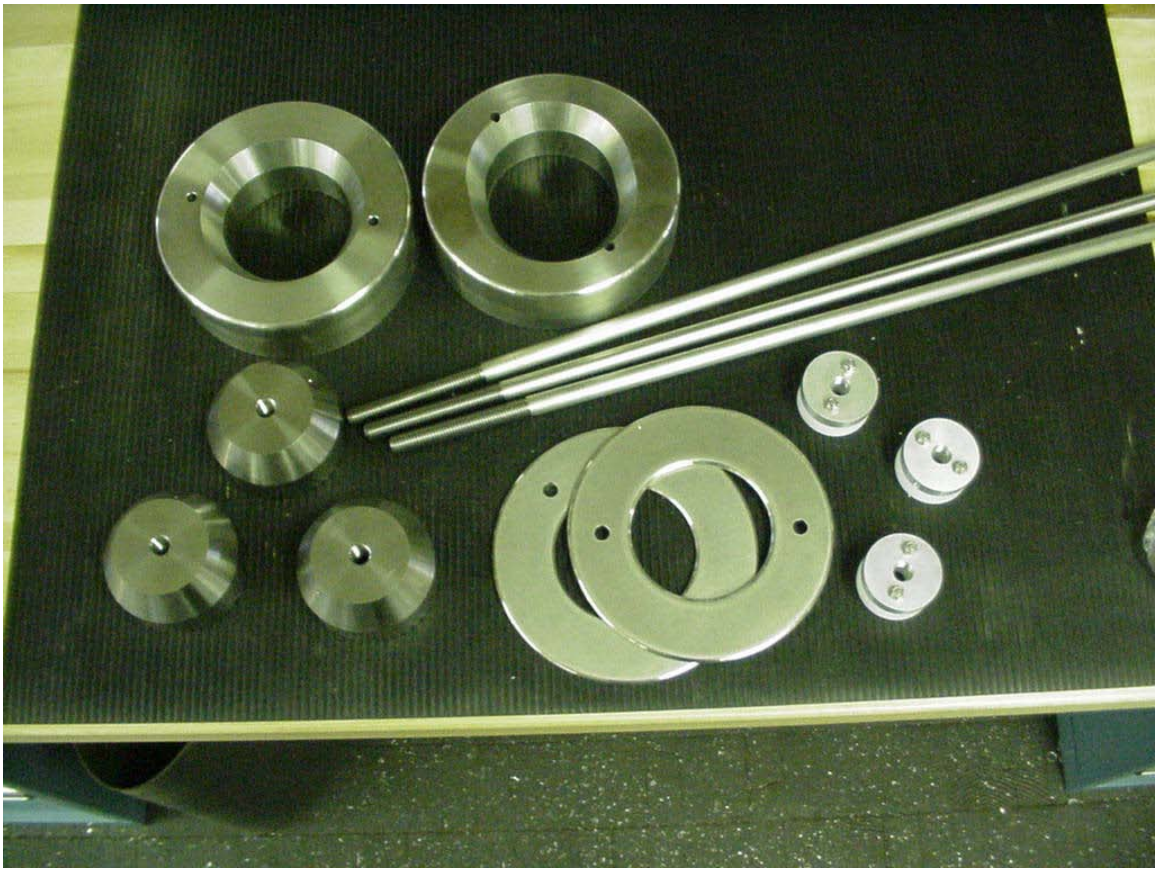

Equipment Layout in Existing Facility

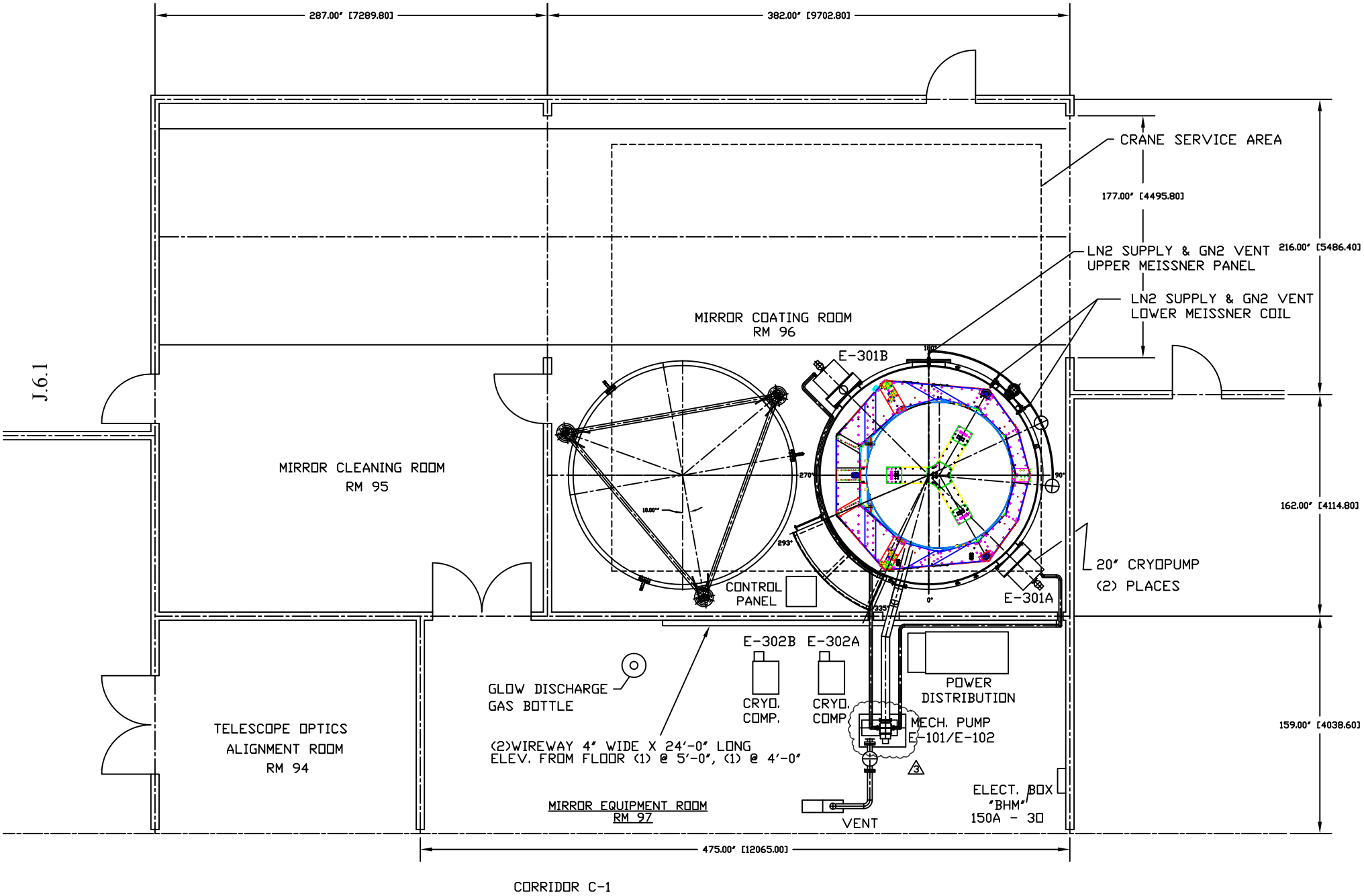

J.6.1

Vacuum Vessel

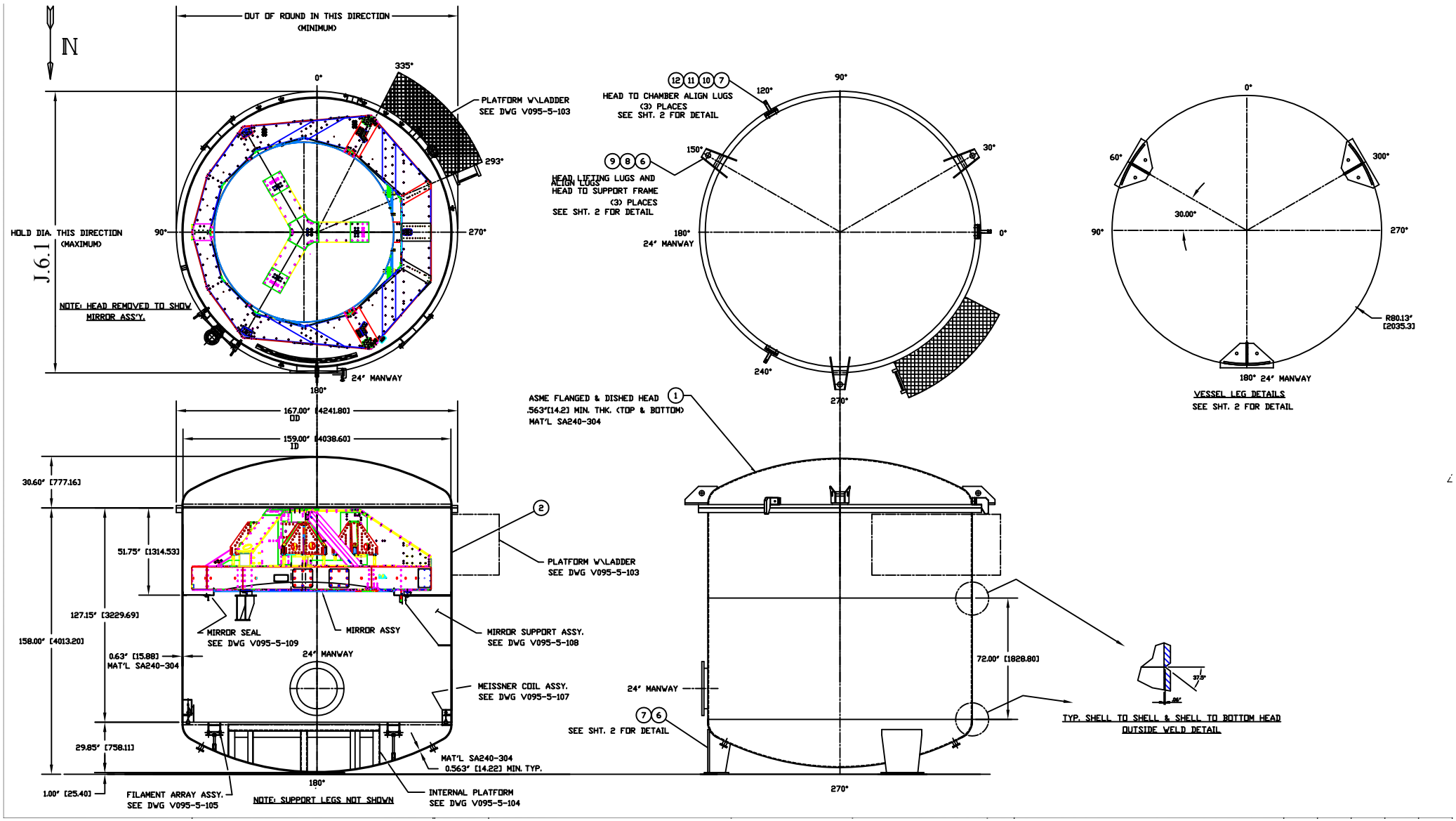

Filament Array

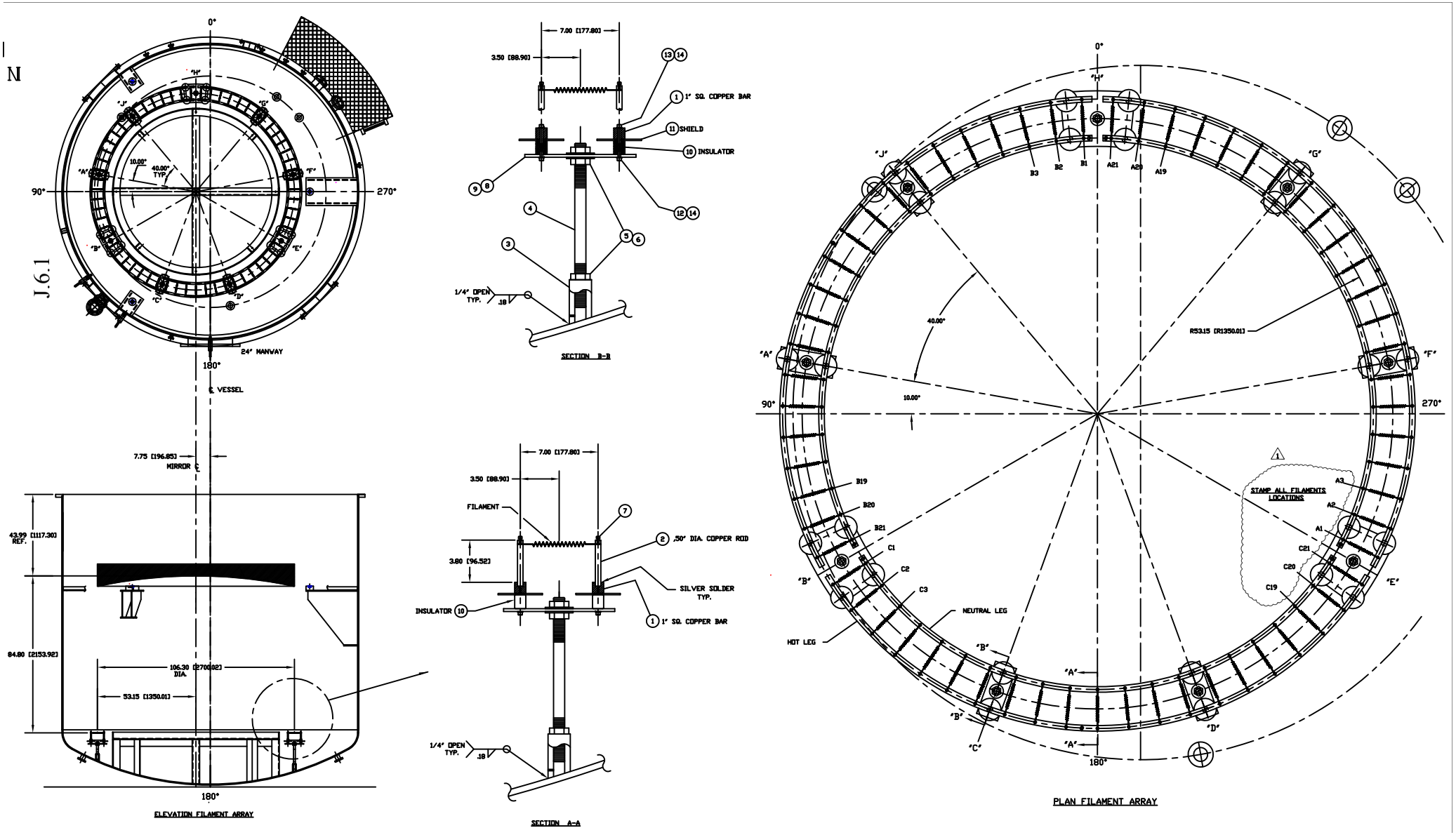

N

J.6.1

Glowrod Assembly

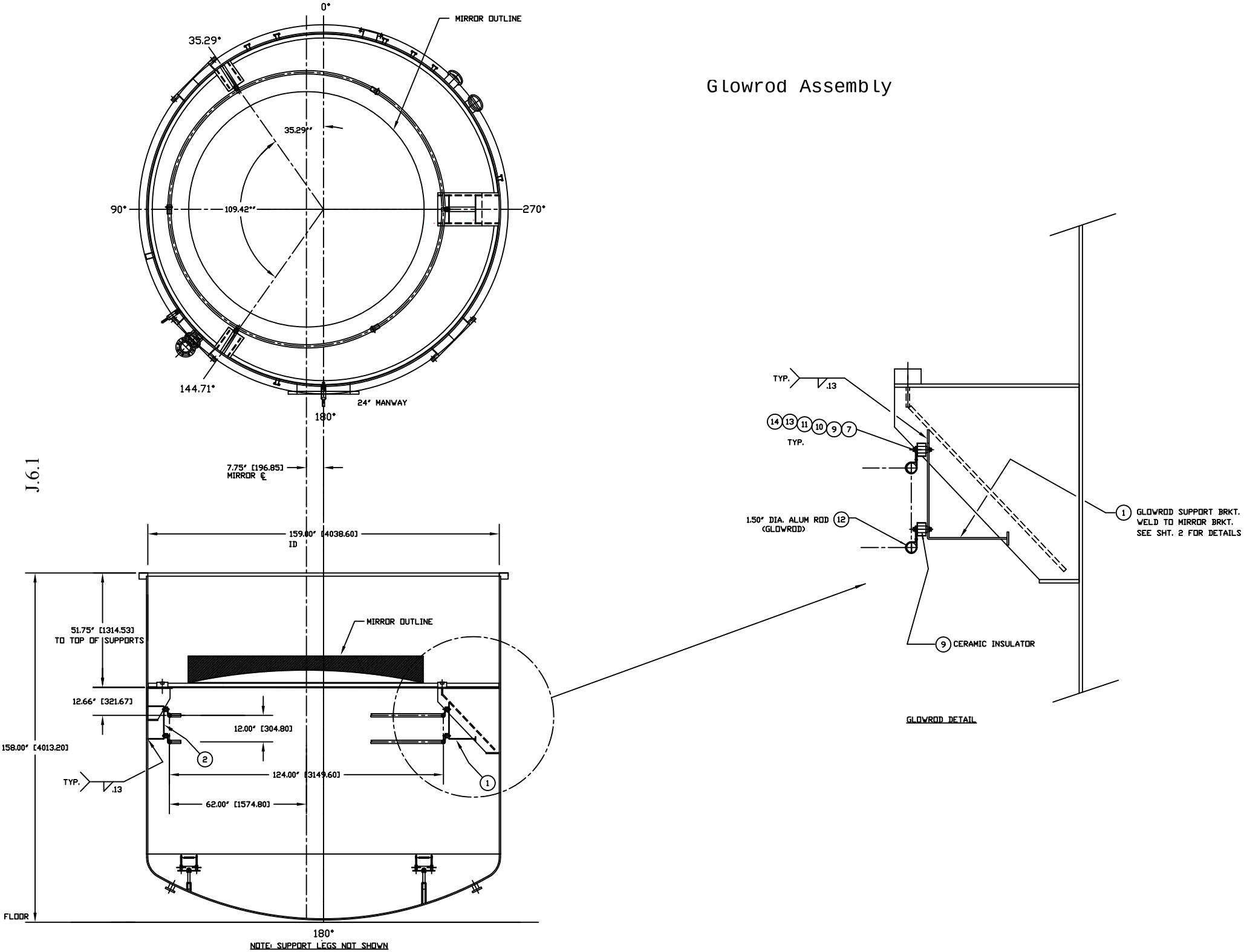

J.6.1

Meissner Coils Subassembly

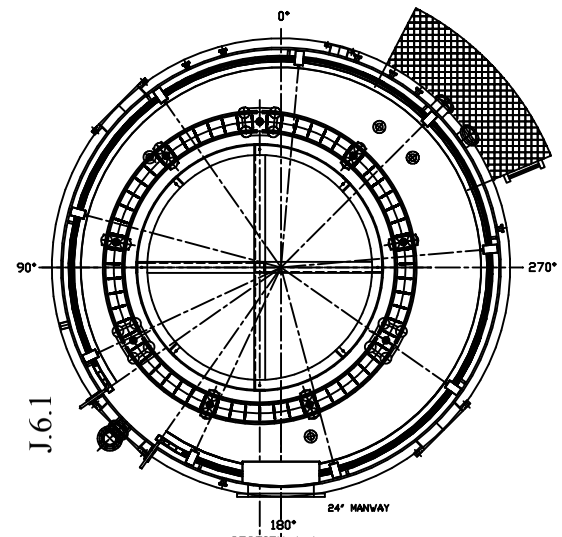

SECTION A-A

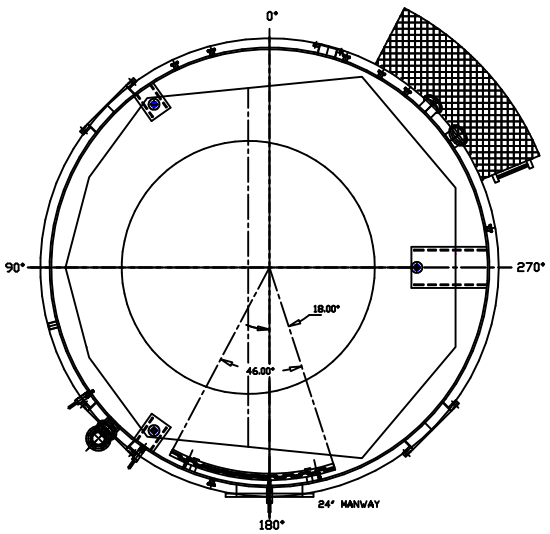

SECTION B-B

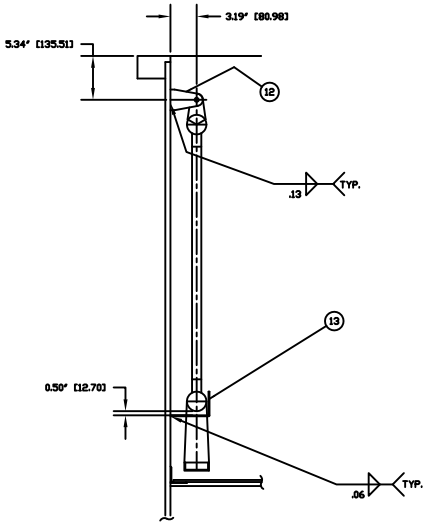

HANGING DETAIL UPPER MEISSNER PANEL

J.6.1

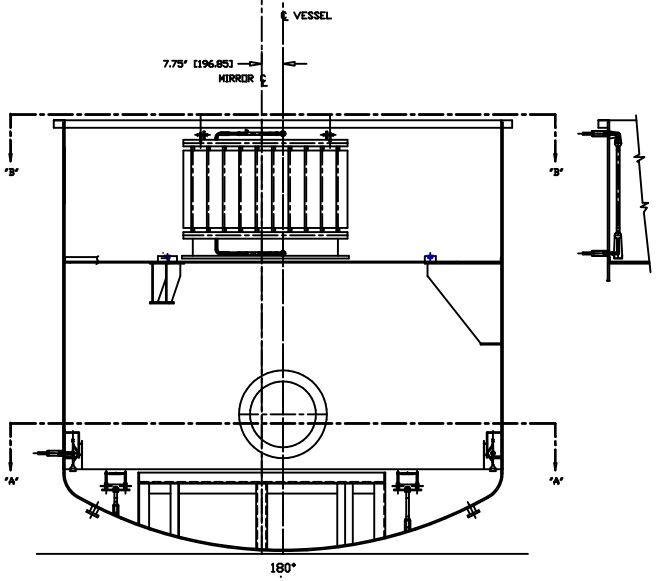

ELEVATION MEISSNER COIL

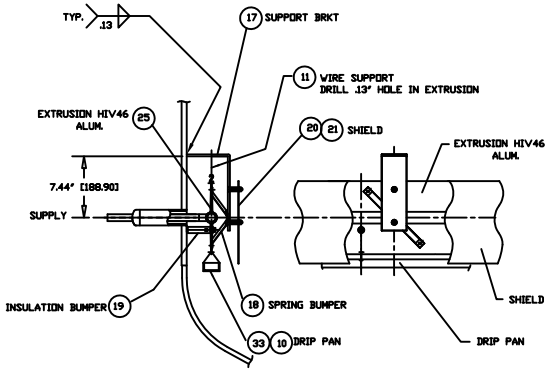

LOWER MEISSNER COIL

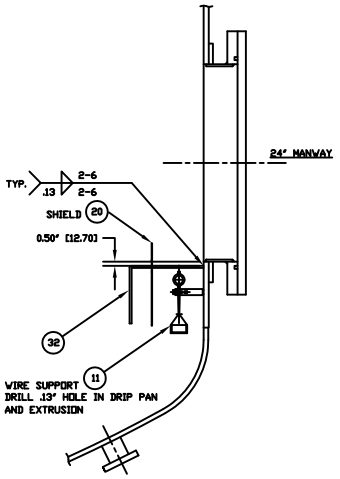

LOWER MEISSNER COIL AT MANWAY

NOTES

1. DESIGN PRESSURE 150 PSIG
2. PNEUMATIC TEST PRESSURE 180 PSIG
3. LEAK TEST & METHOD PER PSI SPEC: V095-2-053