THE INFORMATION CONTAINED IN THIS DRAWING IS THE SOLE PROPERTY OF NASA/AMES RESEARCH CENTER ANY REPRODUCTION IN PART OR WHOLE WITHOUT THE WRITTEN PERMISSION OF NASA/AMES RESEARCH CENTER IS PROHIBITED.

REVISIONS			
REV.	DESCRIPTION	DATE	APPROVED
-	INITIAL RELEASE	06/20/11	JOSE C.

NOTES:

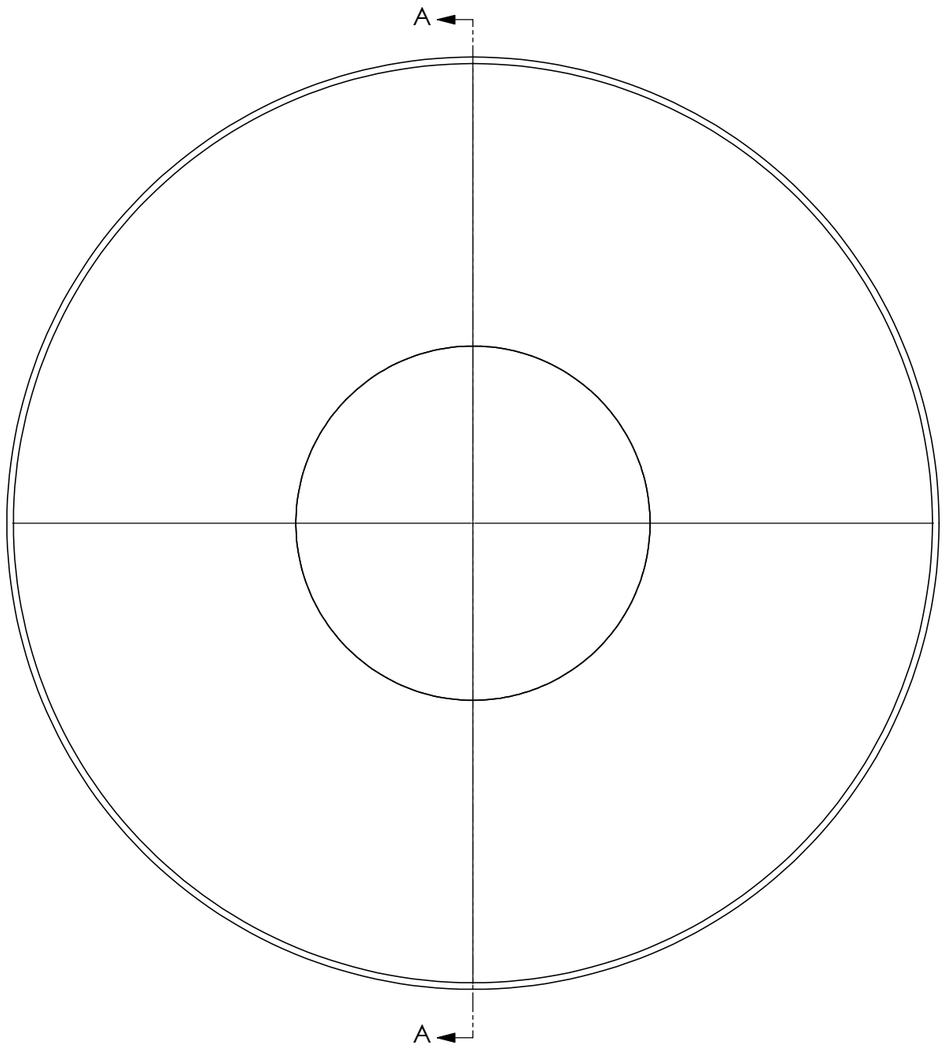

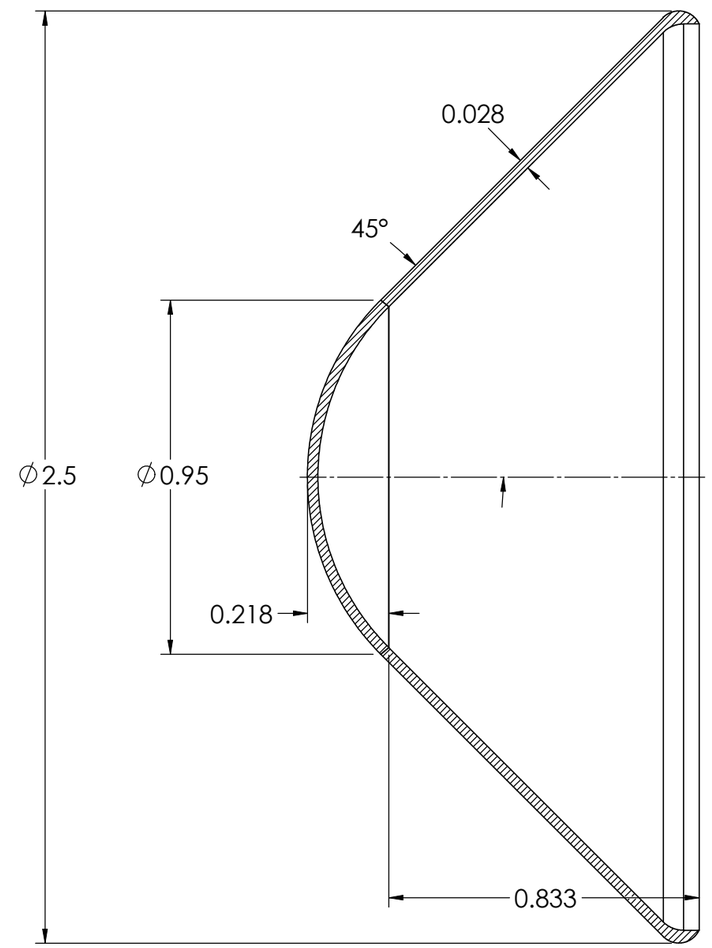

SECTION A-A

ITEM NO.	PART OR IDENTIFYING NO.	NOMENCLATURE OR DESCRIPTION	MATERIAL SPECIFICATION	QTY REQD

UNLESS OTHERWISE SPECIFIED DIMENSIONS ARE IN **METERS.** ALL DIMENSIONS AND TOLERANCES APPLY AFTER SURFACE TREATMENT

TOLERANCE UNLESS OTHERWISE SPECIFIED:

FRACTIONS	DECIMALS	ANGLES
±1/64	.X ± 0.1	±1
	.XX ± 0.01	
	.XXX ± 0.005	

BREAK SHARP CORNERS 0.02 MAX

MATERIAL

--

ALL MACHINED SURFACES TO BE 64 ✓ EXCEPT WHERE NOTED

APPROVALS	SIGNATURES	DATE
ORIGINATOR / DESIGNER JOSE CHAVEZ-GARCIA		
CHECKED		
THERMAL TESTING LEAD		
HEAT SHIELD MANAGER		
REQUESTOR		
R & QA		
SAFETY		
SUPERVISOR		

NEXT ASSY	USED ON

APPLICATION

DO NOT SCALE DRAWING

Ames Research Center
Moffett Field, CA 94035

TITLE

PROBE 2.5

SIZE	DWG. NO.	REV.
D		-
SCALE 1:8	PART NUMBER:	SHEET 1 OF 1

THE INFORMATION CONTAINED IN THIS DRAWING IS THE SOLE PROPERTY OF NASA/AMES RESEARCH CENTER ANY REPRODUCTION IN PART OR WHOLE WITHOUT THE WRITTEN PERMISSION OF NASA/AMES RESEARCH CENTER IS PROHIBITED.

REVISIONS			
REV.	DESCRIPTION	DATE	APPROVED
-	INITIAL RELEASE	06/20/11	JOSE C.

NOTES:

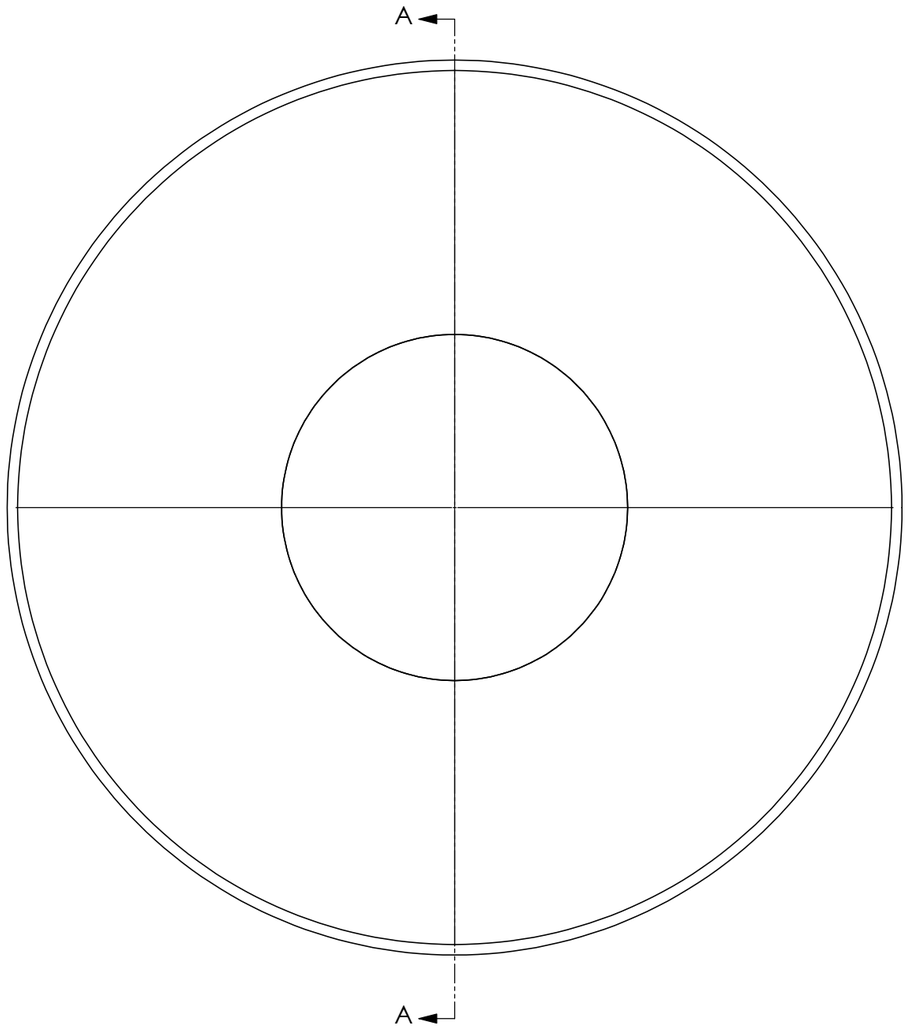

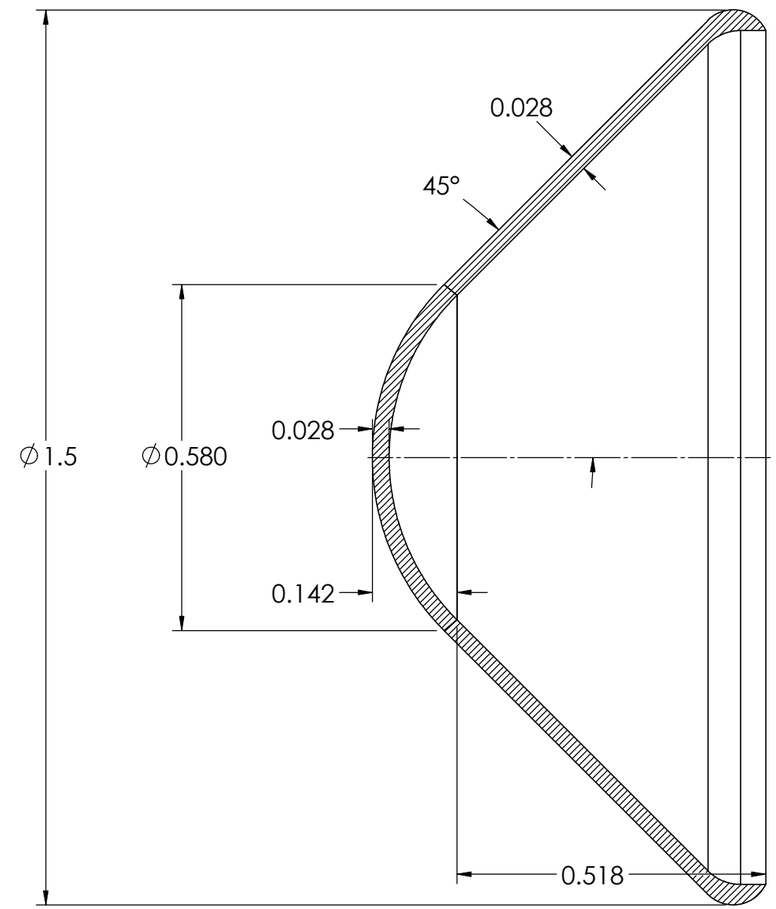

SECTION A-A

ITEM NO.	PART OR IDENTIFYING NO.	NOMENCLATURE OR DESCRIPTION	MATERIAL SPECIFICATION	QTY REQD

UNLESS OTHERWISE SPECIFIED DIMENSIONS ARE IN **METERS.** ALL DIMENSIONS AND TOLERANCES APPLY AFTER SURFACE TREATMENT

TOLERANCE UNLESS OTHERWISE SPECIFIED:

FRACTIONS	DECIMALS	ANGLES
±1/64	.X ± 0.1	±1
	.XX ± 0.01	
	.XXX ± 0.005	

BREAK SHARP CORNERS 0.02 MAX

MATERIAL

--

ALL MACHINED SURFACES TO BE 64 ✓ EXCEPT WHERE NOTED

APPROVALS	SIGNATURES	DATE
ORIGINATOR / DESIGNER JOSE CHAVEZ-GARCIA		
CHECKED		
THERMAL TESTING LEAD		
HEAT SHIELD MANAGER		
REQUESTOR		
R & QA		
SAFETY		
SUPERVISOR		

NEXT ASSY	USED ON
APPLICATION	

DO NOT SCALE DRAWING

Ames Research Center
Moffett Field, CA 94035

TITLE

PROBE 1.5

SIZE	DWG. NO.	REV.
D		-
SCALE 1:5	PART NUMBER:	SHEET 1 OF 1

THE INFORMATION CONTAINED IN THIS DRAWING IS THE SOLE PROPERTY OF NASA/AMES RESEARCH CENTER ANY REPRODUCTION IN PART OR WHOLE WITHOUT THE WRITTEN PERMISSION OF NASA/AMES RESEARCH CENTER IS PROHIBITED.

REVISIONS			
REV.	DESCRIPTION	DATE	APPROVED
-	INITIAL RELEASE	06/20/11	JOSE C.

NOTES:

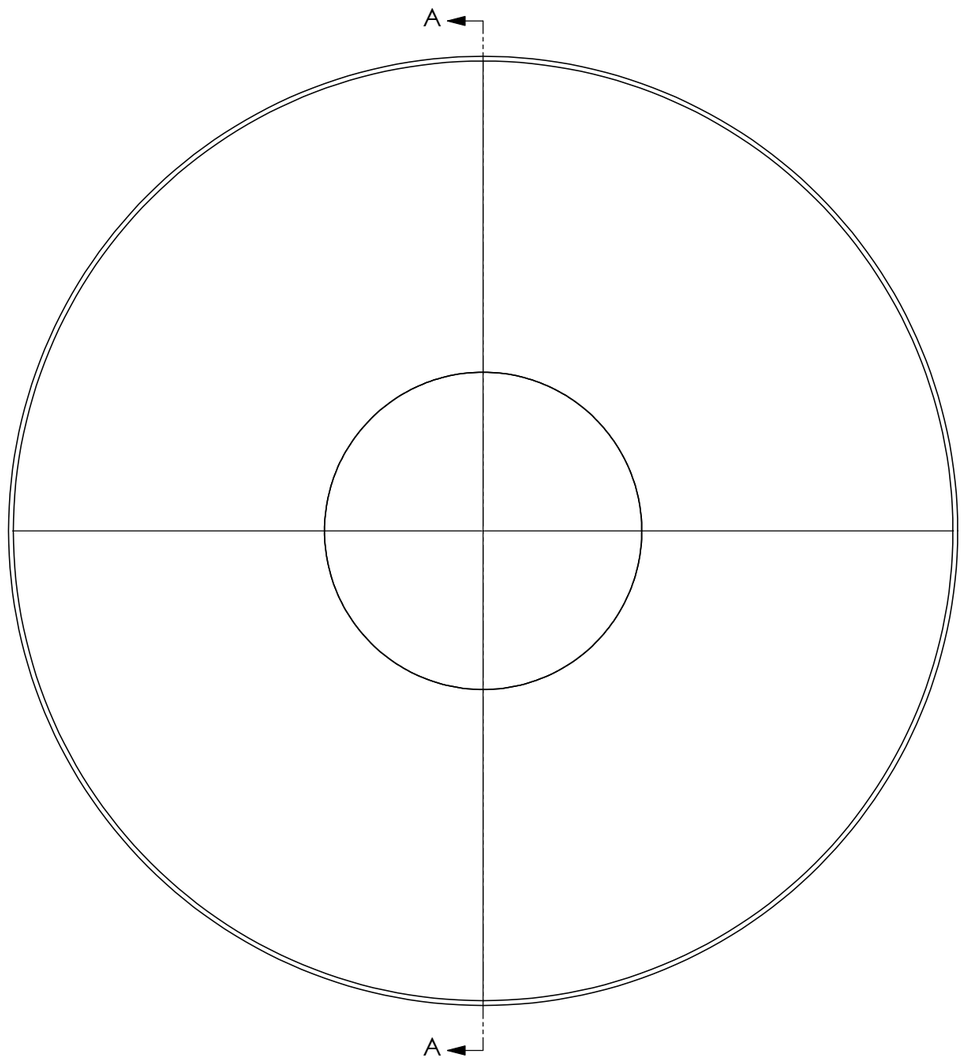

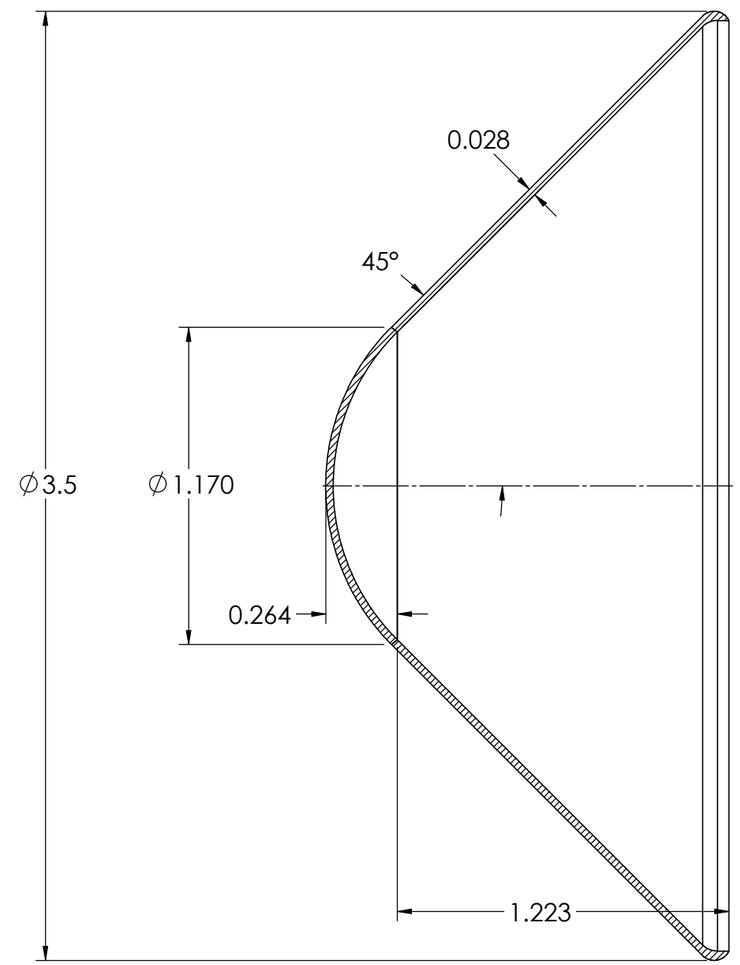

SECTION A-A

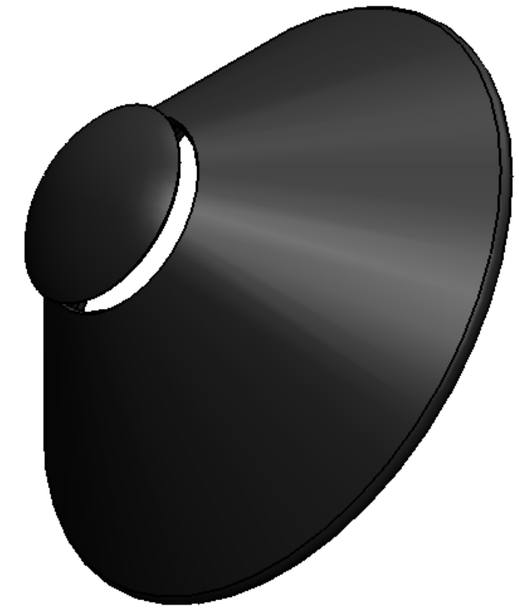

ITEM NO.	PART OR IDENTIFYING NO.	NOMENCLATURE OR DESCRIPTION	MATERIAL SPECIFICATION	QTY REQD

UNLESS OTHERWISE SPECIFIED DIMENSIONS ARE IN **METERS.** ALL DIMENSIONS AND TOLERANCES APPLY AFTER SURFACE TREATMENT

TOLERANCE UNLESS OTHERWISE SPECIFIED:

FRACTIONS	DECIMALS	ANGLES
±1/64	.X ± 0.1	±1
	.XX ± 0.01	
	.XXX ± 0.005	

BREAK SHARP CORNERS 0.02 MAX

MATERIAL

--

ALL MACHINED SURFACES TO BE 64 ✓ EXCEPT WHERE NOTED

APPROVALS	SIGNATURES	DATE
ORIGINATOR / DESIGNER JOSE CHAVEZ-GARCIA		
CHECKED		
THERMAL TESTING LEAD		
HEAT SHIELD MANAGER		
REQUESTOR		
R & QA		
SAFETY		
SUPERVISOR		

NEXT ASSY	USED ON

APPLICATION

DO NOT SCALE DRAWING

Ames Research Center
Moffett Field, CA 94035

TITLE

PROBE 3.5

SIZE	DWG. NO.	REV.
D		-

SCALE 1:1 | PART NUMBER: | SHEET 1 OF 1

THE INFORMATION CONTAINED IN THIS DRAWING IS THE SOLE PROPERTY OF NASA/AMES RESEARCH CENTER ANY REPRODUCTION IN PART OR WHOLE WITHOUT THE WRITTEN PERMISSION OF NASA/AMES RESEARCH CENTER IS PROHIBITED.

REVISIONS			
REV.	DESCRIPTION	DATE	APPROVED
-	INITIAL RELEASE	06/20/11	JOSE C.

NOTES:

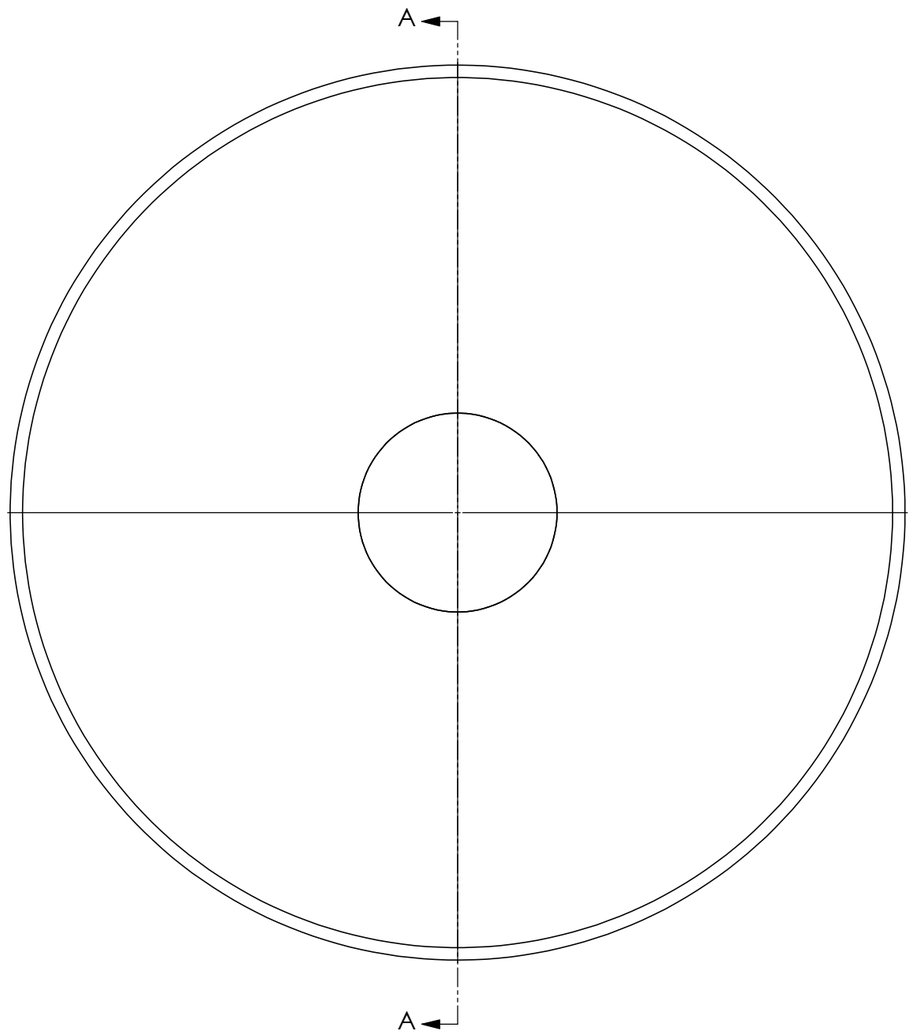

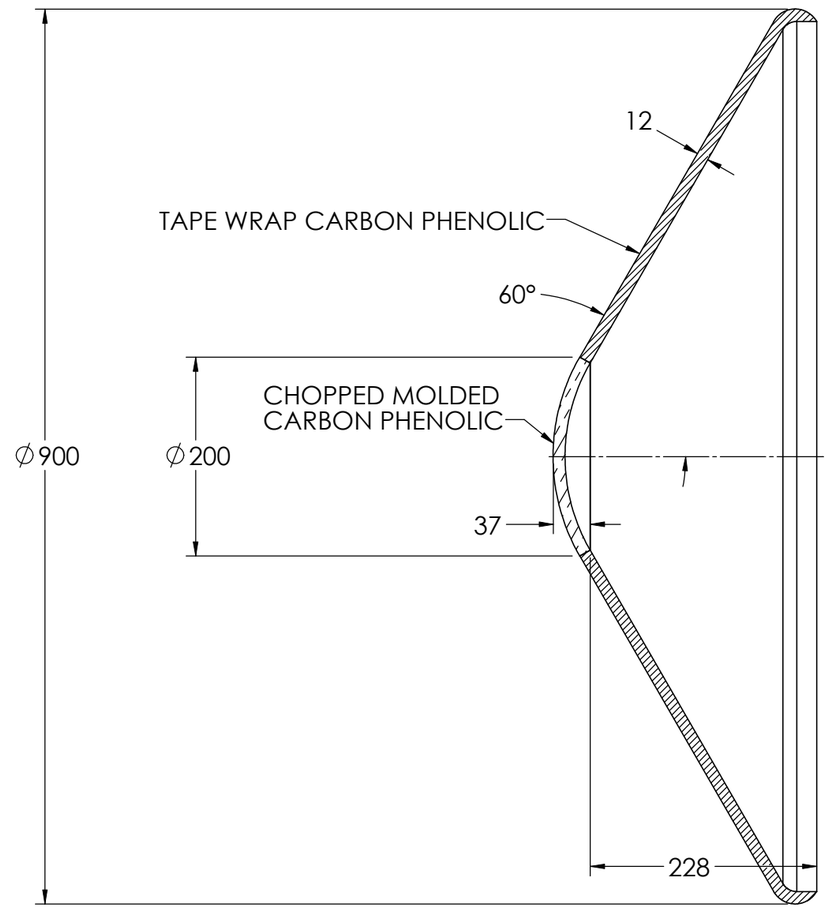

SECTION A-A

ITEM NO.	PART OR IDENTIFYING NO.	NOMENCLATURE OR DESCRIPTION	MATERIAL SPECIFICATION	QTY REQD
NEXT ASSY	USED ON			
APPLICATION				

UNLESS OTHERWISE SPECIFIED DIMENSIONS ARE IN **MM.** ALL DIMENSIONS AND TOLERANCES APPLY AFTER SURFACE TREATMENT

TOLERANCE UNLESS OTHERWISE SPECIFIED:

FRACTIONS	DECIMALS	ANGLES
±1/64	.X ± 0.1	±1
	.XX ± 0.01	
	.XXX ± 0.005	

BREAK SHARP CORNERS 0.02 MAX

MATERIAL

ALL MACHINED SURFACES TO BE 64 ✓ EXCEPT WHERE NOTED

DO NOT SCALE DRAWING

APPROVALS	SIGNATURES	DATE
ORIGINATOR / DESIGNER		
CHECKED		
THERMAL TESTING LEAD		
HEAT SHIELD MANAGER		
REQUESTOR		
R & QA		
SAFETY		
SUPERVISOR		

Ames Research Center
Moffett Field, CA 94035

TITLE

MSR-EEV

SIZE	DWG. NO.	REV.
D		-
SCALE 1:3	PART NUMBER:	SHEET 1 OF 1