DRAWING LIST

DRAWING NUMBER: DRAWING CODE	DRAWING NUMBER: BALLOON NO	DESCRIPTION	QTY/ ASSY
G46710MRA250		SMALL TRANSITION DUCT/ CAMERA DUCT MATCH ASSEMBLY	1
G46710MRA106		ALIGNMENT PIN	2
G46710MRA200		SMALL TRANSITION DUCT WELDMENT ASSEMBLY	1
G46710MRA320		CAMERA DUCT WELDMENT ASSEMBLY	1

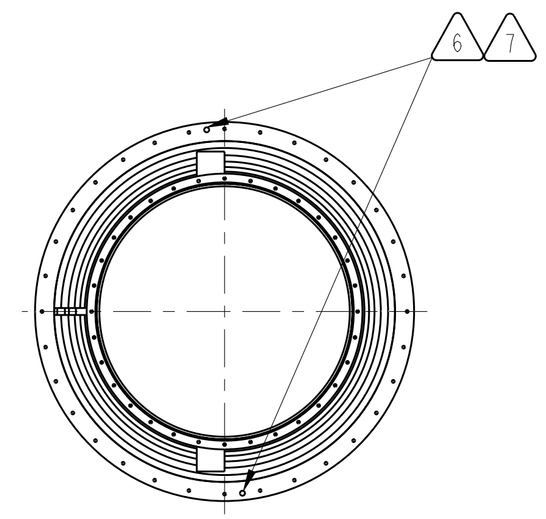

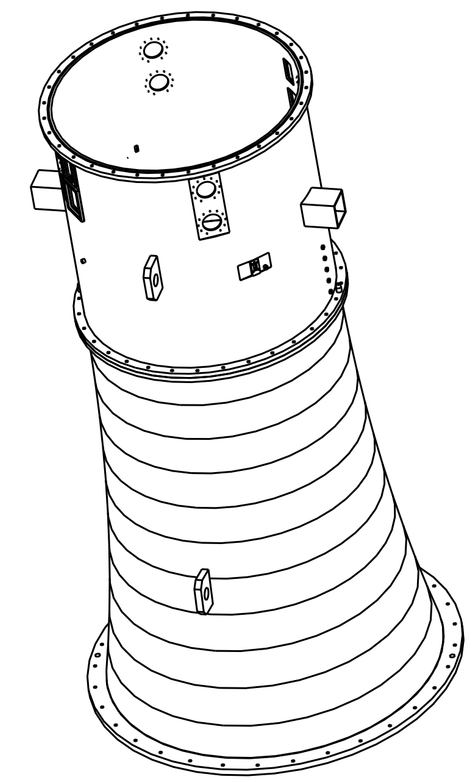

1. ORIENT ITEM A200 SO THAT THE WIDE END OF THE DUCT RESTS ON THE FLOOR.
2. LOWER ITEM A320 ONTO ITEM A200. ORIENT ITEM A320 SO THAT THE LIFTING LUGS OF BOTH DUCT SECTIONS ARE COPLANAR.
3. LOOSELY BOLT THE TWO DUCT SECTIONS TOGETHER USING 3/8"-16 X 2-3/4" LG. CAP SCREWS AND NUTS.
4. ADJUST ITEM A320 SO THAT THE INSIDE SURFACES OF THE TWO DUCTS LINE UP AS CLOSELY AS POSSIBLE. TIGHTEN CAP SCREWS.
5. HAND-GRIND INSIDE SURFACES OF DUCT SECTIONS AROUND INTERFACE IF NECESSARY TO OBTAIN A SMOOTH TRANSITION BETWEEN DUCT SECTIONS.
6. USING THE (2) .718 DIA. ALIGNMENT HOLES ON ITEM A320 AS PILOTS, DRILL (2) HOLES THRU BOTH FLANGES FOR A PRESS FIT WITH A .750 DIA. DOWEL PIN.
7. UNBOLT AND SEPARATE DUCT SECTIONS. OPEN UP THE (2) .750 DIA. HOLES IN ITEM A320 ONLY FOR A SNUG FIT (.0005-.0025 CLEARANCE) WITH A .750 DIA. DOWEL PIN.
8. PRESS ITEM A106 INTO FLANGE OF ITEM A200 AS SHOWN (2 PLACES).

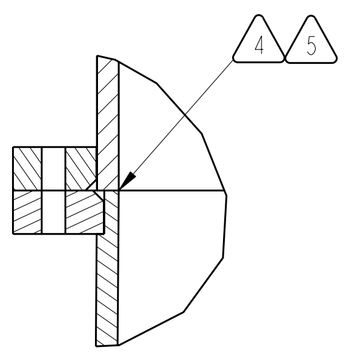

DETAIL A
SCALE 1/2

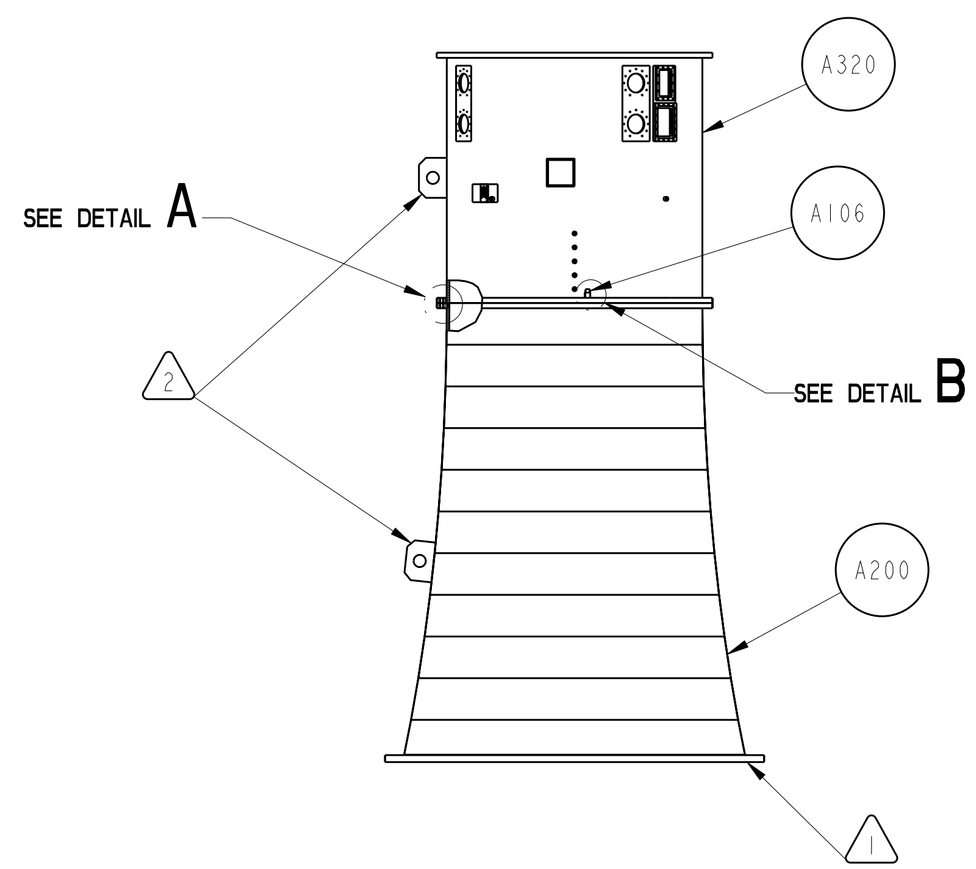

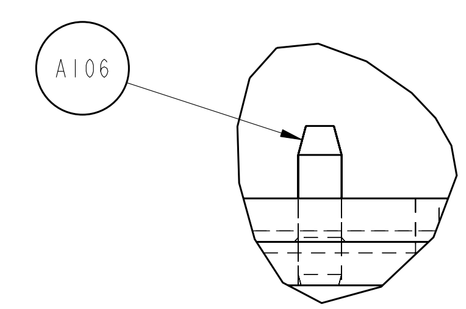

DETAIL B
SCALE 1/2
2 PLACES
8

CHG	ZONE	DESCRIPTION	APP/DATE

REVISIONS

PRIOR TO USE VERIFY THE INTENDED PURPOSE IN PDM ("FOR" ATTRIBUTE)

UNLESS OTHERWISE SPECIFIED DIMENSIONS ARE IN INCHES

TOLERANCE ON	
.X	± 0.03
.XX	± 0.01
.XXX	± 0.005
FRACTION	± -
ANGULAR	± 0.50°
BREAK EDGES	.010-.020

CONTRACT	NNC06BA07B
CONTRACTOR	ASRC AEROSPACE
TASK ORDER	G467
DRAFTER	ASRC/PN
ENGINEER	ASRC/PN
DESIGNER	ASRC/PN

DIMENSIONING AND TOLERANCING PER ASME Y14.5M-1994

NATIONAL AERONAUTICS AND SPACE ADMINISTRATION
JOHN H. GLENN RESEARCH CENTER
LEWIS FIELD
CLEVELAND, OHIO

PSL ICING TOP ASSEMBLY

G46710MRA000

A250 SMALL TRANSITION DUCT/ CAMERA DUCT MATCH ASSEMBLY

PDM REL LEVEL: PDM REVISION:

PDM DATABASE:
MODEL NAME: G46710MRA250_TRNS_CAM_DCT_MTCH

CHECK FOR ANY OUTSTANDING ECO'S PRIOR TO USE

SIZE	DRAWING NUMBER	REV	BLDG	AREA
D	G46710MRA250	-	125	-

UNITS: INCH

SCALE:	INITIAL REL DATE	SHEET	DISCIPLINE
3/50	3/24/2011	1 OF 1	MECHANICAL

PRO/E VERSION: Wildfire 3.0

SIZE D DRAWING NUMBER G46710MRA250 REV -

NAME:PANEWMAN OBJECT:G46710MRA250_TRNS_CAM_DCT_MTCH DATE:28-Mar-11 10:17:03