1. MATERIAL: 304L STAINLESS STEEL PER ASTM A240.

2. DRILL HOLES AFTER STRESS RELIEF PER DRAWING G46710MRA200.

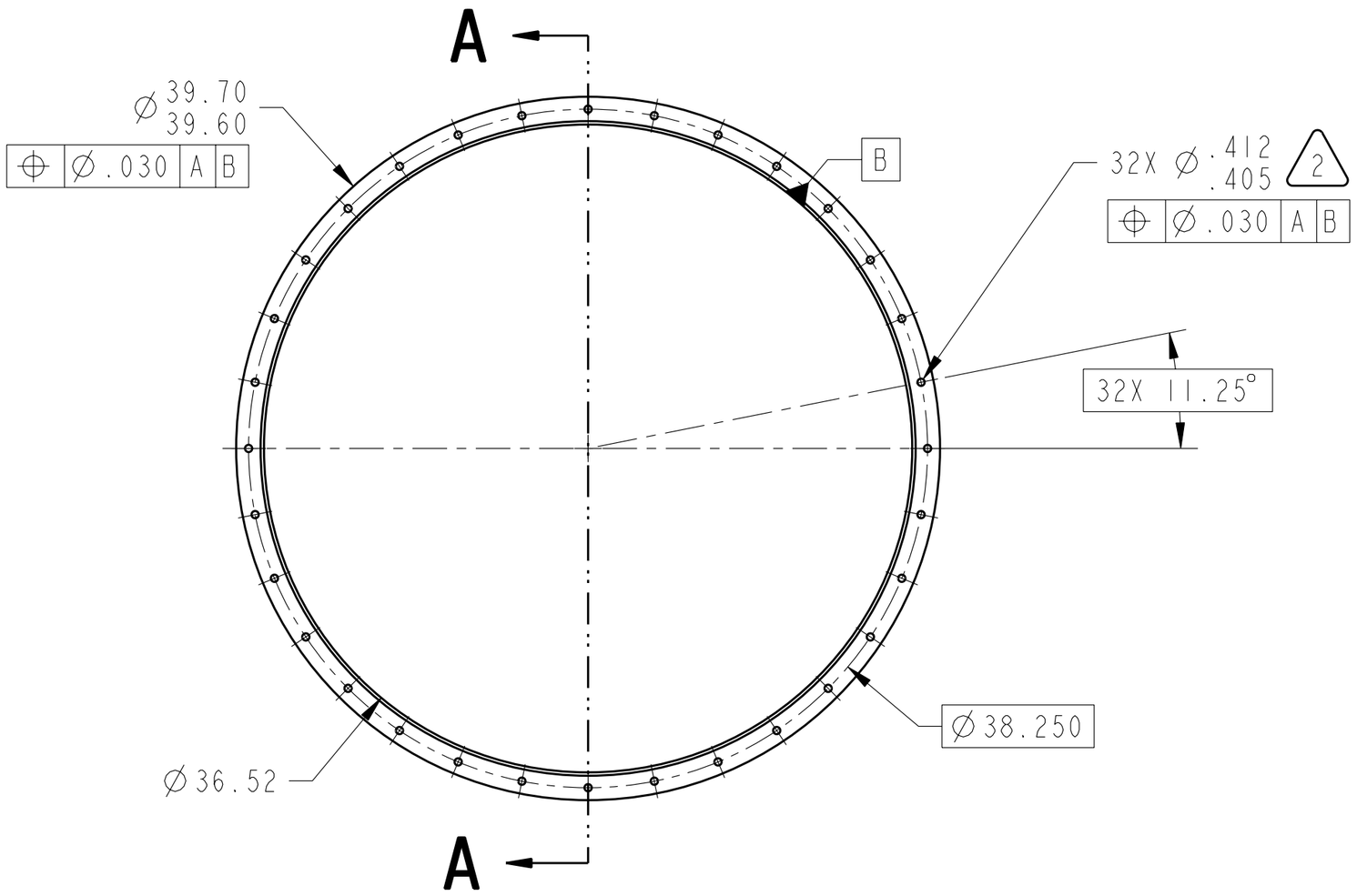

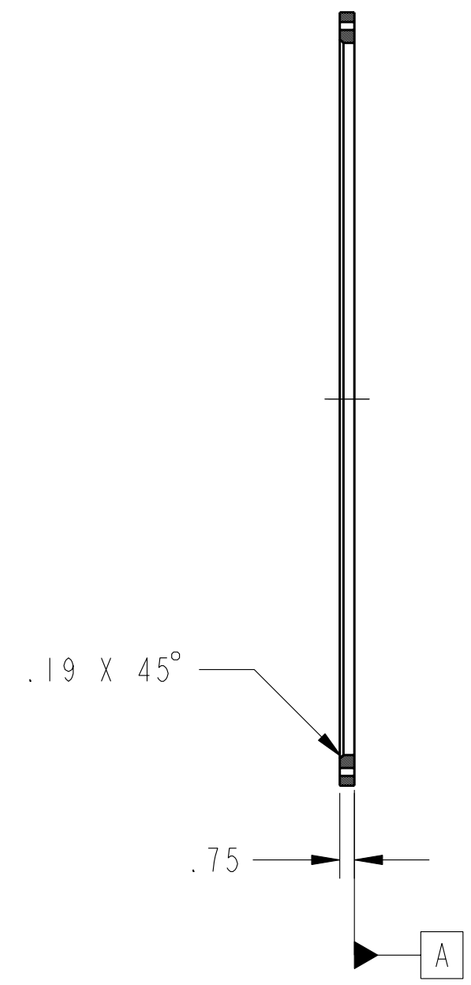

SECTION A-A

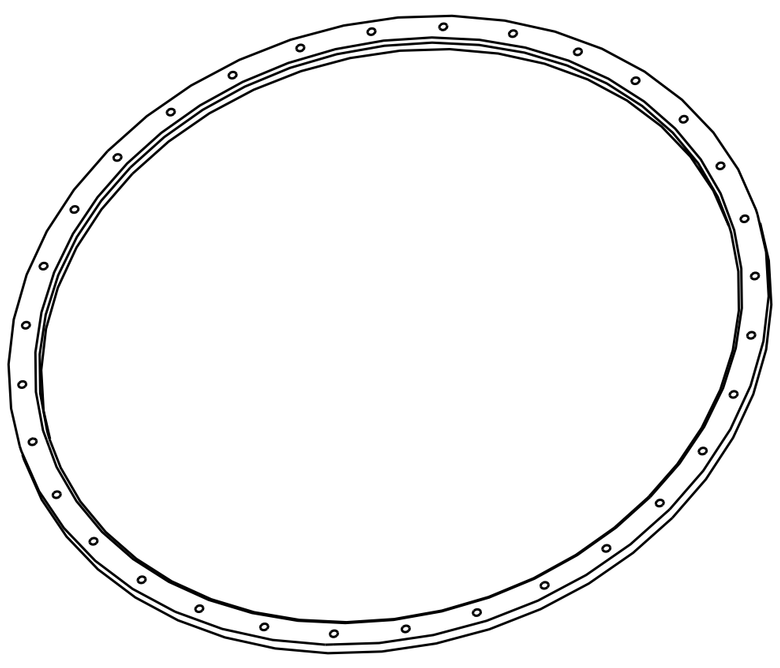

PRIOR TO USE VERIFY THE INTENDED PURPOSE IN PDM ("FOR" ATTRIBUTE)			
UNLESS OTHERWISE SPECIFIED DIMENSIONS ARE IN INCHES		CONTRACT	NNC06BA07B
		CONTRACTOR	ASRC AEROSPACE
TOLERANCE ON		TASK ORDER	G467
.X	± 0.03	DRAFTER	ASRC/PN
.XX	± 0.01	ENGINEER	ASRC/PN
.XXX	± 0.005	DESIGNER	ASRC/PN
FRACTION	± -	DIMENSIONING AND TOLERANCING PER ASME Y14.5M-1994	
ANGULAR	± 0.50°		
BREAK EDGES	.010-.020		

PDM REL LEVEL: PDM REVISION:

PDM DATABASE:

MODEL NAME: G46710MRA203_SM_TRNS_SM_FLG

CHECK FOR ANY OUTSTANDING ECO'S PRIOR TO USE

CHG	ZONE	DESCRIPTION	APP/DATE

REVISIONS

NATIONAL AERONAUTICS AND SPACE ADMINISTRATION
JOHN H. GLENN RESEARCH CENTER
LEWIS FIELD
CLEVELAND, OHIO

SMALL TRANSITION DUCT
WELDMENT ASSEMBLY

G46710MRA200

A203

SMALL TRANSITION DUCT
SMALL FLANGE

SIZE	DRAWING NUMBER	REV	BLDG	AREA
C	G46710MRA203	-	125	-
			UNITS: INCH	
SCALE: 13/100	INITIAL REL DATE 12/4/2010	SHEET 1 OF 1	DISCIPLINE MECHANICAL	

PRO/E VERSION: Wildfire 3.0

SIZE C DRAWING NUMBER G46710MRA203 REV -

NAME:PANEWMAN OBJECT:G46710MRA203_SM_TRNS_SM_FLG DATE:14-Apr-11 13:14:49