1. MATERIAL: 304L STAINLESS STEEL PER ASTM A240.

2. QTY.: (6) REQUIRED

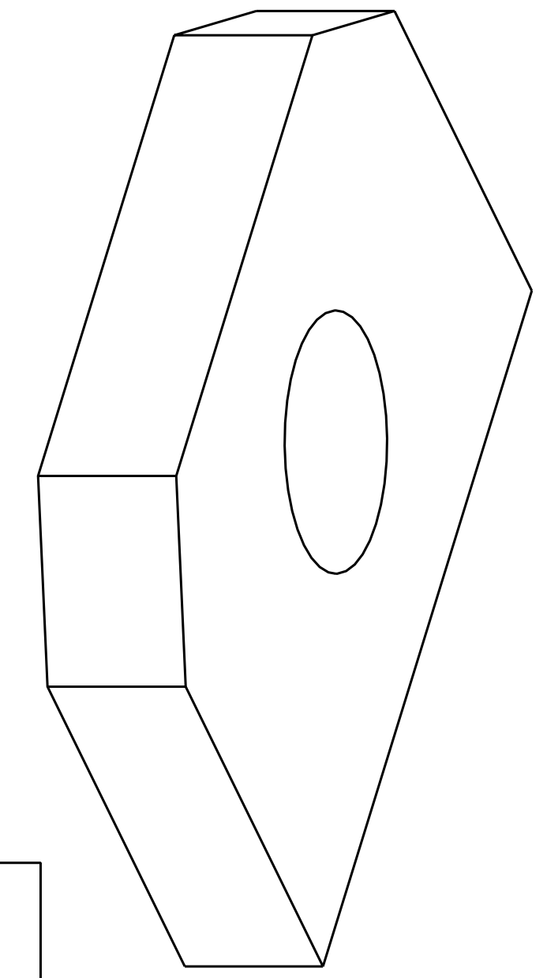

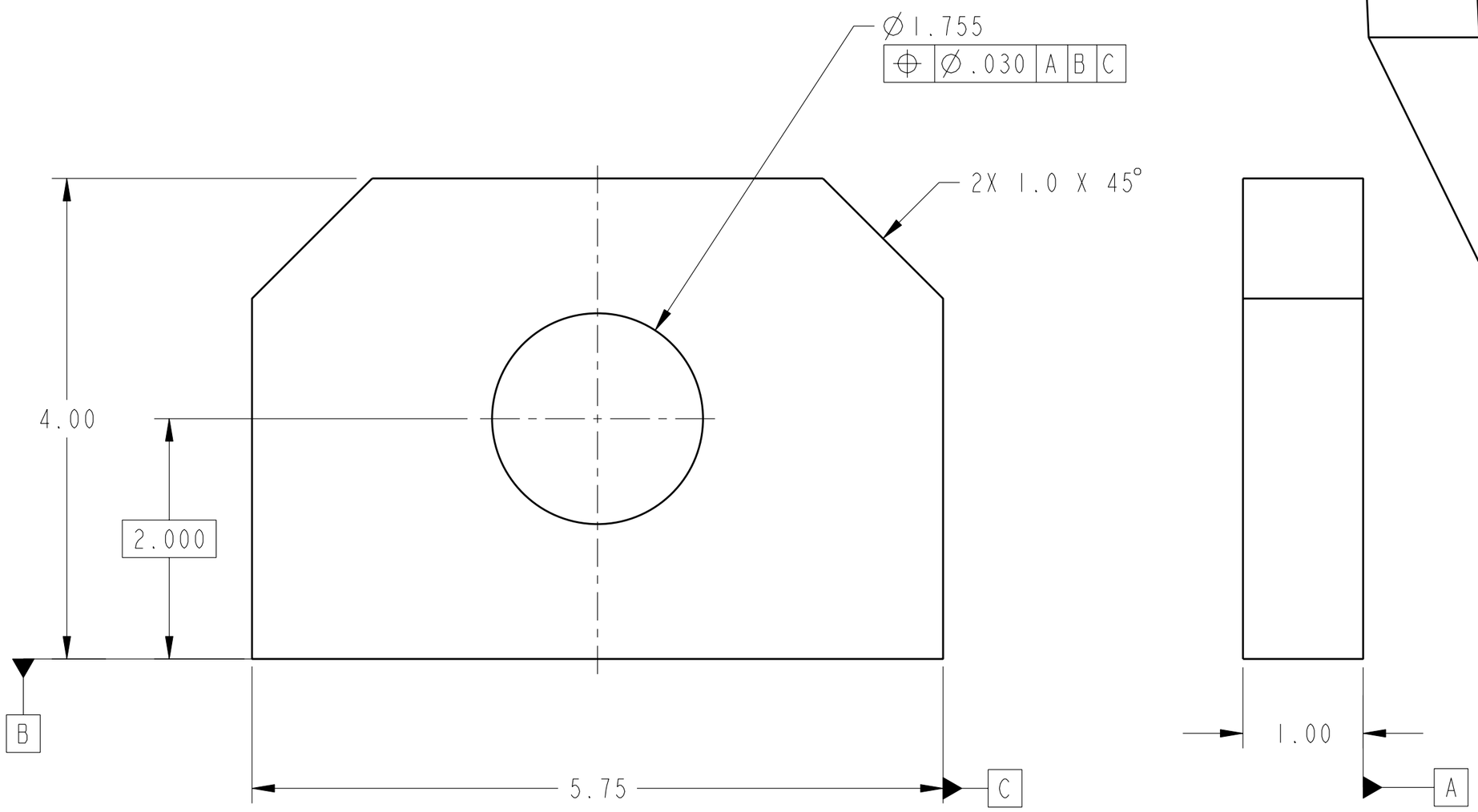

CHG	ZONE	DESCRIPTION	APP/DATE

REVISIONS

PRIOR TO USE VERIFY THE INTENDED PURPOSE IN PDM ("FOR" ATTRIBUTE)

UNLESS OTHERWISE SPECIFIED DIMENSIONS ARE IN INCHES		CONTRACT	NNC06BA07B
		CONTRACTOR	ASRC AEROSPACE
TOLERANCE ON		TASK ORDER	G467
.X	± 0.03	DRAFTER	ASRC/PN
.XX	± 0.01	ENGINEER	ASRC/PN
.XXX	± 0.005	DESIGNER	ASRC/PN
FRACTION	± -	DIMENSIONING AND TOLERANCING PER ASME Y14.5M-1994	
ANGULAR	± 0.50°		
BREAK EDGES	.010-.020		

PDM REL LEVEL: PDM REVISION:

PDM DATABASE:

MODEL NAME: G46710MRA105_LIFT_LUG

CHECK FOR ANY OUTSTANDING ECO'S PRIOR TO USE

NATIONAL AERONAUTICS AND SPACE ADMINISTRATION
JOHN H. GLENN RESEARCH CENTER
LEWIS FIELD
CLEVELAND, OHIO

VARIOUS

VARIOUS

A105 LIFT LUG

SIZE	DRAWING NUMBER	REV	BLDG	AREA
C	G46710MRA105	-	125	-
			UNITS: INCH	

SCALE:	INITIAL REL DATE	SHEET	DISCIPLINE
1/1	12/2/2010	1 OF 1	MECHANICAL

PRO/E VERSION: Wildfire 3.0

SIZE C DRAWING NUMBER G46710MRA105 REV -

NAME:PANEWMAN OBJECT:G46710MRA105_LIFT_LUG DATE:14-Apr-11 15:45:20