1. MATERIAL: 304L STAINLESS STEEL PER ASTM A240.
2. ALL WELDS TO BE FULL PENETRATION.
3. WELDER TO BE QUALIFIED AND CERTIFIED PER AWS D17.1, SECTION 4.
4. WELD PER AWS D17.1, CLASS B. INSPECT PER AWS D17.1, SECTION 6. CONTROL AND VERIFY WELD ROD/FILLER MATERIAL PER NASA STD-5006. CERTIFICATE OF CONFORMANCE REQUIRED FOR WELD ROD/FILLER MATERIAL.
5. THERMAL STRESS RELIEVE AFTER WELDING AND BEFORE FINAL MACHINING.
6. SMOOTH TRANSITIONS BETWEEN DATUM POINTS.

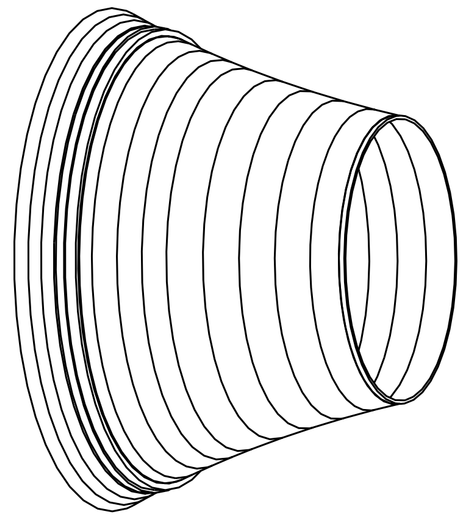

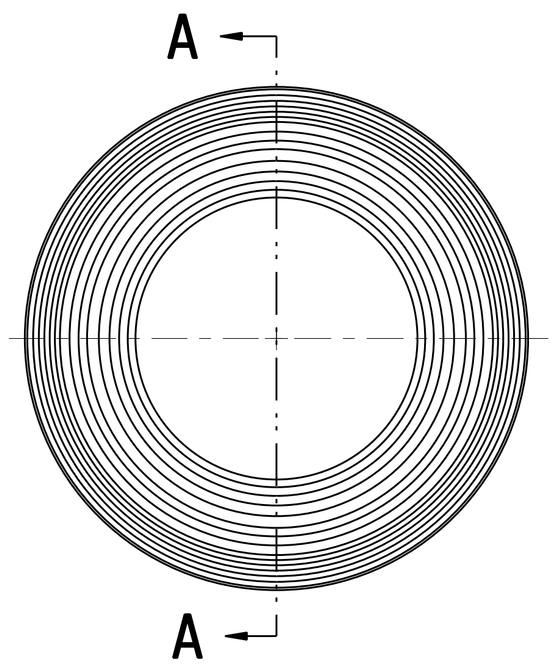

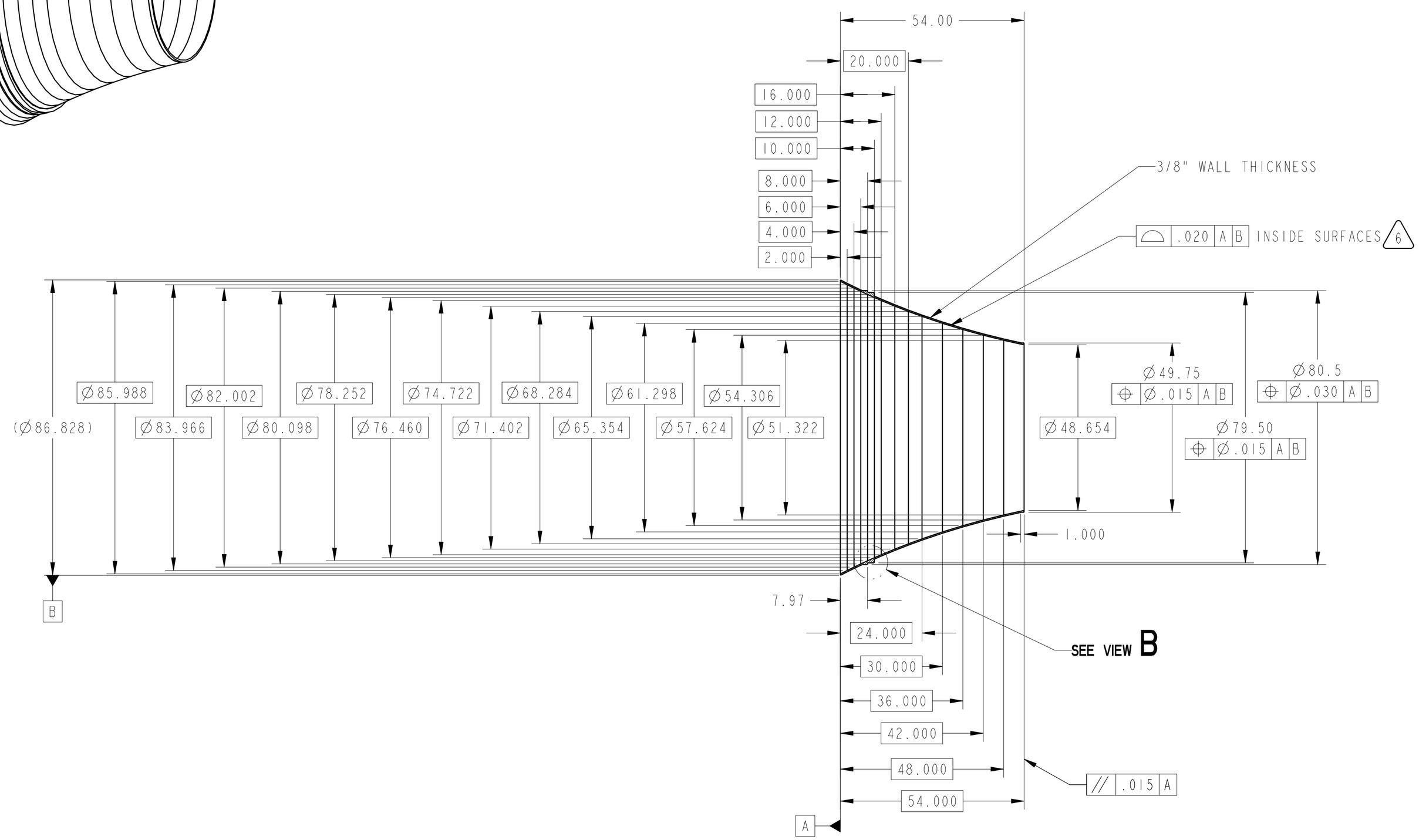

SECTION A-A

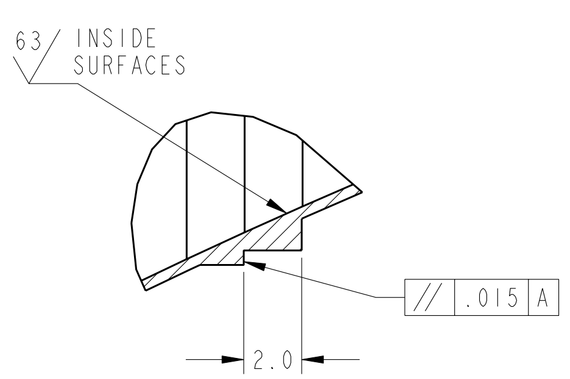

DETAIL B
SCALE 1/4

CHG	ZONE	DESCRIPTION	APP/DATE

REVISIONS

PRIOR TO USE VERIFY THE INTENDED PURPOSE IN PDM ("FOR" ATTRIBUTE)

UNLESS OTHERWISE SPECIFIED DIMENSIONS ARE IN INCHES

CONTRACT NNC06BA07B
CONTRACTOR ASRC AEROSPACE

TOLERANCE ON		TASK ORDER	G467
.X	± 0.03	DRAFTER	ASRC/PN
.XX	± 0.01	ENGINEER	ASRC/PN
.XXX	± 0.005	DESIGNER	ASRC/PN
FRACTION	± .030		
ANGULAR	± 0.50°		
BREAK EDGES	.010-.020		

DIMENSIONING AND TOLERANCING PER ASME Y14.5M-1994

NATIONAL AERONAUTICS AND SPACE ADMINISTRATION
JOHN H. GLENN RESEARCH CENTER
LEWIS FIELD
CLEVELAND, OHIO

LARGE TRANSITION DUCT
WELDMENT ASSEMBLY
G46710MRA100

A101 LARGE TRANSITION DUCT

PDM REL LEVEL: PDM REVISION:
PDM DATABASE:
MODEL NAME: G46710MRA101_LRG_TRANS_DUCT
CHECK FOR ANY OUTSTANDING ECO'S PRIOR TO USE

SIZE	DRAWING NUMBER	REV	BLDG	AREA
D	G46710MRA101	-	125	-
			UNITS: INCH	
SCALE: 1/20	INITIAL REL DATE 12/4/2010	SHEET 1 OF 1	DISCIPLINE MECHANICAL	

PRO/E VERSION: Wildfire 3.0

SIZE D DRAWING NUMBER G46710MRA101 REV -

NAME:PANEWMAN OBJECT:G46710MRA101_LRG_TRANS_DUCT DATE:14-Apr-11 12:48:25