DRAWING LIST

DRAWING NUMBER: DRAWING CODE	DRAWING NUMBER: BALLOON NO	DESCRIPTION	QTY/ ASSY
G467I0MRA100		LARGE TRANSITION DUCT WELDMENT ASSEMBLY	1
G467I0MRA101		LARGE TRANSITION DUCT	1
G467I0MRA102		LARGE TRANSITION DUCT INSTALLATION FLANGE	1
G467I0MRA103		LARGE TRANSITION DUCT MATING FLANGE	1
G467I0MRA104		BELLMOUTH LIP	1
G467I0MRA105		LIFT LUG	1

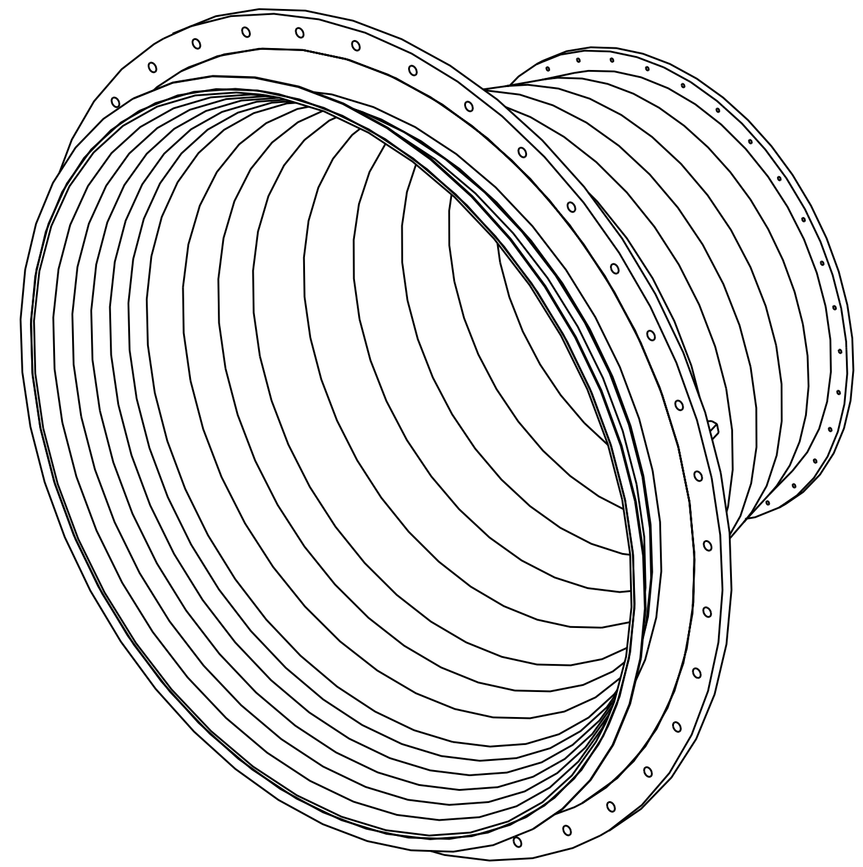

SCALE 2/25

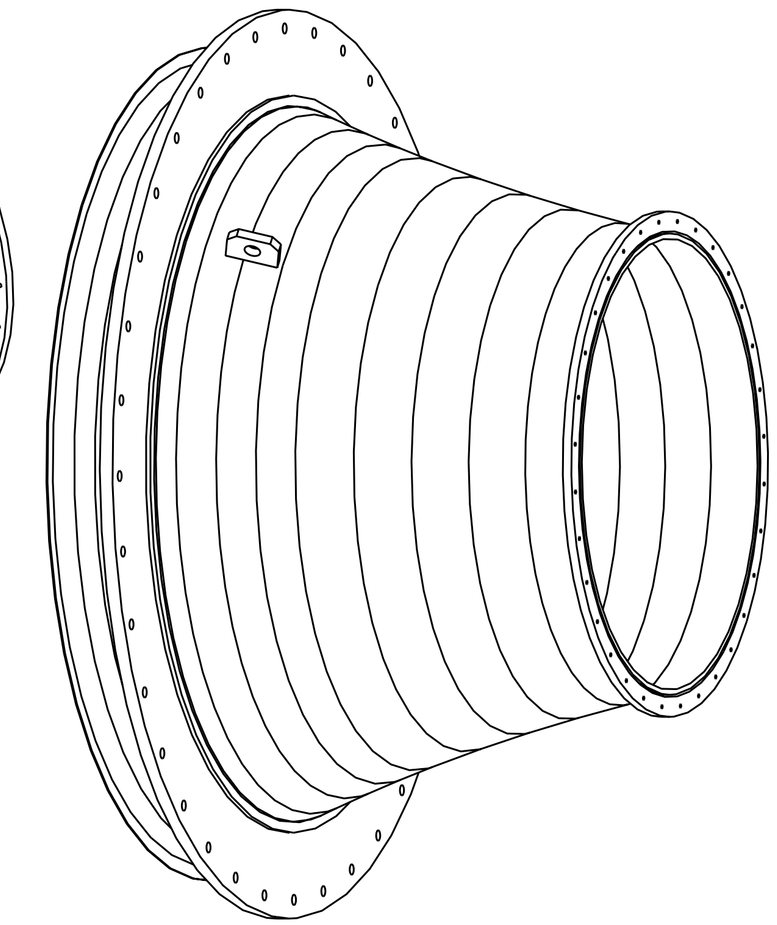

SCALE 2/25

1. ALL WELDS TO BE FULL PENETRATION.
2. WELDER TO BE QUALIFIED AND CERTIFIED PER AWS D17.1, SECTION 4.
3. WELD PER AWS D17.1, CLASS B. INSPECT PER AWS D17.1, SECTION 6. CONTROL AND VERIFY WELD ROD/FILLER MATERIAL PER NASA STD-5006. CERTIFICATE OF CONFORMANCE REQUIRED FOR WELD ROD/FILLER MATERIAL.
4. THERMAL STRESS RELIEVE AFTER WELDING AND BEFORE FINAL MACHINING.
5. VERIFY CHAMFERED SIDE OF FLANGE FACES OUTWARD BEFORE WELDING.
6. MACHINE FLANGE FACE AND HOLE PATTERN ON ITEM A102 PER DRAWING G467I0MRA102 AFTER STRESS RELIEF. MACHINE HOLE PATTERN ON ITEM A103 PER DRAWING G467I0MRA103 AFTER STRESS RELIEF. LIFT LUG (ITEM A105) AND FLANGE HOLES TO BE ALIGNED WITH VERTICAL CENTERLINE WITHIN .020".

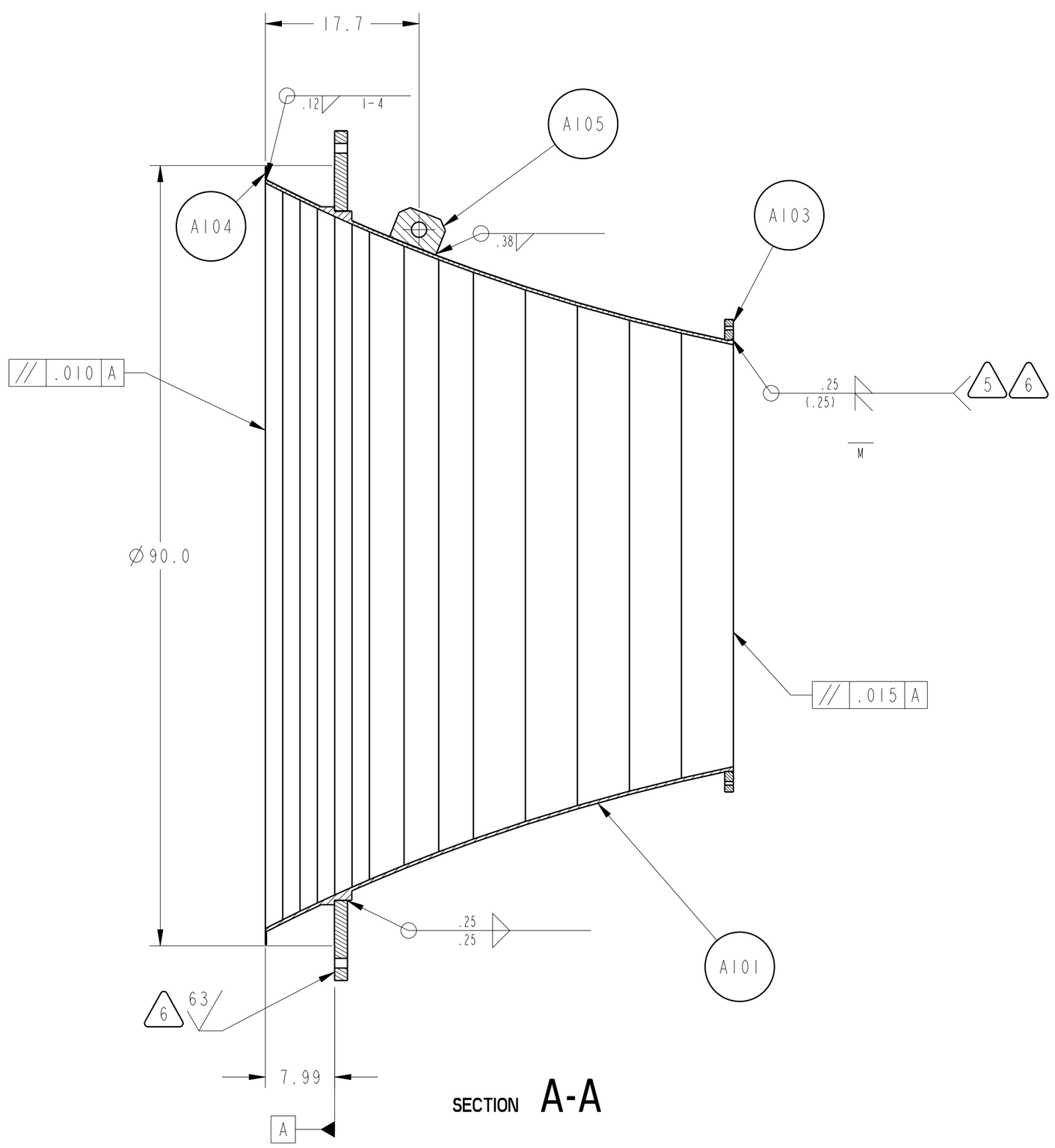

SECTION A-A

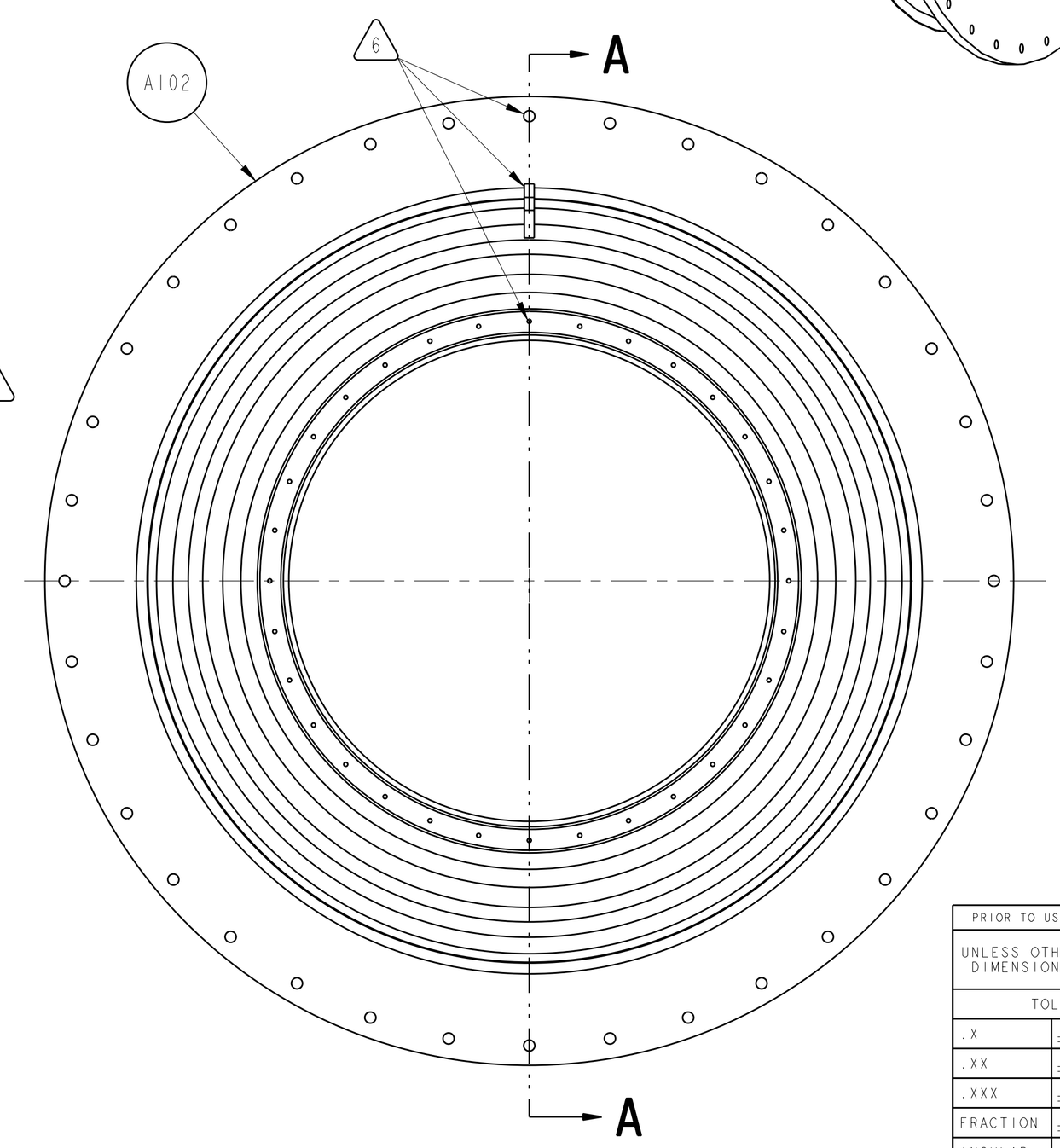

PRIOR TO USE VERIFY THE INTENDED PURPOSE IN PDM ("FOR" ATTRIBUTE)			
UNLESS OTHERWISE SPECIFIED DIMENSIONS ARE IN INCHES		CONTRACT	NNC06BA07B
		CONTRACTOR	ASRC AEROSPACE
TOLERANCE ON		TASK ORDER	G467
.X	± 0.03	DRAFTER	ASRC/PN
.XX	± 0.01	ENGINEER	ASRC/PN
.XXX	± 0.005	DESIGNER	ASRC/PN
FRACTION	± -	DIMENSIONING AND TOLERANCING PER ASME Y14.5M-1994	
ANGULAR	± 0.50°		
BREAK EDGES	.010-.020		

PDM REL LEVEL: PDM REVISION:

PDM DATABASE:

MODEL NAME: G467I0MRA100_LRG_TRANS_DUCT_ASM

CHECK FOR ANY OUTSTANDING ECO'S PRIOR TO USE

CHG	ZONE	DESCRIPTION	APP/DATE

REVISIONS

NATIONAL AERONAUTICS AND SPACE ADMINISTRATION
JOHN H. GLENN RESEARCH CENTER
LEWIS FIELD
CLEVELAND, OHIO

LARGE/SMALL TRANSITION DUCT MATCH ASSEMBLY

G467I0MRA150

A100 LARGE TRANSITION DUCT WELDMENT ASSEMBLY

SIZE	DRAWING NUMBER	REV	BLDG	AREA
D	G467I0MRA100	-	125	-

UNITS: INCH

SCALE:	INITIAL REL DATE	SHEET	DISCIPLINE
1/10	12/3/2010	1 OF 1	MECHANICAL

PRO/E VERSION: Wildfire 3.0

SIZE D DRAWING NUMBER G467I0MRA100 REV -

NAME:PANEWMAN OBJECT:G467I0MRA100_LRG_TRANS_DUCT_ASM DATE:14-Apr-11 12:34:02