National Aeronautics and Space Administration

DRYDEN FLIGHT RESEARCH CENTER

PROJECT TITLE:

REPAIR FLIGHTLINE ACCESS ROADS & AIRCRAFT RAMPS–DFRC, PHASE 1 OF 2

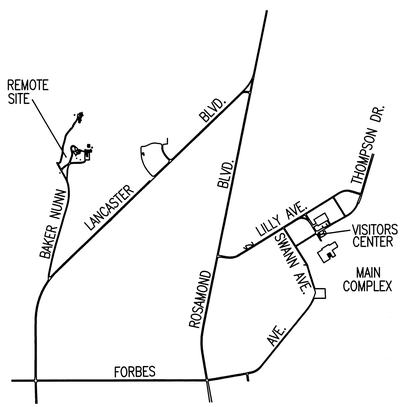

NORTH

AREA PLAN

NOT TO SCALE

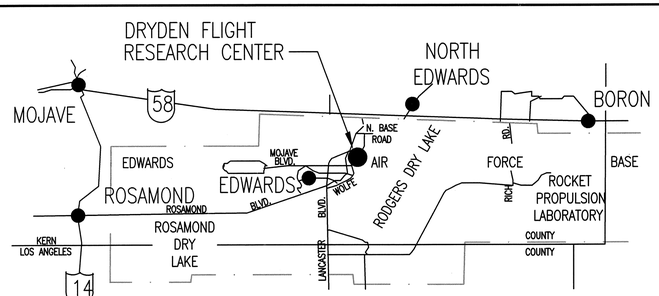

VICINITY MAP

NOT TO SCALE

NORTH

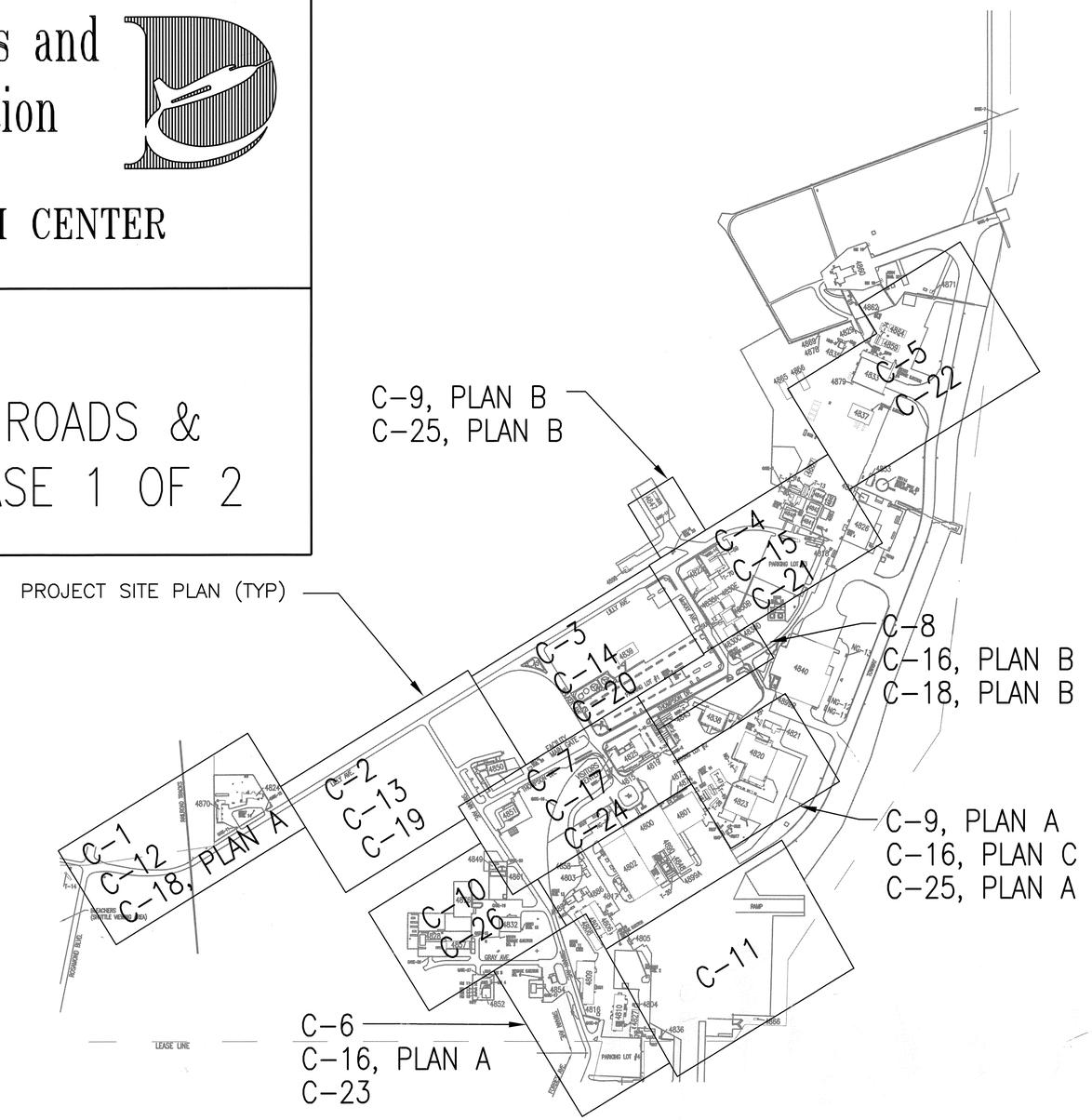

DRYDEN FLIGHT RESEARCH CENTER MAIN COMPLEX SITE PLAN

SCALE: 1"= 400'

400' 200' 0' 400' 800'

100M 50M 0M 100M 200M

NORTH

DRAWING INDEX

SHEET NO.	DWG NO.	SHEET TITLE
1	T-1	TITLE SHEET
2	T-2	LEGEND, ABBREVIATIONS, AND NOTES
3	T-3	SOIL BORING & PHASING MAP
4	T-4	SOIL BORING LOGS
5	T-5	SOIL BORING LOGS
6	T-6	SOIL BORING LOGS
7	T-7	CONC PVMT SPALL REPAIR LEGEND
8	C-1	CIVIL SITE PLAN #1
9	C-2	CIVIL SITE PLAN #2
10	C-3	CIVIL SITE PLAN #3
11	C-4	CIVIL SITE PLAN #4
12	C-5	CIVIL SITE PLAN #5
13	C-6	CIVIL SITE PLAN #6
14	C-7	CIVIL SITE PLAN #7
15	C-8	CIVIL SITE PLAN #8
16	C-9	CIVIL SITE PLAN #9
17	C-10	CIVIL SITE PLAN #10
18	C-11	CIVIL SITE PLAN #11
19	C-12	PAVEMENT REPAIR SITE PLAN #1
20	C-13	PAVEMENT REPAIR SITE PLAN #2
21	C-14	PAVEMENT REPAIR SITE PLAN #3
22	C-15	PAVEMENT REPAIR SITE PLAN #4
23	C-16	PAVEMENT REPAIR SITE PLAN #5
24	C-17	PAVEMENT REPAIR SITE PLAN #6
25	C-18	STRIPING SITE PLAN #1
26	C-19	STRIPING SITE PLAN #2
27	C-20	STRIPING SITE PLAN #3
28	C-21	STRIPING SITE PLAN #4
29	C-22	STRIPING SITE PLAN #5
30	C-23	STRIPING SITE PLAN #6
31	C-24	STRIPING SITE PLAN #7
32	C-25	STRIPING SITE PLAN #8
33	C-26	STRIPING SITE PLAN #9
34	C-27	ENLARGED SITE PLANS
35	C-28	ENLARGED SITE PLANS
36	C-29	DETAILS
37	C-30	DETAILS
38	C-31	DETAILS
39	C-32	DETAILS
40	C-33	DETAILS
41	C-34	DETAILS
42	C-35	DETAILS
43	C-36	DETAILS

REGISTERED PROFESSIONAL ENGINEER
JONATHAN L. BERTCH
NO. 60229
EXP. 6/30/12
CIVIL
STATE OF CALIFORNIA

JBY #0622-10

JB YOUNG & ASSOCIATES
CONSULTANT ENGINEERS
11440 RIVERSIDE DRIVE, SUITE M
LAKESIDE, CA 92040

DATE	SYM	REVISION	BY	A'PD
3/4/11	1	STRIPING AND NOTE REVISIONS (GOV'T REVISIONS)		

NATIONAL AERONAUTICS AND SPACE ADMINISTRATION
DRYDEN FLIGHT RESEARCH CENTER
EDWARDS, CA

DRAWING TITLE
TITLE SHEET

PROJECT TITLE
REPAIR FLIGHTLINE ACCESS ROADS & AIRCRAFT RAMPS–DFRC, PHASE 1 OF 2
100% FINAL DESIGN

APPROVALS	DATE
Chief, Facilities Engineering & Asset Mgmt. Office	3-7-11
Project Manager	11-4-11
Facility Manager	1/5/11
Project Requestor/Customer	1/4/11
Safety, Health & Environmental	1/6/11
Office of Protective Services	1/4/11
Office of the CIO	1/5/11

DATE STRTD	7-29-09	DATE PRNTD	12-7-10
DRAWN BY	JFB		EDM-1706
SCALE	GRAPHIC	TRADE SH. No.	T-1
FILE NAME		SHEET No.	1 of 43

EXISTING CONDITIONS LEGEND

Symbol	Description
△	HORIZONTAL/VERTICAL CONTROL
oLP	LIGHT POLE
oPP	POWER POLE
oTS	TRAFFIC SIGNAL
┬S, oS	SIGN
O SP	STAND PIPE
O MH	MANHOLE
O SMH	SEWER MANHOLE
□WH	WATER HANDHOLE
oV	VALVE WELL
⋈ PIV	POST INDICATOR VALVE
FH	FIRE HYDRANT
□DI	DRAIN INLET
□CB	CATCH BASIN
□TB	TELEPHONE BOOTH
oFP	FLAG POLE
	TREE
x 1902.4	SPOT GRADE
IE 1992.3	INVERT ELEVATION
▭ PRV	PRESSURE REDUCING VALVE ASSY
▭ BPA	BACKFLOW PREVENTION ASSEMBLY
	PAINTED CROSSWALK
	PAINTED STOP LINE
	CANOPY/PATIO
1732	STRUCTURE OR BUILDING AND NUMBER
	FENCE
WALL	MASONRY WALL
	RETAINING WALL
C&G	CURB/GUTTER
ASPH.	ASPHALT SURFACE
DIRT	DIRT SURFACE
CONC.	CONCRETE SURFACE
	GUARDRAIL
	TREE LINE
1750	INDEX CONTOUR (5' INTERVALS)
	INTERMEDIATE CONTOUR (1' INTERVALS)
	APPROXIMATE CONTOUR
HDWL	HEADWALL
E	ELECTRICAL LINE-UNDERGROUND
E O/H	ELECTRICAL LINE-OVERHEAD
FUEL	FUEL LINE
T	TELECOMMUNICATIONS
SS	SANITARY SEWER LINE
SFM	SANITARY SEWER FORCEMAIN LINE
W	POTABLE WATER LINE
F	NON-POTABLE WATER LINE USED EXCLUSIVELY FOR FIRE SUPPRESSION SYSTEMS AND FIRE HYDRANTS.

ABBREVIATIONS

A	ANGLE
AB	ABANDONED
ACP	ASBESTOS CEMENT PIPE
AC	ASPHALTIC CONCRETE
ARV	AIR RELEASE VACUUM ASSY
ASPH	ASPHALT
ASSY	ASSEMBLY
A/G	ABOVE GROUND
AVE.	AVENUE
B	BELL
BC	BEGIN CURVE
BFP	BACKFLOW PREVENTER
BLDG	BUILDING
B/G	BELOW GROUND
BHP	BRAKE HORSEPOWER
BOT	BOTTOM
BOV	BLOW-OFF VALVE ASSY
CICB	CURB INLET CATCH BASIN
CI	CAST IRON
CL	CLASS, CENTER LINE
CLR	CLEAR
CO	CLEANOUT
CPLG	COUPLING
CONT	CONTINUOUS
CONC	CONCRETE
CONN	CONNECT, CONNECTION
C/G	CURB/GUTTER
℄	CENTER LINE
DBL	DOUBLE
DEMO	DEMOLITION
DET	DETAIL
DIA, ø	DIAMETER
DI	DUCTILE IRON
D.I.P.	DUCTILE IRON PIPE
DR	DRIVE
DWG.	DRAWING
E	EAST, EASTINGS
EQ	EQUAL
EA	EACH
E	ELECTRICAL
EC	END CURVE
EIC	ENGINEER IN CHARGE
EL	ELEVATION
EMH	ELECTRICAL MANHOLE
ETC	ETCETERA
EW	EACH WAY
EXP	EXPANSION
EXST	EXISTING
FH	FIRE HYDRANT
FLG	FLANGE
FIN.	FINISH
FL	FLOW LINE
FM	FACTORY MUTUAL
FO	FIBER OPTIC
FS	FAR SIDE
FT	FEET
GAL	GALLON
GALV	GALVANIZED
GP	GUARD POST
GR	GUARD RAIL
GIS	GEOGRAPHICAL INFORMATION SYSTEM
GPM	GALLONS PER MINUTE
GPS	GEOGRAPHICAL POSITIONING SYSTEM
GR	GRADE
GUT.	GUTTER
GV	GATE VALVE
H	HIGH, HEIGHT
HAZ	HAZARDOUS
HH	HANDHOLE
HDWL	HEADWALL
HORIZ	HORIZONTAL
HP	HIGH PRESSURE
HTHW	HIGH TEMPERATURE HOT WATER
HWY	HIGHWAY
I.D.	INTERIOR DIMENSION
IE	INVERT ELEVATION
IRR	IRRIGATION
L	ARC LENGTH, LENGTH
MAG	MAGNETIC
MAX	MAXIMUM
MIN	MINIMUM
MH	MANHOLE
MFR	MANUFACTURER
N	NORTH, NORTHINGS
NAD	NORTH AMERICAN DATUM
NAVD	NORTH AMERICAN VERTICAL DATUM
NAVFAC	NAVAL FACILITIES
N.I.C.	NOT IN CONTRACT
N.A.	NOT APPLICABLE
NF	NOT FOUND
NS	NEAR SIDE
NO.,#	NUMBER
O/C	ON CENTER
OD	OUTSIDE DIAMETER
OH, O/H	OVER HEAD
OPNG	OPENING
OS&Y, OSY	OUTSIDE STEM & YOKE
PCC	PORTLAND CEMENT CONCRETE
PL	PLATE
PE	PLAIN END
PE	POLYETHYLENE
PIV	POST INDICATOR VALVE
POC	POINT OF CONNECTION
P	POLE
PRV	PRESSURE REDUCING VALVE
PSF	POUNDS PER SQUARE FOOT
PSI	POUNDS PER SQUARE INCH
PT	POINT
PWO	PUBLIC WORKS OFFICE
PP	POWER POLE
PVC	POLYVINYL CHLORIDE
PVMT	PAVEMENT
R	RADIUS
RD.	ROAD
RED.	REDUCER
REF	REFERENCE
REINF	REINFORCED
REQD	REQUIRED
RJ	RESTRAINED JOINT
RPBP	REDUCED PRESSURE BACKFLOW PREVENTER
S/C	CONC. LINED/COATED STEEL PIPE
SS	SANITARY SEWER
SCH	SCHEDULE
S	SIGN, SLOPE
SFM	SEWER FORCE MAIN
SIM	SIMILAR
SMH	SEWER MANHOLE
SQ	SQUARE
SST	STAINLESS STEEL
ST.	STREET
STA	STATION
STL	STEEL
SP	STANDPIPE
TAP.	TAPPING
TB	TOP OF BERM
T&B	TOP AND BOTTOM
TEL.	TELEPHONE
TMH	TELEPHONE MANHOLE
TP	TOP OF PAVEMENT
TYP	TYPICAL
U/G	UNDERGROUND
UL	UNDERWRITERS LABORATORIES
UNK	UNKNOWN
U.O.N.	UNLESS OTHERWISE NOTED
UTIL	UTILITY
V	VALVE
VCP	VITRIFIED CLAY PIPE
VERT	VERTICAL
VLT	VAULT
W	WATER, WIDE, WIDTH
WH	WATER HANDHOLE
WLS	WELDED STEEL
W/	WITH
±	PLUS OR MINUS
△	DELTA

GENERAL NOTES

1. THE CONTRACTOR SHALL PROVIDE ALL LABOR AND MATERIALS TO ASSURE A COMPLETE AND PROPER INSTALLATION OF THIS PROJECT.

2. SAWCUT, REMOVE, DISPOSE OF AND REPLACE ASPHALT PAVEMENT AND/OR CONCRETE PAVEMENT TO MATCH EXISTING WHERE REQUIRED.

3. EXISTING SIGNS REMOVED DURING CONSTRUCTION SHALL BE REPLACED IMMEDIATELY AFTER TRENCH HAS BEEN BACKFILLED AND COMPACTED. USE TEMPORARY PORTABLE SIGNS WHERE REQUIRED.

4. AS-BUILT UTILITIES SHOWN INCLUDING MAINS AND ALL LATERALS ASSUMED TO BE LIVE. EXACT LOCATIONS UNVERIFIED.

5. ALL CONSTRUCTION IS NEW UNLESS OTHERWISE NOTED.

6. ALL DIMENSIONS AND CONDITIONS SHALL BE VERIFIED IN THE FIELD BY THE CONTRACTOR.

7. THE CONTRACTOR SHALL EXERCISE EXTREME CAUTION NOT TO DAMAGE ANY EXISTING STRUCTURE, EQUIPMENT, OR UTILITIES. ANY DAMAGE SHALL BE REPAIRED AT THE CONTRACTORS EXPENSE.

8. ALL RESULTANT DEBRIS SHALL BE DISPOSED OF OFF BASE BY THE CONTRACTOR.

9. CONTRACTOR SHALL OBTAIN AIR PERMIT REGISTRATION FOR ALL PORTABLE EQUIPMENT THAT DISCHARGE EMISSIONS (AIR COMPRESSORS, GENERATORS, EQUIPMENT WITH AN INTERNAL COMBUSTION ENGINE OVER 50 BHP, ETC...) FROM THE KERN COUNTY AIR POLLUTION CONTROL DISTRICT. A COPY OF THIS PERMIT SHALL BE SUBMITTED TO THE CODE S.H. OFFICE.

10. THE CONTRACTOR SHALL INSTALL BITUMINOUS PAINT BINDER BETWEEN NEW ASPHALT PAVEMENT AND EXISTING CONCRETE & ASPHALT PAVEMENT.

11. LEAD PAINT HAS BEEN DETERMINED TO BE PRESENT IN TAXIWAY/TOW-WAY STRIPING; IF THEY WILL BE DISTURBED DURING CONSTRUCTION, PROPER SAFETY, HEALTH, AND ENVIRONMENTAL PROTOCOLS MUST BE DEVELOPED AND FOLLOWED. LEAD-BASED PAINT SHALL BE REMOVED BY A LICENSED CONTRACTOR PRIOR TO CONSTRUCTION ACTIVITIES. ALL WORK MUST BE CONDUCTED IN A MANNER THAT DOES NOT EXPOSE WORKERS TO LEAD AS OUTLINED IN 40 CFR PARTS 61 AND 763, 29 CFR PARTS 1910 AND 1926, AND 8CCR SECTION 5216.

11. DO NOT SLURRY SEAL OVER CONCRETE PAVEMENT, CONCRETE UTILITY SCARS, EQUIPMENT PADS, DOOR PADS, ETC...

12. CONTRACTOR SHALL PROVIDE TEMPORARY SIGNAGE AS REQUIRED TO ESTABLISH DETOURS AND RE-ROUTE TRAFFIC AS REQUIRED. COORDINATE DETOUR ROUTES, TRAFFIC PATTERNS, AND SIGNAGE WITH PROJECT MANAGER AND PROTECTIVE SERVICES. CONTRACTOR SHALL PROVIDE AND INSTALL A MINIMUM OF 20 TEMPORARY SIGNS PER CONSTRUCTION PHASE. CONSTRUCTION PHASES ARE SHOWN ON DRAWING T-3. PHASING PLAN AND TEMPORARY SIGNAGE SHALL BE SUBMITTED FOR APPROVAL BY DRYDEN PROJECT MANAGER BEFORE THE COMMENCEMENT OF ANY CONSTRUCTION OR DEMOLITION WORK.

13. CONTRACTOR SHALL FOLLOW ALL SOILS REPORT AND SUPPLEMENTAL LETTER RECOMMENDATIONS.

HORIZONTAL AND VERTICAL CONTROL

MONUMENT #1:

CONCRETE MONUMENT AT CORNER OF WALKER AVE AND THOMPSON DR
NORTHERN 528,183.086'
EASTERN 2,033,650.182'
ELEVATION 2,292.15'

MONUMENT #2:

CONCRETE MONUMENT NEAR CORNER OF MCKAY AVE AND THOMPSON DR
NORTHERN 528,601.559'
EASTERN 2,034,416.916'
ELEVATION 2,280.77'

MONUMENT #3:

CONCRETE MONUMENT AT CORNER OF WALKER AVE AND LILLY AVE
NORTHERN 528,717.766'
EASTERN 2,033,320.393'
ELEVATION 2,305.56'

OPTION NOTES

OPTION #1: AREA A SLURRY SEAL

INCLUDES ALL CLOUDED WORK SHOWN ON DRAWINGS C-4, C-5, C-15, C-21, AND C-22. WORK INCLUDES PAVEMENT REPAIRS, SLURRY SEAL, AND PAVEMENT STRIPING ONLY. WORK SHOWN ON ENLARGED PLANS (GUARD POSTS, CHAINS, AND GUARD RAILS) SHALL BE INCLUDED IN THE BASE BID.

OPTION #2 TAXIWAY JOINT SEAL AND SPALL REPAIR

INCLUDES ALL WORK SHOWN ON DRAWINGS C-11 AND ALL ASSOCIATED DETAILS. THE WORK INCLUDES CONCRETE PAVEMENT REPAIR, PAVEMENT JOINT REPLACEMENT WORK, CONCRETE SPALL REPAIR, CONCRETE PAVEMENT CRACK REPAIR, AND NEW HANDHOLES.

OPTION #3 – PEGASUS ASSEMBLY BUILDING 4847 PARKING LOT SLURRY SEAL.

INCLUDES ALL CLOUDED WORK SHOWN ON DRAWINGS C-9, AND C-25. WORK INCLUDES PAVEMENT REPAIR, PAVEMENT REPAIRS, SLURRY SEAL, AND PAVEMENT STRIPING ONLY.

OPTION #4 – GRAY AVENUE AND WAREHOUSE NO. 6 & 7 PARKING LOTS SLURRY SEAL.

INCLUDES ALL CLOUDED WORK SHOWN ON DRAWINGS C-6 (REPAIR SITE PLAN 6A), C-10, C-23 (REPAIR SITE PLAN 6A), AND C-26. WORK INCLUDES PAVEMENT REPAIRS, SLURRY SEAL, AND PAVEMENT STRIPING ONLY.

OPTION #5 – BUILDING 4810 PARKING LOT SLURRY SEAL.

INCLUDES ALL CLOUDED WORK SHOWN ON DRAWINGS C-6 (REPAIR SITE PLAN 6B) AND C-23 (REPAIR SITE PLAN 6B). WORK INCLUDES PAVEMENT REPAIRS, SLURRY SEAL, AND PAVEMENT STRIPING ONLY.

OPTION #6 – BUILDING 4825 PARKING LOT PAVEMENT REPAIR.

INCLUDES ALL CLOUDED WORK SHOWN ON DRAWINGS C-7, C-17, AND C-24. WORK INCLUDES PAVEMENT REPAIRS AND PAVEMENT STRIPING.

REGISTERED PROFESSIONAL ENGINEER
JONATHAN F. BERLINCHI
NO. 60229
EXP. 6/30/12
CIVIL
STATE OF CALIFORNIA

JBY #0622-10

JB YOUNG & ASSOCIATES
CONSULTANT ENGINEERS
11440 RIVERSIDE DRIVE, SUITE M
LAKESIDE, CA 92040

DATE	SYM	REVISION	BY	A'PD

NATIONAL AERONAUTICS AND SPACE ADMINISTRATION
DRYDEN FLIGHT RESEARCH CENTER
EDWARDS, CA

DRAWING TITLE
LEGEND, ABBREVIATIONS, AND NOTES

PROJECT TITLE
REPAIR FLIGHTLINE ACCESS ROADS & AIRCRAFT RAMPS-DFRC, PHASE 1 OF 2
100% FINAL DESIGN

APPROVALS	DATE
Chief, Facilities Engineering & Asset Mgmt. Office	3-7-11
Project Manager	1-4-11
Facility Manager	1/5/11
Project Requestor/Customer	1/4/11
Safety, Health & Environmental	1/6/11
Office of Protective Services	1/4/11
Office of the CIO	1/5/11

DATE STRTD	7-29-09	DATE PRNTD	12-7-10
DRAWN BY	JFB		EDM-1706
SCALE	GRAPHIC	TRADE SH. No.	
FILE NAME		T-2	SHEET No. 2 of 43

PHASING NOTES:

PHASE 1: INCLUDES ALL OF LILLY AVENUE; SWANN AVENUE BETWEEN LILLY AND THOMPSON DRIVE; WALKER AVENUE BETWEEN LILLY AND THOMPSON DRIVE; BUS LANE AND NORTH ENTRANCE TO PARKING LOT #1 OFF OF WALKER AVENUE. **NOTE:** THOMPSON AVENUE TO REMAIN FULLY OPERATIONAL FROM SWANN TO PARKING LOT #3 DURING THIS PHASE OF CONSTRUCTION.

PHASE 2: INCLUDES RECONSTRUCT SECTION OF SWANN AVENUE BETWEEN ENTRANCE TO WAREHOUSE 4876 AND 4832 AND GATE 37. **NOTE:** DFRC FUEL STATION TO REMAIN ACCESSIBLE THROUGH WAREHOUSE PARKING LOTS AND GRAY AVENUE.

PHASE 3: INCLUDES THOMPSON AVENUE RESURFACING; RECONSTRUCTION OF SWANN AVENUE AND THOMPSON DRIVE INTERSECTION; RECONSTRUCTION OF THOMPSON DRIVE AND WALKER AVENUE INTERSECTION; THE RECONSTRUCTION OF PARKING AREA/FLIGHTLINE ACCESS AREA NORTH OF HANGER 4802, AND THE SLURRY SEAL OF B4850 PARKING LOT.

PHASE 4: INCLUDES MCKAY AVE, PARKING LOT #1, PORTION OF THOMPSON ROAD, AND BUILDING 4825 DRIVEWAY & PARKING LOT.

PHASE 5: INCLUDES SLURRY SEAL SWANN AVENUE BETWEEN THOMPSON DRIVE AND PHASE 2 SWANN AVENUE RECONSTRUCTION WORK; SLURRY SEAL PARKING LOTS AT WAREHOUSE 4876 AND 4832. **NOTE:** WORK SHALL BE PERFORMED OFF HOURS (NIGHTS AND / OR WEEKENDS) SUCH THAT WAREHOUSES ARE ACCESSIBLE DURING NORMAL BUSINESS HOURS.

PHASE 6: INCLUDES SLURRY SEAL GRAY AVENUE; FUEL STATION; SWANN AVENUE SOUTH OF PHASE 2 RECONSTRUCTION WORK; AND PARKING LOT #4. **NOTE:** WORK STALL BE PERFORMED OFF HOURS (NIGHTS AND / OR WEEKENDS) SUCH THAT FUEL STATION IS ACCESSIBLE DURING NORMAL BUSINESS HOURS.

PHASE 7: INCLUDES TAXI-WAY JOINT SEAL AND SPALL REPAIRS; ASPHALT AND CONCRETE WORK AT B4823 AND B4820.

PHASE 8: INCLUDES PARKING LOT #3 RECONSTRUCTION; AND ROADS IN AREA-A SLURRY SEAL. INCLUDE PARKING LOT/ACCESS ROAD SERVING PEGASUS BUILDING 4847 UNDER THIS PHASE.

NOTES FOR ALL PHASES:

A) ONE PHASE SHALL BE COMPLETELY FINISHED BEFORE CONSTRUCTION CAN START ON ANOTHER PHASE.
B) COMPLETION OF A PHASE SHALL INCLUDE ALL WORK, INCLUDING DEMOLITION OF EXISTING PAVEMENT AND CONSTRUCTION OF NEW PAVEMENT.
C) PHASING SHALL PROCEED IN SEQUENTIAL ORDER, UNLESS OTHERWISE DIRECTED BY THE CONTRACTING OFFICER.

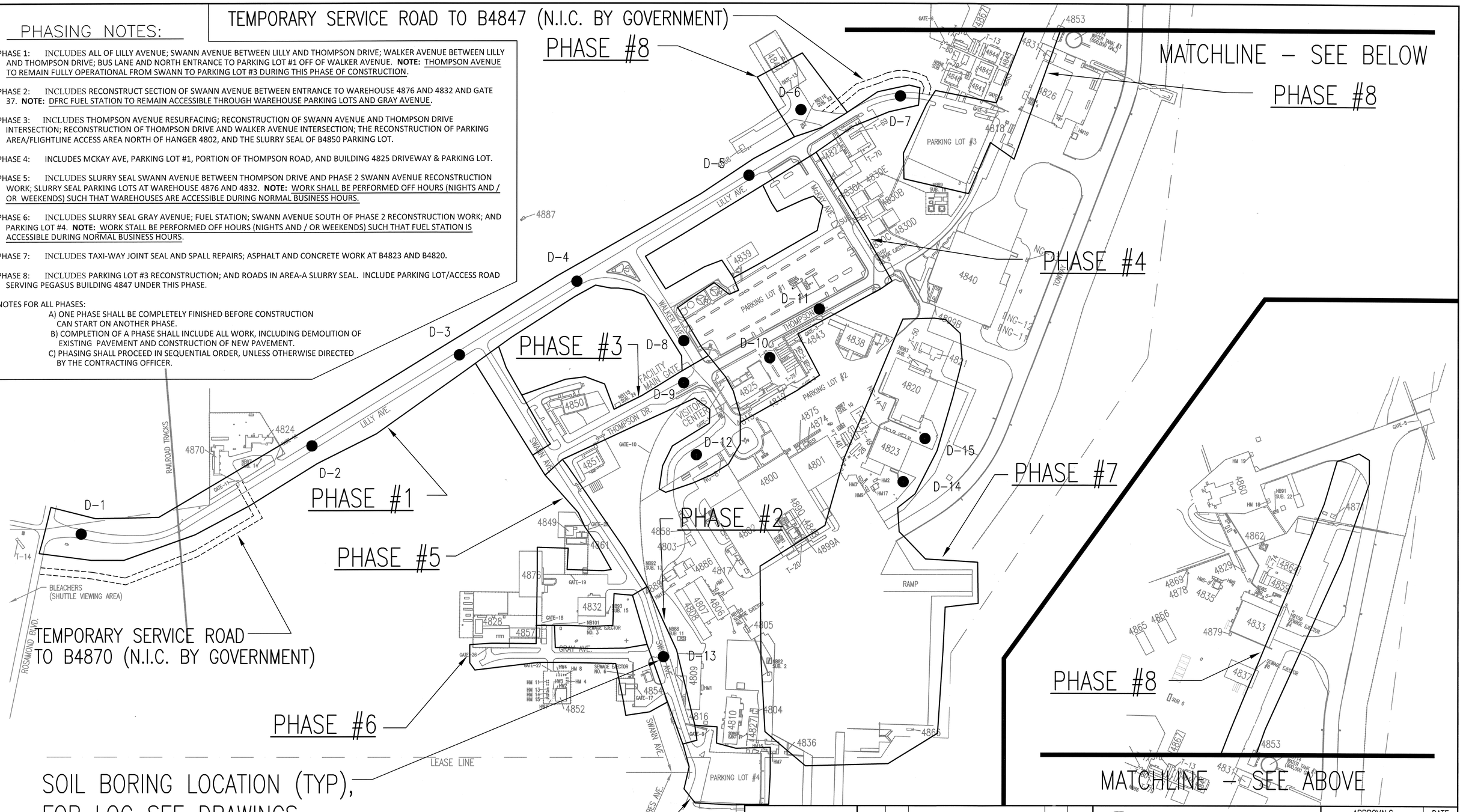

NORTH

SCALE: 1"= 200'

200' 100' 0' 200' 400'

REGISTERED PROFESSIONAL ENGINEER JONATHAN L. BERKSCHE NO. 60229 EXP. 6/30/12 CIVIL STATE OF CALIFORNIA

JBY #0622-10

JB YOUNG & ASSOCIATES
CONSULTANT ENGINEERS
11440 RIVERSIDE DRIVE, SUITE M
LAKESIDE, CA 92040

DATE	SYM	REVISION	BY	A'PD

NATIONAL AERONAUTICS AND SPACE ADMINISTRATION
DRYDEN FLIGHT RESEARCH CENTER
EDWARDS, CA

DRAWING TITLE
SOIL BORING & PHASING MAP

PROJECT TITLE
REPAIR FLIGHTLINE ACCESS ROADS & AIRCRAFT RAMPS-DFRC, PHASE 1 OF 2
100% FINAL DESIGN

APPROVALS	DATE
Chief, Facilities Engineering & Asset Mgmt. Office	3-7-11
Project Manager	1-4-11
Facility Manager	1/5/11
Project Requestor/Customer	1/4/11
Safety, Health & Environmental	1/6/11
Office of Technical Services	1/4/11
Office of the CIO	1/5/11

DATE STRTD	7-29-09	DATE PRNTD	12-7-10
DRAWN BY	JFB		
SCALE	GRAPHIC	TRADE SH. No.	EDM-1706
FILE NAME		T-3	SHEET No. 3 of 43

DRYDEN FLIGHT RESEARCH CENTER
SOIL BORING & PROJECT PHASING SITE PLAN

BORING D1

DATE DRILLED: 12/17/09
EQUIPMENT USED: 8-Inch Diameter Hollow-stem-auger

ELEVATION (ft.)	DEPTH (ft.)	PID READINGS (ppm)	MOISTURE (% of dry wt.)	DRY DENSITY (lbs./cu. ft.)	BLOWS/FOOT	SAMPLE LOC.	
							3" Asphalt Paving - 4" Aggregate Base
						SC	CLAYEY SAND - fine to medium, medium dense, completely weathered, moist, some gravel, light reddish brown
	2.5	ND	5.7	116	27		39% Passing #200 sieve
							GRANITE - highly weathered, coarse grained, very dense, moist, light brown and yellowish brown
	5	ND	10.3	121	59		
	7.5						NOTES: Groundwater not encountered. No caving. Boring backfilled with soil cuttings.
	10						
	12.5						
	15						
	17.5						
	20						

JOB G29013-1 DATE 7/13/2010 F.T. SK BY KSL ENGR. SK REV.

Note: The log of subsurface conditions shown hereon applies only at the specific boring location and at the date indicated. It is not warranted to be representative of subsurface conditions at other locations and times.

LOG OF BORING

PLATE A-1.1

BORING D2

DATE DRILLED: 12/17/09
EQUIPMENT USED: 8-Inch Diameter Hollow-stem-auger

ELEVATION (ft.)	DEPTH (ft.)	PID READINGS (ppm)	MOISTURE (% of dry wt.)	DRY DENSITY (lbs./cu. ft.)	BLOWS/FOOT	SAMPLE LOC.	
						SM	3-1/2" Asphalt Paving
						SC	SILTY SAND - fine to medium, medium dense to dense, moist, light reddish brown
	2.5	ND	7.2	112	32		SAND, slightly Clayey- fine to coarse, dense, brown
							GRANITE - highly weathered, coarse grained, hard, moist, light brown and grey
	5	ND	5.5	114	100		
	7.5						NOTES: Groundwater not encountered. No caving. Boring backfilled with soil cuttings.
	10						
	12.5						
	15						
	17.5						
	20						

JOB G29013-1 DATE 7/13/2010 F.T. SK BY KSL ENGR. SK REV.

Note: The log of subsurface conditions shown hereon applies only at the specific boring location and at the date indicated. It is not warranted to be representative of subsurface conditions at other locations and times.

LOG OF BORING

PLATE A-1.2

BORING D3

DATE DRILLED: 12/17/09
EQUIPMENT USED: 8-Inch Diameter Hollow-stem-auger

ELEVATION (ft.)	DEPTH (ft.)	PID READINGS (ppm)	MOISTURE (% of dry wt.)	DRY DENSITY (lbs./cu. ft.)	BLOWS/FOOT	SAMPLE LOC.	
						SM	4" Asphalt Paving
							SILTY SAND - fine to medium, dense, moist, some Clay, light reddish brown
	2.5	ND	2.8	121	39		GRANITE - completely to highly weathered, coarse grained, hard, moist, light brown and greenish grey
	5	ND	5.6	115	91		Brown and dark greyish brown
	7.5						NOTES: Groundwater not encountered. No caving. Boring backfilled with soil cuttings.
	10						
	12.5						
	15						
	17.5						
	20						

JOB G29013-1 DATE 7/13/2010 F.T. SK BY KSL ENGR. SK REV.

Note: The log of subsurface conditions shown hereon applies only at the specific boring location and at the date indicated. It is not warranted to be representative of subsurface conditions at other locations and times.

LOG OF BORING

PLATE A-1.3

BORING D4

DATE DRILLED: 12/17/09
EQUIPMENT USED: 8-Inch Diameter Hollow-stem-auger

ELEVATION (ft.)	DEPTH (ft.)	PID READINGS (ppm)	MOISTURE (% of dry wt.)	DRY DENSITY (lbs./cu. ft.)	BLOWS/FOOT	SAMPLE LOC.	
						SC	3-1/2" Asphalt Paving
							CLAYEY SAND - fine, dense, moist, light yellowish brown
							24% Passing #200 sieve
	2.5	ND	11.8	93	47		Porous, traces of caliche
							GRANITE - highly to moderately weathered, coarse grained, very dense to hard, moist, light yellowish brown and white
	5	ND	18.9	--	65		
	7.5						NOTES: Groundwater not encountered. No caving. Boring backfilled with soil cuttings.
	10						
	12.5						
	15						
	17.5						
	20						

JOB G29013-1 DATE 7/13/2010 F.T. SK BY KSL ENGR. SK REV.

Note: The log of subsurface conditions shown hereon applies only at the specific boring location and at the date indicated. It is not warranted to be representative of subsurface conditions at other locations and times.

LOG OF BORING

PLATE A-1.4

BORING D5

DATE DRILLED: 12/16/09
EQUIPMENT USED: 8-Inch Diameter Hollow-stem-auger

ELEVATION (ft.)	DEPTH (ft.)	PID READINGS (ppm)	MOISTURE (% of dry wt.)	DRY DENSITY (lbs./cu. ft.)	BLOWS/FOOT	SAMPLE LOC.	
							1-1/2" Asphalt Paving - 8" Aggregate Base
						CL	SANDY CLAY - fine, medium dense, moist, abundant caliche, brown and yellowish brown
	2.5	ND	14.1	111	29		
						SC	CLAYEY SAND - fine to coarse, dense, moist, light brown and reddish brown
							GRANITE - highly weathered, coarse grained, very dense, moist, light brown
	5	ND	6.6	124	100		
	7.5						NOTES: Groundwater not encountered. No caving. Boring backfilled with soil cuttings.
	10						
	12.5						
	15						
	17.5						
	20						

JOB G29013-1 DATE 7/13/2010 F.T. SK BY KSL ENGR. SK REV.

Note: The log of subsurface conditions shown hereon applies only at the specific boring location and at the date indicated. It is not warranted to be representative of subsurface conditions at other locations and times.

LOG OF BORING

PLATE A-1.5

BORING D6

DATE DRILLED: 12/16/09
EQUIPMENT USED: 8-Inch Diameter Hollow-stem-auger

ELEVATION (ft.)	DEPTH (ft.)	PID READINGS (ppm)	MOISTURE (% of dry wt.)	DRY DENSITY (lbs./cu. ft.)	BLOWS/FOOT	SAMPLE LOC.	
							4-1/2" Asphalt Paving - 6" Aggregate Base
						SC	CLAYEY SAND - fine to medium, medium dense to dense, moist, some gravel, reddish brown
	2.5	ND	4.8	122	30		
							GRANITE - moderately weathered, coarse grained, hard, moist, dark grey and brown
	5	ND	14.2	117	100		
	7.5						NOTES: Groundwater not encountered. No caving. Boring backfilled with soil cuttings.
	10						
	12.5						
	15						
	17.5						
	20						

JOB G29013-1 DATE 7/13/2010 F.T. SK BY KSL ENGR. SK REV.

Note: The log of subsurface conditions shown hereon applies only at the specific boring location and at the date indicated. It is not warranted to be representative of subsurface conditions at other locations and times.

LOG OF BORING

PLATE A-1.6

REGISTERED PROFESSIONAL ENGINEER
JONATHAN E. BERENBACH
NO. 60229
EXP. 6/30/12
CIVIL
STATE OF CALIFORNIA

JBY #0622-10

JB YOUNG & ASSOCIATES
CONSULTANT ENGINEERS
11440 RIVERSIDE DRIVE, SUITE M
LAKESIDE, CA 92040

DATE	SYM	REVISION	BY	A'PD

NATIONAL AERONAUTICS AND SPACE ADMINISTRATION
DRYDEN FLIGHT RESEARCH CENTER
EDWARDS, CA

DRAWING TITLE
SOIL BORING LOGS

PROJECT TITLE
REPAIR FLIGHTLINE ACCESS ROADS & AIRCRAFT RAMPS-DFRC, PHASE 1 OF 2
100% FINAL DESIGN

APPROVALS	DATE
Chief, Facilities Engineering & Asset Mgmt. Office	3-7-11
Project Manager	1-4-11
Facility Manager	1/5/11
Project Requestor/Customer	1/4/11
Safety, Health & Environmental	1/6/11
Office of Property Services	1/4/11
Office of the CIO	1/5/11

DATE STRTD	7-29-09	DATE PRNTD	12-7-10
DRAWN BY	JFB		EDM-1706
SCALE	GRAPHIC	TRADE SH. No. T-4	
FILE NAME		SHEET No. 4 of 43	

BORING D7

DATE DRILLED: 12/16/09
EQUIPMENT USED: 8-Inch Diameter Hollow-stem-auger

ELEVATION (ft.)	DEPTH (ft.)	PID READINGS (ppm)	MOISTURE (% of dry wt.)	DRY DENSITY (lbs./cu. ft.)	BLOWS/FOOT	SAMPLE LOC.	
							SC 1" Asphalt Paving - 6" Aggregate Base CLAYEY SAND - fine to medium, dense, moist, abundant gravel, light brown
	2.5	ND	5.4	119	97		30% Passing #200 sieve GRANITE - moderately weathered, coarse grained, hard, light grey and brown
					100		
	5						NOTES: Groundwater not encountered. No caving. Boring backfilled with soil cuttings.
	7.5						
	10						
	12.5						
	15						
	17.5						
	20						

JOB G29013-1 DATE 7/13/2010 F.T. SK BY KSL ENGR. SK REV.
Note: The log of subsurface conditions shown hereon applies only at the specific boring location and at the date indicated. It is not warranted to be representative of subsurface conditions at other locations and times.

LOG OF BORING

PLATE A-1.7

BORING D8

DATE DRILLED: 12/16/09
EQUIPMENT USED: 8-Inch Diameter Hollow-stem-auger

ELEVATION (ft.)	DEPTH (ft.)	PID READINGS (ppm)	MOISTURE (% of dry wt.)	DRY DENSITY (lbs./cu. ft.)	BLOWS/FOOT	SAMPLE LOC.	
							SM 4" Asphalt Paving FILL - SILTY SAND - fine, dense, dry to moist, light brown
	2.5	ND	19.8	105	79		GRANITE - moderately weathered, medium to coarse grained, very dense to hard, light grey and light brown
		ND	3.2	111	100		Light yellowish brown and light grey
	5						NOTES: Groundwater not encountered. No caving. Boring backfilled with soil cuttings.
	7.5						
	10						
	12.5						
	15						
	17.5						
	20						

JOB G29013-1 DATE 7/13/2010 F.T. SK BY KSL ENGR. SK REV.
Note: The log of subsurface conditions shown hereon applies only at the specific boring location and at the date indicated. It is not warranted to be representative of subsurface conditions at other locations and times.

LOG OF BORING

PLATE A-1.8

BORING D9

DATE DRILLED: 12/16/09
EQUIPMENT USED: 8-Inch Diameter Hollow-stem-auger

ELEVATION (ft.)	DEPTH (ft.)	PID READINGS (ppm)	MOISTURE (% of dry wt.)	DRY DENSITY (lbs./cu. ft.)	BLOWS/FOOT	SAMPLE LOC.	
							SC 2" Asphalt Paving - 4" Aggregate Base CLAYEY SAND - coarse, very dense, moist, light reddish brown
	2.5	ND	10.9	114	75		GRANITE - moderately weathered, coarse grained, very dense to hard, light grey
		ND			100		
	5						NOTES: Groundwater not encountered. No caving. Boring backfilled with soil cuttings.
	7.5						
	10						
	12.5						
	15						
	17.5						
	20						

JOB G29013-1 DATE 7/13/2010 F.T. SK BY KSL ENGR. SK REV.
Note: The log of subsurface conditions shown hereon applies only at the specific boring location and at the date indicated. It is not warranted to be representative of subsurface conditions at other locations and times.

LOG OF BORING

PLATE A-1.9

BORING D10

DATE DRILLED: 12/16/09
EQUIPMENT USED: 8-Inch Diameter Hollow-stem-auger

ELEVATION (ft.)	DEPTH (ft.)	PID READINGS (ppm)	MOISTURE (% of dry wt.)	DRY DENSITY (lbs./cu. ft.)	BLOWS/FOOT	SAMPLE LOC.	
							SC 4" Asphalt Paving CLAYEY SAND - fine to medium, medium dense, moist, light reddish brown
	2.5	ND	6.1	123	20		
		ND	8.2	122	84		Dense, some gravel
	5						NOTES: Groundwater not encountered. No caving. Boring backfilled with soil cuttings.
	7.5						
	10						
	12.5						
	15						
	17.5						
	20						

JOB G29013-1 DATE 7/13/2010 F.T. SK BY KSL ENGR. SK REV.
Note: The log of subsurface conditions shown hereon applies only at the specific boring location and at the date indicated. It is not warranted to be representative of subsurface conditions at other locations and times.

LOG OF BORING

PLATE A-1.10

BORING D11

DATE DRILLED: 12/16/09
EQUIPMENT USED: 8-Inch Diameter Hollow-stem-auger

ELEVATION (ft.)	DEPTH (ft.)	PID READINGS (ppm)	MOISTURE (% of dry wt.)	DRY DENSITY (lbs./cu. ft.)	BLOWS/FOOT	SAMPLE LOC.	
							5" Asphalt Paving
							SM FILL - SILTY SAND - fine, medium dense, moist, some Clay, light yellowish brown
							SC CLAYEY SAND - fine to coarse, medium dense, moist, light brown
	2.5	ND	5.1	117	21		
							SW SAND - well graded, dense, moist, mottled brown and dark brown
		ND	8.6	121	77		GRANITE - moderately weathered, coarse, very dense to hard, light grey and light brown
	5						NOTES: Groundwater not encountered. No caving. Boring backfilled with soil cuttings.
	7.5						
	10						
	12.5						
	15						
	17.5						
	20						

JOB G29013-1 DATE 7/13/2010 F.T. SK BY KSL ENGR. SK REV.
Note: The log of subsurface conditions shown hereon applies only at the specific boring location and at the date indicated. It is not warranted to be representative of subsurface conditions at other locations and times.

LOG OF BORING

PLATE A-1.11

BORING D12

DATE DRILLED: 12/16/09
EQUIPMENT USED: 8-Inch Diameter Hollow-stem-auger

ELEVATION (ft.)	DEPTH (ft.)	PID READINGS (ppm)	MOISTURE (% of dry wt.)	DRY DENSITY (lbs./cu. ft.)	BLOWS/FOOT	SAMPLE LOC.	
							6" Asphalt Paving GRANITE - moderately weathered, coarse grained, very dense to hard, dry, brownish grey
	2.5	ND	2.0	104	100		Moderately weathered, light grey
		ND	1.9	105	100		
	5						NOTES: Groundwater not encountered. No caving. Boring backfilled with soil cuttings.
	7.5						
	10						
	12.5						
	15						
	17.5						
	20						

JOB G29013-1 DATE 7/13/2010 F.T. SK BY KSL ENGR. SK REV.
Note: The log of subsurface conditions shown hereon applies only at the specific boring location and at the date indicated. It is not warranted to be representative of subsurface conditions at other locations and times.

LOG OF BORING

PLATE A-1.12

REGISTERED PROFESSIONAL ENGINEER
JOSHUAN F. BERKOWITZ
NO. 60229
EXP. 6/30/12
CIVIL
STATE OF CALIFORNIA

JBY #0622-10

JB YOUNG & ASSOCIATES
CONSULTANT ENGINEERS
11440 RIVERSIDE DRIVE, SUITE M
LAKESIDE, CA 92040

DATE	SYM	REVISION	BY	A'PD

NATIONAL AERONAUTICS AND SPACE ADMINISTRATION
DRYDEN FLIGHT RESEARCH CENTER
EDWARDS, CA

DRAWING TITLE
SOIL BORING LOGS

PROJECT TITLE
REPAIR FLIGHTLINE ACCESS ROADS & AIRCRAFT RAMPS–DFRC, PHASE 1 OF 2
100% FINAL DESIGN

APPROVALS	DATE
Chief, Facilities Engineering & Asset Mgmt. Office	3-7-11
Project Manager	1-4-11
Facility Manager	1/5/11
Project Requestor/Customer	1/4/11
Safety, Health, & Environmental	1/6/11
Office of Protective Services	1/4/11
Office of the CO	1/5/11

DATE STRTD	7-29-09	DATE PRNTD	12-7-10
DRAWN BY	JFB		EDM-1706
SCALE	GRAPHIC	TRADE SH. No. T-5	
FILE NAME		SHEET No. 5 of 43	

JOB G29013-1 DATE 7/13/2010 F.T. SK BY KSL ENGR. SK REV.

Note: The log of subsurface conditions shown hereon applies only at the specific boring location and at the date indicated. It is not warranted to be representative of subsurface conditions at other locations and times.

BORING D13

DATE DRILLED: 12/16/09
EQUIPMENT USED: 8-Inch Diameter Hollow-stem-auger

ELEVATION (ft.)	DEPTH (ft.)	PID READINGS (ppm)	MOISTURE (% of dry wt.)	DRY DENSITY (lbs./cu. ft.)	BLOWS/FOOT	SAMPLE LOC.	
							SM — 3" Asphalt Paving - 3" Aggregate Base SILTY SAND - fine to coarse, medium dense, moist, porous, light reddish brown
	2.5	ND	4.0	119	19		
		ND	4.8	113	100		GRANITE - highly weathered, coarse grained, very dense, moist, light brown and light grey
	5						NOTES: Groundwater not encountered. No caving. Boring backfilled with soil cuttings.
	7.5						
	10						
	12.5						
	15						
	17.5						
	20						

LOG OF BORING

PLATE A-1.13

JOB G29013-1 DATE 7/13/2010 F.T. SK BY KSL ENGR. SK REV.

Note: The log of subsurface conditions shown hereon applies only at the specific boring location and at the date indicated. It is not warranted to be representative of subsurface conditions at other locations and times.

BORING D14

DATE DRILLED: 12/16/09
EQUIPMENT USED: 8-Inch Diameter Hollow-stem-auger

ELEVATION (ft.)	DEPTH (ft.)	PID READINGS (ppm)	MOISTURE (% of dry wt.)	DRY DENSITY (lbs./cu. ft.)	BLOWS/FOOT	SAMPLE LOC.	
							SC — 2-1/2" Asphalt Paving - 7" Aggregate Base CLAYEY SAND - fine to medium, dense, moist, light brown
	2.5	ND	8.0	116	37		Medium to coarse
		ND	8.7	127	34		SP-SC — SAND, slightly Clayey - medium to coarse, dense, moist, light brown
	5						NOTES: Groundwater not encountered. No caving. Boring backfilled with soil cuttings.
	7.5						
	10						
	12.5						
	15						
	17.5						
	20						

LOG OF BORING

PLATE A-1.14

JOB G29013-1 DATE 7/13/2010 F.T. SK BY KSL ENGR. SK REV.

Note: The log of subsurface conditions shown hereon applies only at the specific boring location and at the date indicated. It is not warranted to be representative of subsurface conditions at other locations and times.

BORING D15

DATE DRILLED: 12/16/09
EQUIPMENT USED: 8-Inch Diameter Hollow-stem-auger

ELEVATION (ft.)	DEPTH (ft.)	PID READINGS (ppm)	MOISTURE (% of dry wt.)	DRY DENSITY (lbs./cu. ft.)	BLOWS/FOOT	SAMPLE LOC.	
							2" Asphalt Paving - 6" Aggregate Base
						SP	SAND - fine to coarse, dense, moist, light yellowish brown
	2.5	ND	3.9	124	49		Some Clay
		ND	19.6	108	61	SM	SILTY SAND - fine, medium dense, moist, some Clay, light brown
	5						NOTES: Groundwater not encountered. No caving. Boring backfilled with soil cuttings.
	7.5						
	10						
	12.5						
	15						
	17.5						
	20						

LOG OF BORING

PLATE A-1.15

REGISTERED PROFESSIONAL ENGINEER
JOSHUA L. BERGSTROM
NO. 60229
EXP. 6/30/12
CIVIL
STATE OF CALIFORNIA

JBY #0622-10

JB YOUNG & ASSOCIATES
CONSULTANT ENGINEERS
11440 RIVERSIDE DRIVE, SUITE M
LAKESIDE, CA 92040

DATE	SYM	REVISION	BY	A'PD

NATIONAL AERONAUTICS AND SPACE ADMINISTRATION
DRYDEN FLIGHT RESEARCH CENTER
EDWARDS, CA

DRAWING TITLE
SOIL BORING LOGS

PROJECT TITLE
REPAIR FLIGHTLINE ACCESS ROADS & AIRCRAFT RAMPS–DFRC, PHASE 1 OF 2
100% FINAL DESIGN

APPROVALS	DATE
Chief, Facilities Engineering & Asset Mgmt. Office	1-7-11
Project Manager	3/9/11
Facility Manager	1/5/11
Project Requestor/Customer	1/4/11
Safety, Health & Environmental	1/6/11
Office of Protective Services	1/4/11
Office of the CIO	1/5/11

DATE STRTD	7-29-09	DATE PRNTD	12-7-10
DRAWN BY	JFB		EDM-1706
SCALE	GRAPHIC	TRADE SH. No: T-6	
FILE NAME			SHEET No. 6 of 43

JOINT SPALLING REPAIR SCHEDULE

POINT #	LENGTH (IN)	WIDTH (IN)	# OF SIDES
1	8	10	1
2	96	5	2
3	7	2	1
4	12	12	CORNER
5	6	3	1
6	8	2	1
7	6	2	1
8	8	8	CORNER
9	6	6	CORNER
10	24	2	15
11	6	6	15
12	6	6	15
13	8	6	15
14	16	6	15
15	6	4	15
16	16	12	15
17	10	4	1
18	9	3	1
19	12	2	1
20	22	3	1
21	2	2	SPALL
22	6	6	1
23	6	2	1
24	12	2	1
25	216	3	1
26	4	4	CORNER
27	10	3	1
28	16	3	1
29	24	4	1
30	12	4	2
31	2	2	SPALL
32	6	6	1
33	9	3	2 CORNERS
34	16	5	1
35	2	2	SPALL
36	10	6	1
37	20	13	1
38	36	4	1
39	14	2	1
40	36	5	1
41	17	2	1
42	10	6	1
43	13	2	1
44	9	2	1
45	12	4	1
46	24	4	1
47	12	2	1
48	16	4	1
49	60	3	1
50	9	2	1
51	18	24	1
52	9	2	1
53	9	3	1
54	12	2	1
55	5	5	1
56	8	4	1
57	6	3	1
58	24	5	1
59	21	2	1
60	12	3	1

JOINT SPALLING REPAIR SCHEDULE

POINT #	LENGTH (IN)	WIDTH (IN)	# OF SIDES
61	6	3	1
62	24	6	1
63	15	5	1
64	6	6	CORNER
65	10	8	2
66	36	4	1
67	15	6	2
68	10	5	2
69	12	2	1
70	2	2	SPALL
71	18	5	1
72	32	3	1
73	24	3	1
74	16	4	1
75	48	2	1
76	6	6	CORNER
77	16	16	1
78	6	3	1
79	9	2	1
80	12	12	SPALLS (4 EA)
81	18	2	1
82	2	2	SPALL
83	2	2	SPALL
84	2	2	SPALL
85	12	4	2
86	12	3	1
87	6	3	1
88	12	3	1
89	9	3	1
90	6	6	CORNER
91	6	6	CORNER
92	6	6	CORNER
93	16	4	1
94	12	4	1
95	12	8	SPALL
96	12	6	CORNER
97	3	3	SPALL
98	12	2	1
99	48	3	1
100	16	2	1
101	9	2	1
102	16	2	2 CORNERS
103	24	7	1
104	9	4	2S
105	6	6	1
106	12	2	1
107	16	6	1
108	12	2	1
109	24	2	1
110	32	2	1
111	6	6	1
112	8	5	1
113	24	3	1
114	8	6	CORNER
115	4	4	SPALL
116	4	4	SPALL
117	10	2	1
118	8	2	2
119	12	2	1
120	6	6	CORNER

JOINT SPALLING REPAIR SCHEDULE

POINT #	LENGTH (IN)	WIDTH (IN)	# OF SIDES
121	16	2	1
122	12	6	CORNER
123	3	3	SPALL
124	18	2	1
125	9	2	1
126	36	3	1
127	6	2	1
128	10	3	2 CORNER
129	24	2	1
130	9	2	1
131	18	3	1
132	18	2	1
133	48	2	2 CORNERS
134	32	16	1
135	32	2	1
136	16	2	1
137	6	10	1
138	36	9	1
139	14	2	1
140	10	2	1
141	12	2	1
142	6	2	1
143	24	2	CRACK
144	6	6	CORNER
145	12	2	1
146	18	2	1
147	10	2	1
148	6	6	CORNER
149	18	2	1
150	24	2	1
151	12	2	1
152	6	6	CORNER
153	8	2	1
154	12	2	1
155	12	2	1
156	96	3	CRACK
157	6	2	1
158	6	2	1
159	24	2	2
160	12	4	1
161	9	2	1
162	24	2	1
163	9	9	CORNER
164	12	2	1
165	9	9	1
166	12	3	1
167	10	2	1
168	9	9	CORNER
169	12	3	1
170	6	2	1
171	2	2	SPALL
172	6	2	1
173	12	2	1
174	12	2	1
175	18	2	1
176	6	2	1
177	12	2	2
178	6	2	1
179	6	2	1
180	6	2	1

JOINT SPALLING REPAIR SCHEDULE

POINT #	LENGTH (IN)	WIDTH (IN)	# OF SIDES
181	6	2	1
182	9	9	CORNER
183	6	2	1
184	6	2	1
185	24	2	1
186	6	2	1
187	24	3	1
188	9	9	CORNER
189	12	2	1
190	9	3	1
191	12	12	1
192	9	2	1
193	12	2	1
194	30	4	1
195	6	6	CORNER
196	12	2	1
197	50	3	1
198	6	6	CORNER
199	24	12	CORNER
200	16	15	1
201	12	4	1
202	12	12	CORNER
203	20	2	1
204	18	2	1
205	18	2	1
206	30	2	1
207	16	2	1
208	25	5	1
209	36	5	1
210	6	6	3 CORNERS
211	30	2	1
212	12	2	1
213	24	3	1
214	6	6	1
215	48	2	2
216	6	6	1
217	6	6	CORNER
218	20	9	1
219	36	3	1
220	6	6	CORNER
221	9	2	1
222	6	6	1
223	24	3	1
224	6	6	CORNER
225	15	13	2 CORNERS
226	15	16	1
227	23	7	1
228	103	11	1
229	72	6	1
230	18	5	2 CORNERS
231	10	8	CORNER
232	13	7	CORNER
233	14	5	1
234	30	9	1
235	17	12	CORNER
236	32	9	1
237	27	9	1
238	28	9	1
239	10	3	CORNER
240	18	9	CORNER

JOINT SPALLING REPAIR SCHEDULE

POINT #	LENGTH (IN)	WIDTH (IN)	# OF SIDES
241	42	9	1
242	6	6	1
243	14	2	1
244	9	9	CORNER
245	6	6	CORNER
246	36	3	1
247	36	3	1
248	18	10	2
249	9	9	SPALL
250	12	2	1
251	36	2	1
252	6	6	2 CORNERS
253	6	6	CORNER
254	9	6	1
255	6	6	2 CORNERS
256	12	12	CORNER
257	16	2	1
258	16	2	1
259	6	6	1
260	6	6	1
261	6	6	CORNER
262	6	6	CORNER
263	12	3	1
264	12	3	1
265	12	6	2 CORNER
266	6	6	2 CORNER
267	18	3	2

GENERAL NOTES

1. SEE CIVIL SITE PLAN #11 ON DRAWING C-11 FOR CONCRETE PAVEMENT SPALL REPAIR LOCATIONS. SEE DETAIL 1/C-11 C-30

REGISTERED PROFESSIONAL ENGINEER
JOHANAN P. BERACHAH
NO. 60229
EXP. 6/30/12
CIVIL
STATE OF CALIFORNIA

JBY #0622-10

JB YOUNG & ASSOCIATES
CONSULTANT ENGINEERS
11440 RIVERSIDE DRIVE, SUITE M
LAKESIDE, CA 92040

DATE	SYM	REVISION	BY	A'PD
3/4/11	1	STRIPING AND NOTE REVISIONS (GOV'T REVISIONS)		

NATIONAL AERONAUTICS AND SPACE ADMINISTRATION
DRYDEN FLIGHT RESEARCH CENTER
EDWARDS, CA

DRAWING TITLE
CONC PVMT SPALL REPAIR LEGEND

PROJECT TITLE
REPAIR FLIGHTLINE ACCESS ROADS & AIRCRAFT RAMPS-DFRC, PHASE 1 OF 2
100% FINAL DESIGN

APPROVALS	DATE
Chief, Facilities Engineering & Asset Mgmt. Office	3-7-11
Project Manager	1-4-11
Facility Manager	1/5/11
Project Requestor/Customer	1/4/11
Safety, Health & Environmental	1/6/11
Office of Protective Services	1/4/11
Office of the CIO	1/5/11

DATE STRTD	7-29-09	DATE PRNTD	12-7-10
DRAWN BY	JFB		EDM-1706
SCALE	GRAPHIC	TRADE SH. No.	I-7
FILE NAME		SHEET No.	7 of 43

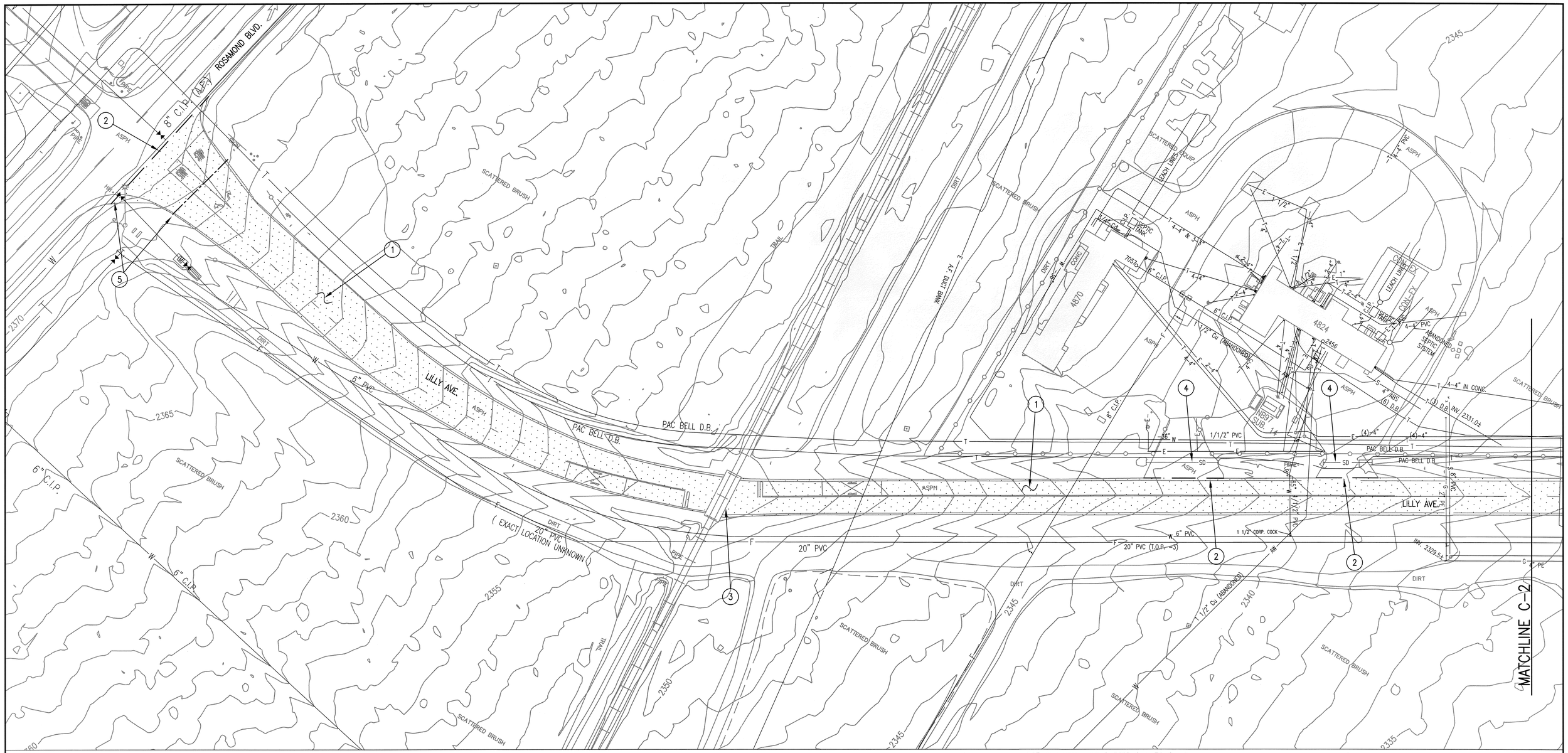

(XX) NOTES:

1) GRIND UP EXISTING ASPHALT. MIX WITH SUBGRADE, CEMENT, AND WATER PER FDR METHOD TO PROVIDE NEW PAVEMENT BASE PER SPECIFICATIONS, SEE DETAIL 2 / C-1 | C-29
2) SAWCUT ASPHALT PAVEMENT.
3) CONCRETE RAILROAD TRACKS TO REMAIN.
4) REMOVE AND DISPOSE OF SILT & DEBRIS FROM EXST CULVERT. GRADE SMOOTH TRANSITION 20' FROM CULVERT INLET & OUTLET.
5) REMOVE AND DISPOSE OF ASPHALT PAVEMENT. GRIND UP SUBGRADE AND MIX WITH CEMENT & WATER PER FDR METHOD TO PROVIDE NEW PAVEMENT BASE PER SPECIFICATIONS. PROVIDE SMOOTH TRANSITION BETWEEN THE RAISED LILLY ROAD AND THE END OF PVMT REPAIR PER GRADING PLAN. SEE DETAIL 1 / C-1 | C-29

CIVIL SITE WORK LEGEND (FOR DRAWINGS C-1 TO C-10):

- SWEEP & CLEAN EXST ASPHALT PAVEMENT. REMOVE ANY VEGETATION OR DEBRIS. SLURRY SEAL ASPHALT PAVEMENT.
- REMOVE AND DISPOSE OF ASPHALT PAVEMENT OR GRIND UP & RE-USE FOR NEW PAVEMENT BASE PER FDR METHOD. SEE PLAN NOTES AND DETAILS FOR MORE INFORMATION.
- GRIND, REMOVE, & DISPOSE OF 1" OF EXST ASPHALT PVMT. PREPARE FOR OVERLAY.
- PAVEMENT SAWCUT LINE
- CLEAN OUT ASPHALT PVMT CRACKS. INSTALL BITUMINOUS SEALER.
- TRANSITION LINE BETWEEN PVMT REMOVAL & GRINDING UP PVMT FOR FDR METHOD.

GRAPHIC SCALE: 1"=40'

0 20' 40' 80' 120'

TRUE NORTH

POTHOLE NOTE FOR SHEETS C-1 TO C-10:

CONTRACTOR SHALL USE AN UNDERGROUND UTILITY LOCATION SERVICE TO LOCATE ALL KNOWN AND UNKNOWN UTILITY SERVICES WITHIN THE LIMITS OF PAVEMENT REPLACEMENT WORK. CONTRACTOR SHALL POTHOLE AND DETERMINE DEPTH OF ALL UNDERGROUND UTILITIES CROSSING THE LIMITS OF PAVEMENT REPLACEMENT WORK. CONTRACTOR SHALL ALLOW BASE FACILITY MAINTENANCE PERSONNEL TO INSPECT ALL POTHOLES BEFORE THEY ARE BACKFILLED. CONTRACTOR SHALL RECORD ALL UNDERGROUND UTILITY DEPTHS ON ASBUILTS. CONTRACTOR SHALL NOTIFY FACILITIES MAINTENANCE DEPARTMENT PERSONNEL AND DESIGNER OF RECORD IF ANY UNDERGROUND UTILITIES ARE SHALLOWER THAN 24" BELOW TOP OF EXISTING OR PROPOSED GRADE. CONTRACTOR MAY HAVE TO HAND COMPACT SUBGRADE IF EXST UTILITIES ARE SHALLOWER THAN 20" DEEP.

REGISTERED PROFESSIONAL ENGINEER JONATHAN E. BERGHOLZ NO. 60229 EXP. 6/30/12 CIVIL STATE OF CALIFORNIA

JBY #0622-10

JB YOUNG & ASSOCIATES
CONSULTANT ENGINEERS
11440 RIVERSIDE DRIVE, SUITE M
LAKESIDE, CA 92040

DATE	SYM	REVISION	BY	A'PD

NATIONAL AERONAUTICS AND SPACE ADMINISTRATION
DRYDEN FLIGHT RESEARCH CENTER
EDWARDS, CA

DRAWING TITLE
CIVIL SITE PLAN #1

PROJECT TITLE
REPAIR FLIGHTLINE ACCESS ROADS & AIRCRAFT RAMPS-DFRC, PHASE 1 OF 2
100% FINAL DESIGN

APPROVALS	DATE
Chief, Facilities Engineering & Asset Mgmt. Office	3-7-11
Project Manager	1-4-11
Facility Manager	1/5/11
Project Requestor/Customer	1/4/11
Safety, Health & Environmental	1/6/11
Office of Protective Services	1/4/11
Office of the CIO	1/5/11

DATE STRTD	7-29-09	DATE PRNTD	12-7-10
DRAWN BY	JFB		EDM-1706
SCALE	GRAPHIC	TRADE SH. No.	
FILE NAME		C-1	SHEET No. 8 of 43

XX NOTES:

1) GRIND UP EXISTING ASPHALT. MIX WITH SUBGRADE, CEMENT, AND WATER PER FDR METHOD TO PROVIDE NEW PAVEMENT BASE PER SPECIFICATIONS, SEE DETAIL 2 / C-2 | C-29
2) SAWCUT ASPHALT PAVEMENT.
3) NOT USED
4) NOT USED
5) REMOVE AND DISPOSE OF ASPHALT PAVEMENT. GRIND UP SUBGRADE AND MIX WITH CEMENT & WATER PER FDR METHOD TO PROVIDE NEW PAVEMENT BASE PER SPECIFICATIONS. PROVIDE SMOOTH TRANSITION BETWEEN THE RAISED LILLY ROAD AND THE EXISTING SWANN AVE PER GRADING PLAN, SEE DETAIL 1 / C-2 | C-29
6) REMOVE AND DISPOSE OF CONCRETE UTILITY SCAR PAVEMENT.
7) PROTECT EXST CONC GATE STOP.
8) REMOVE, DISPOSE, AND REPLACE EXISTING SURVEY MONUMENT. SEE NEW PAVEMENT PLANS.
9) SWEEP & CLEAN EXISTING ASPHALT PAVEMENT. CLEAN OUT PAVEMENT CRACKS AND INSTALL BITUMINOUS FILLER. SLURRY SEAL EXISTING ASPHALT PAVEMENT.

TRUE NORTH

GRAPHIC SCALE: 1"=40'
0 20' 40' 80' 120'

SEE CIVIL SITE WORK LEGEND SHEET C-1

REGISTERED PROFESSIONAL ENGINEER JONATHAN BERKSCHE NO. 60229 EXP. 6/30/12 CIVIL STATE OF CALIFORNIA

JBY #0622-10

JB YOUNG & ASSOCIATES
CONSULTANT ENGINEERS
11440 RIVERSIDE DRIVE, SUITE M
LAKESIDE, CA 92040

DATE	SYM	REVISION	BY	A'PD
3/4/11	1	STRIPING AND NOTE REVISIONS (GOV'T REVISIONS)		

NATIONAL AERONAUTICS AND SPACE ADMINISTRATION
DRYDEN FLIGHT RESEARCH CENTER
EDWARDS, CA

DRAWING TITLE
CIVIL SITE PLAN #2

PROJECT TITLE
REPAIR FLIGHTLINE ACCESS ROADS & AIRCRAFT RAMPS-DFRC, PHASE 1 OF 2
100% FINAL DESIGN

APPROVALS	DATE
Chief, Facilities Engineering & Asset Mgmt. Office	3-7-11
Project Manager	1-4-11
Facility Manager	1/5/11
Project Sequencer/Customer	1/4/11
Safety, Health & Environmental	1/6/11
Office of Contracting Services	1/4/11
Office of Chief CIO	1/5/11

DATE STRTD	7-29-09	DATE PRNTD	12-7-10
DRAWN BY	JFB	EDM-1706	
SCALE	GRAPHIC	TRADE SH. No. C-2	
FILE NAME		SHEET No. 9 of 43	

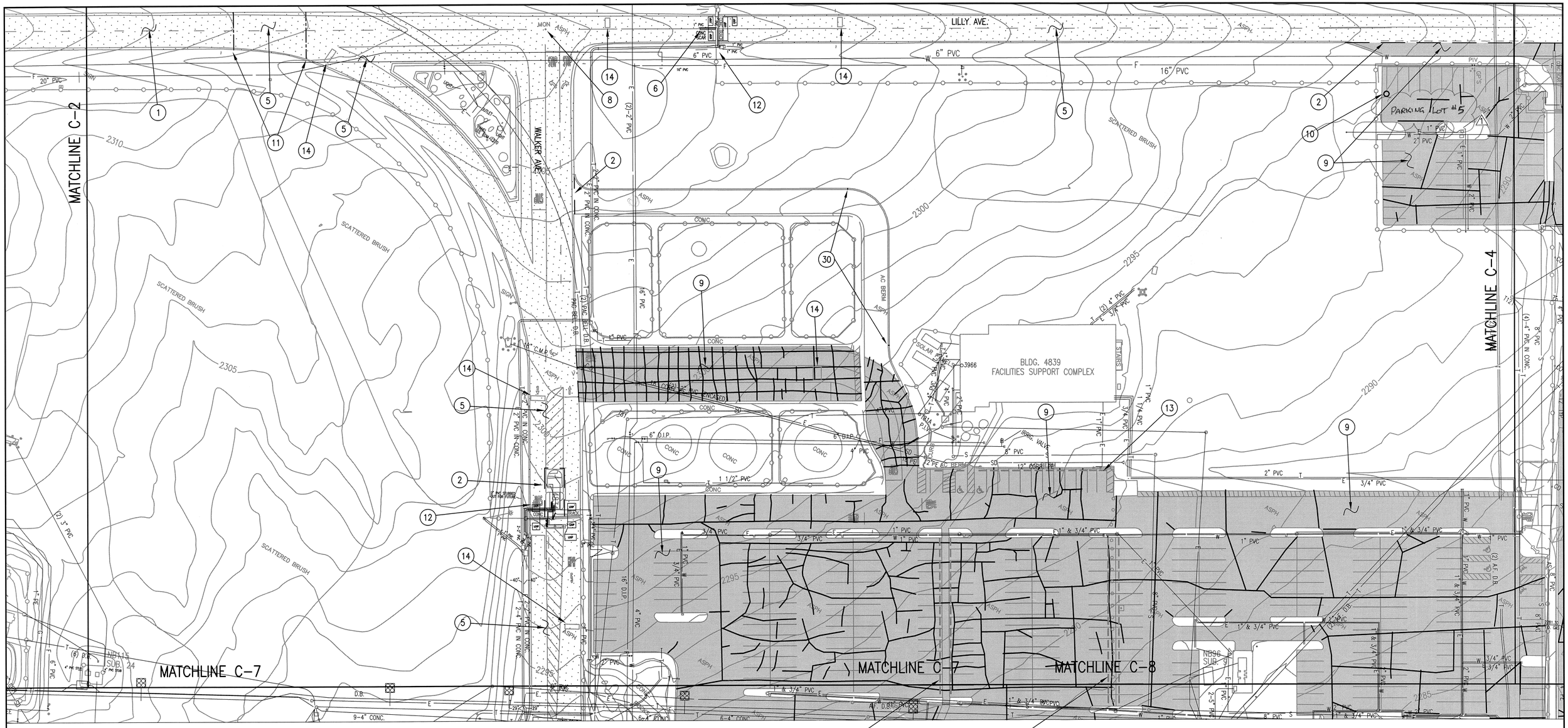

XX NOTES:

1) GRIND UP EXISTING ASPHALT. MIX WITH SUBGRADE, CEMENT, AND WATER PER FDR METHOD TO PROVIDE NEW PAVEMENT BASE PER SPECIFICATIONS, SEE DETAIL 2 / C-3 | C-29
2) SAWCUT ASPHALT PAVEMENT.
3) NOT USED
4) NOT USED
5) REMOVE AND DISPOSE OF ASPHALT PAVEMENT. GRIND UP SUBGRADE AND MIX WITH CEMENT & WATER PER FDR METHOD TO PROVIDE NEW PAVEMENT BASE PER SPECIFICATIONS, SEE DETAIL 1 / C-3 | C-29
6) REMOVE AND DISPOSE OF CONCRETE UTILITY SCAR PAVEMENT.
7) NOT USED
8) REMOVE, DISPOSE, AND REPLACE EXISTING SURVEY MONUMENT. SEE NEW PAVEMENT PLANS.
9) SWEEP & CLEAN EXISTING ASPHALT PAVEMENT. CLEAN OUT PAVEMENT CRACKS AND INSTALL BITUMINOUS FILLER. SLURRY SEAL EXISTING ASPHALT PAVEMENT.
10) REPAIR SMALL POT HOLE.
11) PROVIDE SMOOTH TRANSITION BETWEEN THE RAISED PORTION OF LILLY ROAD AND THE NON-RAISED PORTION OF LILLY ROAD PER GRADING PLAN.
12) PROTECT EXST GATE OPERATORS. REMOVE, DISPOSE, AND REPLACE PVMT LOOP DETECTORS TO MATCH EXST, SEE PAVEMENT PLAN.
13) REMOVE, SALVAGE, & REINSTALL WHEEL POSTS AND REBAR ANCHORS AFTER SLURRY SEAL IS INSTALLED (TYP), SEE DETAIL 4 / C-3 | C-8
14) REMOVE AND DISPOSE OF RUMBLE STRIP RAISED PLASTIC ROAD MARKERS.
15) TO 29) NOT USED.
30) SAWCUT, REMOVE, & DISPOSE OF ASPHALT BERM.

TRUE NORTH

GRAPHIC SCALE: 1"=40'
0 20' 40' 80' 120'

SEE CIVIL SITE WORK LEGEND SHEET C-1

REGISTERED PROFESSIONAL ENGINEER
JOHN HANLEY BERNICH
NO. 60229
EXP. 6/30/12
CIVIL
STATE OF CALIFORNIA

JBY #0622-10

JB YOUNG & ASSOCIATES
CONSULTANT ENGINEERS
11440 RIVERSIDE DRIVE, SUITE M
LAKESIDE, CA 92040

DATE	SYM	REVISION	BY	A'PD
3/4/11	1	STRIPING AND NOTE REVISIONS (GOV'T REVISIONS)		

NATIONAL AERONAUTICS AND SPACE ADMINISTRATION
DRYDEN FLIGHT RESEARCH CENTER
EDWARDS, CA

DRAWING TITLE
CIVIL SITE PLAN #3

PROJECT TITLE
REPAIR FLIGHTLINE ACCESS ROADS & AIRCRAFT RAMPS-DFRC, PHASE 1 OF 2
100% FINAL DESIGN

APPROVALS	DATE
Chief, Facilities Engineering & Asset Mgmt. Office	3-7-11
Project Manager	1-4-11
Facility Manager	1/5/11
Project Requestor/Customer	1/4/11
Safety, Health & Environmental	1/6/11
Office of Protective Services	1/4/11
Office of the CO	1/5/11

DATE STRTD	7-29-09	DATE PRNTD	12-7-10
DRAWN BY	JFB		EDM-1706
SCALE	GRAPHIC	TRADE SHL No. C-3	
FILE NAME		SHEET No. 10 of 43	

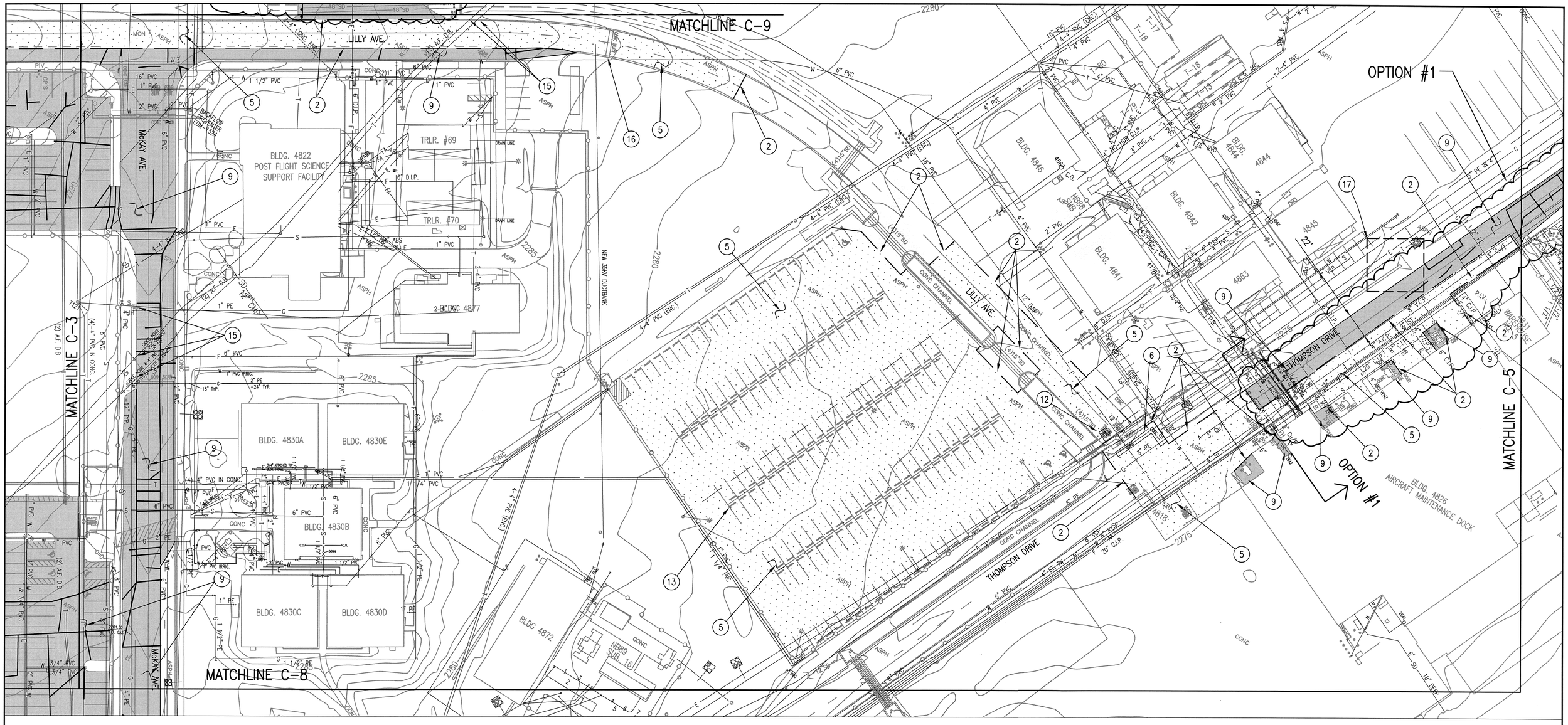

(XX) NOTES:

1) NOT USED
2) SAWCUT ASPHALT OR CONC PAVEMENT.
3) NOT USED
4) NOT USED
5) REMOVE AND DISPOSE OF ASPHALT PAVEMENT. GRIND UP SUBGRADE AND MIX WITH CEMENT & WATER PER FDR METHOD TO PROVIDE NEW PAVEMENT BASE PER SPECIFICATIONS, SEE DETAIL 1 / C-4 | C-29
6) REMOVE AND DISPOSE OF CONCRETE UTILITY SCAR PAVEMENT.
7) NOT USED
8) NOT USED
9) SWEEP & CLEAN EXISTING ASPHALT PAVEMENT. CLEAN OUT PAVEMENT CRACKS AND INSTALL BITUMINOUS FILLER. SLURRY SEAL EXISTING ASPHALT PAVEMENT.
10) TO 11) NOT USED
12) PROTECT EXST GATE OPERATORS. REMOVE, DISPOSE, AND REPLACE PVMT LOOP DETECTORS TO MATCH EXST, SEE PAVEMENT PLAN.
13) REMOVE, SALVAGE, & REINSTALL WHEEL POSTS AND REBAR ANCHORS AFTER SLURRY SEAL IS INSTALLED (TYP), SEE DETAIL 4 / C-4 | C-8
14) NOT USED
15) EXISTING U/G UTILITY IS KNOWN TO BE SHALLOW. TOP OF PIPE IS 12"± BELOW TOP OF PAVEMENT. CONTRACTOR SHALL POTHOLE THIS UTILITY BEFORE CONSTRUCTION.
16) EXISTING CONCRETE PAVEMENT TO REMAIN.
17) SEE SITE PLAN 3 ON C-27 FOR BLOW UP OF SITE.

SEE CIVIL SITE WORK LEGEND SHEET C-1

GRAPHIC SCALE: 1"=40'
0 20' 40' 80' 120'

TRUE NORTH

REGISTERED PROFESSIONAL ENGINEER
JONATHAN F. GERALD BERTHOLOTTE
NO. 60229
EXP. 6/30/12
CIVIL
STATE OF CALIFORNIA

JBY #0622-10

JB YOUNG & ASSOCIATES
CONSULTANT ENGINEERS
11440 RIVERSIDE DRIVE, SUITE M
LAKESIDE, CA 92040

DATE	SYM	REVISION	BY	A'PD
3/4/11	1	STRIPING AND NOTE REVISIONS (GOV'T REVISIONS)		

NATIONAL AERONAUTICS AND SPACE ADMINISTRATION
DRYDEN FLIGHT RESEARCH CENTER
EDWARDS, CA

DRAWING TITLE
CIVIL SITE PLAN #4

PROJECT TITLE
REPAIR FLIGHTLINE ACCESS ROADS & AIRCRAFT RAMPS-DFRC, PHASE 1 OF 2
100% FINAL DESIGN

APPROVALS	DATE
Chief, Facilities Engineering & Asset Mgmt. Office	3-7-11
Project Manager	1-4-11
Facility Manager	1/5/11
Project Requester/Customer	1/4/11
Safety, Health & Environmental	1/6/11
Office of Protective Services	1/4/11
Office of the CIO	1/5/11

DATE STRTD	7-29-09	DATE PRNTD	12-7-10
DRAWN BY	JFB		EDM-1706
SCALE	GRAPHIC	TRADE SH. No. C-4	
FILE NAME		SHEET No. 11 of 43	

MATCHLINE SEE BELOW

MATCHLINE C-4

OPTION #1

OPTION #1

THOMPSON DRIVE

4833 SHUTTLE HANGAR

4837 WAREHOUSE NO. 8

4853 FIRE PROTECTION PUMP STATION NO. 1

4859 SHUTTLE LABORATORY FACILITY

4864 ORBITER TURN-AROUND BLDG.

4879

SEE CIVIL SITE WORK LEGEND SHEET C-1

OPTION #1

THOMPSON DRIVE

MATCHLINE SEE ABOVE

(XX) NOTES:

1) TO 8) NOT USED

9) SWEEP & CLEAN EXISTING ASPHALT PAVEMENT.
CLEAN OUT PAVEMENT CRACKS AND INSTALL BITUMINOUS FILLER.
SLURRY SEAL EXISTING ASPHALT PAVEMENT.

17) SEE SITE PLAN 1 ON C-27 FOR BLOW UP OF SITE.

18) SEE SITE PLAN 2 ON C-27 FOR BLOW UP OF SITE.

GRAPHIC SCALE: 1"=40'

0 20' 40' 80' 120'

TRUE NORTH

REGISTERED PROFESSIONAL ENGINEER
JONATHAN BERNARD YOUNG
NO. 60229
EXP. 6/30/12
CIVIL
STATE OF CALIFORNIA

JBY #0622-10

JB YOUNG & ASSOCIATES
CONSULTANT ENGINEERS
11440 RIVERSIDE DRIVE, SUITE M
LAKESIDE, CA 92040

DATE	SYM	REVISION	BY	A'PD
3/4/11	1	STRIPING AND NOTE REVISIONS (GOV'T REVISIONS)		

NATIONAL AERONAUTICS AND SPACE ADMINISTRATION
DRYDEN FLIGHT RESEARCH CENTER
EDWARDS, CA

DRAWING TITLE
CIVIL SITE PLAN #5

PROJECT TITLE
REPAIR FLIGHTLINE ACCESS ROADS & AIRCRAFT RAMPS-DFRC, PHASE 1 OF 2
100% FINAL DESIGN

APPROVALS	DATE
Chief, Facilities Engineering & Asset Mgmt. Office	3-7-11
Project Manager	1-4-11
Facility Manager	1/5/11
Project Requester/Customer	1/4/11
Safety, Health & Environmental	1/6/11
Office of Operations Services	1/9/11
Office of the CO	1/5/11

DATE STRTD	7-29-09	DATE PRNTD	12-7-10
DRAWN BY	JFB	EDM-1706	
SCALE	GRAPHIC	TRADE SH. No.	
FILE NAME		C-5	SHEET No. 12 of 43

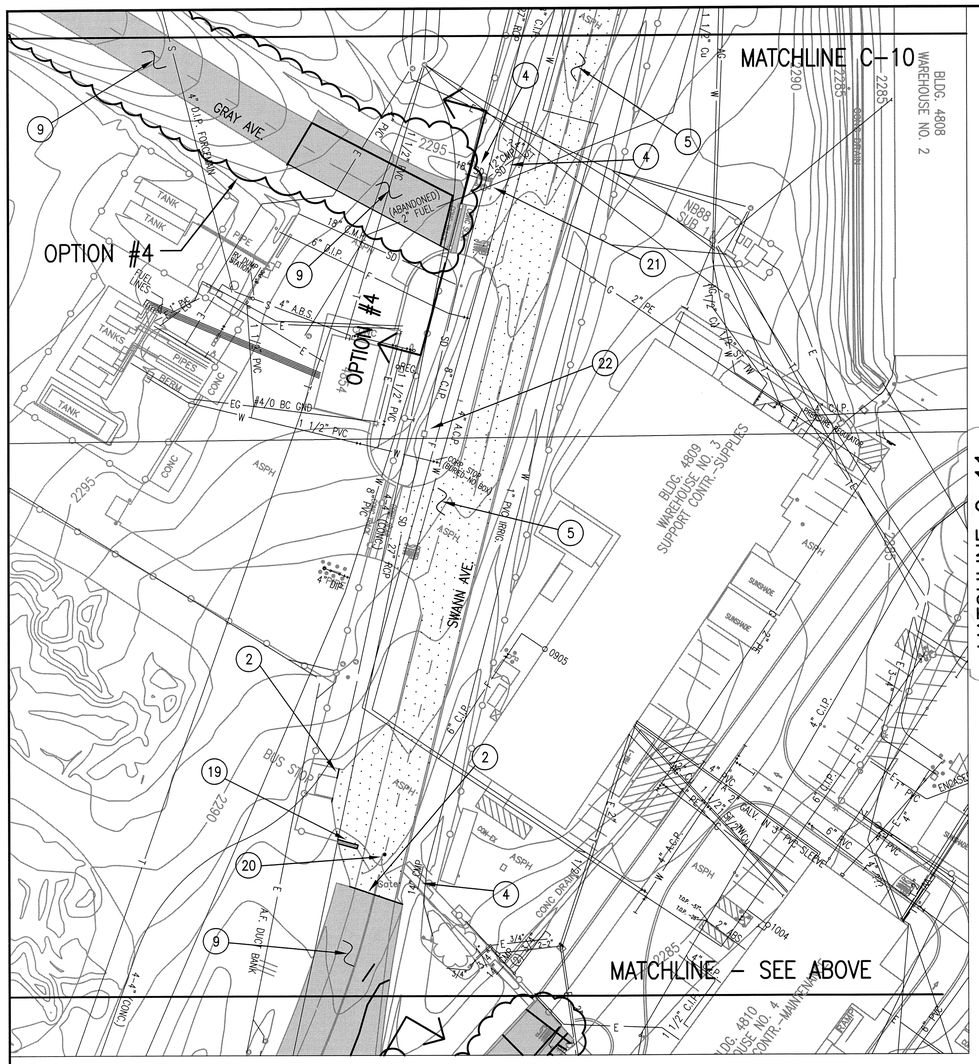

REPAIR SITE PLAN 6A

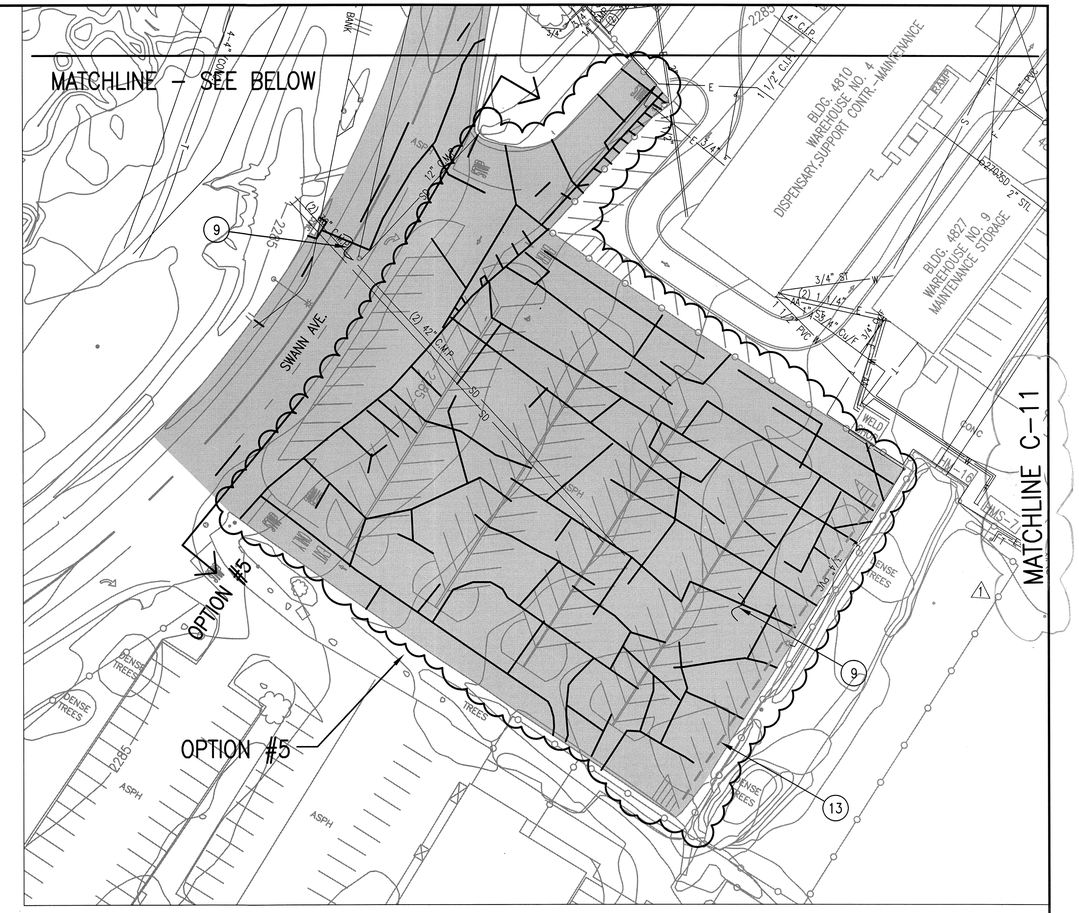

REPAIR SITE PLAN 6B

(XX) NOTES:

1) NOT USED
2) SAWCUT ASPHALT PAVEMENT.
3) NOT USED
4) REMOVE AND DISPOSE OF SILT & DEBRIS FROM EXST CULVERT. GRADE SMOOTH TRANSITION 20' FROM CULVERT INLET & OUTLET.
5) REMOVE AND DISPOSE OF ASPHALT PAVEMENT. GRIND UP SUBGRADE AND MIX WITH CEMENT & WATER PER FDR METHOD TO PROVIDE NEW PAVEMENT BASE PER SPECIFICATIONS, SEE DETAIL 1 / C-6 | C-29
6) TO 8) NOT USED
9) SWEEP & CLEAN EXISTING ASPHALT PAVEMENT. CLEAN OUT PAVEMENT CRACKS AND INSTALL BITUMINOUS FILLER. SLURRY SEAL EXISTING ASPHALT PAVEMENT.
10) TO 12) NOT USED
13) REMOVE, SALVAGE, & REINSTALL WHEEL POSTS AND REBAR ANCHORS AFTER SLURRY SEAL IS INSTALLED (TYP), SEE DETAIL 4 / C-6 | C-8
14) TO 18) NOT USED
19) SAWCUT EXISTING PAVEMENT 12" CLEAR OF EXISTING CHAIN LINK FENCING. SLURRY SEAL REMAINING PAVEMENT UNDER CHAIN LINK FENCE.
20) REMOVE, DISPOSE, AND REPLACE EXST GATE LOCK, SEE PAVEMENT PLANS.
21) REMOVE AND DISPOSE OF SILT & DEBRIS FROM EXST CATCH BASIN.
22) INSTALL NEW CONC APRON AROUND EXST STORM DRAIN CATCH BASIN, SEE DETAIL 3 / C-6 | C-8

SEE CIVIL SITE WORK LEGEND SHEET C-1

TRUE NORTH

GRAPHIC SCALE: 1"=40'

0 20' 40' 80' 120'

REGISTERED PROFESSIONAL ENGINEER — JOHANAN PINKOSKI — NO. 60229 — EXP. 6/30/12 — CIVIL — STATE OF CALIFORNIA

JBY #0622-10

JB YOUNG & ASSOCIATES
CONSULTANT ENGINEERS
11440 RIVERSIDE DRIVE, SUITE M
LAKESIDE, CA 92040

DATE	SYM	REVISION	BY	A'PD
3/4/11	1	STRIPING AND NOTE REVISIONS (GOV'T REVISIONS)		

NATIONAL AERONAUTICS AND SPACE ADMINISTRATION
DRYDEN FLIGHT RESEARCH CENTER
EDWARDS, CA

DRAWING TITLE
CIVIL SITE PLAN #6

PROJECT TITLE
REPAIR FLIGHTLINE ACCESS ROADS & AIRCRAFT RAMPS–DFRC, PHASE 1 OF 2
100% FINAL DESIGN

APPROVALS	DATE
Chief, Facilities Engineering & Asset Mgmt. Office	3-7-11
Project Manager	1-4-11
Facility Manager	1/5/11
Project Requestor/Customer	1/4/11
Safety, Health & Environmental	1/6/11
Office of Protective Services	1/4/11
Office of the CIO	1/5/11

DATE STRTD	7-29-09	DATE PRNTD	12-7-10
DRAWN BY	JFB		EDM-1706
SCALE	GRAPHIC	TRADE SH. No.	C-6
FILE NAME		SHEET No.	13 of 43

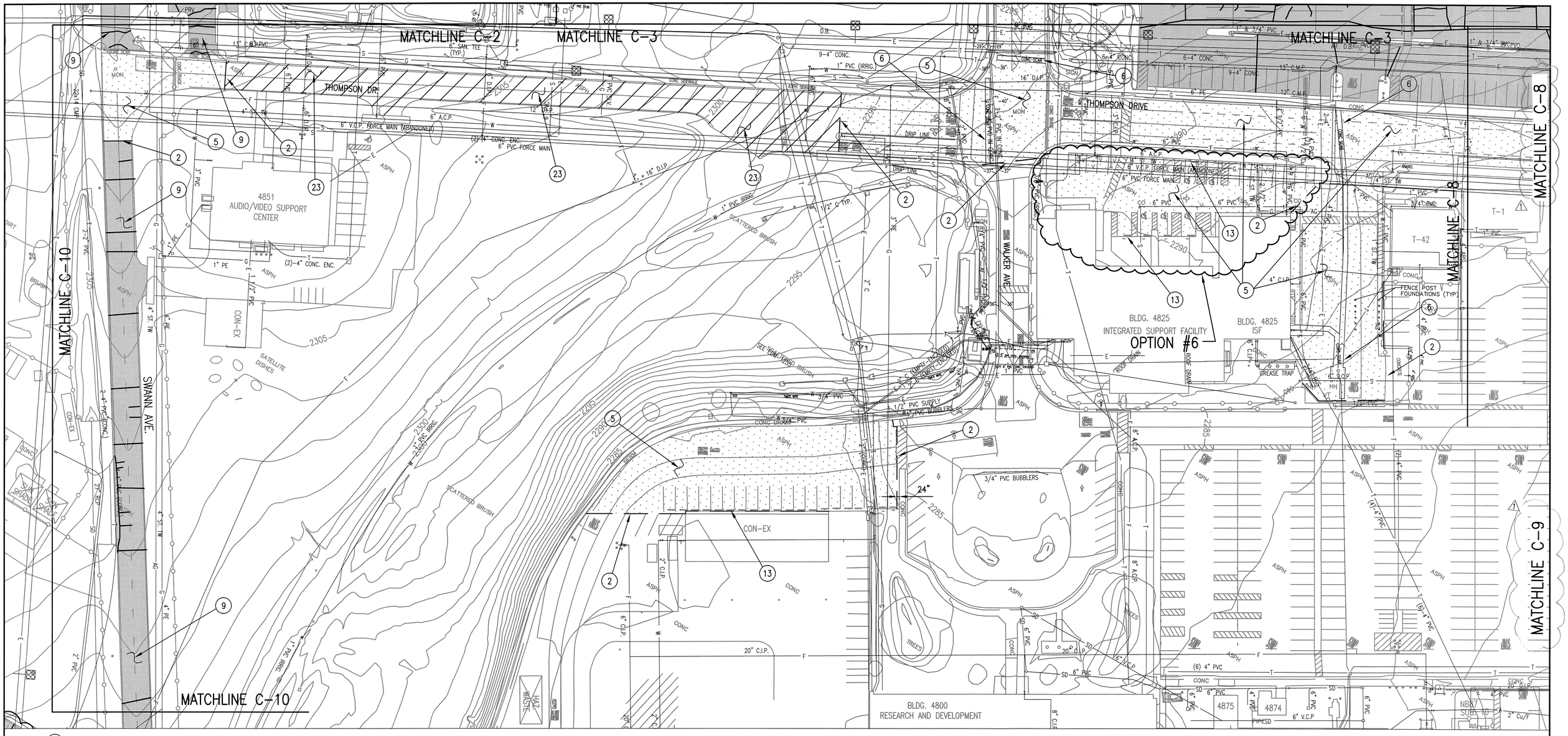

(XX) NOTES:

1) NOT USED
2) SAWCUT ASPHALT PAVEMENT.
3) TO 4) NOT USED
5) REMOVE AND DISPOSE OF ASPHALT PAVEMENT. GRIND UP SUBGRADE AND MIX WITH CEMENT & WATER PER FDR METHOD TO PROVIDE NEW PAVEMENT BASE PER SPECIFICATIONS, SEE DETAIL 1 / C-7 C-29
6) REMOVE AND DISPOSE OF CONCRETE UTILITY SCAR.
7) TO 8) NOT USED
9) SWEEP & CLEAN EXISTING ASPHALT PAVEMENT. CLEAN OUT PAVEMENT CRACKS AND INSTALL BITUMINOUS FILLER. SLURRY SEAL EXISTING ASPHALT PAVEMENT.
10) TO 12) NOT USED
13) REMOVE, SALVAGE, & REINSTALL WHEEL POSTS AND REBAR ANCHORS AFTER PVMT IS INSTALLED (TYP), SEE DETAIL 4 / C-7 C-8
14) TO 22) NOT USED
23) GRIND, REMOVE, & DISPOSE 1" OF EXISTING ASPHALT ROAD PAVEMENT WEAR SURFACE. INSTALL NEW 1.5" ASPHALT PAVEMENT WEAR SURFACE OVERLAY

SEE CIVIL SITE WORK LEGEND SHEET C-1

TRUE NORTH

GRAPHIC SCALE: 1"=40'

0 20' 40' 80' 120'

REGISTERED PROFESSIONAL ENGINEER JONATHAN F. BERNARCHI NO. 60229 EXP. 6/30/12 CIVIL STATE OF CALIFORNIA

JBY #0622-10

JB YOUNG & ASSOCIATES
CONSULTANT ENGINEERS
11440 RIVERSIDE DRIVE, SUITE M
LAKESIDE, CA 92040

DATE	SYM	REVISION	BY	A'PD
3/4/11	1	STRIPING AND NOTE REVISIONS (GOV'T REVISIONS)		

NATIONAL AERONAUTICS AND SPACE ADMINISTRATION
DRYDEN FLIGHT RESEARCH CENTER
EDWARDS, CA

DRAWING TITLE
CIVIL SITE PLAN #7

PROJECT TITLE
REPAIR FLIGHTLINE ACCESS ROADS & AIRCRAFT RAMPS-DFRC, PHASE 1 OF 2
100% FINAL DESIGN

APPROVALS	DATE
Chief, Facilities Engineering & Asset Mgmt. Office	3-7-11
Project Manager	1-4-11
Facility Manager	1/5/11
Project Requestor/Customer	1/4/11
Safety, Health & Environmental	1/6/11
Office of Protective Services	1/4/11
Office of the CO	1/5/11

DATE STRTD	7-29-09	DATE PRNTD	12-7-10
DRAWN BY	JFB	EDM-1706	
SCALE	GRAPHIC	TRADE SH. No.	C-7
FILE NAME		SHEET No.	14 of 43

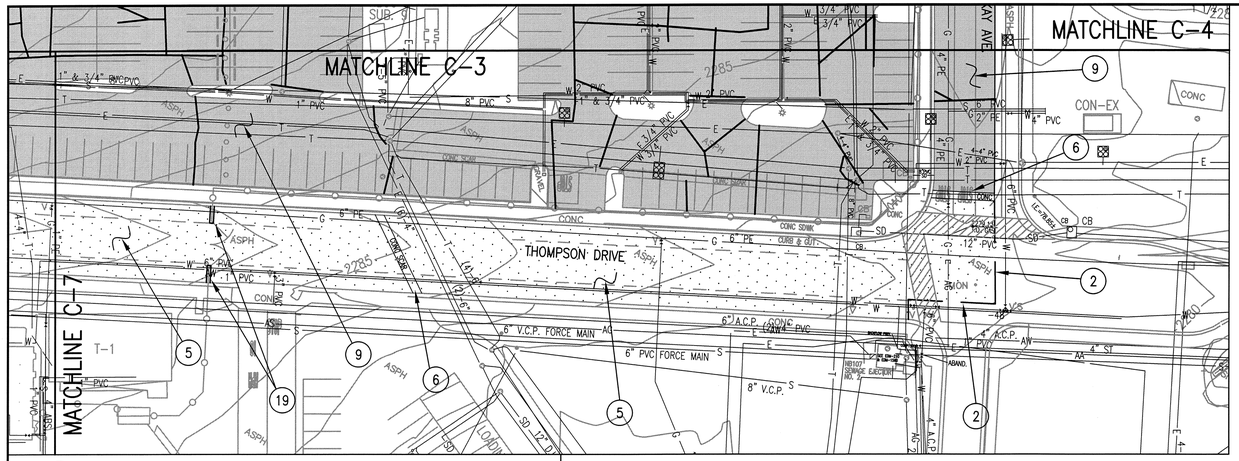

(XX) NOTES:

1) NOT USED
2) SAWCUT ASPHALT PAVEMENT.
3) TO 4) NOT USED
5) REMOVE AND DISPOSE OF ASPHALT PAVEMENT. GRIND UP SUBGRADE AND MIX WITH CEMENT & WATER PER FDR METHOD TO PROVIDE NEW PAVEMENT BASE PER SPECIFICATIONS, SEE DETAIL 1 C-8 C-29
6) REMOVE AND DISPOSE OF CONCRETE UTILITY SCAR PAVEMENT.
7) TO 8) NOT USED
9) SWEEP & CLEAN EXISTING ASPHALT PAVEMENT. CLEAN OUT PAVEMENT CRACKS AND INSTALL BITUMINOUS FILLER. SLURRY SEAL EXISTING ASPHALT PAVEMENT.
10) TO 18) NOT USED
19) SAWCUT EXISTING PAVEMENT 12" CLEAR OF EXISTING CHAIN LINK FENCING. SLURRY SEAL REMAINING PAVEMENT UNDER CHAIN LINK FENCE.

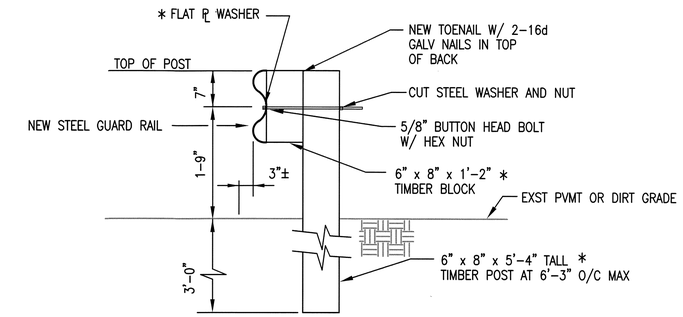

INSTALL NEW GUARD RAIL

DETAIL 1
NO SCALE
C-9 C-8

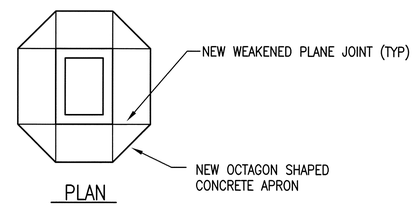

PLAN

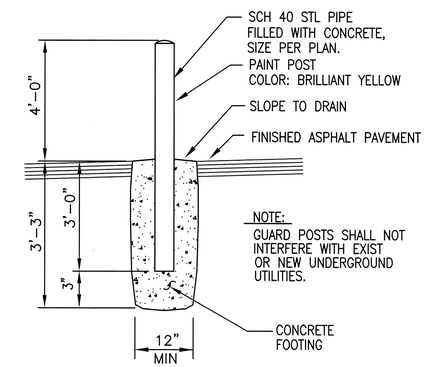

GUARD POST

DETAIL 2
NO SCALE
C-9 C-8
C-17
C-27

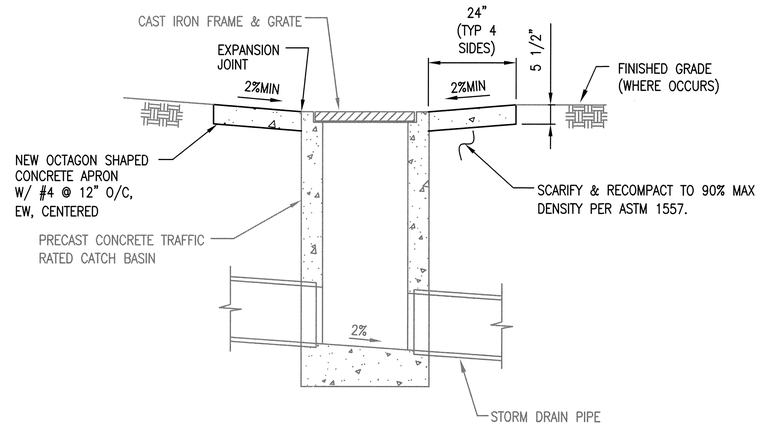

SECTION

NEW APRON FOR EXST CATCH BASIN

DETAIL 3
NO SCALE
C-6 C-8

SEE CIVIL SITE WORK LEGEND SHEET C-1

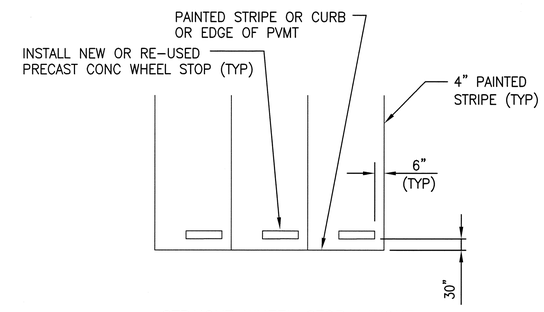

STRAIGHT WHEEL STOP LAYOUT

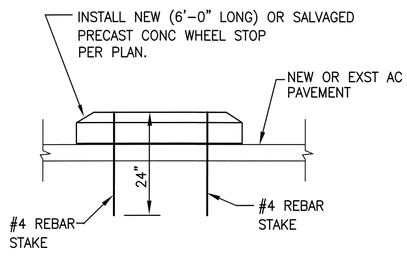

WHEEL STOP ELEVATION

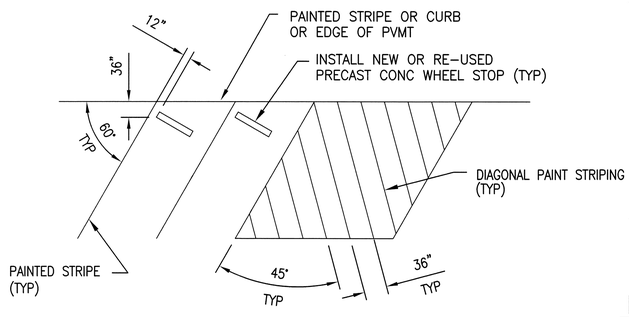

DIAGONAL WHEEL STOP LAYOUT

WHEEL STOP DETAIL

DETAIL 4
NO SCALE
C-3 C-8
C-4
C-6
C-7
C-10

GRAPHIC SCALE: 1"=40'
0 20' 40' 80' 120'

TRUE NORTH

REGISTERED PROFESSIONAL ENGINEER
JOHN DANIEL GERACHI
NO. 60229
EXP. 6/30/12
CIVIL
STATE OF CALIFORNIA

JBY #0622-10

JB YOUNG & ASSOCIATES
CONSULTANT ENGINEERS
11440 RIVERSIDE DRIVE, SUITE M
LAKESIDE, CA 92040

DATE	SYM	REVISION	BY	A'PD
3/4/11	1	STRIPING AND NOTE REVISIONS (GOV'T REVISIONS)		

NATIONAL AERONAUTICS AND SPACE ADMINISTRATION
DRYDEN FLIGHT RESEARCH CENTER
EDWARDS, CA

DRAWING TITLE
CIVIL SITE PLAN #8

PROJECT TITLE
REPAIR FLIGHTLINE ACCESS ROADS & AIRCRAFT RAMPS-DFRC, PHASE 1 OF 2
100% FINAL DESIGN

APPROVALS	DATE
Chief, Facilities Engineering & Asset Mgmt. Office	3-7-11
Project Manager	1-4-11
Facility Manager	1/5/11
Project Requestor/Customer	1/4/11
Safety, Health & Environmental	1/6/11
Office of Protocol Services	1/4/11
Office of the CIO	1/5/11

DATE STRTD	7-29-09	DATE PRNTD	12-7-10
DRAWN BY	JFB		EDM-1706
SCALE	GRAPHIC	TRADE SH. No. C-8	
FILE NAME		SHEET No. 15 of 43	

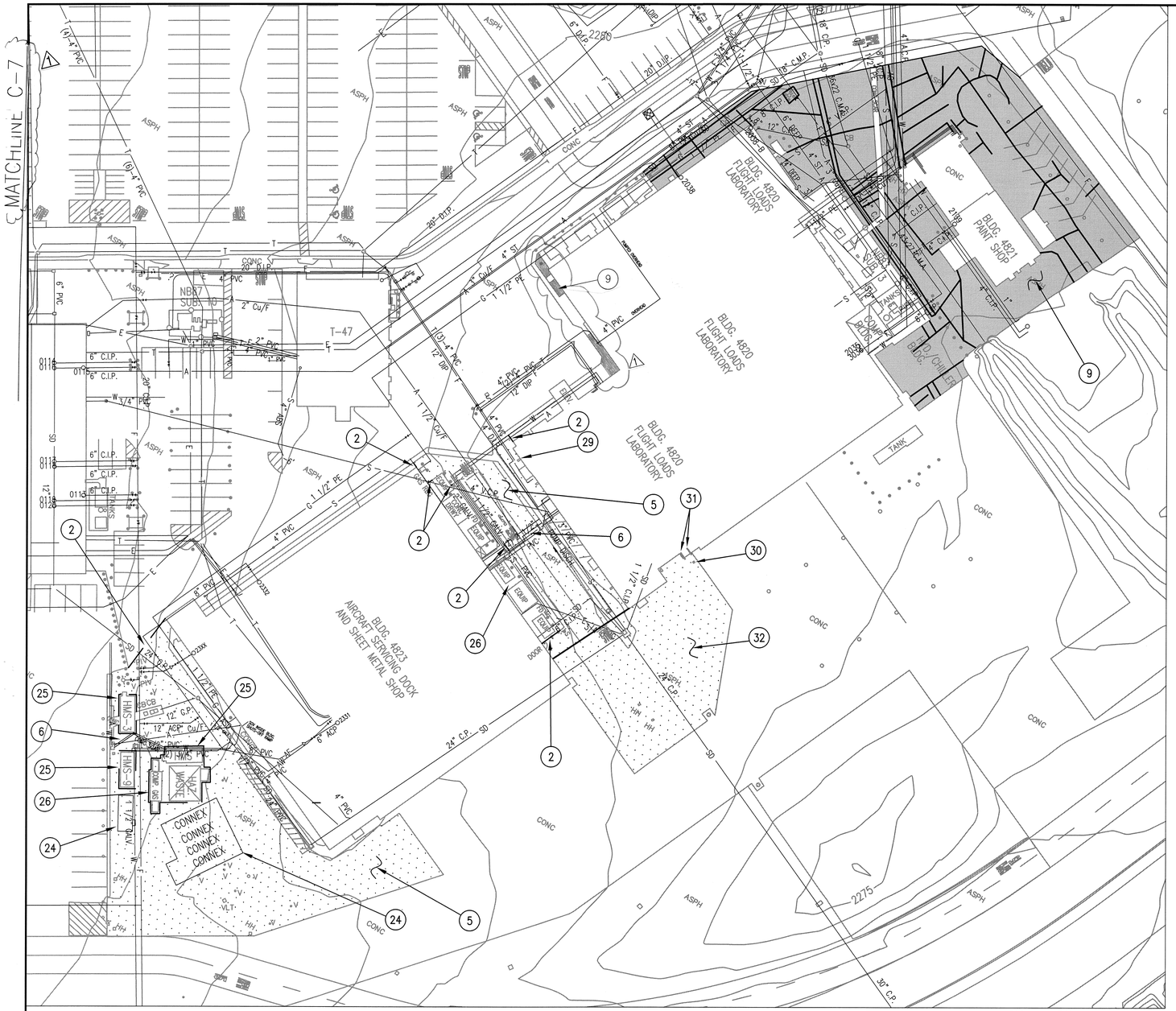

REPAIR SITE PLAN 9A

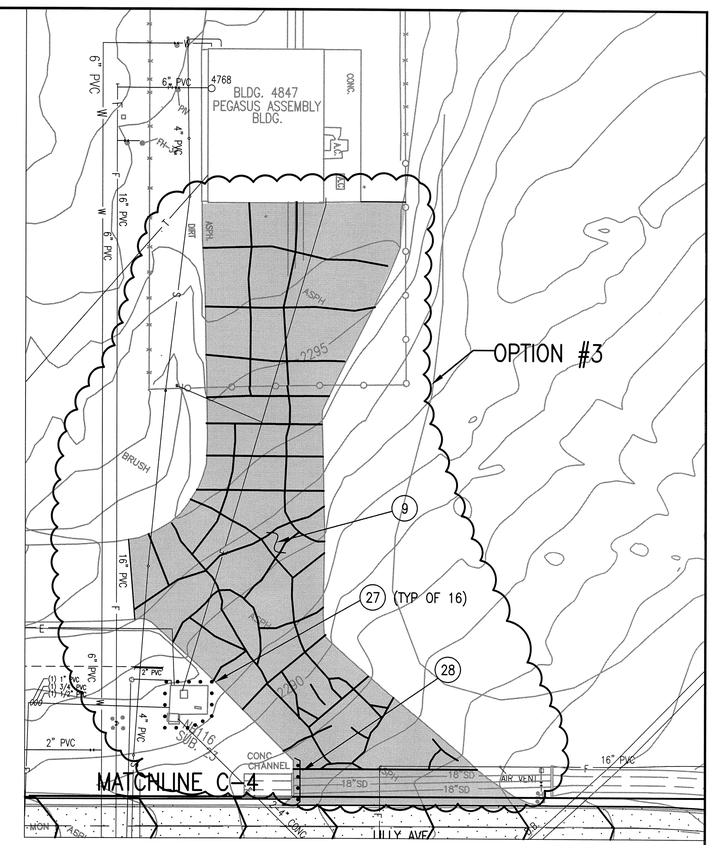

REPAIR SITE PLAN 9B

TRUE NORTH

GRAPHIC SCALE: 1"=40'

0 20' 40' 80' 120'

(XX) NOTES:

1) NOT USED
2) SAWCUT ASPHALT PAVEMENT.
3) TO 4) NOT USED
5) REMOVE AND DISPOSE OF ASPHALT PAVEMENT. GRIND UP SUBGRADE AND MIX WITH CEMENT & WATER PER FDR METHOD TO PROVIDE NEW PAVEMENT BASE PER SPECIFICATIONS, SEE DETAIL 1 / C-9 | C-29
6) REMOVE AND DISPOSE OF CONCRETE UTILITY SCAR PAVEMENT.
7) TO 8) NOT USED
9) SWEEP & CLEAN EXISTING ASPHALT PAVEMENT. CLEAN OUT PAVEMENT CRACKS AND INSTALL BITUMINOUS FILLER. SLURRY SEAL EXISTING ASPHALT PAVEMENT.
10) TO 23) NOT USED
24) EXISTING CON-EX BOXES OR TRAILERS TO BE RELOCATED BY GOVERNMENT OFFICIALS.
25) SAWCUT ASPHALT PVMT 12" CLEAR OF EXISTING TRAILER OR PVMT TO REMAIN.
26) FILL IN CRACKS & SLURRY SEAL ANY REMAINING ASPHALT PAVEMENT (TYP).
27) INSTALL NEW 6"ø GUARD POST AT 6' O/C AND 24" CLEAR OF CONC PAD, SEE DETAIL 2 / C-9 | C-8
28) INSTALL NEW GUARD RAIL, SEE DETAIL 1 / C-9 | C-8
LENGTH = 23', CENTERED ON HEADWALL. INSTALL 3' CLEAR OF HEADWALL. INSTALL METAL FLARED SECTION AT EACH END.
29) REMOVE, SALVAGE, AND RE-INSTALL SPLASH BLOCK AFTER CONSTRUCTION (TYP OF 4).
30) METAL SUPPORT POST TO REMAIN. PROTECT AS REQUIRED.
31) METAL WIND-BLOCK WALL TO REMAIN. PROTECT AS REQUIRED.
32) REMOVE AND DISPOSE OF ASPHALT PAVEMENT AND SUBGRADE, AS REQUIRED, FOR NEW CONC PVMT AND BASE.

SEE CIVIL SITE WORK LEGEND SHEET C-1

REGISTERED PROFESSIONAL ENGINEER JONATHAN E. BERNSCHI NO. 80229 EXP. 6/30/12 CIVIL STATE OF CALIFORNIA

JBY #0622-10

JB YOUNG & ASSOCIATES
CONSULTANT ENGINEERS
11440 RIVERSIDE DRIVE, SUITE M
LAKESIDE, CA 92040

DATE	SYM	REVISION	BY	A'PD
3/4/11	1	STRIPING AND NOTE REVISIONS (GOV'T REVISIONS)		

NATIONAL AERONAUTICS AND SPACE ADMINISTRATION
DRYDEN FLIGHT RESEARCH CENTER
EDWARDS, CA

DRAWING TITLE
CIVIL SITE PLAN #9

PROJECT TITLE
REPAIR FLIGHTLINE ACCESS ROADS & AIRCRAFT RAMPS-DFRC, PHASE 1 OF 2
100% FINAL DESIGN

APPROVALS	DATE
Chief, Facilities Engineering & Asset Mgmt. Office	3-7-11
Project Manager	3/4/11
Facility Manager	1/5/11
Project Requestor/Customer	1/4/11
Safety, Health & Environmental	1/6/11
Office of Protective Services	1/4/11
Office of the CIO	1/5/11

DATE STRTD	7-29-09	DATE PRNTD	12-7-10
DRAWN BY	JFB		EDM-1706
SCALE	GRAPHIC	TRADE SH. No. C-9	
FILE NAME		SHEET No. 16 of 43	

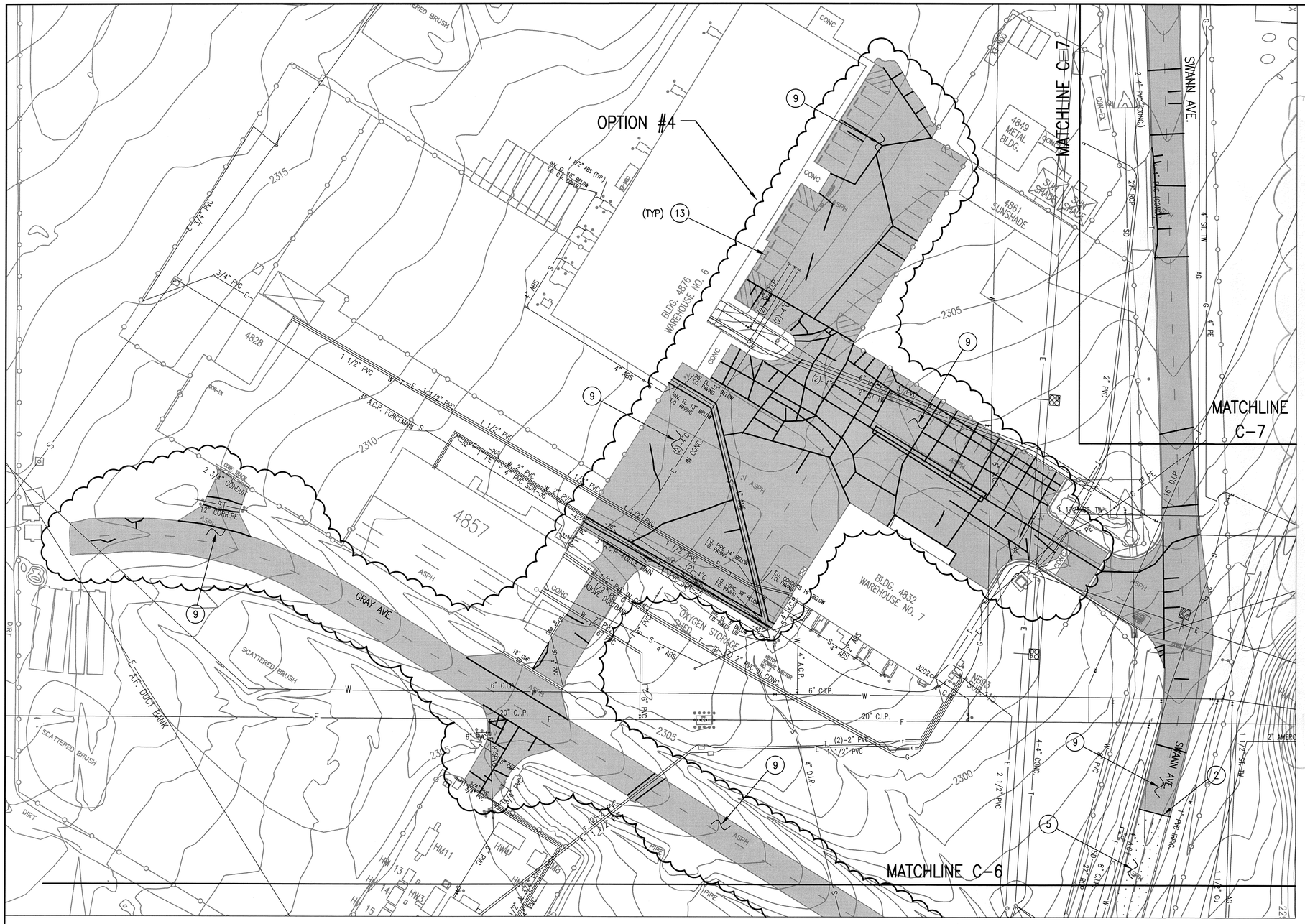

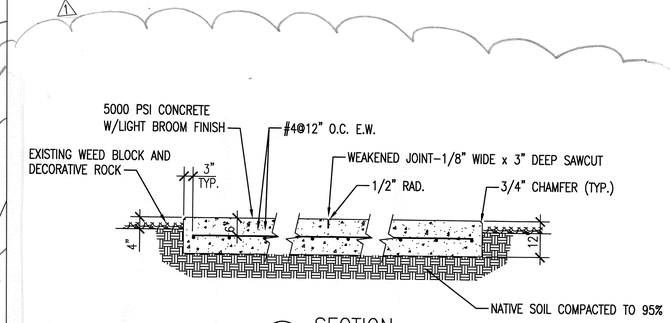

A — SECTION
SCALE: 1/2" = 1'-0"

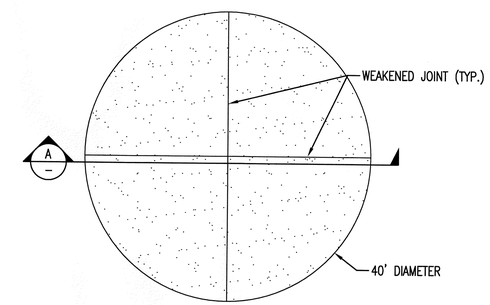

PLAN VIEW
SCALE: 1" = 10'

AIRCRAFT DISPLAY PAD (1) C-14 | C-10
SCALE: 1" = 10'

TRUE NORTH

GRAPHIC SCALE: 1"=40'
0 20' 40' 80' 120'

(XX) NOTES:

1) NOT USED
2) SAWCUT ASPHALT PAVEMENT.
3) TO 4) NOT USED
5) REMOVE AND DISPOSE OF ASPHALT PAVEMENT. GRIND UP SUBGRADE AND MIX WITH CEMENT & WATER PER FDR METHOD TO PROVIDE NEW PAVEMENT BASE PER SPECIFICATIONS, SEE DETAIL (1) C-10 | C-29
6) TO 8) NOT USED
9) SWEEP & CLEAN EXISTING ASPHALT PAVEMENT. CLEAN OUT PAVEMENT CRACKS AND INSTALL BITUMINOUS FILLER. SLURRY SEAL EXISTING ASPHALT PAVEMENT.
10) TO 12) NOT USED
13) REMOVE, SALVAGE, & REINSTALL WHEEL POSTS AND REBAR ANCHORS AFTER SLURRY SEAL IS INSTALLED (TYP), SEE DETAIL (4) C-10 | C-8

SEE CIVIL SITE WORK LEGEND SHEET C-1

REGISTERED PROFESSIONAL ENGINEER
JOSHUA E. BERKSHIRE
NO. 60229
EXP. 6/30/12
CIVIL
STATE OF CALIFORNIA

JBY #0622-10

JB YOUNG & ASSOCIATES
CONSULTANT ENGINEERS
11440 RIVERSIDE DRIVE, SUITE M
LAKESIDE, CA 92040

DATE	SYM	REVISION	BY	A'PD
3/4/11	1	STRIPING AND NOTE REVISIONS (GOV'T REVISIONS)		

NATIONAL AERONAUTICS AND SPACE ADMINISTRATION
DRYDEN FLIGHT RESEARCH CENTER
EDWARDS, CA

DRAWING TITLE
CIVIL SITE PLAN #10

PROJECT TITLE
REPAIR FLIGHTLINE ACCESS ROADS & AIRCRAFT RAMPS-DFRC, PHASE 1 OF 2
100% FINAL DESIGN

APPROVALS	DATE
Chief, Facilities Engineering & Asset Mgmt. Office	3-2-11
Project Manager	1-4-11
Facility Manager	1/5/11
Project Requestor/Customer	1/4/11
Safety, Health & Environmental	1/5/11
Office of Protective Services	1/4/11
Office of the CO	1/5/11

DATE STRTD	7-29-09	DATE PRNTD	12-7-10
DRAWN BY	JFB		EDM-1706
SCALE	GRAPHIC	TRADE SH. No.	C-10
FILE NAME		SHEET No.	17 of 43

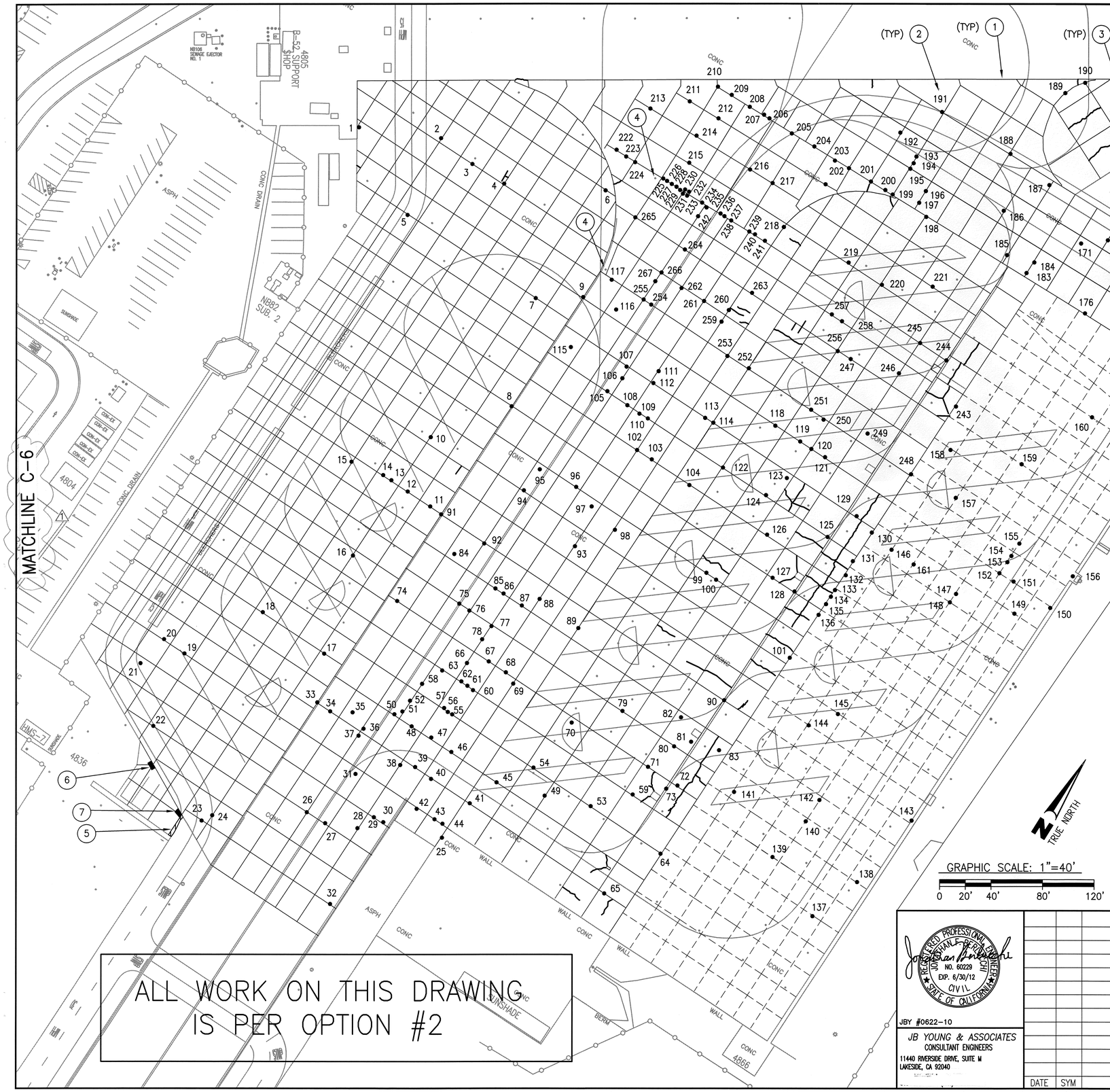

LEGEND (FOR DRAWING C-11 ONLY):

- REMOVE, DISPOSE, AND REPLACE EXISTING CONCRETE PAVEMENT.
- REMOVE AND DISPOSE OF EXISTING CONC PAVEMENT. INSTALL NEW ASPHALT PVMT
- REMOVE, DISPOSE, AND REPLACE OF EXISTING CONCRETE JOINT BACKER ROD & SEALANT.
- CLEAN OUT & SAWCUT EXISTING CONCRETE CRACKS. INSTALL NEW JOINT BACKER ROD & SEALANT.
- 20 – CONCRETE JOINT SPALLING IDENTIFICATION NUMBER. SEE DRAWING T-7 FOR SPALLING REPAIR SCHEDULE.
- EXISTING CONCRETE JOINT SEALANT TO REMAIN

GENERAL NOTE

A) CONTRACTOR SHALL REPLACE ANY PAVEMENT MARKINGS THAT IS REMOVED BY SPALL / JOINT REPAIR TO MATCH EXISTING.

(XX) NOTES:

1) REMOVE AND DISPOSE OF DEBRIS, SAND, VEGETATION, JOINT SEALANT, AND BACKER ROD INSIDE EXISTING CONCRETE JOINTS. INSTALL NEW BACKER ROD AND JOINT SEALANT, SEE DETAIL 4 / C-11 | C-30 JOINT WIDTH VARIES BETWEEN 2" AND 1/2".

2) SAWCUT, GRIND, REMOVE, AND DISPOSE OF EXISTING CONCRETE PAVEMENT JOINT SPALLING. REPAIR SPALLED CONCRETE JOINT. TYPICAL OF ALL SPALLED JOINTS SHOWN. SEE DETAIL 1 / C-11 | C-30

3) REMOVE AND DISPOSE OF DEBRIS, SAND, VEGETATION, JOINT SEALANT, AND BACKER ROD INSIDE EXISTING CONCRETE CRACKS. REPAIR CONCRETE PAVEMENT CRACKING. TYPICAL OF ALL CRACKING SHOWN. SEE DETAIL 2 / C-11 | C-30

4) REMOVE AND DISPOSE OF GROUNDING ROD 5" X 5" HANDHOLE WITH NO COVER. ROD TO REMAIN. INSTALL NEW 6" X 6" HANDHOLE, SEE DETAIL 4 / C-11 | C-36

5) SAWCUT, REMOVE AND DISPOSE OF 6" THICK CONCRETE PAVEMENT. INSTALL NEW ASPHALT PAVEMENT, SEE DETAIL 3 / C-11 | C-29

6) SAWCUT, REMOVE AND DISPOSE OF 3' X 6' X 6" THICK CONCRETE PAVEMENT. INSTALL NEW 6" THICK CONC PAVEMENT, SEE DETAIL 1 / C-11 | C-31 REPLACE JOINTS TO MATCH EXISTING.

7) SAWCUT, REMOVE AND DISPOSE OF 3.5' X 5' X 6" THICK CONCRETE PAVEMENT. INSTALL NEW 6" THICK CONC PAVEMENT, SEE DETAIL 1 / C-11 | C-31 REPLACE JOINTS TO MATCH EXISTING.

ALL WORK ON THIS DRAWING IS PER OPTION #2

REGISTERED PROFESSIONAL ENGINEER JONATHAN L. GERALD NO. 60229 EXP. 6/30/12 CIVIL STATE OF CALIFORNIA

JBY #0622-10

JB YOUNG & ASSOCIATES
CONSULTANT ENGINEERS
11440 RIVERSIDE DRIVE, SUITE M
LAKESIDE, CA 92040

DATE	SYM	REVISION	BY	A'PD

NATIONAL AERONAUTICS AND SPACE ADMINISTRATION
DRYDEN FLIGHT RESEARCH CENTER
EDWARDS, CA

DRAWING TITLE
CIVIL SITE PLAN #11

PROJECT TITLE
REPAIR FLIGHTLINE ACCESS ROADS & AIRCRAFT RAMPS-DFRC, PHASE 1 OF 2
100% FINAL DESIGN

APPROVALS	DATE
Chief, Facilities Engineering & Asset Mgmt. Office	3-7-11
Project Manager	1-4-11
Facility Manager	1/5/11
Project Requester/Customer	1/4/11
Safety, Health & Environment(s)	1/6/11
Office of Protective Services	1/4/11
Office of the CIO	1/5/11

DATE STRTD	7-29-09	DATE PRNTD	12-7-10
DRAWN BY	JFB		EDM-1706
SCALE	GRAPHIC	TRADE SH. No.	C-11
FILE NAME		SHEET No.	18 of 43

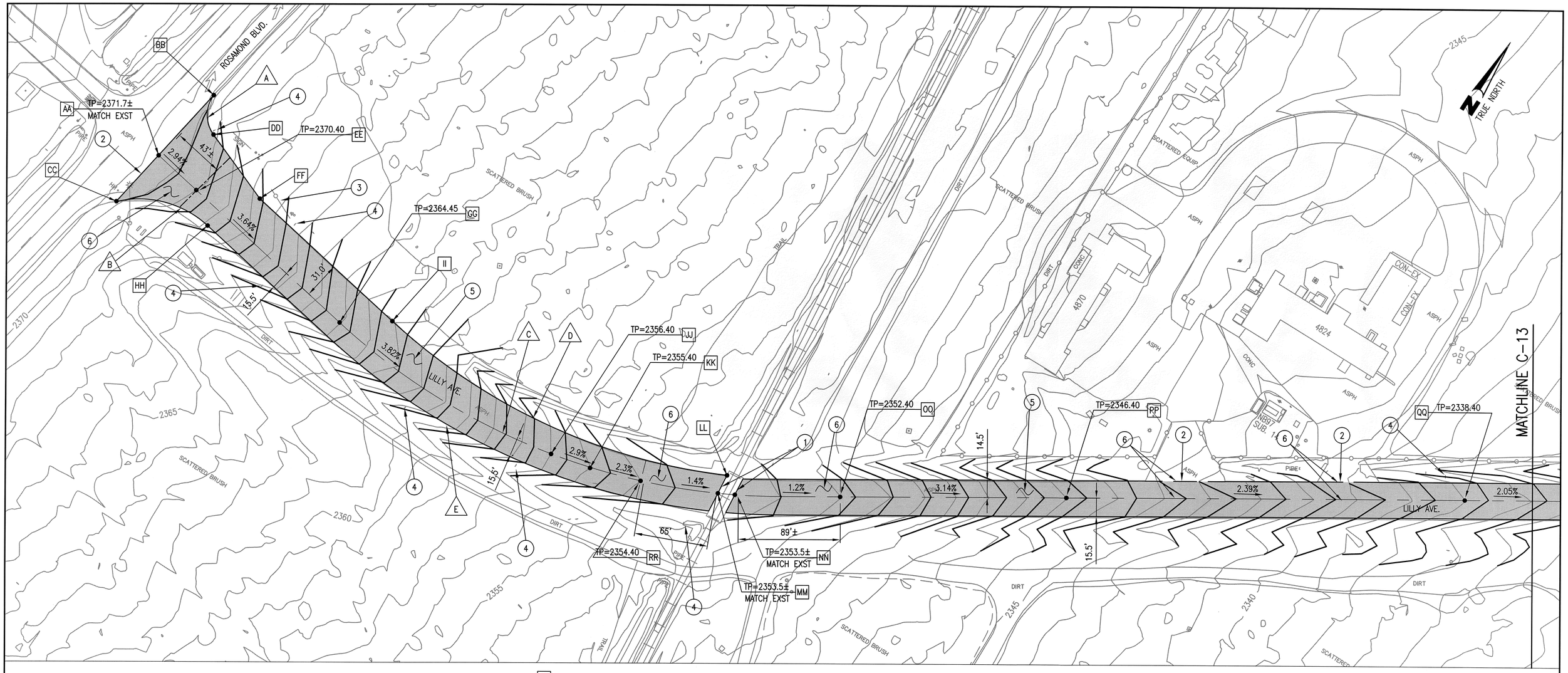

CIVIL PVMT & GRADING LEGEND (FOR DRAWINGS C-12 TO C-17):

- X 81.28 – SPOT GRADE
- ℄ – ROAD CENTER
- TP=2346.40 – TOP OF PVMT GRADE
- TC=2346.40 – TOP OF CURB
- 2.00% – FINISHED GRADE SLOPE
- CB – STORM DRAIN CATCH BASIN
- NEW ASPHALT PAVEMENT & FDR BASE. SEE NOTES AND DETAILS FOR MORE INFORMATION.
- 2340 – NEW CONTOUR

GRAPHIC SCALE: 1"=40'

0 20' 40' 80' 120'

XX LAYOUT DATA

ITEM	DESC	NORTHERN	EASTERN
AA	CENTERLINE, START	527494.42	2030791.72
BB	BEGIN CURVE, AC	527561.94	2003804.55
CC	BEGIN CURVE, AC	527442.23	2030781.81
DD	END CURVE , AC	527533.54	2030821.52
EE	GRADE BREAK, AC	527486.25	2030834.13
FF	EDGE OF AC	527508.33	2030883.45
GG	BEGIN OF CURVE, AC	527455.14	2030995.74
HH	END OF CURVE, AC	527465.85	2030858.12
II	EDGE OF AC	527479.57	2031032.83
JJ	GRADE BREAK, AC	527455.05	2031205.69
KK	GRADE BREAK, AC	527462.26	2031239.62
LL	EDGE OF AC	527518.55	2031341.10
MM	GRADE BREAK, AC	527501.84	2031342.48
NN	GRADE BREAK, AC	527508.24	2031355.33
OO	GRADE BREAK, AC	527553.83	2031431.75
PP	GRADE BREAK, AC	527653.88	2031593.10
QQ	GRADE BREAK, AC	527829.65	2031879.23
RR	GRADE BREAK, AC	527475.70	2031281.72

XX CURVE DATA

ITEM	RADIUS	LENGTH	ANGLE
A	28.00'	35.42'	72^29'15"
B	85.00'	83.07'	55^59'30"
C	550.00'	408.34'	42^32'19"
D	500.00'	315.96'	36^12'23"
E	565.00'	360.00'	36^28'29"

XX NOTES:

1) MATCH NEW ASPHALT PAVEMENT TO EXST CONCRETE PAVEMENT WITH PAINT BINDER.
2) MATCH NEW ASPHALT PAVEMENT TO EXST ASPHALT PAVEMENT WITH PAINT BINDER.
3) EXISTING METAL GATE TO REMAIN.
4) EXISTING SIGN TO REMAIN. REMOVE, SALVAGE, AND REINSTALL IN SAME LOCATION, IF REQUIRED, FOR GRADING.
5) INSTALL NEW ASPHALT PAVEMENT AND RE-CONDITIONED SUBGRADE USING THE FDR METHOD, SEE DETAIL 2 C-12 C-29
6) TRANSITION BETWEEN RAISED PAVEMENT GRADE AND EXISTING PAVEMENT GRADE, SEE DETAIL 1 C-12 C-29

REGISTERED PROFESSIONAL ENGINEER JONATHAN E. BERTUCCHI NO. 60229 EXP. 6/30/12 CIVIL STATE OF CALIFORNIA

JBY #0622-10

JB YOUNG & ASSOCIATES
CONSULTANT ENGINEERS
11440 RIVERSIDE DRIVE, SUITE M
LAKESIDE, CA 92040

DATE	SYM	REVISION	BY	A'PD

NATIONAL AERONAUTICS AND SPACE ADMINISTRATION
DRYDEN FLIGHT RESEARCH CENTER
EDWARDS, CA

DRAWING TITLE
PAVEMENT REPAIR SITE PLAN #1

PROJECT TITLE
REPAIR FLIGHTLINE ACCESS ROADS & AIRCRAFT RAMPS-DFRC, PHASE 1 OF 2
100% FINAL DESIGN

APPROVALS	DATE
Chief, Facilities Engineering & Asset Mgmt. Office	3-7-11
Project Manager	1-4-11
Facility Manager	1/5/11
Project Requestor/Customer	1/4/11
Safety, Health & Environmental	1/6/11
Office of Project Services	1/4/11
Office of the CIO	1/5/11

DATE STRTD	7-29-09	DATE PRNTD	12-7-10
DRAWN BY	JFB		EDM-1706
SCALE	GRAPHIC	TRADE SH. No.	C-12
FILE NAME		SHEET No.	19 of 43

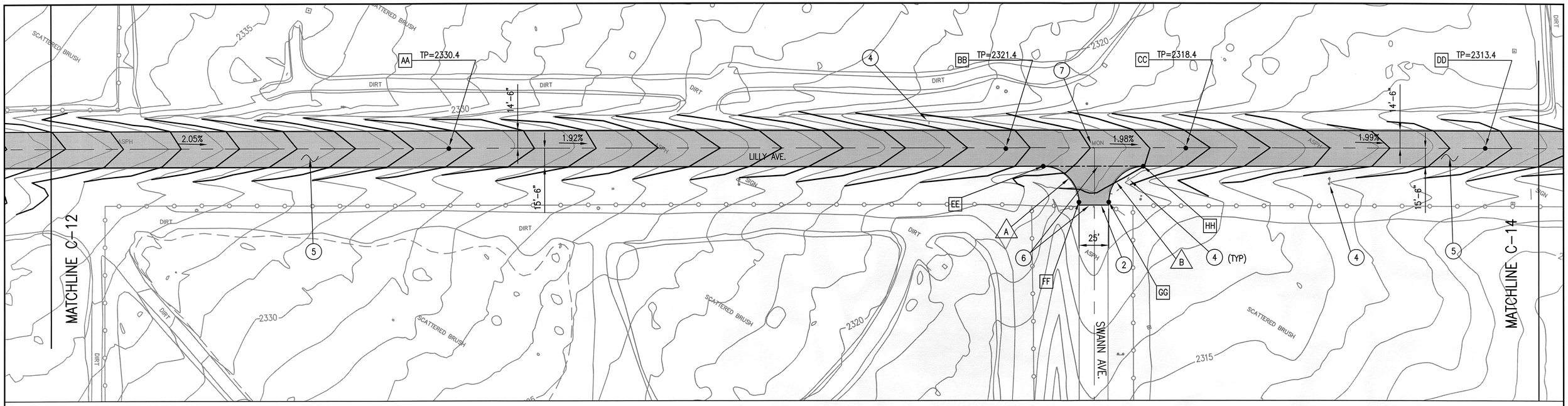

XX LAYOUT DATA

ITEM	DESC	NORTHERN	EASTERN
AA	GRADE BREAK, AC	528034.85	2032212.44
BB	GRADE BREAK, AC	528279.91	2032611.36
CC	GRADE BREAK, AC	528359.81	2032739.80
DD	GRADE BREAK, AC	528491.70	2032953.86
EE	BEGIN CURVE, AC	528283.74	2032645.91
FF	END CURVE, AC	528273.94	2032687.18
GG	END OF CURVE, AC	528287.10	2032708.55
HH	BEGIN CURVE, AC	528328.30	2032718
–	–	–	–
–	–	–	–
–	–	–	–

XX CURVE DATA

ITEM	RADIUS	LENGTH	ANGLE
A	30.00'	47.12'	90^
B	30.00'	47.12'	90^

XX NOTES:

1) NOT USED
2) MATCH NEW ASPHALT PAVEMENT TO EXST ASPHALT PAVEMENT WITH PAINT BINDER.
3) NOT USED
4) EXISTING SIGN TO REMAIN. REMOVE, SALVAGE, AND REINSTALL IN SAME LOCATION, IF REQUIRED, FOR GRADING.
5) INSTALL NEW ASPHALT PAVEMENT AND RE-CONDITIONED SUBGRADE USING THE FDR METHOD, SEE DETAIL 2 C-13 | C-29
6) TRANSITION BETWEEN RAISED PAVEMENT GRADE AND EXISTING PAVEMENT GRADE, SEE DETAIL 1 C-13 | C-29
7) REMOVE, DISPOSE, AND REPLACE SURVEY MONUMENT, SEE DETAIL 2 C-13 | C-31

GRAPHIC SCALE: 1"=40'

0 20' 40' 80' 120'

TRUE NORTH

SEE CIVIL PVMT & GRADING LEGEND SHEET C-12 (1)

REGISTERED PROFESSIONAL ENGINEER JONATHAN L. BERNSTEIN NO. 60229 EXP. 6/30/12 CIVIL STATE OF CALIFORNIA

JBY #0622-10

JB YOUNG & ASSOCIATES
CONSULTANT ENGINEERS
11440 RIVERSIDE DRIVE, SUITE M
LAKESIDE, CA 92040

DATE	SYM	REVISION	BY	A'PD
3/4/11	1	STRIPING AND NOTE REVISIONS (GOV'T REVISIONS)		

NATIONAL AERONAUTICS AND SPACE ADMINISTRATION
DRYDEN FLIGHT RESEARCH CENTER
EDWARDS, CA

DRAWING TITLE
PAVEMENT REPAIR SITE PLAN #2

PROJECT TITLE
REPAIR FLIGHTLINE ACCESS ROADS & AIRCRAFT RAMPS–DFRC, PHASE 1 OF 2
100% FINAL DESIGN

APPROVALS	DATE
Chief, Facilities Engineering & Asset Mgmt. Office	
Project Manager	1-4-11
Facility Manager	1/5/11
Project Requestor/Customer	1/4/11
Safety, Health & Environmental	1/6/11
Office of Operations Services	1/4/11
Office of the CIO	1/5/11

DATE STRTD	7-29-09	DATE PRNTD	12-7-10
DRAWN BY	JFB	EDM-1706	
SCALE	GRAPHIC	TRADE SH. No. C-13	
FILE NAME		SHEET No. 20 of 43	

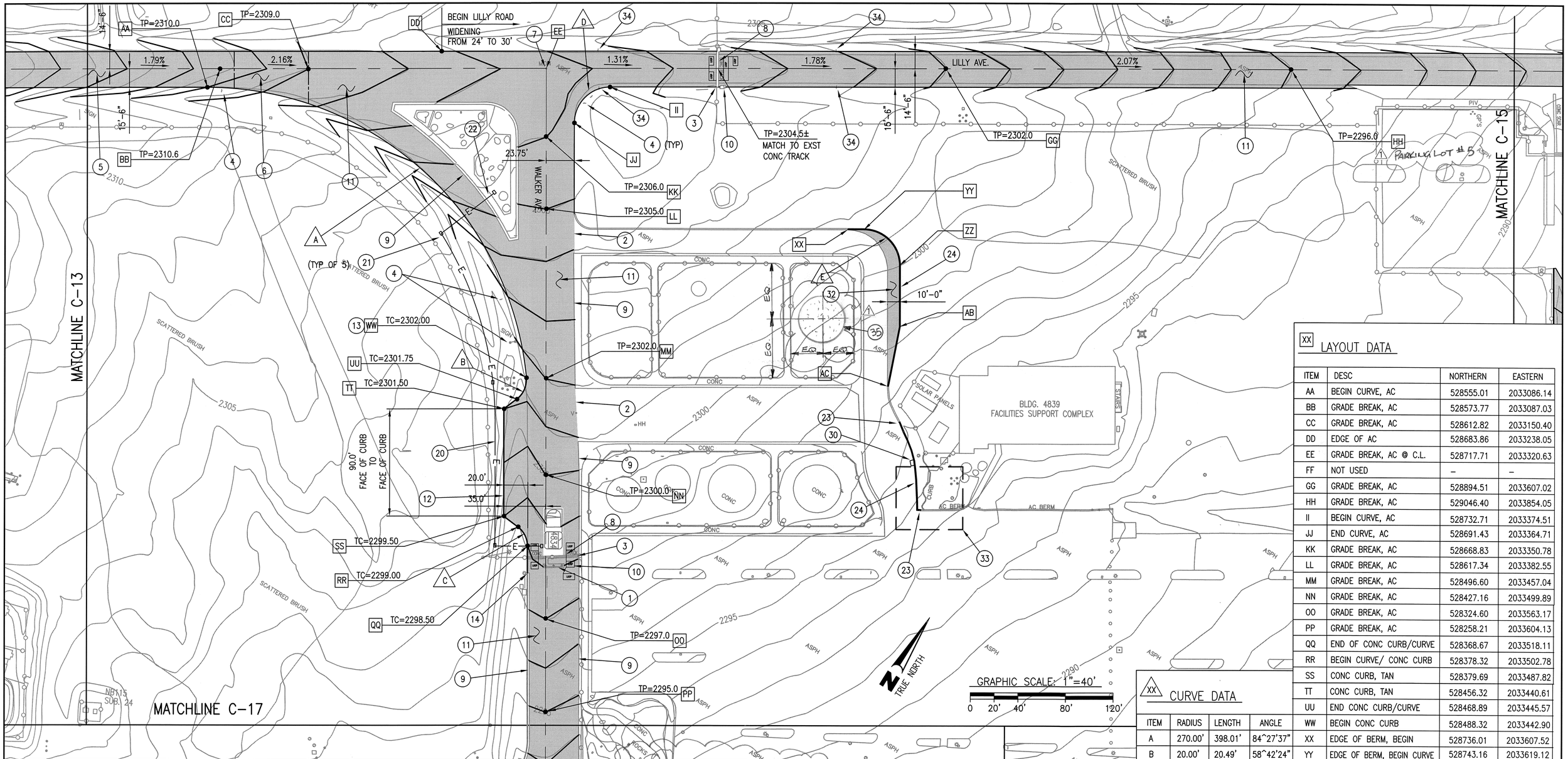

XX LAYOUT DATA

ITEM	DESC	NORTHERN	EASTERN
AA	BEGIN CURVE, AC	528555.01	2033086.14
BB	GRADE BREAK, AC	528573.77	2033087.03
CC	GRADE BREAK, AC	528612.82	2033150.40
DD	EDGE OF AC	528683.86	2033238.05
EE	GRADE BREAK, AC @ C.L.	528717.71	2033320.63
FF	NOT USED	–	–
GG	GRADE BREAK, AC	528894.51	2033607.02
HH	GRADE BREAK, AC	529046.40	2033854.05
II	BEGIN CURVE, AC	528732.71	2033374.51
JJ	END CURVE, AC	528691.43	2033364.71
KK	GRADE BREAK, AC	528668.83	2033350.78
LL	GRADE BREAK, AC	528617.34	2033382.55
MM	GRADE BREAK, AC	528496.60	2033457.04
NN	GRADE BREAK, AC	528427.16	2033499.89
OO	GRADE BREAK, AC	528324.60	2033563.17
PP	GRADE BREAK, AC	528258.21	2033604.13
QQ	END OF CONC CURB/CURVE	528368.67	2033518.11
RR	BEGIN CURVE/ CONC CURB	528378.32	2033502.78
SS	CONC CURB, TAN	528379.69	2033487.82
TT	CONC CURB, TAN	528456.32	2033440.61
UU	END CONC CURB/CURVE	528468.89	2033445.57
WW	BEGIN CONC CURB	528488.32	2033442.90
XX	EDGE OF BERM, BEGIN	528736.01	2033607.52
YY	EDGE OF BERM, BEGIN CURVE	528743.16	2033619.12
ZZ	EDGE OF BERM, END CURVE	528733.36	2033660.40
AB	EDGE OF BERM, DEFLECT	528689.79	2033687.25
AC	EDGE OF BERM, END	528642.03	2033705.06

XX CURVE DATA

ITEM	RADIUS	LENGTH	ANGLE
A	270.00'	398.01'	84^27'37"
B	20.00'	20.49'	58^42'24"
C	20.00'	18.53'	53^05'35"
D	30.00'	47.12'	90^
E	30.00'	47.12'	90^

XX NOTES:

1) MATCH NEW ASPHALT PAVEMENT TO EXST CONCRETE PAVEMENT WITH PAINT BINDER.
2) MATCH NEW ASPHALT PAVEMENT TO EXST ASPHALT PAVEMENT WITH PAINT BINDER.
3) EXISTING METAL GATE TO REMAIN.
4) EXISTING SIGN TO REMAIN. REMOVE, SALVAGE, AND REINSTALL IN SAME LOCATION, IF REQUIRED, FOR GRADING.
5) INSTALL NEW ASPHALT PAVEMENT AND RE-CONDITIONED SUBGRADE USING THE FDR METHOD, SEE DETAIL 2 / C-14 | C-29
6) TRANSITION BETWEEN RAISED PAVEMENT GRADE AND EXISTING PAVEMENT GRADE, SEE DETAIL 1 / C-14 | C-29
7) REMOVE, DISPOSE, AND REPLACE SURVEY MONUMENT, SEE DETAIL 2 / C-14 | C-31
8) MATCH NEW ASPHALT PAVEMENT TO EXST CONC FENCE TRACK WITH PAINT BINDER.
9) MATCH NEW ASPHALT PAVEMENT TO EXST CONC CURB OR GUTTER WITH PAINT BINDER.
10) PROTECT EXISTING AUTOMATIC GATE OPERATORS. REPLACE EXISTING PAVEMENT LOOP DETECTORS TO MATCH EXST.
11) INSTALL NEW ASPHALT PAVEMENT AND RE-CONDITIONED FDR BASE, SEE DETAIL 1 / C-14 | C-29
12) INSTALL NEW CONCRETE CURB, SEE DETAIL 5 / C-14 | C-29
13) END OF NEW CURB.
14) CONNECT NEW CURB TO EXISTING CURB WITH EXPANSION JOINT.
15-19) NOT USED
20) INSTALL NEW 2" ELECTRICAL CONDUIT WITH PULL ROPE, SEE DETAIL 3 / C-14 | C-31
21) INSTALL NEW PRE-CAST CONC ELECTRICAL HANDHOLE EVERY 150', AT BENDS, AND AT CONDUIT TERMINATION. SEE DETAIL 4 / C-14 | C-31
22) BORE CONDUIT UNDER EXISTING CONC SIDEWALK AND CMU PLANTER WALL.
23) CUT AND REMOVE EXST TAPERED END OF ASPHALT BERM. MATCH NEW BERM TO EXISTING BERM.
24) INSTALL NEW ASPHALT BERM TO MATCH EXISTING ALONG EDGE OF EXISTING OR NEW ASPHALT PVMT, SEE DETAIL 6 / C-14 | C-31
25) TO 29) NOT USED
30) REMOVE AND DISPOSE OF 5'X5' AREA OF ASPHALT PAVEMENT WHERE EXST PAVEMENT IS DAMAGED. INSTALL NEW ASPHALT PAVEMENT AND BASE, SEE DETAIL 3 / C-14 | C-29
31) NOT USED
32) INSTALL NEW ASPHALT PAVEMENT, SEE DETAIL 3 / C-14 | C-29
33) SEE SITE PLAN 4 ON C-27 FOR ENLARGED SITE PLAN.
34) REMOVE, SALVAGE, & RE-INSTALL SIGN 4' CLEAR OF NEW PAVEMENT EDGE.
35) CONSTRUCT 40'ø x 12" THICK CONCRETE AIRCRAFT DISPLAY PAD-SEE DETAIL 1 / C-14 | C-10

REGISTERED PROFESSIONAL ENGINEER JONATHAN E. BERTUCCHI NO. 60229 EXP. 6/30/12 CIVIL STATE OF CALIFORNIA

JBY #0622-10

JB YOUNG & ASSOCIATES
CONSULTANT ENGINEERS
11440 RIVERSIDE DRIVE, SUITE M
LAKESIDE, CA 92040

DATE	SYM	REVISION	BY	A'PD
3/4/11	1	STRIPING AND NOTE REVISIONS (GOV'T REVISIONS)		

NATIONAL AERONAUTICS AND SPACE ADMINISTRATION
DRYDEN FLIGHT RESEARCH CENTER
EDWARDS, CA

DRAWING TITLE
PAVEMENT REPAIR SITE PLAN #3

PROJECT TITLE
REPAIR FLIGHTLINE ACCESS ROADS & AIRCRAFT RAMPS-DFRC, PHASE 1 OF 2
100% FINAL DESIGN

APPROVALS	DATE
Chief, Facilities Engineering & Asset Mgmt. Office	3-7-11
Project Manager	1-4-11
Facility Manager	1/5/11
Project Requestor/Customer	1/4/11
Safety, Health & Environmental	1/4/11
Office of Protocol Services	1/4/11
Office of the CIO	1/5/11

DATE STRTD	7-29-09	DATE PRNTD	12-7-10
DRAWN BY	JFB		EDM-1706
SCALE	GRAPHIC	TRADE SH. No.	
FILE NAME		C-14	SHEET No. 21 of 43

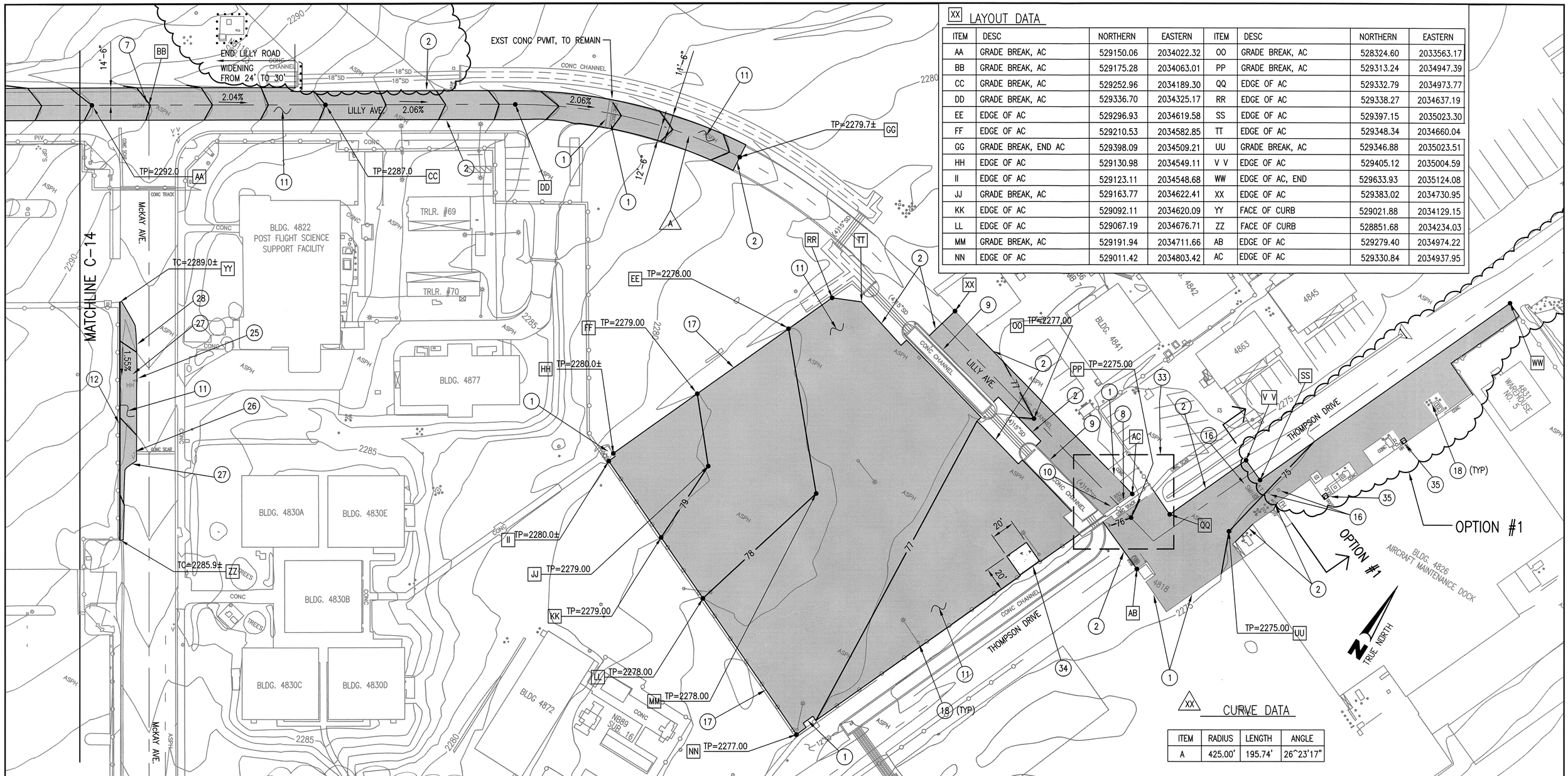

XX LAYOUT DATA

ITEM	DESC	NORTHERN	EASTERN	ITEM	DESC	NORTHERN	EASTERN
AA	GRADE BREAK, AC	529150.06	2034022.32	OO	GRADE BREAK, AC	528324.60	2033563.17
BB	GRADE BREAK, AC	529175.28	2034063.01	PP	GRADE BREAK, AC	529313.24	2034947.39
CC	GRADE BREAK, AC	529252.96	2034189.30	QQ	EDGE OF AC	529332.79	2034973.77
DD	GRADE BREAK, AC	529336.70	2034325.17	RR	EDGE OF AC	529338.27	2034637.19
EE	EDGE OF AC	529296.93	2034619.58	SS	EDGE OF AC	529397.15	2035023.30
FF	EDGE OF AC	529210.53	2034582.85	TT	EDGE OF AC	529348.34	2034660.04
GG	GRADE BREAK, END AC	529398.09	2034509.21	UU	GRADE BREAK, AC	529346.88	2035023.51
HH	EDGE OF AC	529130.98	2034549.11	V V	EDGE OF AC	529405.12	2035004.59
II	EDGE OF AC	529123.11	2034548.68	WW	EDGE OF AC, END	529633.93	2035124.08
JJ	GRADE BREAK, AC	529163.77	2034622.41	XX	EDGE OF AC	529383.02	2034730.95
KK	EDGE OF AC	529092.11	2034620.09	YY	FACE OF CURB	529021.88	2034129.15
LL	EDGE OF AC	529067.19	2034676.71	ZZ	FACE OF CURB	528851.68	2034234.03
MM	GRADE BREAK, AC	529191.94	2034711.66	AB	EDGE OF AC	529279.40	2034974.22
NN	EDGE OF AC	529011.42	2034803.42	AC	EDGE OF AC	529330.84	2034937.95

XX CURVE DATA

ITEM	RADIUS	LENGTH	ANGLE
A	425.00'	195.74'	26^23'17"

XX NOTES:

1) MATCH NEW ASPHALT PAVEMENT TO EXST CONCRETE PAVEMENT WITH PAINT BINDER.
2) MATCH NEW ASPHALT PAVEMENT TO EXST ASPHALT PAVEMENT WITH PAINT BINDER.
3) NOT USED.
4) NOT USED.
5) NOT USED.
6) NOT USED.
7) REMOVE, DISPOSE, AND REPLACE SURVEY MONUMENT, SEE DETAIL 2 / C-15 | C-31
8) MATCH NEW ASPHALT PAVEMENT TO EXST CONC FENCE TRACK WITH PAINT BINDER.
9) MATCH NEW ASPHALT PAVEMENT TO EXST CONC CURB OR GUTTER WITH PAINT BINDER.
10) PROTECT EXISTING AUTOMATIC GATE OPERATORS. REPLACE EXISTING PAVEMENT LOOP DETECTORS TO MATCH EXST.
11) INSTALL NEW ASPHALT PAVEMENT AND RE-CONDITIONED FDR BASE, SEE DETAIL 1 / C-15 | C-29
12) INSTALL NEW CONCRETE CURB & GUTTER, SEE DETAIL 7 / C-15 | C-34
13) TO 15) NOT USED
16) PROTECT EXISTING VALVE WELL OR MANHOLE. REPLACE CONC COLLAR, SEE DETAIL 1 / C-15 | C-32
17) MATCH NEW ASPHALT PAVEMENT TO EXISTING CHAIN LINK FENCING. MAX GAP BETWEEN NEW AC AND BOTTOM OF MESH = 2".
18) MATCH NEW ASPHALT PAVEMENT TO EXISTING LP, GP, PIV, FH, OR OTHER EXST OBJECT.
19) TO 24) NOT USED
25) REMOVE & DISPOSE OF GAS VALVE WELL & CONC COLLAR. REPLACE WITH TRAFFIC RATED VALVE WELL & CONC COLLAR, SEE DETAIL 2 / C-15 | C-32
26) REMOVE AND DISPOSE OF CONC COLLAR, RAISE VALVE WELL TO FINISHED GRADE, INSTALL NEW CONCRETE COLLAR, SEE DETAIL 1 / C-15 | C-32
27) SAWCUT, REMOVE & DISPOSE OF 6" STRIP ALONG EDGE OF EXST ASPHALT PAVEMENT TO PROVIDE A CLEAN EDGE TO MATCH NEW PAVEMENT.
28) REMOVE AND DISPOSE OF SIGN AND POST.
29) TO 32) NOT USED.
33) SEE SITE PLAN 1 ON C-28 FOR ENLARGED SITE PLAN.
34) INSTALL NEW CONCRETE PAVEMENT FOR MOTORCYCLE PARKING, SEE DETAIL 3 / C-15 | C-32. SEE STRIPING PLAN FOR LOCATION.
35) SAWCUT, REMOVE, & DISPOSE OF ASPHALT PAVEMENT, SEE DETAIL 4 / C-15 | C-32. INSTALL NEW 4'X4' CONCRETE DOOR LANDING PAD. CENTER OF PAD = CENTER OF DOOR.

GRAPHIC SCALE: 1"=40'
0 20' 40' 80' 120'

REGISTERED PROFESSIONAL ENGINEER JOHN MANLEY BERRY CHI NO. 60229 EXP. 6/30/12 CIVIL STATE OF CALIFORNIA

JBY #0622-10

JB YOUNG & ASSOCIATES
CONSULTANT ENGINEERS
11440 RIVERSIDE DRIVE, SUITE M
LAKESIDE, CA 92040

DATE	SYM	REVISION	BY	A'PD
3/4/11	1	STRIPING AND NOTE REVISIONS (GOV'T REVISIONS)		

NATIONAL AERONAUTICS AND SPACE ADMINISTRATION
DRYDEN FLIGHT RESEARCH CENTER
EDWARDS, CA

DRAWING TITLE
PAVEMENT REPAIR SITE PLAN #4

PROJECT TITLE
REPAIR FLIGHTLINE ACCESS ROADS & AIRCRAFT RAMPS-DFRC, PHASE 1 OF 2
100% FINAL DESIGN

APPROVALS	DATE
Chief, Facilities Engineering & Asset Mgmt. Office	3-7-11
Project Manager	1-4-11
Facility Manager	1/5/11
Project Requestor/Customer	1/4/11
Safety, Health & Environmental	1/6/11
Office of Protocol & Science	1/4/11
Office of the CIO	1/5/11

DATE STRTD	7-29-09	DATE PRNTD	12-7-10
DRAWN BY	JFB		EDM-1706
SCALE	GRAPHIC	TRADE SH. No.	C-15
FILE NAME		SHEET No.	22 of 43

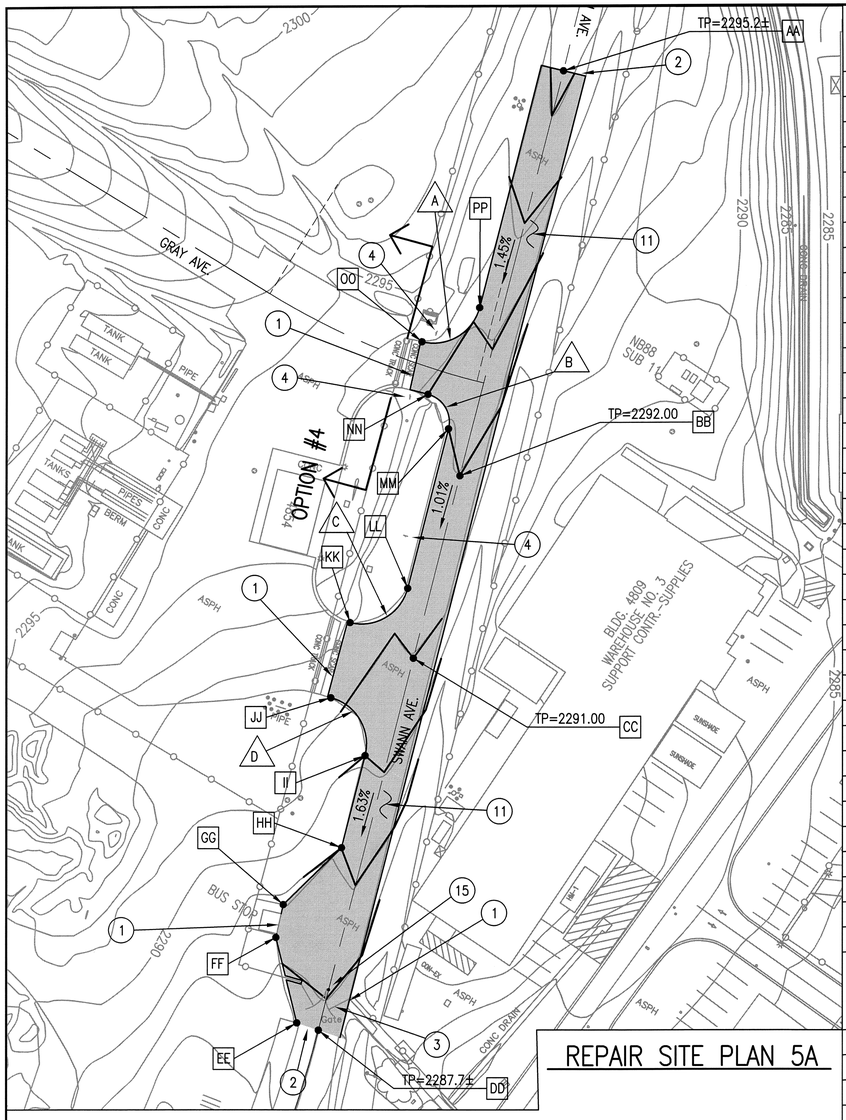

REPAIR SITE PLAN 5A

XX LAYOUT DATA

REPAIR SITE PLAN 5A

ITEM	DESC	NORTHERN	EASTERN
AA	GRADE BREAK, AC	526126.44	2033412.23
BB	GRADE BREAK, AC	526915.82	2033477.63
CC	GRADE BREAK, AC	526821.20	2033507.16
DD	GRADE BREAK, AC	526628.38	2033567.34
EE	526625.67	526625.67	2033555.61
FF	EDGE OF AC	526658.18	2033522.65
GG	EDGE OF AC	526674.97	2033516.83
HH	EDGE OF AC	526716.37	2033527.18
II	EDGE OF AC, END CURVE	526764.33	2033512.34
JJ	EDGE OF AC, BEGIN CURVE	526780.03	2033478.91
KK	EDGE OF AC, END CURVE	526819.78	2033468.84
LL	EDGE OF AC, BEGIN CURVE	526851.09	2033485.26
MM	EDGE OF AC, END CURVE	526933.74	2033459.47
NN	EDGE OF AC, BEGIN CURVE	526943.69	2033441.02
OO	EDGE OF AC, END CURVE	526965.51	2033423.36
PP	EDGE OF AC, BEGIN CURVE	526996.82	2033439.78

REPAIR SITE PLAN 5B

AA	GRADE BREAK, AC	528397.62	2034043.61
BB	GRADE BREAK, AC	528621.72	2034396.40
CC	GRADE BREAK, AC	528486.27	2034206.14
DD	GRADE BREAK, AC	528581.38	2034380.50
EE	GRADE BREAK, AC	528601.26	2034416.94

REPAIR SITE PLAN 5C

AA	GRADE BREAK, AC	527614.69	2034411.36
BB	GRADE BREAK, AC	527623.09	2034438.77
CC	GRADE BREAK, AC	527733.95	2034352.75
DD	GRADE BREAK, AC	527660.18	2034443.86
EE	GRADE BREAK, AC	527667.96	2034494.37
FF	GRADE BREAK, AC	527935.59	2034593.59
GG	GRADE BREAK, AC	527928.47	2034606.04
HH	GRADE BREAK, AC	527916.38	2034612.93
II	GRADE BREAK, AC	527915.05	2034600.35
JJ	GRADE BREAK, AC	527918.93	2034586.58
KK	GRADE BREAK, AC	527883.95	2034612.77

XX CURVE DATA

ITEM	RADIUS	LENGTH	ANGLE
A	25.00'	39.27'	90^
B	15.00'	23.56'	90^
C	25.00'	39.27'	90^
D	25.00'	39.27'	90^

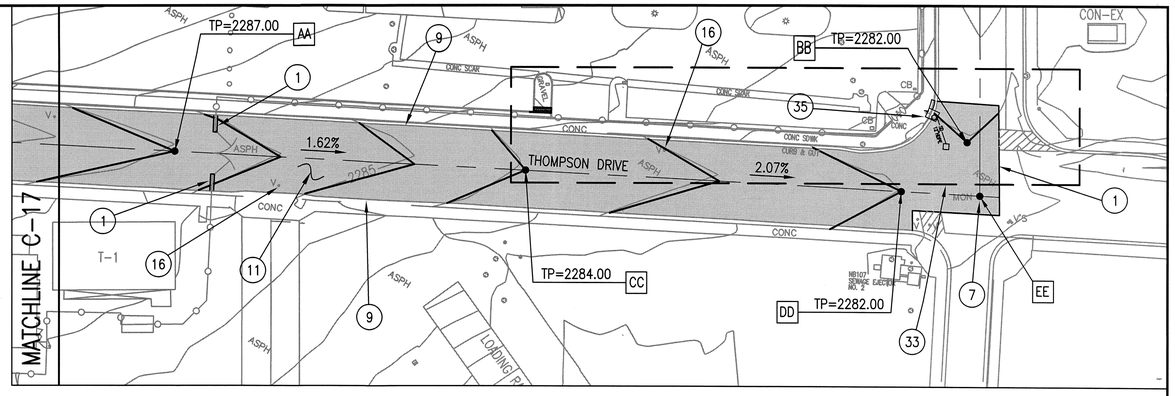

REPAIR SITE PLAN 5B

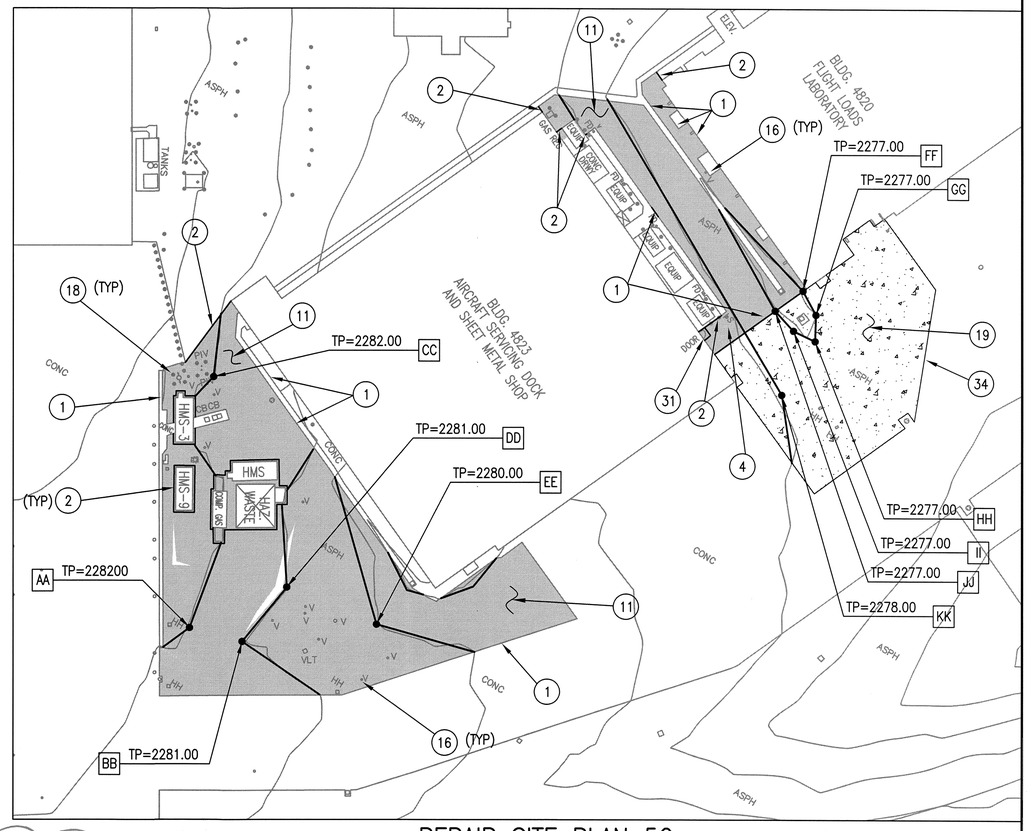

REPAIR SITE PLAN 5C

XX NOTES:

1) MATCH NEW ASPHALT PAVEMENT TO EXST OR NEW CONCRETE PAVEMENT WITH PAINT BINDER.
2) MATCH NEW ASPHALT PAVEMENT TO EXST ASPHALT PAVEMENT WITH PAINT BINDER.
3) EXISTING METAL GATE TO REMAIN.
4) EXISTING SIGN TO REMAIN. REMOVE, SALVAGE, AND REINSTALL IN SAME LOCATION, IF REQUIRED, FOR GRADING.
5) NOT USED
6) NOT USED
7) REMOVE, DISPOSE, AND REPLACE SURVEY MONUMENT, SEE DETAIL 2 / C-16 | C-31
8) NOT USED
9) MATCH NEW ASPHALT PAVEMENT TO EXST CONC CURB OR GUTTER WITH PAINT BINDER.
10) NOT USED
11) INSTALL NEW ASPHALT PAVEMENT AND RE-CONDITIONED FDR BASE, SEE DETAIL 1 / C-16 | C-29
12) NOT USED
13) NOT USED
14) NOT USED
15) INSTALL METAL PLUNGER ROD CUP IN 1 CUBIC FOOT OF CONCRETE IN GATE CLOSED POSITION.
16) PROTECT EXISTING VALVE WELL OR MH. REPLACE CONC COLLAR, SEE DETAIL 1 / C-16 | C-32
18) MATCH NEW ASPHALT PAVEMENT TO EXISTING LP, GP, PIV, FH, OR OTHER EXST OBJECT.
19) INSTALL NEW 8" THICK CONCRETE PAVEMENT, SEE DETAIL 3 / C-16 | C-32

MAINTAIN EXISTING GRADES AND TOP OF PAVEMENT SLOPES. FOR JOINT PLAN SEE PLAN 1 / C-16 | C-35

20) TO 30) NOT USED
31) INSTALL NEW 5' WIDE CONCRETE PAD AT EXISTING BUILDING DOOR. ALIGN CENTER OF PAD WITH CENTER OF DOOR, SEE DETAIL 4 / C-16 | C-32
32) NOT USED.
33) SEE SITE PLAN 2 ON C-28 FOR ENLARGED SITE PLAN.
34) INSTALL NEW DOWELED CONNECTION BETWEEN NEW AND EXISTING CONCRETE PAVEMENT, SEE PLAN 4 / C-16 | C-35
35) GRADE NEW PAVED ROAD SO STORM WATER FLOWING ON THE WEST SIDE OF MCKAY AVE IS DIRECTED INTO THE NEW CURB INLET CATCH BASIN.

TRUE NORTH

GRAPHIC SCALE: 1"=40'

0 20' 40' 80' 120'

SEE CIVIL PVMT & GRADING LEGEND SHEET C-12

REGISTERED PROFESSIONAL ENGINEER JONATHAN F. BERGMANN NO. 60229 EXP. 6/30/12 CIVIL STATE OF CALIFORNIA

JBY #0622-10

JB YOUNG & ASSOCIATES
CONSULTANT ENGINEERS
11440 RIVERSIDE DRIVE, SUITE M
LAKESIDE, CA 92040

DATE	SYM	REVISION	BY	A'PD
3/4/11	1	STRIPING AND NOTE REVISIONS (GOV'T REVISIONS)		

NATIONAL AERONAUTICS AND SPACE ADMINISTRATION
DRYDEN FLIGHT RESEARCH CENTER
EDWARDS, CA

DRAWING TITLE
PAVEMENT REPAIR SITE PLAN #5

PROJECT TITLE
REPAIR FLIGHTLINE ACCESS ROADS & AIRCRAFT RAMPS-DFRC, PHASE 1 OF 2
100% FINAL DESIGN

APPROVALS	DATE
Chief, Facilities Engineering & Asset Mgmt. Office	3-7-11
Project Manager	1-4-11
Facility Manager	1/5/11
Project Requestor/Customer	1/4/11
Safety, Health, & Environmental	1/6/11
Office of Protection Services	1/4/11
Office of 1st DO	1/5/11

DATE STRTD	7-29-09	DATE PRNTD	12-7-10
DRAWN BY	JFB		EDM-1706
SCALE	GRAPHIC	TRADE SH. No.	C-16
FILE NAME		SHEET No.	23 of 43

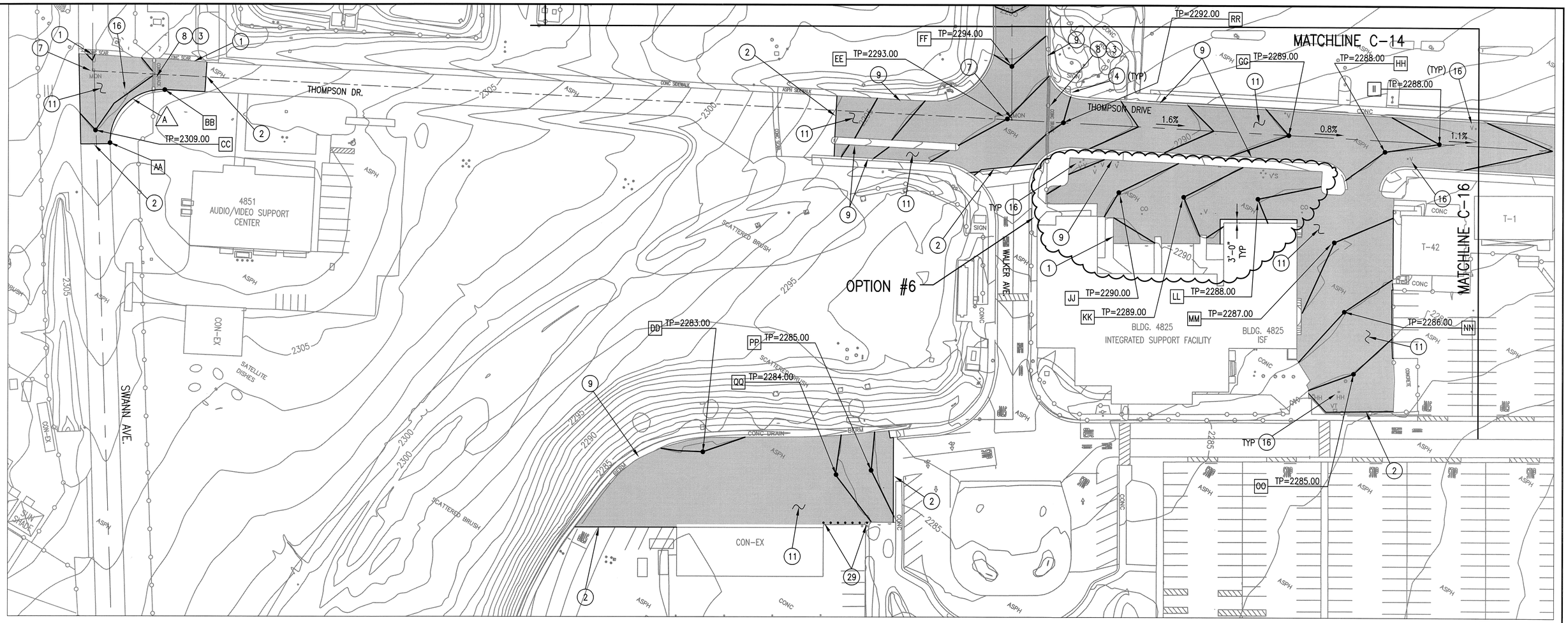

NOTES:

1) MATCH NEW ASPHALT PAVEMENT TO EXST CONCRETE PAVEMENT WITH PAINT BINDER.
2) MATCH NEW ASPHALT PAVEMENT TO EXST ASPHALT PAVEMENT WITH PAINT BINDER.
3) EXISTING METAL GATE TO REMAIN.
4) EXISTING SIGN TO REMAIN. REMOVE, SALVAGE, AND REINSTALL IN SAME LOCATION, IF REQUIRED, FOR GRADING.
5) NOT USED
6) NOT USED
7) REMOVE, DISPOSE, AND REPLACE SURVEY MONUMENT, SEE DETAIL 2 / C-17 | C-31
8) MATCH NEW ASPHALT PAVEMENT TO EXST CONC FENCE TRACK WITH PAINT BINDER.
9) MATCH NEW ASPHALT PAVEMENT TO EXST CONC CURB OR GUTTER WITH PAINT BINDER.
10) NOT USED
11) INSTALL NEW ASPHALT PAVEMENT AND RE-CONDITIONED FDR BASE, SEE DETAIL 1 / C-17 | C-29
12) TO 15) NOT USED
16) PROTECT EXISTING VALVE WELL OR MH. REPLACE CONC COLLAR, SEE DETAIL 1 / C-17 | C-32
17) TO 28) NOT USED
29) INSTALL 4"ø GUARD POSTS AT 6' O/C, SEE DETAIL 2 / C-17 | C-8

INSTALL HEAVY DUTY METAL CHAIN IN BETWEEN GUARD POSTS.
CONNECT CHAIN TO NEW EYE BOLT WELDED TO EACH GUARD POST 3'-9" ABOVE GRADE.

LAYOUT DATA

ITEM	DESC	NORTHERN	EASTERN
AA	EDGE OF AC, BEGIN CURVE	527773.99	2033026.18
BB	EDGE OF AC, END CURVE	527835.83	2033041.15
CC	GRADE BREAK, AC	527777.24	2033010.04
DD	GRADE BREAK, AC	527815.39	2033577.66
EE	GRADE BREAK, AC	528181.96	2033646.88
FF	GRADE BREAK, AC	528220.83	2033627.20
GG	GRADE BREAK, AC	528293.05	2033851.89
HH	GRADE BREAK, AC	528322.84	2033926.66
II	GRADE BREAK, AC	528352.75	2033961.34
JJ	GRADE BREAK, AC	528179.59	2033757.84
KK	GRADE BREAK, AC	528203.77	2033804.93
LL	GRADE BREAK, AC	528234.77	2033857.94
MM	GRADE BREAK, AC	528237.54	2033930.59
NN	GRADE BREAK, AC	528193.01	2033967.82
OO	GRADE BREAK, AC	528153.30	2034001.40
PP	GRADE BREAK, AC	527875.62	2033704.20
QQ	GRADE BREAK, AC	527857.04	2033680.90
RR	GRADE BREAK, AC	528203.55	2033687.83

CURVE DATA

ITEM	RADIUS	LENGTH	ANGLE
A	43.00'	70.76'	94^
–	–	–	–
–	–	–	–
–	–	–	–

SEE CIVIL PVMT & GRADING LEGEND SHEET C-12

TRUE NORTH

GRAPHIC SCALE: 1"=40'
0 20' 40' 80' 120'

REGISTERED PROFESSIONAL ENGINEER
JONATHAN F. BERNARDICHI
NO. 60229
EXP. 6/30/12
CIVIL
STATE OF CALIFORNIA

JBY #0622-10

JB YOUNG & ASSOCIATES
CONSULTANT ENGINEERS
11440 RIVERSIDE DRIVE, SUITE M
LAKESIDE, CA 92040

DATE	SYM	REVISION	BY	A'PD
3/4/11	1	STRIPING AND NOTE REVISIONS (GOV'T REVISIONS)		

NATIONAL AERONAUTICS AND SPACE ADMINISTRATION
DRYDEN FLIGHT RESEARCH CENTER
EDWARDS, CA

DRAWING TITLE
PAVEMENT REPAIR SITE PLAN #6

PROJECT TITLE
REPAIR FLIGHTLINE ACCESS ROADS & AIRCRAFT RAMPS-DFRC, PHASE 1 OF 2
100% FINAL DESIGN

APPROVALS	DATE
Chief, Facilities Engineering & Asset Mgmt. Office	3-7-11
Project Manager	1-4-11
Facility Manager	1/5/11
Project Requestor/Customer	1/4/11
Safety, Health & Environmental	1/6/11
Office of Protective Services	1/4/11
Office of Director	1/5/11

DATE STRTD	7-29-09	DATE PRNTD	12-7-10
DRAWN BY	JFB		EDM-1706
SCALE	GRAPHIC	TRADE SH. No.	C-17
FILE NAME		SHEET No.	24 of 43

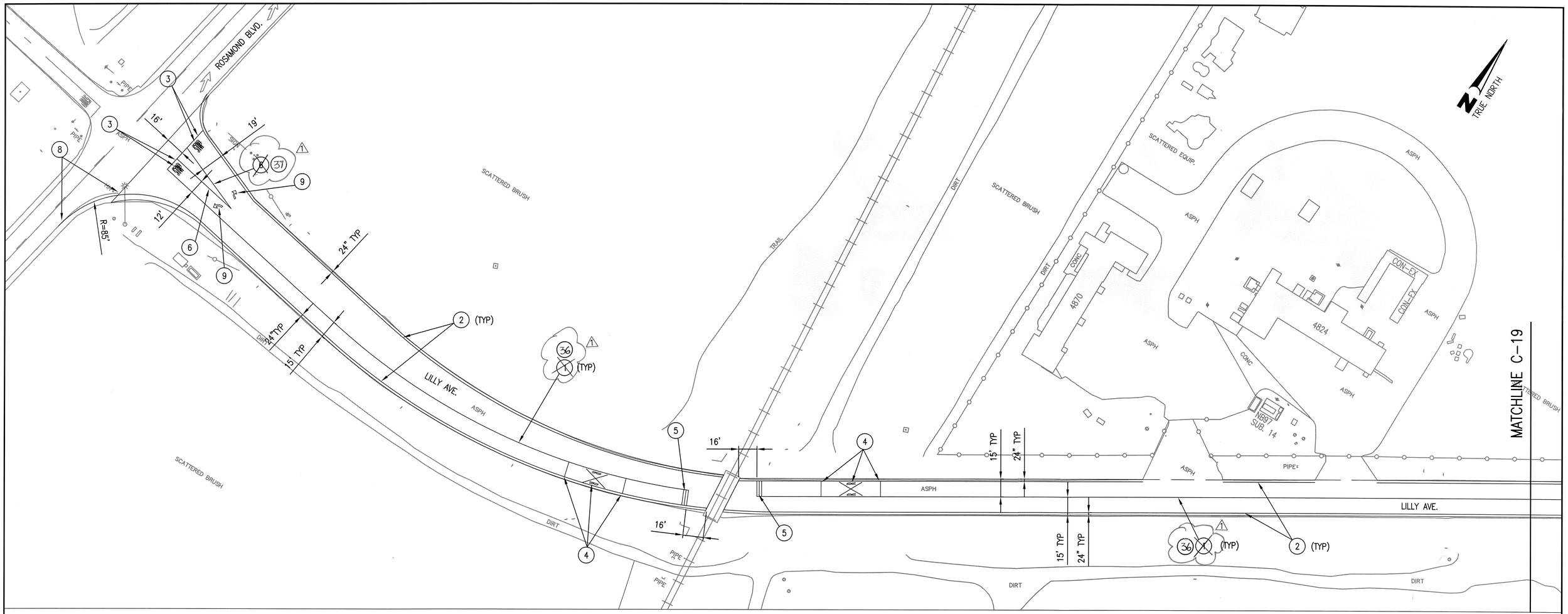

STRIPING PLAN 1A

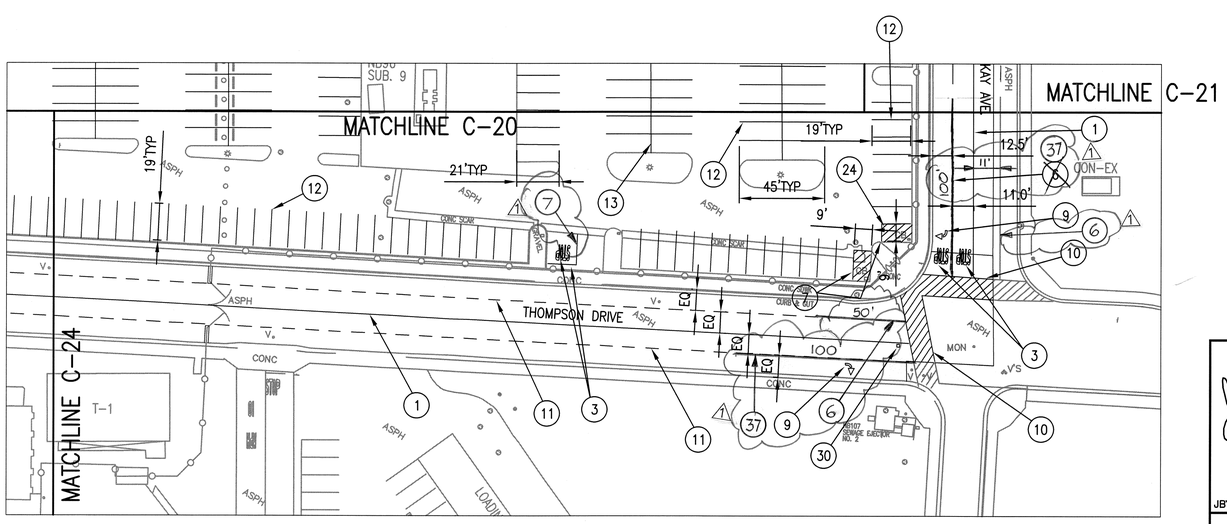

STRIPING PLAN 1B

(XX) NOTES:

- SEE DRAWINGS C-26 FOR BUBBLE NOTE DESCRIPTIONS.

GRAPHIC SCALE: 1"=40'

0 20' 40' 80' 120'

REGISTERED PROFESSIONAL ENGINEER JONATHAN E. BERLINGHERI NO. 60229 EXP. 6/30/12 CIVIL STATE OF CALIFORNIA

JBY #0622-10

JB YOUNG & ASSOCIATES
CONSULTANT ENGINEERS
11440 RIVERSIDE DRIVE, SUITE M
LAKESIDE, CA 92040

DATE	SYM	REVISION	BY	A'PD
3/4/11	1	STRIPING AND NOTE REVISIONS (GOV'T REVISIONS)		

NATIONAL AERONAUTICS AND SPACE ADMINISTRATION
DRYDEN FLIGHT RESEARCH CENTER
EDWARDS, CA

DRAWING TITLE
STRIPING PLAN #1

PROJECT TITLE
REPAIR FLIGHTLINE ACCESS ROADS & AIRCRAFT RAMPS-DFRC, PHASE 1 OF 2
100% FINAL DESIGN

APPROVALS	DATE
Chief, Facilities Engineering & Asset Mgmt. Office	7-7-11
Project Manager	1-4-11
Facility Manager	1/5/11
Project Requestor/Customer	1/4/11
Safety, Health & Environmental	1/6/11
Office of Protection Services	1/4/11
Office of the CIO	1/5/11

DATE STRTD	7-29-09	DATE PRNTD	12-7-10
DRAWN BY	JFB		EDM-1706
SCALE	GRAPHIC	TRADE SH. No.	C-18
FILE NAME		SHEET No.	25 of 43

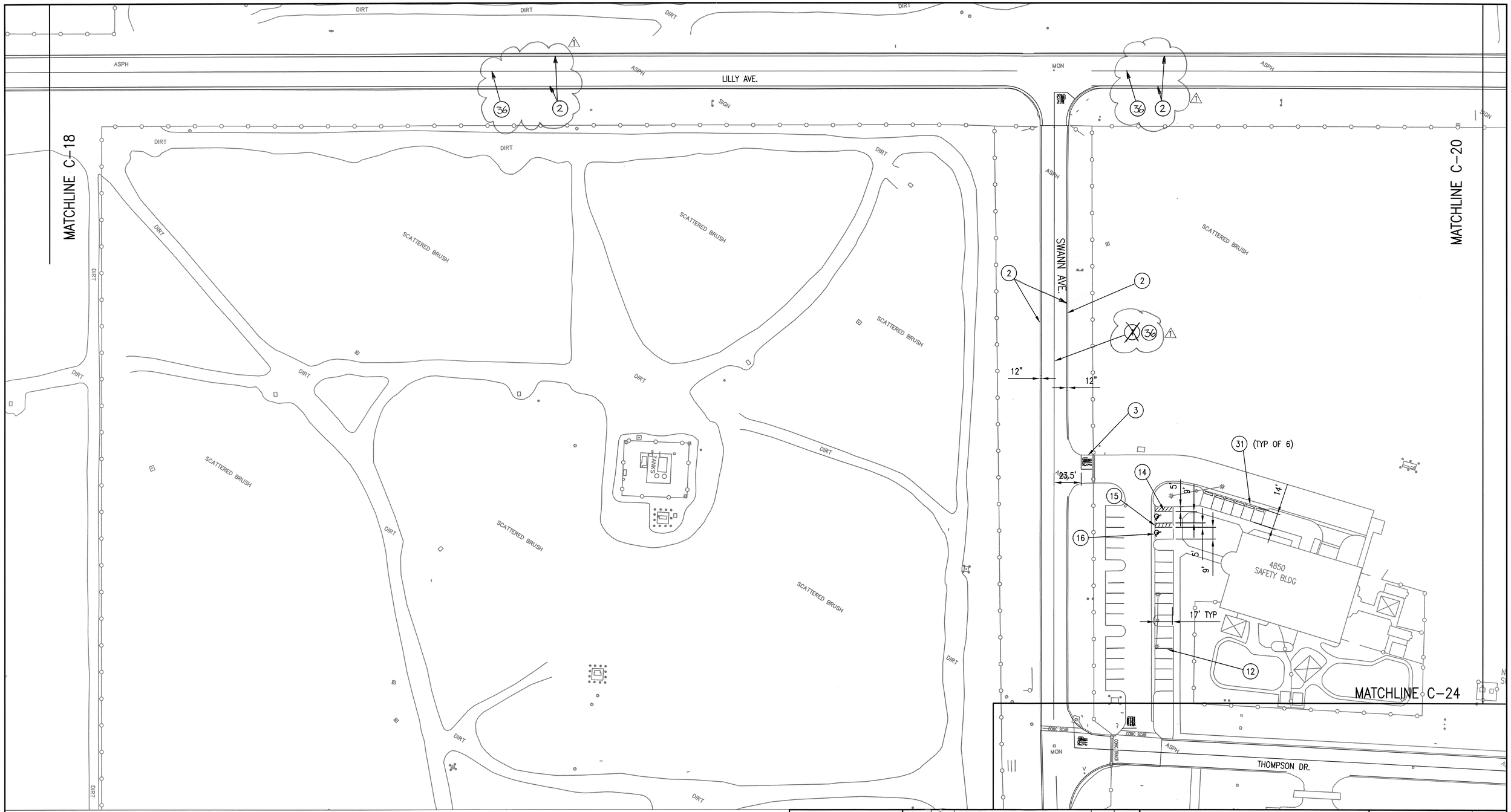

(XX) NOTES:

- SEE DRAWINGS C-26 FOR BUBBLE NOTE DESCRIPTIONS.

GRAPHIC SCALE: 1"=40'

0 20' 40' 80' 120'

TRUE NORTH

REGISTERED PROFESSIONAL ENGINEER JOSHUA L. BERTRUCH NO. 60229 EXP. 6/30/12 CIVIL STATE OF CALIFORNIA

JBY #0622-10

JB YOUNG & ASSOCIATES
CONSULTANT ENGINEERS
11440 RIVERSIDE DRIVE, SUITE M
LAKESIDE, CA 92040

DATE	SYM	REVISION	BY	A'PD
3/14/11	1	STRIPING AND NOTE REVISIONS (GOV'T REVISIONS)		

NATIONAL AERONAUTICS AND SPACE ADMINISTRATION
DRYDEN FLIGHT RESEARCH CENTER
EDWARDS, CA

DRAWING TITLE
STRIPING PLAN #2

PROJECT TITLE
REPAIR FLIGHTLINE ACCESS ROADS & AIRCRAFT RAMPS-DFRC, PHASE 1 OF 2
100% FINAL DESIGN

APPROVALS	DATE
Chief, Facilities Engineering & Asset Mgmt. Office	3-7-11
Project Manager	1-4-11
Facility Manager	1/5/11
Project Requestor/Customer	1/4/11
Safety, Health, & Environmental	1/6/11
Office of Protective Services	1/4/11
Office of the CIO	1/5/11

DATE STRTD	7-29-09	DATE PRNTD	12-7-10
DRAWN BY	JFB		EDM-1706
SCALE	GRAPHIC	TRADE SH. No. C-19	
FILE NAME		SHEET No. 26 of 43	

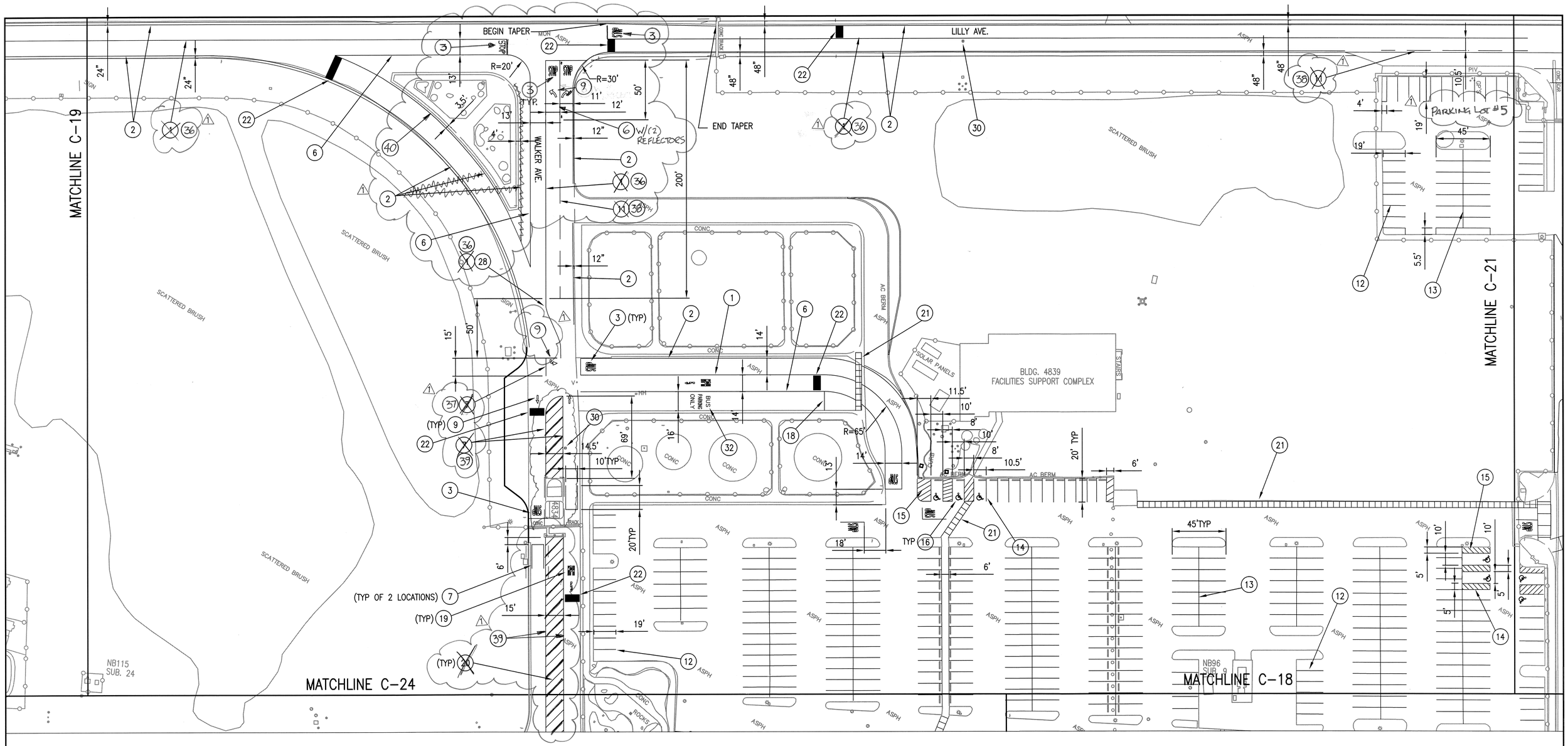

(XX) NOTES:

- SEE DRAWINGS C-26 FOR BUBBLE NOTE DESCRIPTIONS.

TRUE NORTH

GRAPHIC SCALE: 1"=40'

0 20' 40' 80' 120'

REGISTERED PROFESSIONAL ENGINEER
JONATHAN E. BERCH
NO. 60229
EXP. 6/30/12
CIVIL
STATE OF CALIFORNIA

JBY #0622-10

JB YOUNG & ASSOCIATES
CONSULTANT ENGINEERS
11440 RIVERSIDE DRIVE, SUITE M
LAKESIDE, CA 92040

DATE	SYM	REVISION	BY	A'PD
3/4/11	1	STRIPING AND NOTE REVISIONS (GOV'T REVISIONS)		

NATIONAL AERONAUTICS AND SPACE ADMINISTRATION
DRYDEN FLIGHT RESEARCH CENTER
EDWARDS, CA

DRAWING TITLE
STRIPING PLAN #3

PROJECT TITLE
REPAIR FLIGHTLINE ACCESS ROADS & AIRCRAFT RAMPS-DFRC, PHASE 1 OF 2
100% FINAL DESIGN

APPROVALS	DATE
Chief, Facilities Engineering & Asset Mgmt. Office	3-7-11
Project Manager	1-4-11
Facility Manager	1/5/11
Project Requestor/Customer	1/4/11
Safety, Health & Environmental	1/6/11
Office of Protective Services	1/4/11
Office of the CIO	1/5/11

DATE STRTD	7-29-09	DATE PRNTD	12-7-10
DRAWN BY	JFB		EDM-1706
SCALE	GRAPHIC	TRADE SH. No.	C-20
FILE NAME		SHEET No.	27 of 43

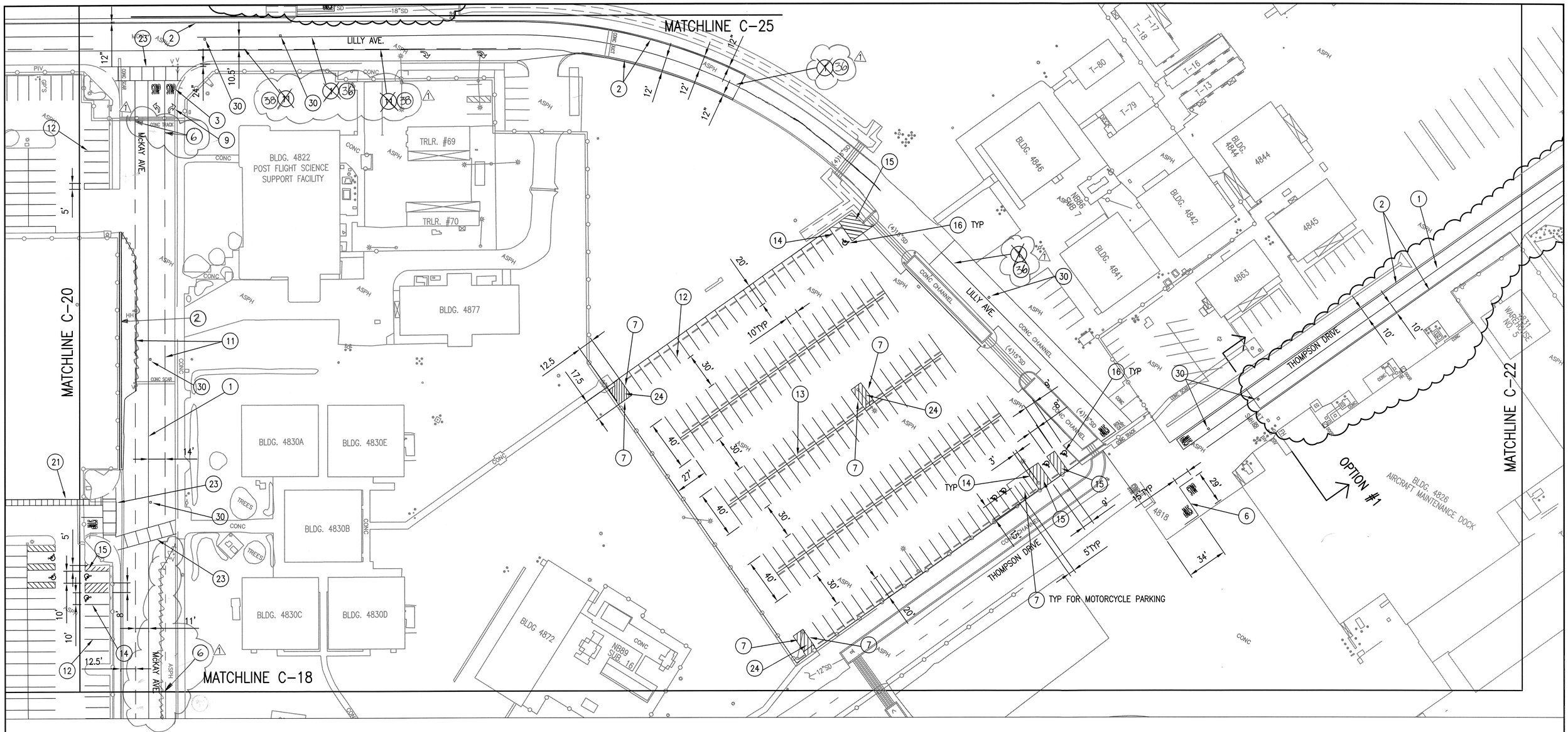

(XX) NOTES:

- SEE DRAWINGS C-26 FOR BUBBLE NOTE DESCRIPTIONS.

GRAPHIC SCALE: 1"=40'

0 20' 40' 80' 120'

TRUE NORTH

REGISTERED PROFESSIONAL ENGINEER
JONATHAN BERNSTEIN
NO. 60229
EXP. 6/30/12
CIVIL
STATE OF CALIFORNIA

JBY #0622-10

JB YOUNG & ASSOCIATES
CONSULTANT ENGINEERS
11440 RIVERSIDE DRIVE, SUITE M
LAKESIDE, CA 92040

DATE	SYM	REVISION	BY	A'PD
3/4/11	1	STRIPING AND NOTE REVISIONS (GOV'T REVISIONS)		

NATIONAL AERONAUTICS AND SPACE ADMINISTRATION
DRYDEN FLIGHT RESEARCH CENTER
EDWARDS, CA

DRAWING TITLE
STRIPING PLAN #4

PROJECT TITLE
REPAIR FLIGHTLINE ACCESS ROADS & AIRCRAFT RAMPS-DFRC, PHASE 1 OF 2
100% FINAL DESIGN

APPROVALS	DATE
Chief, Facilities Engineering & Asset Mgmt. Office	3-7-11
Project Manager	1-4-11
Facility Manager	1/5/11
Project Requestor/Customer	1/4/11
Safety, Health & Environmental	1/6/11
Office of Protective Services	1/4/11
Office of the CIO	1/5/11

DATE STRTD	7-29-09	DATE PRNTD	12-7-10
DRAWN BY	JFB		EDM-1706
SCALE	GRAPHIC	TRADE SH. No. C-21	
FILE NAME		SHEET No. 28 of 43	

MATCHLINE SEE BELOW

MATCHLINE C-21

4833 SHUTTLE HANGAR

4879 SUN SHADE CON-DX

4837 WAREHOUSE NO. 8

4837

CON-D2

CON-S2

CON-S3

4853 FIRE PROTECTION PUMP STATION NO. 1

PIPE

THOMPSON DRIVE

10'

10'

OPTION #1

OPTION #1

1

2

30

CONC

ASPH

BERM

CONC DRAIN

7-74 SUN SHADE

4859 SHUTTLE LABORATORY FACILITY

4865 SUB. 5

4864 TURN-AROUND BLDG.

LS-2

TANK

conc. lock

GRP

4871

SIGN

25

MATCHLINE SEE ABOVE

(XX) NOTES:

- SEE DRAWINGS C-26 FOR BUBBLE NOTE DESCRIPTIONS.

GRAPHIC SCALE: 1"=40'

0 20' 40' 80' 120'

TRUE NORTH

REGISTERED PROFESSIONAL ENGINEER
JONATHAN BERNSTEIN
NO. 60229
EXP. 6/30/12
CIVIL
STATE OF CALIFORNIA

JBY #0622-10

JB YOUNG & ASSOCIATES
CONSULTANT ENGINEERS
11440 RIVERSIDE DRIVE, SUITE M
LAKESIDE, CA 92040

DATE	SYM	REVISION	BY	A'PD

NATIONAL AERONAUTICS AND SPACE ADMINISTRATION
DRYDEN FLIGHT RESEARCH CENTER
EDWARDS, CA

DRAWING TITLE
STRIPING PLAN #5

PROJECT TITLE
REPAIR FLIGHTLINE ACCESS ROADS & AIRCRAFT RAMPS-DFRC, PHASE 1 OF 2
100% FINAL DESIGN

APPROVALS	DATE
Chief, Facilities Engineering & Asset Mgmt. Office	3-7-11
Project Manager	1-4-11
Facility Manager	1/5/11
Project Requestor/Customer	1/4/11
Safety, Health & Environmental	1/6/11
Office of Project Services	1/9/11
Office of the CIO	1/5/11

DATE STRTD	7-29-09	DATE PRNTD	12-7-10
DRAWN BY	JFB		EDM-1706
SCALE	GRAPHIC	TRADE SH. No.	C-22
FILE NAME		SHEET No.	29 of 43

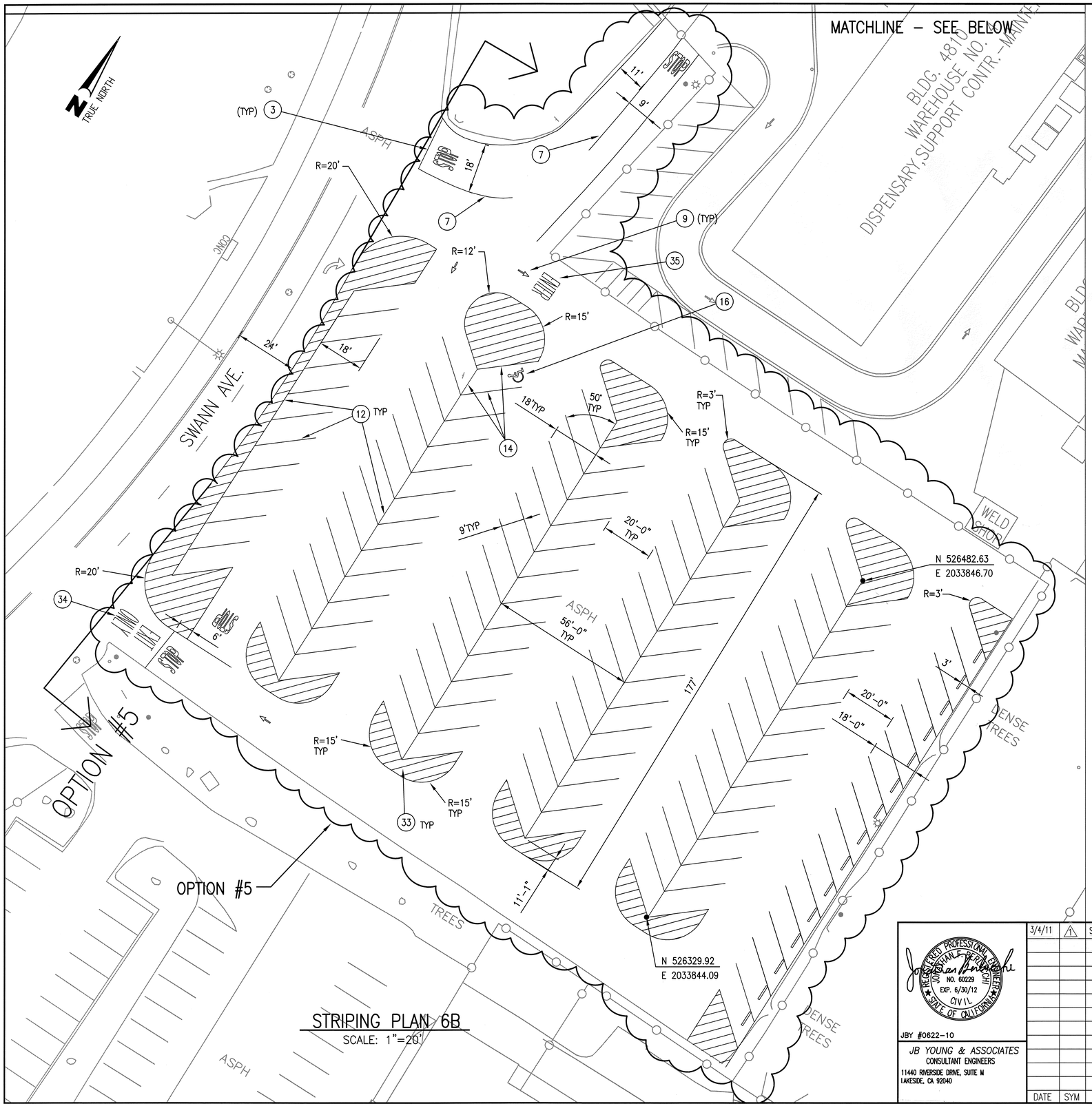

STRIPING PLAN 6B
SCALE: 1"=20'

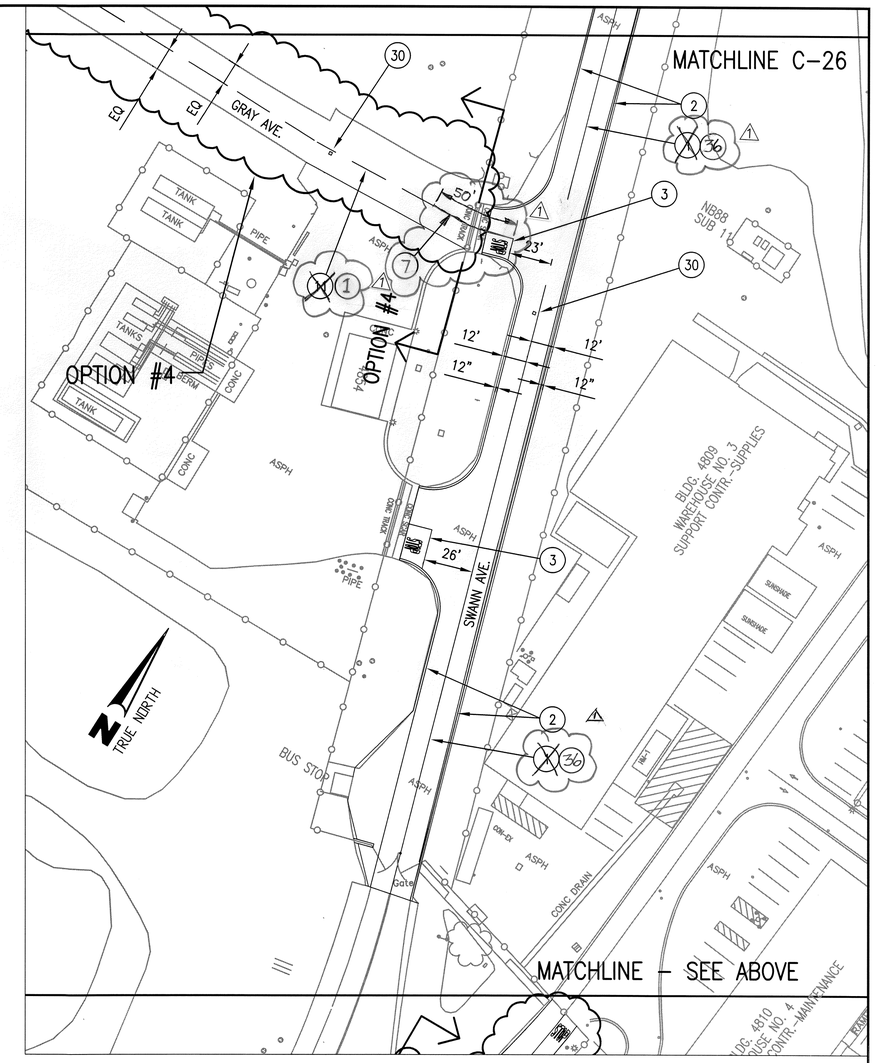

STRIPING PLAN 6A
SCALE: 1"=40'

(XX) NOTES:

– SEE DRAWINGS C-26 FOR BUBBLE NOTE DESCRIPTIONS.

GRAPHIC SCALE: 1"=20'
0 10' 20' 40' 60'

GRAPHIC SCALE: 1"=40'
0 20' 40' 80' 120'

REGISTERED PROFESSIONAL ENGINEER
JONATHAN E. BERGMANN
NO. 60229
EXP. 6/30/12
CIVIL
STATE OF CALIFORNIA

JBY #0622-10

JB YOUNG & ASSOCIATES
CONSULTANT ENGINEERS
11440 RIVERSIDE DRIVE, SUITE M
LAKESIDE, CA 92040

DATE	SYM	REVISION	BY	A'PD
3/4/11	1	STRIPING AND NOTE REVISIONS (GOV'T REVISIONS)		

NATIONAL AERONAUTICS AND SPACE ADMINISTRATION
DRYDEN FLIGHT RESEARCH CENTER
EDWARDS, CA

DRAWING TITLE
STRIPING PLAN #6

PROJECT TITLE
REPAIR FLIGHTLINE ACCESS ROADS & AIRCRAFT RAMPS-DFRC, PHASE 1 OF 2
100% FINAL DESIGN

APPROVALS	DATE
Chief, Facilities Engineering & Asset Mgmt. Office	3-7-11
Project Manager	1-4-11
Facility Manager	1/5/11
Project Requestor/Customer	1/4/11
Safety, Health, & Environmental	1/6/11
Office of Projects Services	1/4/11
Office of the CIO	1/5/11

DATE STRTD	7-29-09	DATE PRNTD	12-7-10
DRAWN BY	JFB	EDM-1706	
SCALE	GRAPHIC	TRADE SH. No. C-23	
FILE NAME		SHEET No. 30 of 43	

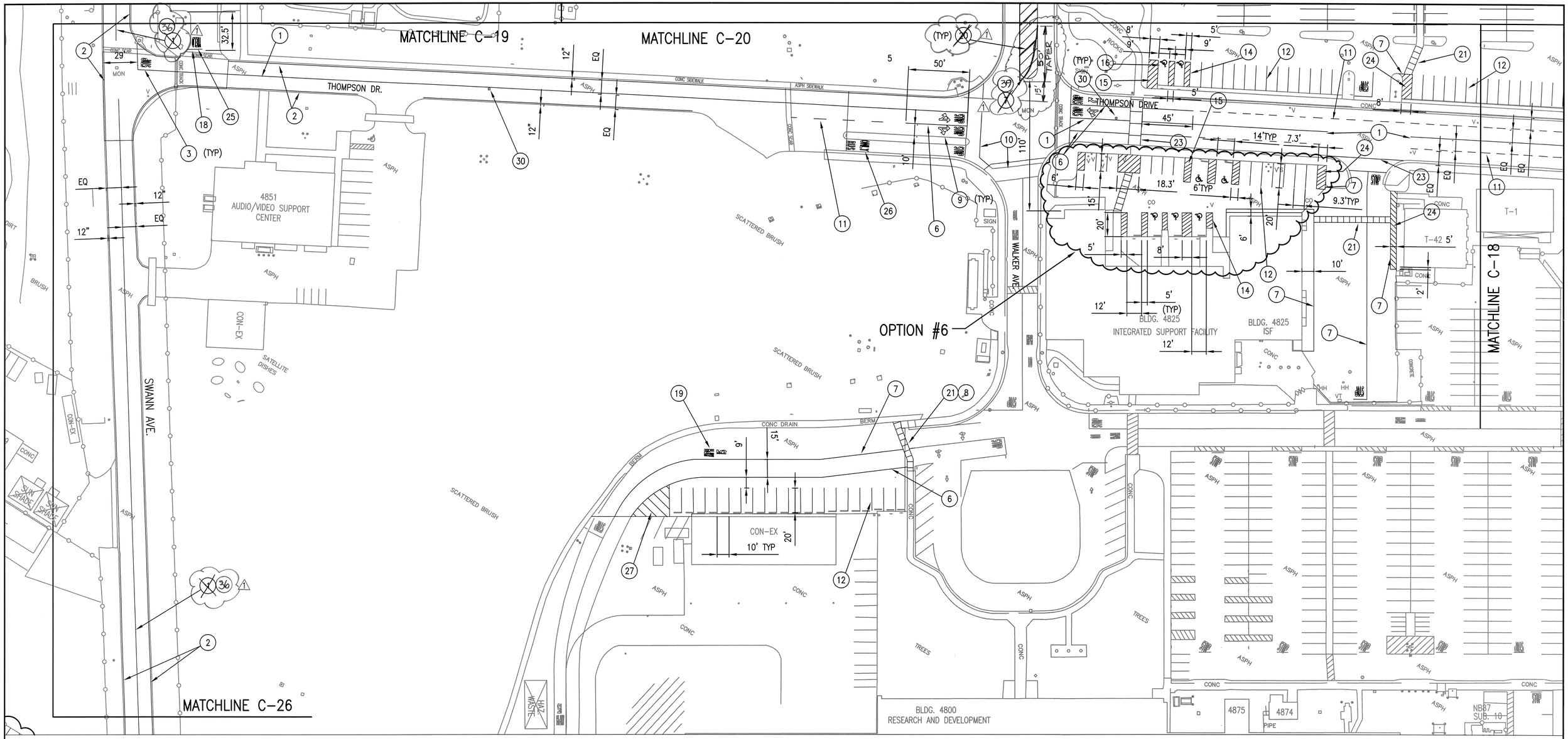

(XX) NOTES:

- SEE DRAWINGS C-26 FOR BUBBLE NOTE DESCRIPTIONS.

TRUE NORTH

GRAPHIC SCALE: 1"=40'

0 20' 40' 80' 120'

REGISTERED PROFESSIONAL ENGINEER
JONATHAN BERNSTEIN
NO. 60229
EXP. 6/30/12
CIVIL
STATE OF CALIFORNIA

JBY #0622-10

JB YOUNG & ASSOCIATES
CONSULTANT ENGINEERS
11440 RIVERSIDE DRIVE, SUITE M
LAKESIDE, CA 92040

DATE	SYM	REVISION	BY	A'PD
3/4/11	1	STRIPING AND NOTE REVISIONS (GOV'T REVISIONS)		

NATIONAL AERONAUTICS AND SPACE ADMINISTRATION
DRYDEN FLIGHT RESEARCH CENTER
EDWARDS, CA

DRAWING TITLE
STRIPING PLAN #7

PROJECT TITLE
REPAIR FLIGHTLINE ACCESS ROADS & AIRCRAFT RAMPS-DFRC, PHASE 1 OF 2
100% FINAL DESIGN

APPROVALS	DATE
Chief, Facilities Engineering & Assets Mgmt. Office	3-7-11
Project Manager	1-4-11
Facility Manager	1/5/11
Project Requestor/Customer	1/4/11
Safety, Health & Environmental	1/6/11
Office of Procurement	1/4/11
Office of the CIO	1/5/11

DATE STRTD	7-29-09	DATE PRNTD	12-7-10
DRAWN BY	JFB		EDM-1706
SCALE	GRAPHIC	TRADE SH. No.	C-24
FILE NAME		SHEET No.	31 of 43

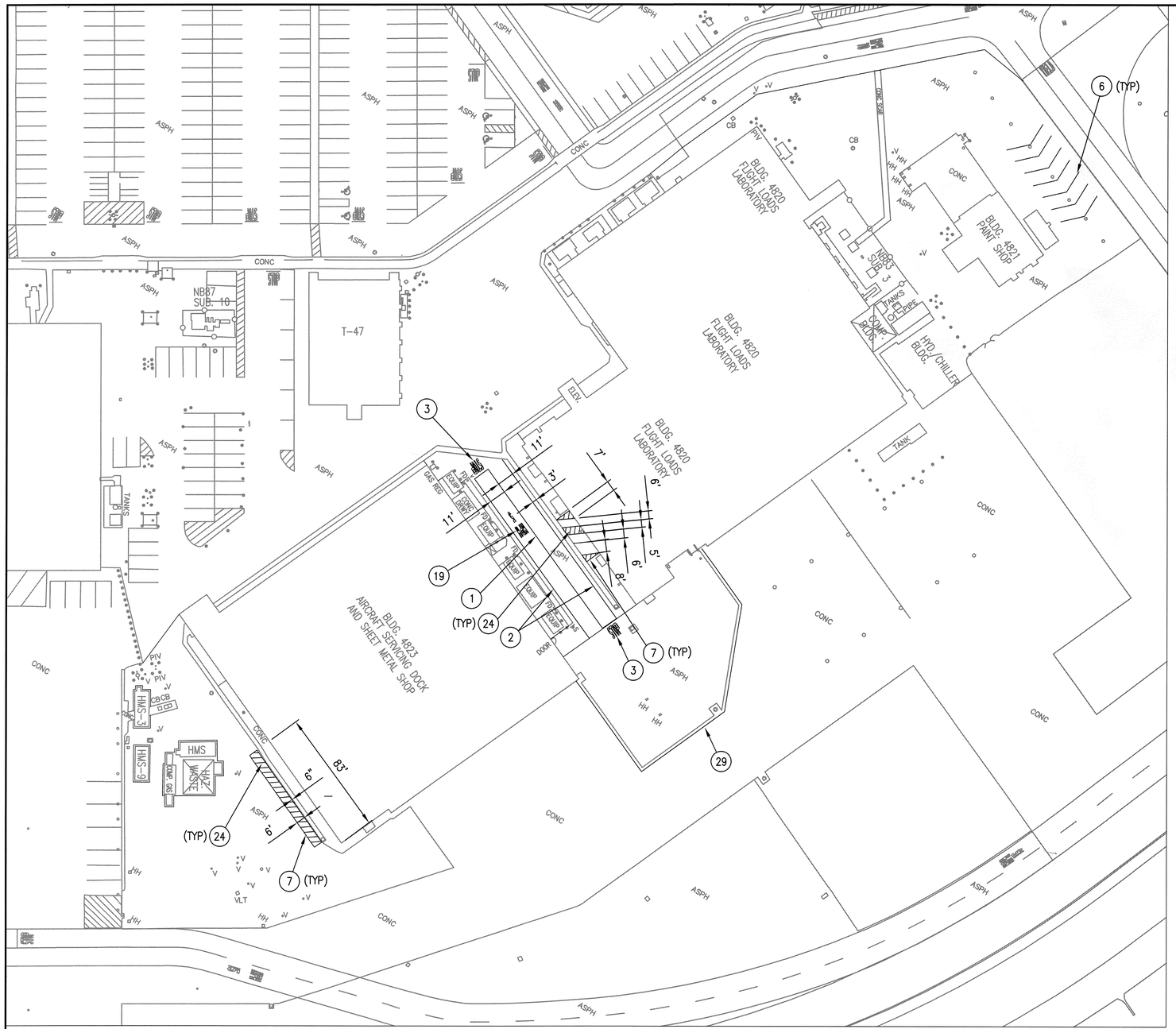

STRIPING PLAN 8A

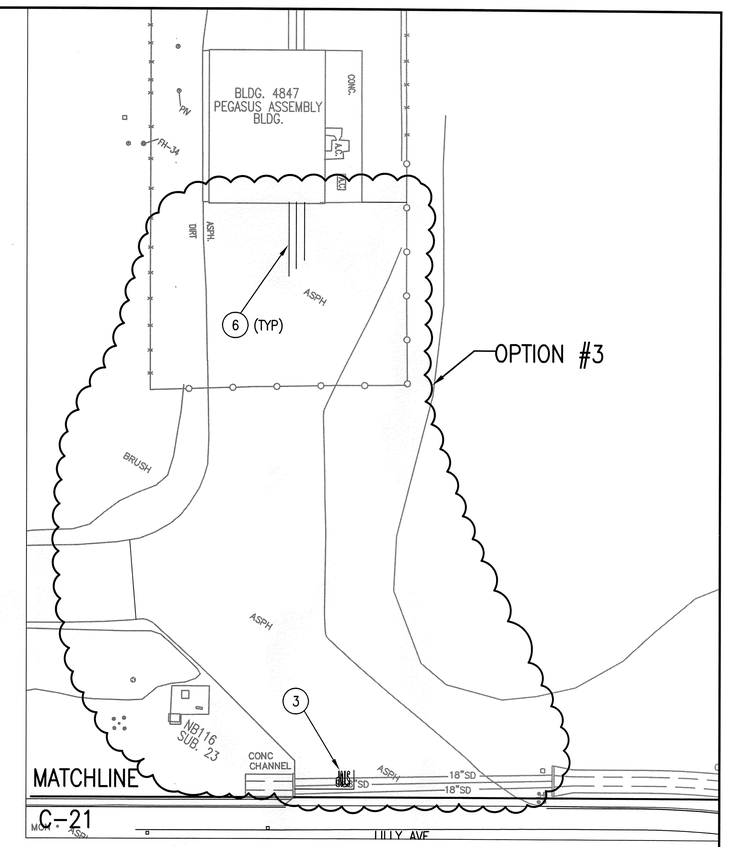

STRIPING PLAN 8B

GRAPHIC SCALE: 1"=40'

0 20' 40' 80' 120'

(XX) NOTES:

- SEE DRAWINGS C-26 FOR BUBBLE NOTE DESCRIPTIONS.

REGISTERED PROFESSIONAL ENGINEER
JONATHAN E. BERENTSCH
NO. 60229
EXP. 6/30/12
CIVIL
STATE OF CALIFORNIA

JBY #0622-10

JB YOUNG & ASSOCIATES
CONSULTANT ENGINEERS
11440 RIVERSIDE DRIVE, SUITE M
LAKESIDE, CA 92040

DATE	SYM	REVISION	BY	A'PD

NATIONAL AERONAUTICS AND SPACE ADMINISTRATION
DRYDEN FLIGHT RESEARCH CENTER
EDWARDS, CA

DRAWING TITLE
STRIPING PLAN #8

PROJECT TITLE
REPAIR FLIGHTLINE ACCESS ROADS & AIRCRAFT RAMPS-DFRC, PHASE 1 OF 2
100% FINAL DESIGN

APPROVALS	DATE
Chief, Facilities Engineering & Asset Mgmt. Office	3-7-11
Project Manager	1-4-11
Facility Manager	1/5/11
Project Requestor/Customer	1/4/11
Safety, Health & Environmental Office of Protection Services	1/6/11
Office of the CIO	1/4/11
	1/5/11

DATE STRTD	7-29-09	DATE PRNTD	12-7-10
DRAWN BY	JFB	EDM-1706	
SCALE	GRAPHIC	TRADE SH. No.	C-25
FILE NAME		SHEET No. 32 of 43	

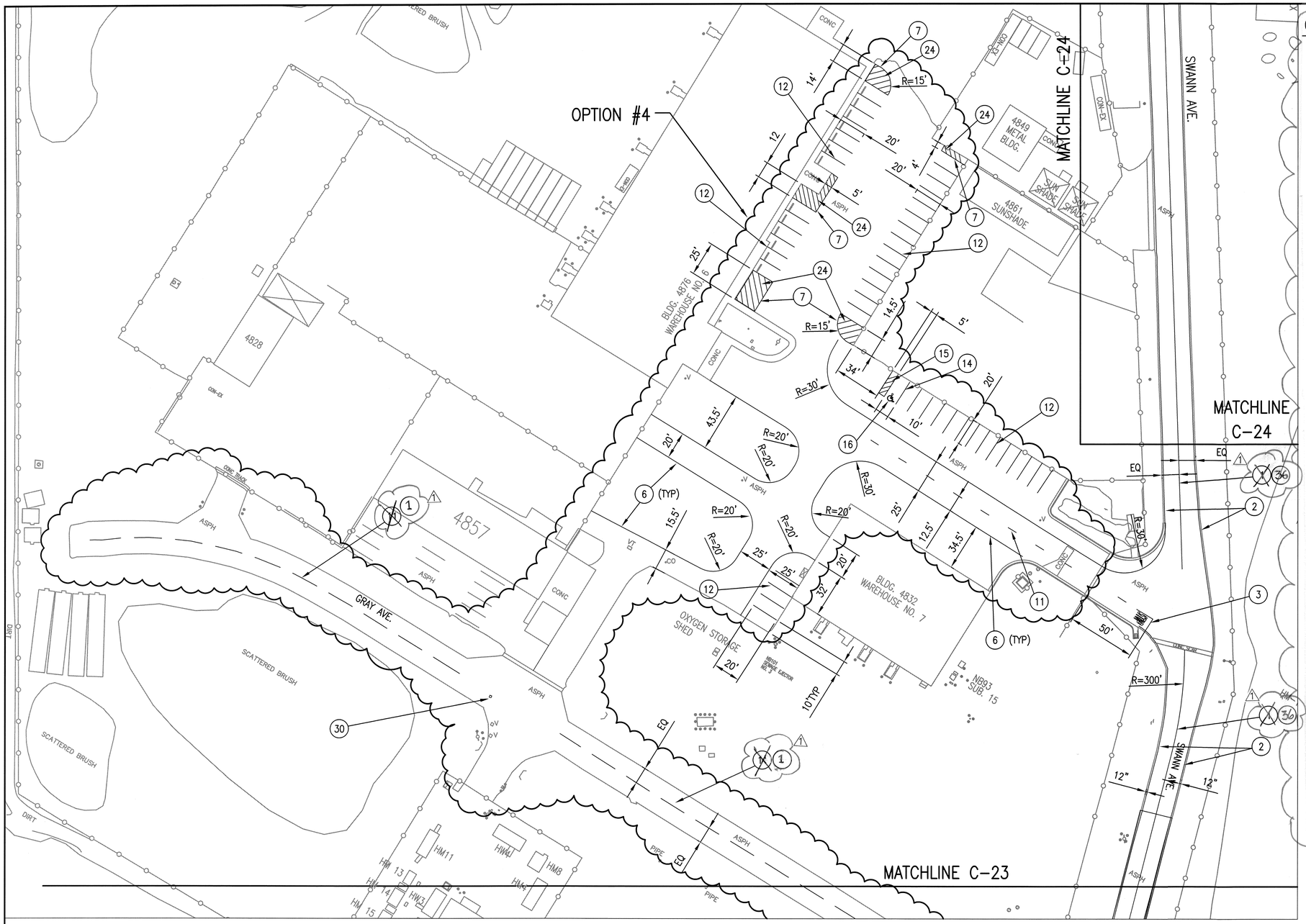

(XX) NOTES FOR DRAWINGS C-18 TO C-26

1) INSTALL DOUBLE 4" YELLOW CENTERLINE STRIPE WITH 3" BLACK STRIPE IN THE MIDDLE PER CALTRANS STANDARD A20A DET. 21.
2) INSTALL SINGLE 4" WIDE WHITE SHOULDER STRIPE PER CALTRANS STANDARD A20B DET. 27B.
3) INSTALL WHITE STOP BAR AND STOP TEXT PER CALTRANS STANDARD A24D AND DETAIL 1 C-26 C-34
4) INSTALL PAINTED RAILROAD CROSSING SYMBOL PER CALTRANS STANDARD A24C AND DETAIL 8 C-26 C-34
5) INSTALL (3) 12" WIDE WHITE RAILROAD STOP BARS. BARS SHALL BE 12" CLEAR OF EACH OTHER.
6) INSTALL SINGLE 4" WIDE WHITE STREET STRIPE (TYP.).
7) INSTALL SINGLE 4" WIDE YELLOW STREET STRIPE (TYP.).
8) HYDROBLAST AND REMOVE UNUSED STRIPING. SEALCOAT HYDROBLAST AREA.
9) INSTALL PAINTED ARROW, SEE DETAIL 2 C-26 C-34
10) INSTALL YELLOW PAINTED CROSSWALK TO MATCH EXISTING.
11) INSTALL WHITE DASHED STREET LANE STRIPE PER CALTRANS STANDARD A20A DET. 8 (TYP.).
12) INSTALL 4" WHITE PARKING STRIPE EQUALLY SPACED (TYP.).
13) INSTALL 4" WHITE PARKING STALL CENTERLINE STRIPE. ALIGN WITH MIDDLE OF CURBED ISLANDS (TYP.).
14) INSTALL 4" BLUE PARKING STRIPE (TYP.).
15) INSTALL 4" BLUE DIAGONAL STRIPE AT 3' O/C AND 45' (TYP.).
16) INSTALL PAINTED HANDICAP SYMBOL (TYP.), SEE DETAIL 3 C-26 C-34
17) INSTALL 8" YELLOW STRIPE.
18) INSTALL 12" WHITE STRIPE.
19) INSTALL PAINTED WHITE "15 MPH" TEXT TO MATCH EXISTING.
20) INSTALL 4" YELLOW DIAGONAL STRIPE AT 6' O/C AND 45'.
21) INSTALL 5' WIDE WHITE CROSSWALK, SEE DETAIL 4 C-26 C-34
22) INSTALL RAISED WHITE MARKER RUMBLE STRIP, SEE DETAIL 5 C-26 C-34
23) INSTALL 8' WIDE WHITE CROSSWALK, SEE DETAIL 4 C-26 C-34
24) INSTALL 4" YELLOW DIAGONAL STRIPE AT 3' O/C AND 45'.
25) INSTALL PAINTED WHITE "YIELD" TEXT PER CALTRANS STANDARD A24D AND DETAIL 6 C-26 C-34
26) INSTALL PAINTED WHITE "BUS ONLY" TEXT, SEE DETAIL 9 C-26 C-34
27) INSTALL 4" WHITE DIAGONAL STRIPE AT 6' O/C AND 45'.
28) INSTALL PAINTED 50' LONG x 12' WIDE REVERSE CURVE.
29) INSTALL 8" WIDE RED STRIPE AROUND THE PERIMETER OF THE NEW 8" THICK CONCRETE PAVEMENT.
30) INSTALL NEW 2-WAY BLUE REFLECTIVE MARKER 6" FROM CENTERLINE TRAFFIC STRIPE PERPENDICULAR TO EXIST. FIRE HYDRANT.
31) INSTALL PAINTED WHITE "CART ONLY" TEXT STRIPING TO MATCH EXISTING.
32) INSTALL PAINTED WHITE "BUS PARKING ONLY" TEXT STRIPING TO MATCH EXISTING.
33) INSTALL 4" WHITE DIAGONAL STRIPE AT 3' O/C AND 45'.
34) INSTALL "EXIT ONLY" WHITE TEXT TO MATCH EXISTING.
35) INSTALL "ENTER" WHITE TEXT TO MATCH EXISTING.
36) INSTALL DOUBLE 4" YELLOW CENTERLINE STRIPE WITH 3" BLACK STRIPE IN THE MIDDLE PER CALTRANS STANDARD A20A DET. 22.
37) INSTALL 12" WIDE WHITE CHANNELIZING LINE PER CALTRANS STANDARD A20D DET. 38.
38) INSTALL WHITE DASHED STREET LANE STRIPE PER CALTRANS STANDARD A20A DET. 9 (TYP.).
39) INSTALL MEDIAN ISLAND STRIPING PER CALTRANS STANDARD A20B DET. 29 WITH 12" YELLOW DIAGONAL STRIPE AT 25' O/C AND 45'.
40) INSTALL YELLOW LEFT EDGELINE PER CALTRANS STANDARD A20B DET. 25.

NOTE: ALL PAVEMENT MARKING "TEXT" AND SYMBOLS SHALL CONFORM TO CALTRANS STANDARD A24A THRU A24E.

TRUE NORTH

GRAPHIC SCALE: 1"=40'

0 20' 40' 80' 120'

REGISTERED PROFESSIONAL ENGINEER JONATHAN F. BERNARDINI NO. 60229 EXP. 6/30/12 CIVIL STATE OF CALIFORNIA

JBY #0622-10

JB YOUNG & ASSOCIATES
CONSULTANT ENGINEERS
11440 RIVERSIDE DRIVE, SUITE M
LAKESIDE, CA 92040

DATE	SYM	REVISION	BY	A'PD
3/4/11	1	STRIPING AND NOTE REVISIONS (GOV'T REVISIONS)		

NATIONAL AERONAUTICS AND SPACE ADMINISTRATION
DRYDEN FLIGHT RESEARCH CENTER
EDWARDS, CA

DRAWING TITLE
STRIPING PLAN #9

PROJECT TITLE
REPAIR FLIGHTLINE ACCESS ROADS & AIRCRAFT RAMPS-DFRC, PHASE 1 OF 2
100% FINAL DESIGN

APPROVALS	DATE
Chief Facilities Engineering & Assess.Mgmt. Office	3-7-11
Project Manager	1-4-11
Facility Manager	1/5/11
Project Requestor/Customer	1/4/11
Safety, Health & Environmental	1/6/11
Office of Protective Services	1/4/11
Office of the CIO	1/5/11

DATE STRTD	7-29-09	DATE PRNTD	12-7-10
DRAWN BY	JFB		EDM-1706
SCALE	GRAPHIC	TRADE SH. No. C-26	
FILE NAME		SHEET No. 33 of 43	

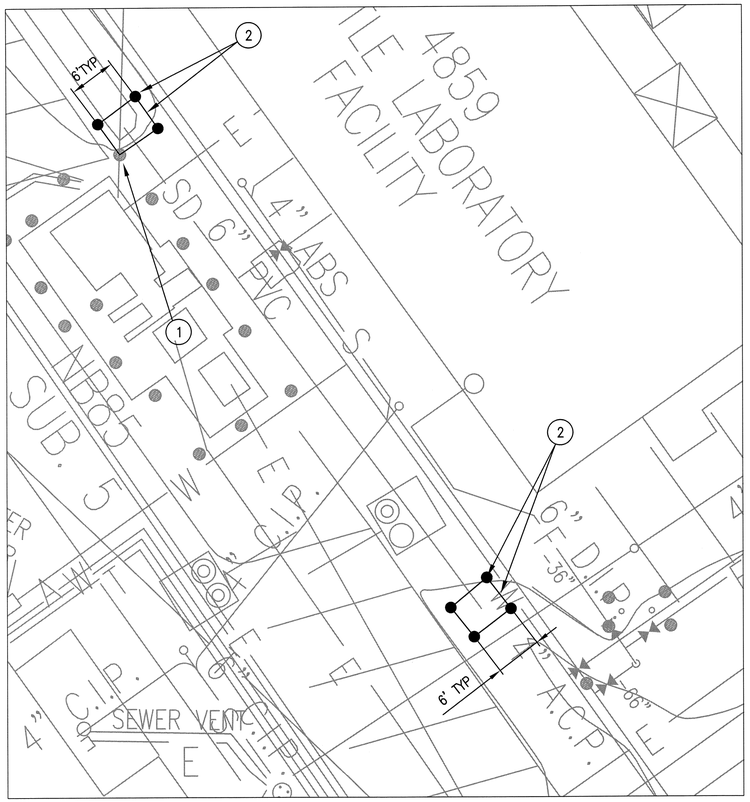

PLAN 1
SCALE = 1"=10' C-5 | C-27

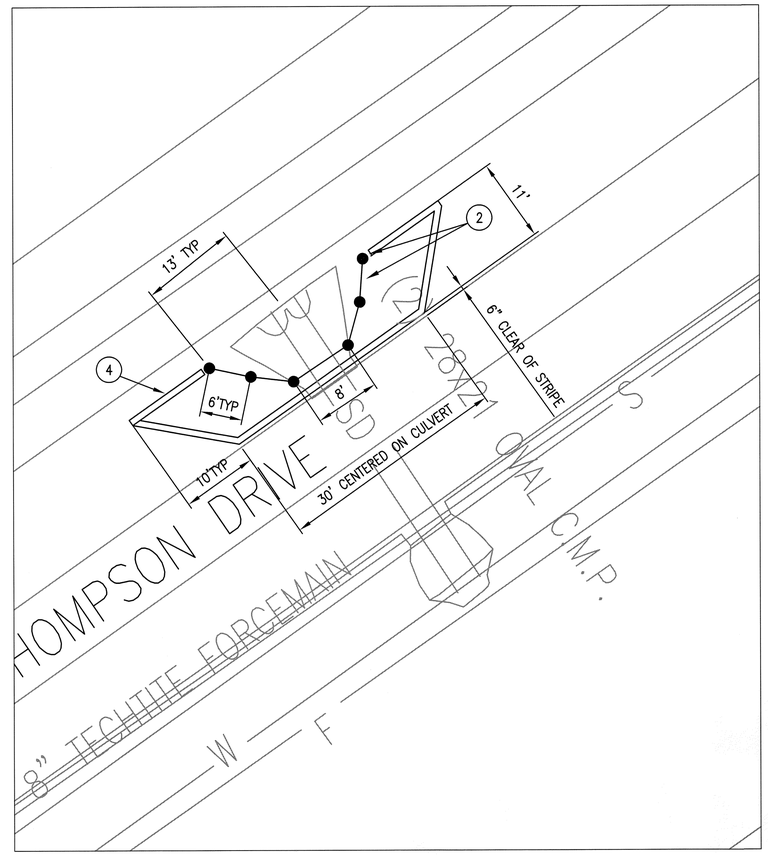

PLAN 2
SCALE = 1"=10' C-5 | C-27

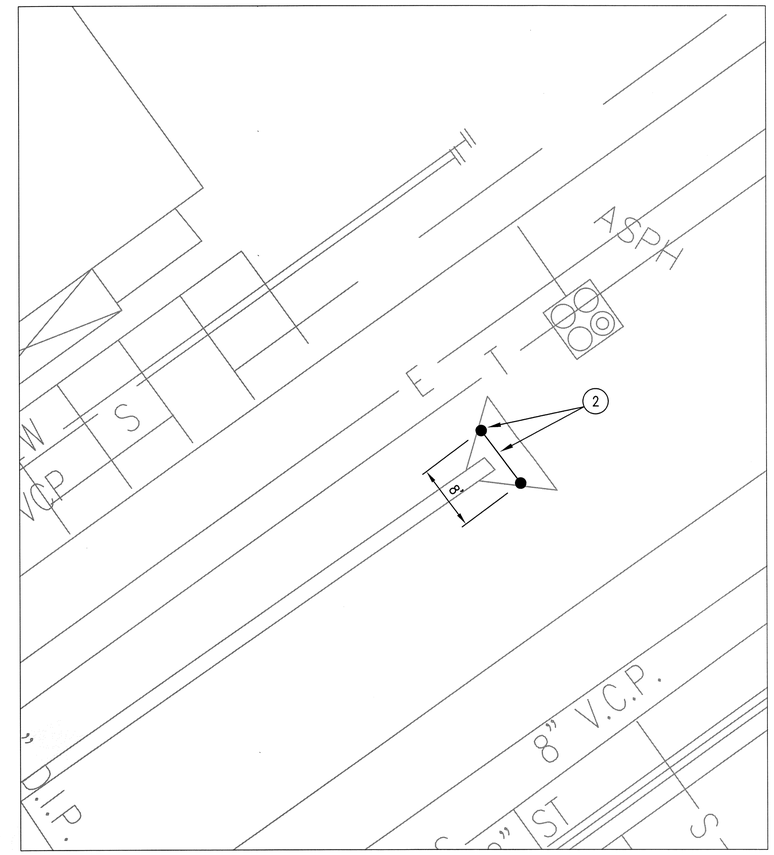

PLAN 3
SCALE = 1"=10' C-4 | C-27

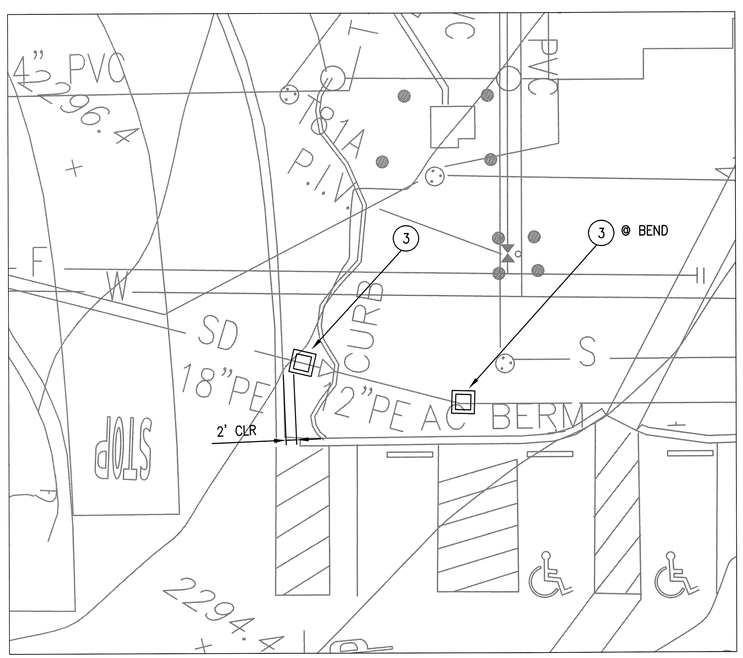

PLAN 4
SCALE = 1"=10' C-14 | C-27

(XX) NOTES:

1) WELD NEW METAL EYEBOLT TO EXISTING METAL GUARD POST. CONNECT TO NEW METAL CHAIN.
2) INSTALL 4"ø GUARD POSTS, SEE DETAIL 2 (C-27 | C-8)
   INSTALL HEAVY DUTY METAL CHAIN IN BETWEEN GUARD POSTS.
   CONNECT CHAIN TO NEW EYE BOLT WELDED TO EACH GUARD POST 3'-9" ABOVE GRADE.
3) INSTALL NEW 2'X2' (I.D.) CATCH BASIN, SEE DETAIL 5 (C-27 | C-32)
   TOP OF NEW GRATE = 2294.75±.
   CONTRACTOR SHALL POTHOLE STORM DRAIN PIPE TO DETERMINE INVERT ELEVATION BEFORE CONSTRUCTION.
   CONTRACTOR SHALL REMOVE AND REPLACE GRAVEL GROUND COVER TO MATCH EXISTING.
   CONTRACTOR SHALL GRADE AREA TO DRAIN TO NEW CATCH BASIN AS REQUIRED.
4) INSTALL NEW ASPHALT BERM ON TOP OF EXISTING ASPHALT PAVEMENT, SEE DETAIL 6 (C-27 | C-31)
   PAINT ASPHALT BERM SAFETY YELLOW TO MATCH EXISTING.
   INSTALL 12" GAP IN ASPHALT BERM AS NEEDED FOR DRAINAGE.
   INSTALL PAINT BINDER BETWEEN BOTTOM OF ASPHALT BERM AND TOP OF EXST PVMT.

NOTE: ALL WORK ON THIS DRAWING IS PER BASE BID.

GRAPHIC SCALE: 1"=10'
0 5' 10' 20' 30'

TRUE NORTH

REGISTERED PROFESSIONAL ENGINEER
JONATHAN BERNSTEIN
NO. 60229
EXP. 6/30/12
CIVIL
STATE OF CALIFORNIA

JBY #0622-10

JB YOUNG & ASSOCIATES
CONSULTANT ENGINEERS
11440 RIVERSIDE DRIVE, SUITE M
LAKESIDE, CA 92040

DATE	SYM	REVISION	BY	A'PD

NATIONAL AERONAUTICS AND SPACE ADMINISTRATION
DRYDEN FLIGHT RESEARCH CENTER
EDWARDS, CA

DRAWING TITLE
ENLARGED SITE PLANS

PROJECT TITLE
REPAIR FLIGHTLINE ACCESS ROADS & AIRCRAFT RAMPS-DFRC, PHASE 1 OF 2
100% FINAL DESIGN

APPROVALS	DATE
Chief, Facilities Engineering & Asset Mgmt. Office	3-7-11
Project Manager	1-4-11
Facility Manager	1/5/11
Project Requestor/Customer	1/4/11
Safety, Health & Environmental	1/6/11
Office of Protective Services	1/4/11
Office of the CIO	1/5/11

DATE STRTD	7-29-09	DATE PRNTD	12-7-10
DRAWN BY	JFB		EDM-1706
SCALE	GRAPHIC	TRADE SH. No. C-27	
FILE NAME		SHEET No. 34 of 43	

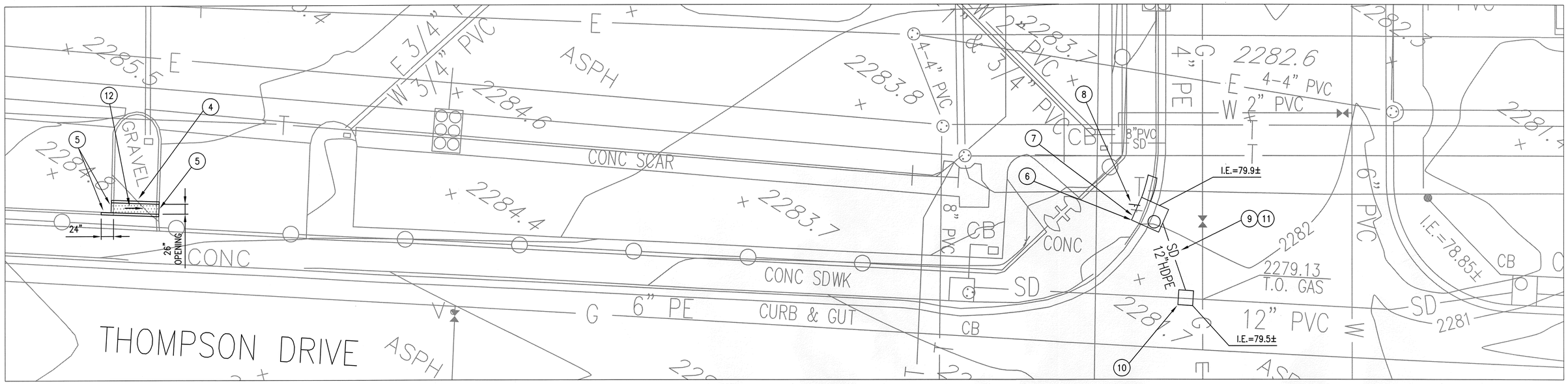

PLAN
SCALE = 1"=10'
2 C-16 C-28

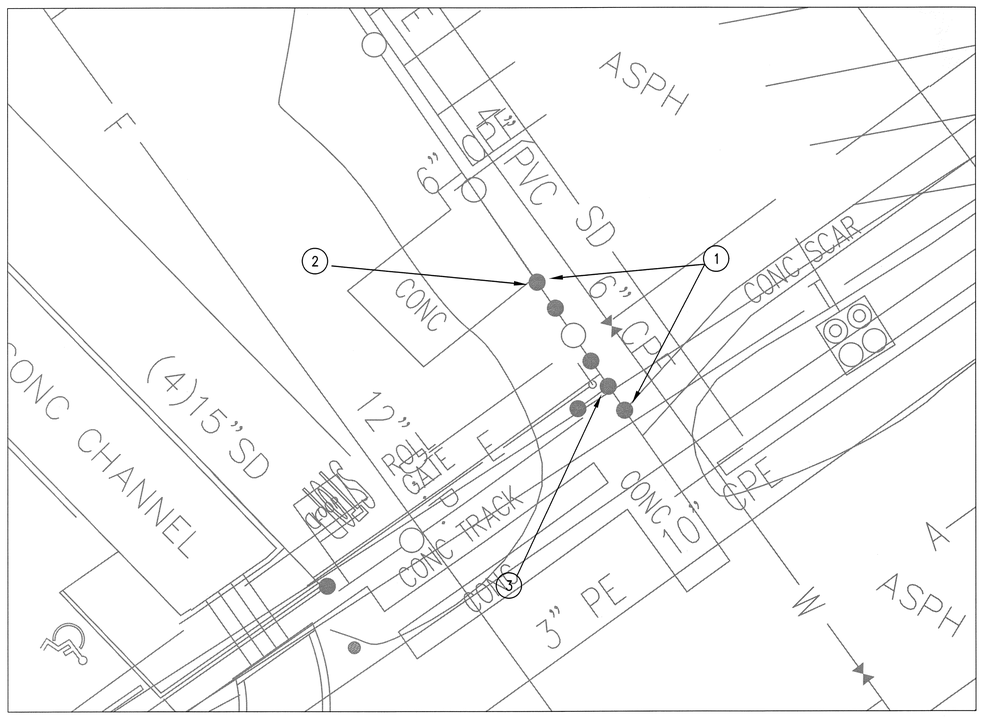

PLAN
SCALE = 1"=10'
1 C-15 C-28

(XX) NOTES:

1) REMOVE & DISPOSE OF 6' TALL CHAIN LINK FENCING WITH BARB WIRE, METAL POSTS, & CONC POST FOUNDATIONS (21'± LONG).
PROTECT TWO (2) EXISTING METAL CONDUITS THAT ARE MOUNTED TO FENCING, IN PLACE.
INSTALL NEW 8' TALL CHAIN LINK FENCING AND BARB WIRE, SEE DETAIL 2 C-28 C-33
AFTER THE NEW FENCE IS INSTALLED, MOUNT THE TWO (2) METAL CONDUITS TO NEW FENCING.
REPAIR ASPHALT PAVEMENT AROUND NEW FENCE POSTS TO MATCH EXISTING.
2) EXISTING TURNSTILE FENCE POST TO REMAIN.
3) INSTALL NEW GATE POST AT FENCE INTERSECTION.
4) INSTALL NEW 36" WIDE CURBED CONCRETE SWALE, SEE DETAIL 6 C-28 C-32
REMOVE, SALVAGE, & REPLACE GRAVEL GROUND COVER TO MATCH EXST.
5) REMOVE AND DISPOSE OF CONCRETE CURBING.
CONNECT NEW CURBING TO EXISTING CURBING WITH AN EXPANSION JOINT.
REPAIR ERODED DIRT AREA UNDER FENCING.
6) SAWCUT, REMOVE, AND DISPOSE OF CONCRETE SIDEWALK, CURB AND GUTTER AS REQUIRED.
REMOVE AND SALVAGE EXISTING STOP SIGN. REMOVE AND DISPOSE OF POST AND CONC FOUNDATION.
DO NOT INTERFERE WITH EXISTING CONCRETE HANDICAP RAMP. START WORK AT HANDICAP RAMP JOINT.
SEE PAVEMENT REPAIR PLAN FOR ASPHALT REPAIR NOTES.
7) INSTALL NEW CURB INLET CATCH BASIN, SEE DETAIL 1 C-28 C-33
INSTALL 5' LONG WINGWALL. CURVE WINGWALL TO MATCH EXISTING CURB RADIUS.
REPAIR CONCRETE SIDEWALK, CURB, & GUTTER TO MATCH EXISTING.
8) INSTALL SALVAGED STOP SIGN, NEW METAL POST, AND NEW CONCRETE FOUNDATION, SEE DETAIL 3 C-28 C-33
9) INSTALL NEW 12" HDPE STORM DRAIN PIPE. PIPE SLOPE = 2% MIN. SEE DETAIL 3 C-28 C-31
PIPE SHALL BE DESIGNED FOR H-20 LOADING WITH 12" OF COVER.
10) INSTALL NEW 24"X24" PRE-CAST CONCRETE CLEANOUT BOX, SEE DETAIL 5 C-28 C-32
NEW CLEANOUT SHALL BE INSTALLED A MINIMUM OF 24" CLEAR OF EXST GAS LINE.
11) CONTRACTOR SHALL POTHOLE STORM DRAIN POC BEFORE ORDERING ANY MATERIAL TO DETERMINE IF 12" MINIMUM COVER IS ACHIEVABLE.
12) DRAINAGE FLOW ARROW.

TRUE NORTH

GRAPHIC SCALE: 1"=10'
0 5' 10' 20' 30'

REGISTERED PROFESSIONAL ENGINEER
JONATHAN BERNARD CHI
NO. 60229
EXP. 6/30/12
CIVIL
STATE OF CALIFORNIA

JBY #0622-10

JB YOUNG & ASSOCIATES
CONSULTANT ENGINEERS
11440 RIVERSIDE DRIVE, SUITE M
LAKESIDE, CA 92040

DATE	SYM	REVISION	BY	A'PD

NATIONAL AERONAUTICS AND SPACE ADMINISTRATION
DRYDEN FLIGHT RESEARCH CENTER
EDWARDS, CA

DRAWING TITLE
ENLARGED SITE PLANS

PROJECT TITLE
REPAIR FLIGHTLINE ACCESS ROADS & AIRCRAFT RAMPS-DFRC, PHASE 1 OF 2
100% FINAL DESIGN

APPROVALS	DATE
Chief Facilities Engineering & Asset Mgmt. Office	3-7-11
Project Manager	1-4-11
Facility Manager	1/5/11
Project Regulator/Customer	1/4/11
Safety, Health & Environmental	1/6/11
Office of Professional Services	1/4/11
Office of the CIO	1/5/11

DATE STRTD	7-29-09	DATE PRNTD	12-7-10
DRAWN BY	JFB		EDM-1706
SCALE	GRAPHIC	TRADE SH. No. C-28	
FILE NAME		SHEET No. 35 of 43	

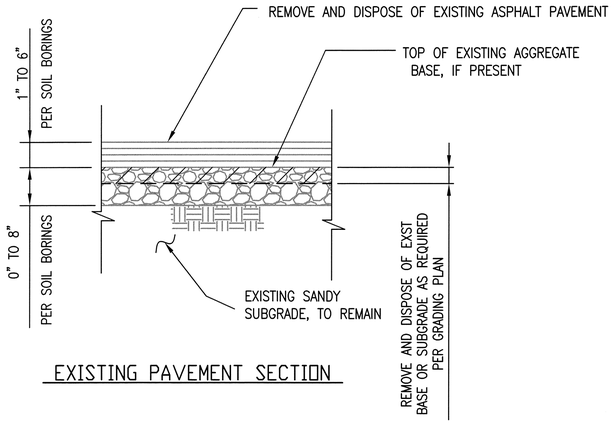

EXISTING PAVEMENT SECTION

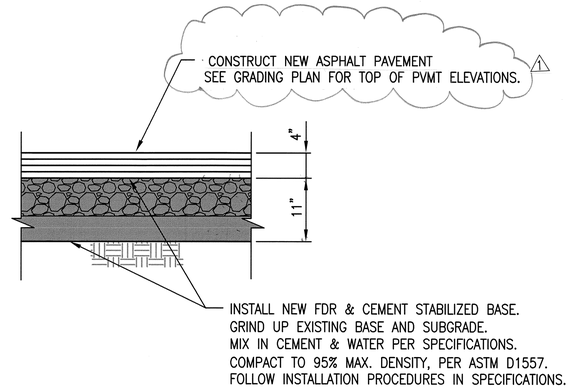

NEW PAVEMENT SECTION USING FDR CEMENT TREATED BASE
MAINTAIN EXISTING TOP OF PAVEMENT GRADES

NOTES:

1) EXISTING PAVEMENT AND BASE THICKNESS ARE BASED ON SOILS REPORT. SEE DRAWINGS T-3 TO T-6 FOR BORING LOGS AND MAP.
2) CONTRACTOR SHALL GRADE AREA AFTER PAVEMENT IS REMOVED TO PROVIDE SMOOTH GRADE FOR DRAINAGE. SOME SUBGRADE MATERIAL MAY NEED TO BE MOVED, IMPORTED, OR EXPORTED TO PROVIDE SMOOTH GRADE TRANSITION FOR DRAINAGE. SEE GRADING PLANS FOR NEW TOP OF PAVEMENT ELEVATIONS AND CONTOURS.
3) CONTRACTOR IS ALLOWED TO USE CONVENTIONAL ASPHALT AND BASE REPLACEMENT METHOD IN-LUE OF FDR METHOD, PER DETAIL 3 C-29 | C-29
4) FOR ADDITIONAL ROAD CROWNING NOTES, SEE DETAIL 4 C-29 | C-29

NEW PAVEMENT DETAIL – MAINTAIN EXISTING TOP OF PVMT GRADES

SCALE: NONE

1 C-1 TO C-4 | C-29
C-6 TO C-10
C-12 TO C-17

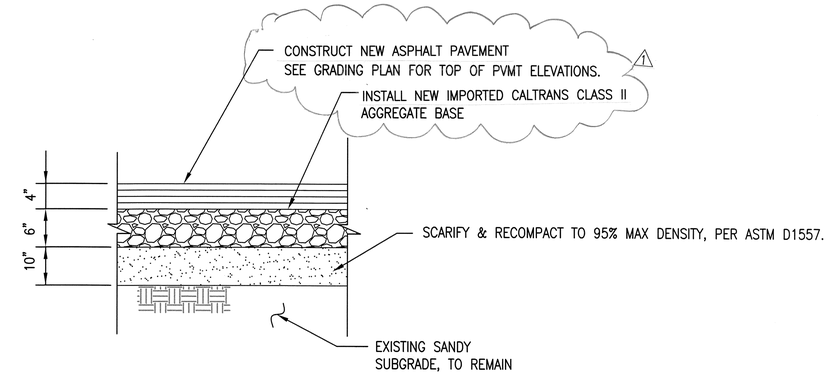

ALTERNATIVE NEW PAVEMENT SECTION USING CONVENTIONAL CLASS II BASE
FOR AREAS WHERE CEMENT TREATMENT IS NOT PRACTICAL

DETAIL 3

NO SCALE

C-29 | C-29
C-11
C-14

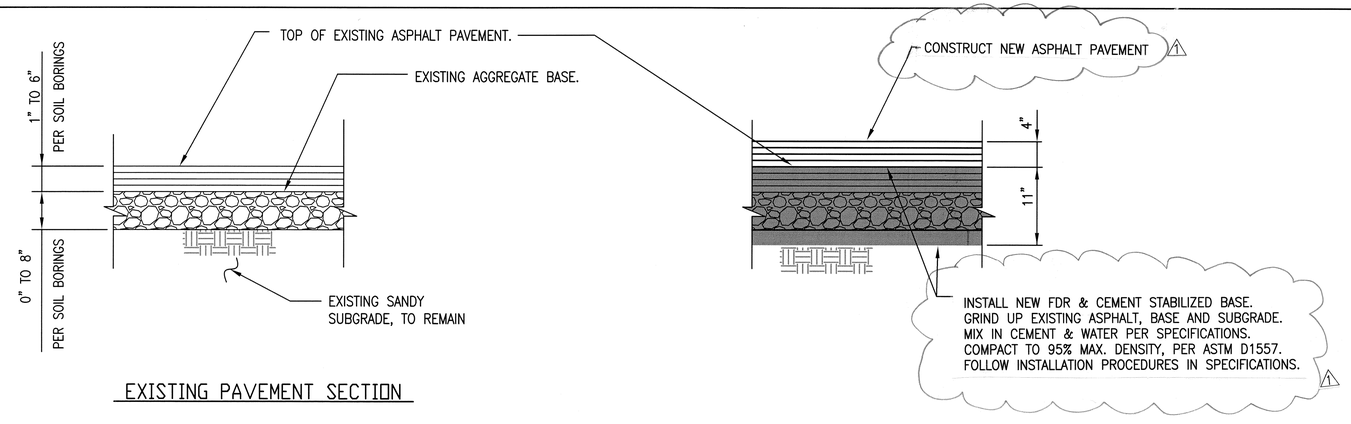

EXISTING PAVEMENT SECTION

NEW PAVEMENT SECTION USING FDR CEMENT TREATED BASE

NEW PAVEMENT DETAIL – RAISE EXISTING TOP OF PVMT GRADES 1

SCALE: NONE

2 C-1 TO C-3 | C-29
C-12 TO C-14

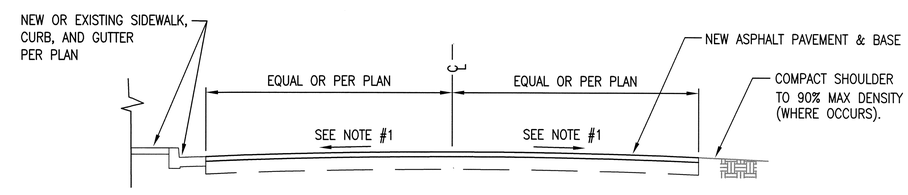

NOTES:

1) CROSS GRADE SHALL BE BETWEEN 1.5% AND 5% UNLESS OTHERWISE NOTED PER GRADING PLAN. CROSS GRADE BE NO LESS THAN 1%.

TYPICAL CROWNED ASPHALT PAVEMENT ROAD SECTION

DETAIL 4

NO SCALE

C-29 | C-29

NOTES:

1) EXISTING PAVEMENT AND BASE THICKNESS ARE BASED ON SOILS REPORT. SEE DRAWINGS T-3 TO T-6 FOR BORING LOGS AND MAP.
2) CONTRACTOR SHALL GRADE AREA AFTER PAVEMENT IS REMOVED TO PROVIDE SMOOTH GRADE FOR DRAINAGE. SOME SUBGRADE MATERIAL MAY NEED TO BE MOVED, IMPORTED, OR EXPORTED TO PROVIDE SMOOTH GRADE TRANSITION FOR DRAINAGE. SEE GRADING PLANS FOR NEW TOP OF PAVEMENT ELEVATIONS AND CONTOURS.
3) CONTRACTOR IS ALLOWED TO USE CONVENTIONAL ASPHALT AND BASE REPLACEMENT METHOD IN-LUE OF FDR METHOD, PER DETAIL 3 C-29 | C-29
4) FOR ADDITIONAL ROAD CROWNING NOTES, SEE DETAIL 4 C-29 | C-29

REGISTERED PROFESSIONAL ENGINEER
JONATHAN P. BRANCH
NO. 60229
EXP. 6/30/12
CIVIL
STATE OF CALIFORNIA

JBY #0622-10

JB YOUNG & ASSOCIATES
CONSULTANT ENGINEERS
11440 RIVERSIDE DRIVE, SUITE M
LAKESIDE, CA 92040

DATE	SYM	REVISION	BY	A'PD
3/4/11	1	STRIPING AND NOTE REVISIONS (GOV'T REVISIONS)		

NATIONAL AERONAUTICS AND SPACE ADMINISTRATION
DRYDEN FLIGHT RESEARCH CENTER
EDWARDS, CA

DRAWING TITLE
DETAILS

PROJECT TITLE
REPAIR FLIGHTLINE ACCESS ROADS & AIRCRAFT RAMPS-DFRC, PHASE 1 OF 2
100% FINAL DESIGN

APPROVALS	DATE
Chief, Facilities Engineering & Asset Mgmt. Office	3-7-11
Project Manager	1-4-11
Facility Manager	1/5/11
Project Requestor/Customer	1/4/11
Safety, Health & Environmental	1/6/11
Office of Protective Services	1/4/11
Office of IPOM	1/5/11

DATE STRTD	7-29-09	DATE PRNTD	12-7-10
DRAWN BY	JFB		EDM-1706
SCALE	GRAPHIC	TRADE SH. No. C-29	SHEET No. 36 of 43
FILE NAME			

TYPICAL SPALL REPAIR NOTES

A. MAKE VERTICAL SAWCUT 2" DEEP MINIMUM 2" FROM DISTRESSED AREA.

B. REMOVE ALL CONCRETE WITHIN SAWED AREA TO SOUND CONCRETE (3" MINIMUM DEPTH).

C. TO MAINTAIN AND PROTECT JOINT (OR CRACK) USE A SEPARATING MEDIUM.

D. GROUT AND PATCH WITH APPROVED SPALL REPAIR COMPOUND PER SPECIFICATIONS.

E. AFTER CURING CLEAN JOINT (OR CRACK) AND APPLY JOINT SEALANT.

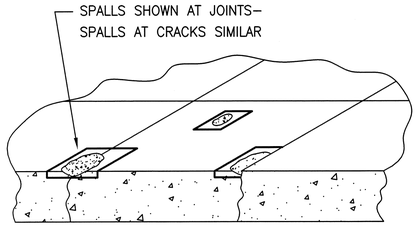

TYPICAL PAVEMENT

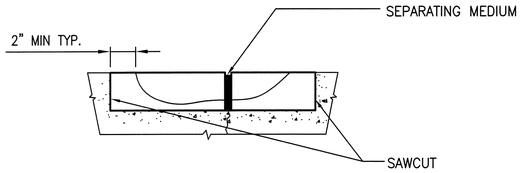

REPAIR EACH SIDE OF JOINT OR CRACK

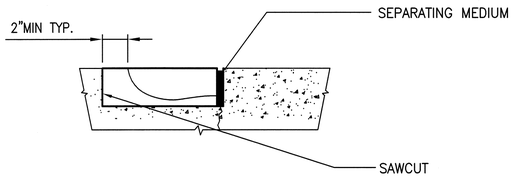

REPAIR ONE SIDE OF JOINT OR CRACK

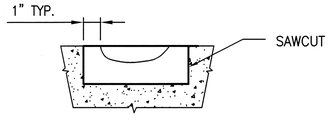

POPOUT REPAIR

SPALL OR POPOUT REPAIR DETAILS

DETAIL 1 (C-11 | C-30)
NO SCALE

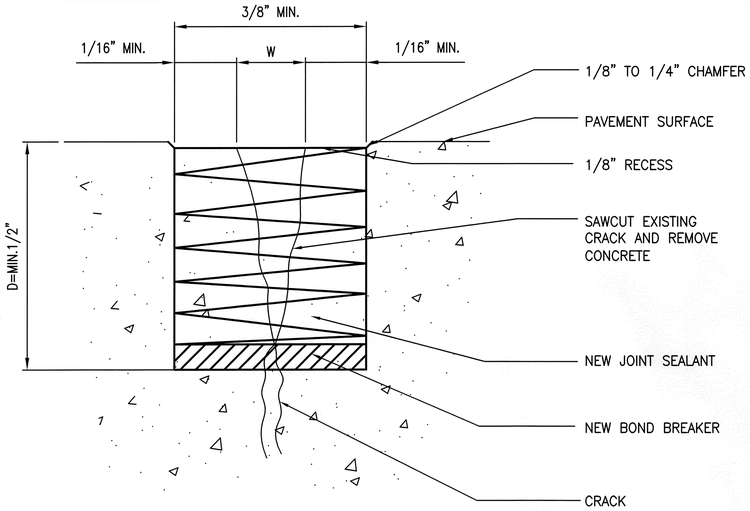

W= EXISTING CRACK WIDTH (VARIES FROM 0.005' TO 0.2')

D= SEALANT DEPTH SHALL EQUAL NEW JOINT WIDTH AFTER SAWCUTTING OR 1/2" WHICHEVER IS GREATER

NOTES: REPAIR OF PREVIOUSLY ROUTED AND SEALED CRACK (TYPE B) SHALL INCLUDE REMOVING EXISTING SEALANT, RE-FACING WALLS AND RESEALING, SIMILAR TO ABOVE AND TO DETAIL 3 (C-30 | C-30)

CRACK REPAIR DETAIL

DETAIL 2 (C-11 | C-30)
NO SCALE

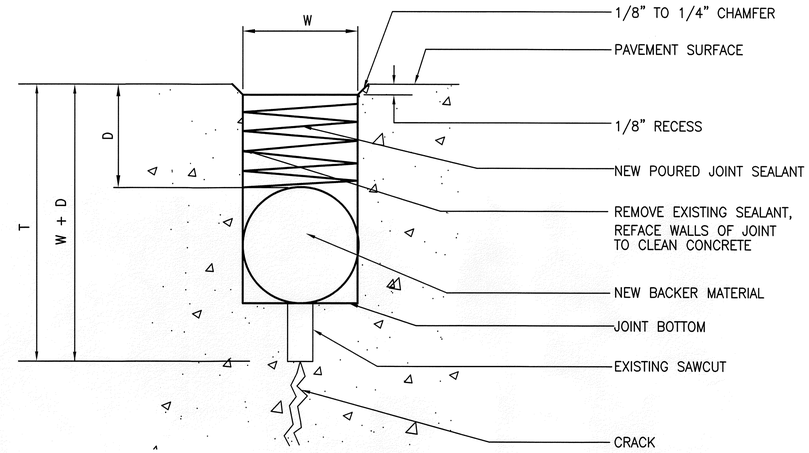

W= WIDTH OF SEALANT RESERVOIR (RE-SAWN EXISTING JOINT TO 3/8" MIN.)

D= DEPTH OF SEALANT(1.0 TO 1.5 X "W", & 1/2" MIN.)

T= DEPTH OF EXISTING INITIAL SAWCUT

W AND D VARY THROUGHOUT PROJECT. BASE BID ON THE FOLLOWING AVERAGES:
W = 1/2"
D = 3/4"

NOTE:
EXISTING JOINT WIDTH VARIES, 1/4" MIN., AVERAGE WIDTH = 1/2"±

JOINT SEALANT REPLACEMENT DETAIL

DETAIL 3 (C-11 | C-30)
NO SCALE

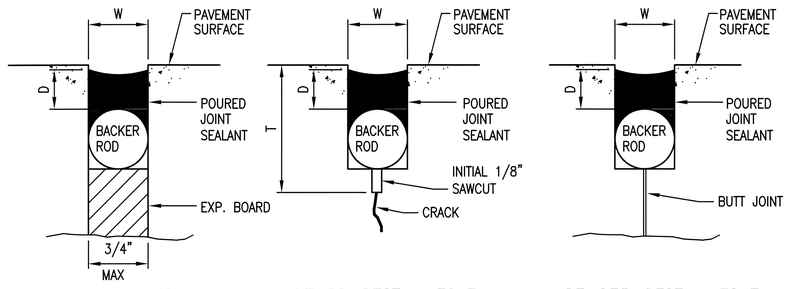

EXPANSION JOINT | CONTRACTION JOINT | CONSTRUCTION JOINT

NOTES:

1) W = WIDTH OF SEALANT RESERVOIR (MIN = 1/2", MAX = 5/8").
2) D = DEPTH OF SEALANT. 1.0 TO 1.5 X W FOR POURED SEALANT. 0.5 X W FOR SILICONE SEALANT
3) T = DEPTH OF INITIAL SAWCUT TYPE JOINT FORMER (CONTRACTION JOINT).
   T = 1/6 SLAB THICKNESS FOR PAVEMENTS MORE THAN 18" THICK.
4) DIAMETER OF BACKER MATERIAL = W + 1/8".
5) TOP OF SEALANT SHALL BE 1/4" TO 1/16" BELOW TOP OF PVMT.
6) JOINT SEALANT MATERIAL SHALL BE ONE OF THE FOLLOWING:
   A) ASTM D 116 HOT APPLIED JET FUEL RESISTANT SEALANT
   B) FED SPEC SS-S-200 TWO-COMPONENT COLD-APPLIED FUEL-RESISTANT SEALANT.

POURED JOINT SEALANT DETAILS FOR AIRCRAFT RIGID PAVEMENT

DETAIL 4 (C-11 | C-30) C-35
NO SCALE

REGISTERED PROFESSIONAL ENGINEER — JONATHAN E. BERGSTROM — NO. 60229 — EXP. 6/30/12 — CIVIL — STATE OF CALIFORNIA

JBY #0622-10

JB YOUNG & ASSOCIATES
CONSULTANT ENGINEERS
11440 RIVERSIDE DRIVE, SUITE M
LAKESIDE, CA 92040

DATE	SYM	REVISION	BY	A'PD

NATIONAL AERONAUTICS AND SPACE ADMINISTRATION
DRYDEN FLIGHT RESEARCH CENTER
EDWARDS, CA

DRAWING TITLE
DETAILS

PROJECT TITLE
REPAIR FLIGHTLINE ACCESS ROADS & AIRCRAFT RAMPS–DFRC, PHASE 1 OF 2
100% FINAL DESIGN

APPROVALS	DATE
Chief, Facilities Engineering & Assessment Office	3-7-11
Project Manager	1-4-11
Facility Manager	1/5/11
Project Requestor/Customer	1/4/11
Safety, Health & Environmental	1/6/11
Office of Protective Services	1/4/11
Office of the CIO	1/5/11

DATE STRTD	7-29-09	DATE PRNTD	12-7-10
DRAWN BY	JFB		EDM-1706
SCALE	GRAPHIC	TRADE SH. No. C-30	
FILE NAME		SHEET No. 37 of 43	

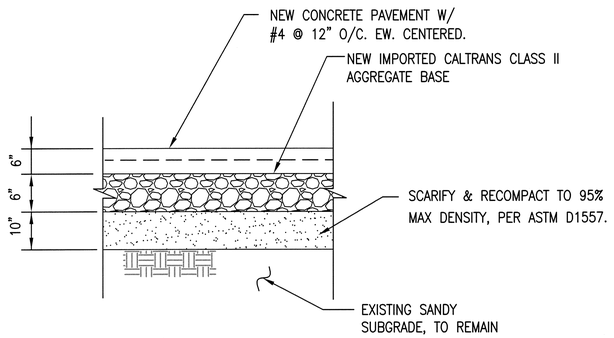

NEW 6" THICK CONCRETE PAVEMENT

DETAIL 1 — NO SCALE — C-11 | C-31

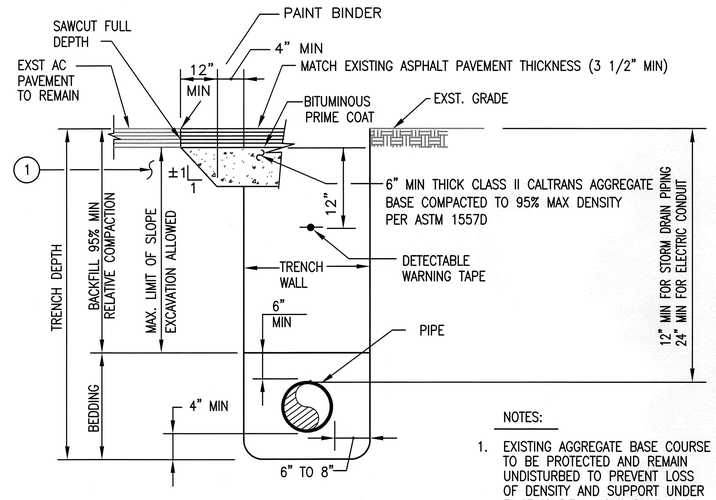

NOTES:

1. EXISTING AGGREGATE BASE COURSE TO BE PROTECTED AND REMAIN UNDISTURBED TO PREVENT LOSS OF DENSITY AND SUPPORT UNDER EXISTING BITUMINOUS PAVEMENT.

TYPICAL UTILITY TRENCH

DETAIL 3 — NO SCALE — C-14 | C-31 — C-28

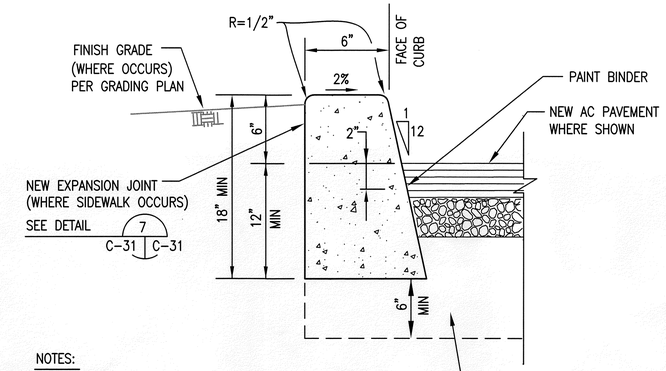

NOTES:

1. EXPANSION & WEAKENED PLANE JOINTS NOT SHOWN ON PLANS SHALL BE LOCATED AS LISTED BELOW:
2. EXPANSION JOINTS AT 20' INTERVALS (MAX.) AND AT JUNCTIONS WITH OTHER WALKS AND SLABS. SEE DETAIL 7 C-31 | C-31
3. WEAKENED PLANE JOINTS AT 5' INTERVALS (MAX). SEE DETAIL 7 C-31 | C-31

6" CONCRETE CURB

DETAIL 5 — NO SCALE — C-14 | C-31 — C-15, C-32

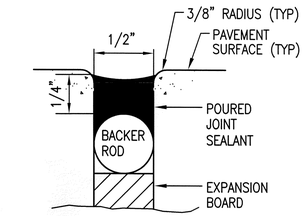

EXPANSION JOINT

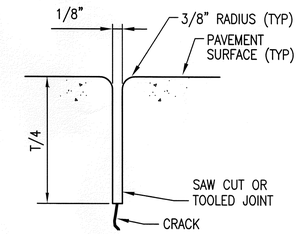

WEAKENED PLANE JOINT

1) DIAMETER OF BACKER MATERIAL = W + 1/8"
2) TOP OF SEALANT SHALL BE 1/4" TO 1/16" BELOW TOP OF PVMT.
3) T=PAVEMENT OR SIDEWALK THICKNESS.

PAVEMENT JOINTS

DETAIL 7 — NO SCALE — C-34 | C-31 — C-31, C-32, C-34

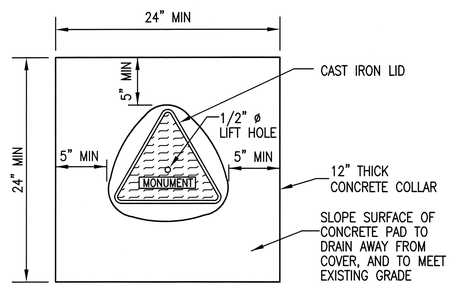

PLAN

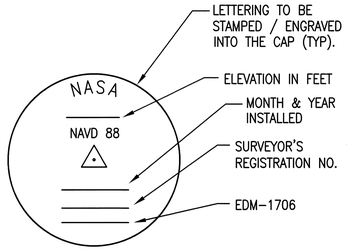

PLAN

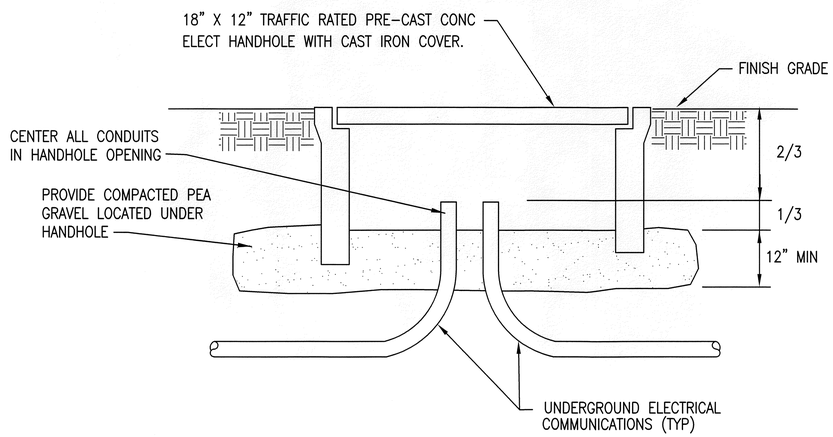

ELECTRIC PULL BOX

DETAIL 4 — NO SCALE — C-14 | C-31

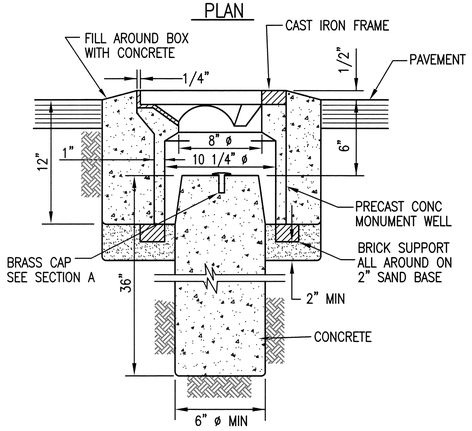

SECTION – MONUMENT WELL

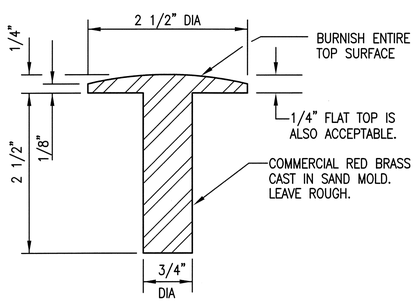

SECTION A – BRASS CAP

NOTE: INSTALL NEW BRASS DISK IN THE SAME EXACT HORIZONTAL COORDINATES AS EXISTING.

SURVEY CONTROL MONUMENT

DETAIL 2 — NO SCALE — C-13 | C-31 — C-14, C-15, C-16, C-17, C-31

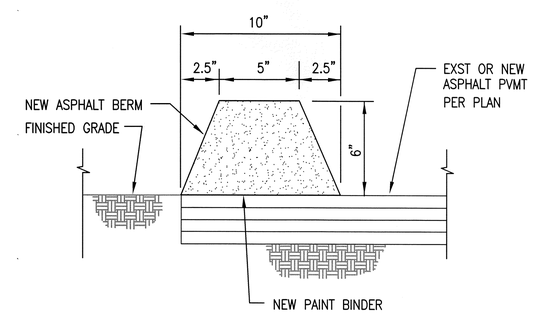

ASPHALT BERM

DETAIL 6 — SCALE: NONE — C-14 | C-31 — C-27

REGISTERED PROFESSIONAL ENGINEER — JONATHAN E. BERGMANN — NO. 60229 — EXP. 6/30/12 — CIVIL — STATE OF CALIFORNIA

JBY #0622-10

JB YOUNG & ASSOCIATES
CONSULTANT ENGINEERS
11440 RIVERSIDE DRIVE, SUITE M
LAKESIDE, CA 92040

DATE	SYM	REVISION	BY	A'PD

NATIONAL AERONAUTICS AND SPACE ADMINISTRATION
DRYDEN FLIGHT RESEARCH CENTER
EDWARDS, CA

DRAWING TITLE: DETAILS

PROJECT TITLE: REPAIR FLIGHTLINE ACCESS ROADS & AIRCRAFT RAMPS–DFRC, PHASE 1 OF 2
100% FINAL DESIGN

APPROVALS	DATE
Chief, Facilities Engineering & Asset Mgmt. Office	3-7-11
Project Manager	1-4-11
Facility Manager	1/5/11
Project Requestor (Customer)	1/4/11
Safety, Health & Environmental	1/6/11
Office of Protective Services	1/4/11
Office of the CIO	1/5/11

DATE STRTD	7-29-09	DATE PRNTD	12-7-10
DRAWN BY	JFB		EDM-1706
SCALE	GRAPHIC	TRADE SH. No.	C-31
FILE NAME		SHEET No.	38 of 43

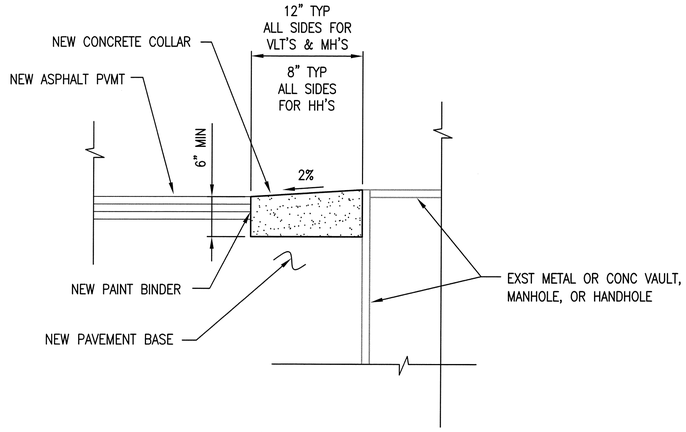

CONCRETE COLLAR

DETAIL 1
SCALE: NONE
C-15 | C-32
C-16
C-17
C-32

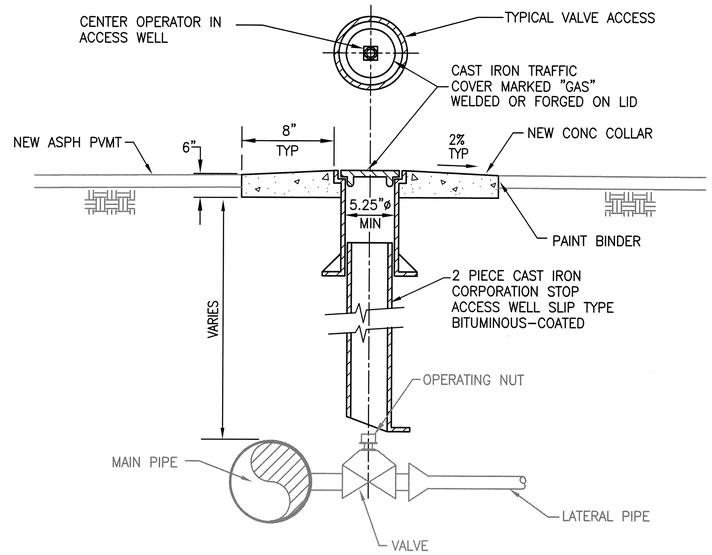

NEW VALVE WELL

DETAIL 2
SCALE: NONE
C-15 | C-32

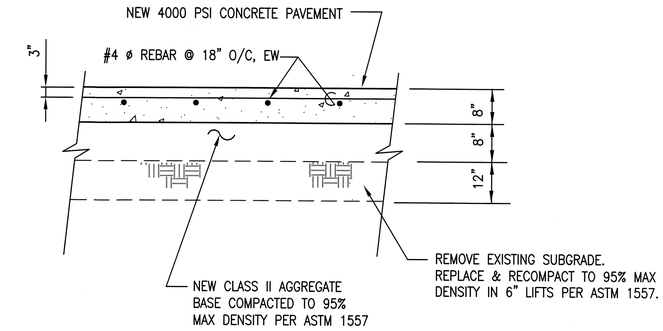

NOTES:

1) CONTRACTOR SHALL REMOVE & DISPOSE OF EXISTING DIRT SUBGRADE, AS REQUIRED TO INSTALL NEW CONCRETE PAVEMENT & AGGREGATE BASE AND MAINTAIN EXISTING GRADES.

2) SEE CONCRETE JOINT PLAN FOR NEW JOINT INFORMATION.

NEW CONCRETE PAVEMENT

DETAIL 3
SCALE: NONE
C-16 | C-32
C-15

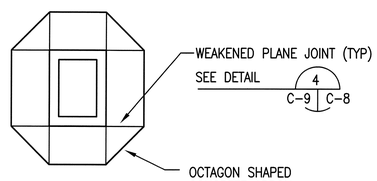

PLAN

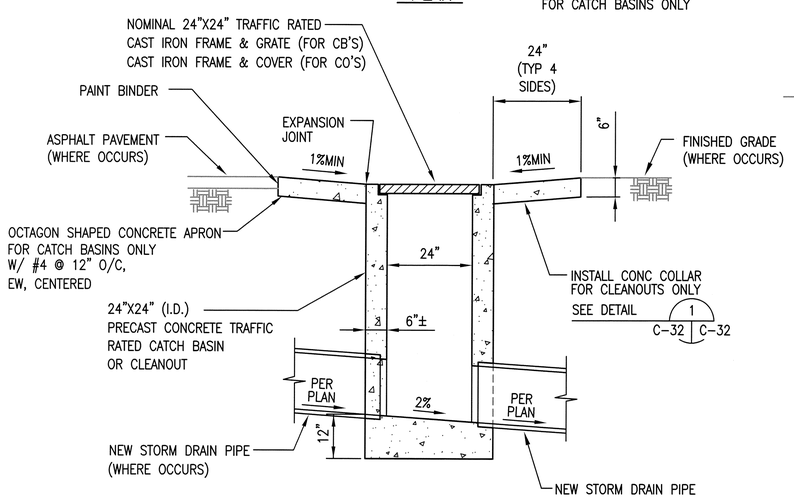

SECTION

STORM DRAIN CATCH BASIN OR CLEANOUT

DETAIL 5
NO SCALE
C-27 | C-32

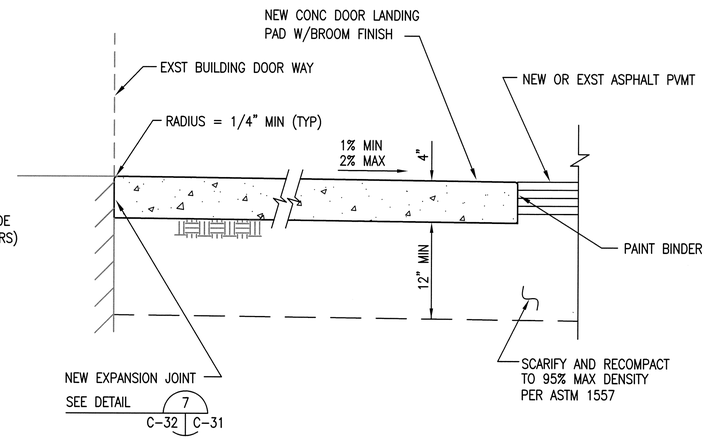

NEW CONCRETE DOOR LANDING PAD

DETAIL 4
NO SCALE
C-16 | C-32
C-15

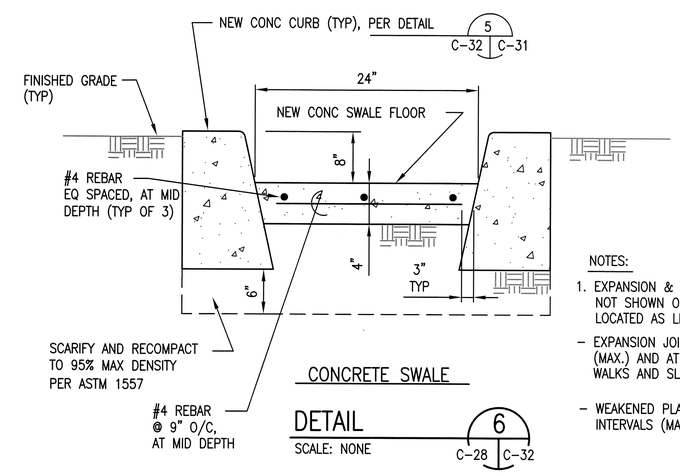

CONCRETE SWALE

DETAIL 6
SCALE: NONE
C-28 | C-32

NOTES:

1. EXPANSION & WEAKENED PLANE JOINTS NOT SHOWN ON PLANS SHALL BE LOCATED AS LISTED BELOW:
   - EXPANSION JOINTS AT 20'-0" INTERVALS (MAX.) AND AT JUNCTIONS WITH OTHER WALKS AND SLABS. SEE DETAIL 7 C-32 | C-31
   - WEAKENED PLANE JOINTS AT 5'-0" INTERVALS (MAX). SEE DETAIL 7 C-32 | C-31

REGISTERED PROFESSIONAL ENGINEER
JONATHAN F. BERNACCHI
NO. 60229
EXP. 6/30/12
CIVIL
STATE OF CALIFORNIA

JBY #0622-10

JB YOUNG & ASSOCIATES
CONSULTANT ENGINEERS
11440 RIVERSIDE DRIVE, SUITE M
LAKESIDE, CA 92040

DATE	SYM	REVISION	BY	A'PD

NATIONAL AERONAUTICS AND SPACE ADMINISTRATION
DRYDEN FLIGHT RESEARCH CENTER
EDWARDS, CA

DRAWING TITLE
DETAILS

PROJECT TITLE
REPAIR FLIGHTLINE ACCESS ROADS & AIRCRAFT RAMPS-DFRC, PHASE 1 OF 2
100% FINAL DESIGN

APPROVALS	DATE
Chief, Facilities Engineering & Asset Mgmt. Office	3-7-11
Project Manager	1-4-11
Facility Manager	1/5/11
Project Requestor (Customer)	1/4/11
Safety, Health & Environmental	1/6/11
Office of Protocol Security	1/4/11
Office of Info CIO	1/5/11

DATE STRTD	7-29-09	DATE PRNTD	12-7-10
DRAWN BY	JFB		EDM-1706
SCALE	GRAPHIC	TRADE Sht. No. C-32	SHEET No. 39 of 43
FILE NAME			

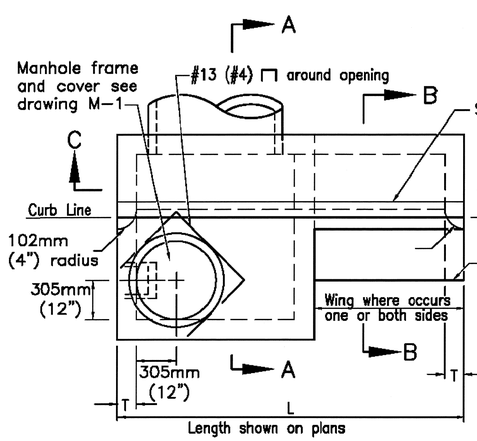

PLAN

Transition to normal curb height in 3m (10') on both sides unless otherwise noted

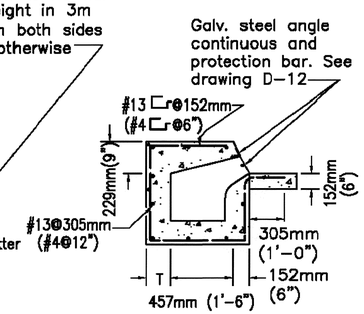

SECTION B-B

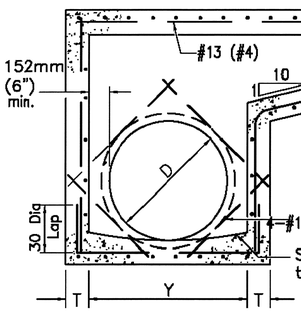

Determined by pipe size—1.22m (4') min., 2.44m (8')max.

SECTION C-C

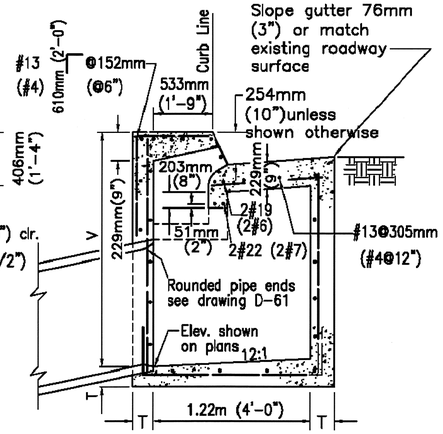

SECTION A-A

NOTES

1. DETAIL SOURCE = CITY OF SAN DIEGO STANDARD DRAWING D-1.
2. Types are designated as follows: (no wing)A, (one wing)A-1, (two wings)A-2.
3. Exposed edges of concrete shall be rounded with a radius of 13mm (1/2").
4. When V exceeds 4' steps shall be installed. See Standard Drawing D-11 for details.
5. Concrete gutter to match adjacent gutters.
6. An expansion joint shall be placed at the ends of the inlet where the curb is to adjoin.
7. Provide 6.35mm (1/4") tooled groove in top slab in line with back of adjacent curb.
8. Surface of top slab shall be sidewalk finished to drain toward street at a slope of 6.35mm (1/4") per foot.
9. Maintain 38mm (1-1/2") clear spacing between reinforcing and surface unless otherwise noted.

LEGEND ON PLANS

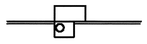

GENERAL NOTES:

1) INSTALL CURB INLET CATCH BASIN TYPE A-1 WITH 5' LONG WING WALL.
2) FOR ADDITIONAL NOTES AND DETAILS, SEE 1 C-33 C-36; 2 C-33 C-36; 3 C-33 C-36

CURB INLET CATCH BASIN

DETAIL 1 C-28 C-33
NO SCALE

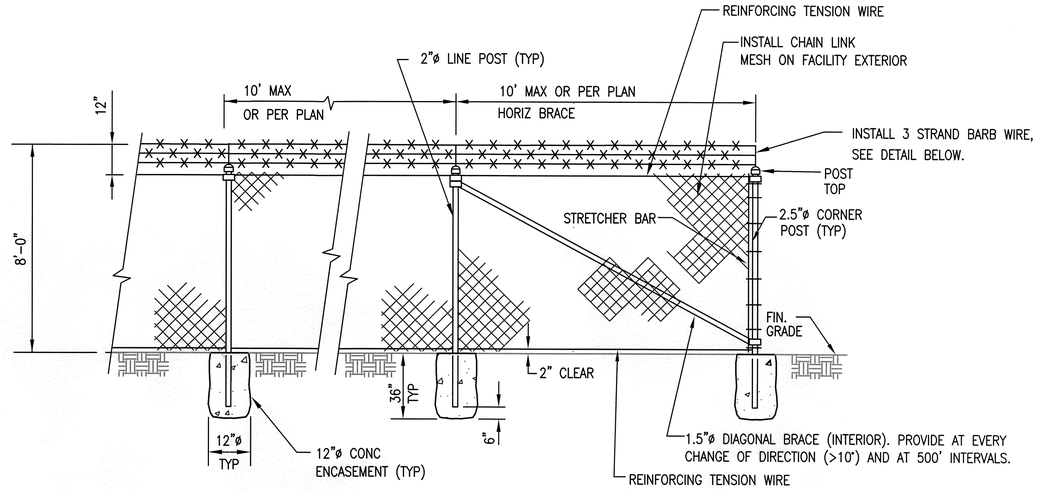

ELEVATION – FENCING AND PEDESTRIAN GATE

NOTE:
1) USE CLASS I GALV STEEL PIPE GRADE A OR B FOR POSTS, TOP RAILS, AND BRACES.
2) USE TYPE I ZINC COATED STEEL 6 GAGE WIRE SIZE WITH 2" MESH SIZE FOR CHAIN LINK MESH.
3) ALL PIPE DIAMETERS SHOWN ARE OUTSIDE DIAMETER.
4) NEW FENCE POSTS SHALL BE A MINIMUM OF 18" CLEAR OF EXISTING OR NEW UTILITIES.

DETAIL 2 C-28 C-33
NO SCALE

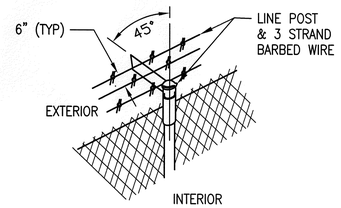

BARBED WIRE

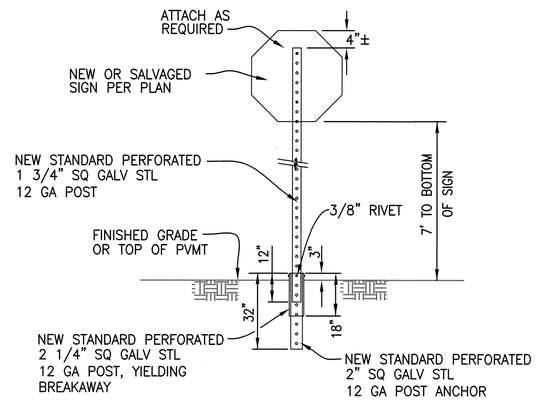

NOTE: BREAKAWAY POST SYSTEM TO BE GALVANIZED PER ASTM A525

INSTALL NEW SIGN

DETAIL 3 C-28 C-33
NO SCALE

REGISTERED PROFESSIONAL ENGINEER JONATHAN F. GERLACH NO. 60229 EXP. 6/30/12 CIVIL STATE OF CALIFORNIA

JBY #0622-10

JB YOUNG & ASSOCIATES
CONSULTANT ENGINEERS
11440 RIVERSIDE DRIVE, SUITE M
LAKESIDE, CA 92040

DATE	SYM	REVISION	BY	A'PD

NATIONAL AERONAUTICS AND SPACE ADMINISTRATION
DRYDEN FLIGHT RESEARCH CENTER
EDWARDS, CA

DRAWING TITLE
DETAILS

PROJECT TITLE
REPAIR FLIGHTLINE ACCESS ROADS & AIRCRAFT RAMPS-DFRC, PHASE 1 OF 2
100% FINAL DESIGN

APPROVALS	DATE
Chief, Facilities Engineering & Asset Mgmt. Office	3-7-11
Project Manager	1-4-11
Facility Manager	1/5/11
Project Inspector/Customer	1/4/11
Safety, Health & Environmental	1/6/11
Office of Protective Services	1/4/11
Office of the CIO	1/5/11

DATE STRTD	7-29-09	DATE PRNTD	12-7-10
DRAWN BY	JFB		EDM-1706
SCALE	GRAPHIC	TRADE SH. No. C-33	
FILE NAME			SHEET No. 40 of 43

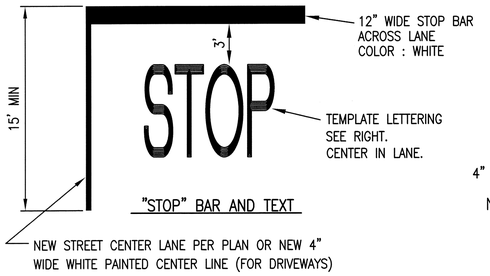

"STOP" BAR AND TEXT

DETAIL 1 (C-26 | C-34)
NO SCALE

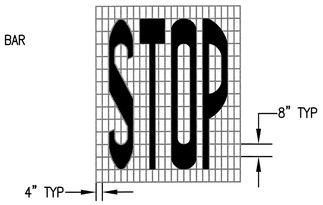

NOTE: PAINT LETTERING SOLID WHITE

PAINTED 'STOP' LETTERING

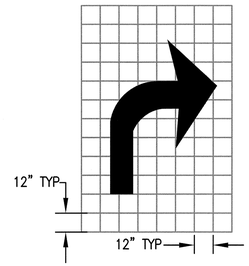

PAINTED TURN ARROW

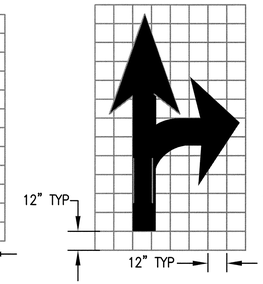

PAINTED COMBINATION ARROW

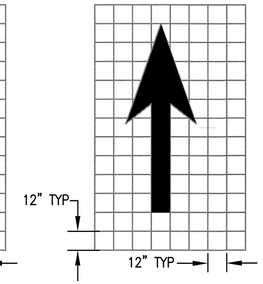

PAINTED ARROW

NOTE: PAINT ARROW SOLID WHITE

DETAIL 2 (C-26 | C-34)
NO SCALE

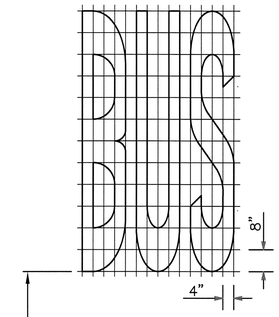

A=20 sq ft

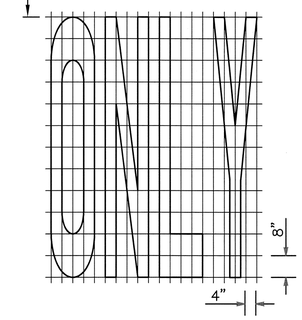

A=22 sq ft

DETAIL SOURCE = CALTRANS STANDARD PLANS A24E.

BUS ONLY STRIPING

DETAIL 9 (C-26 | C-34)
NO SCALE

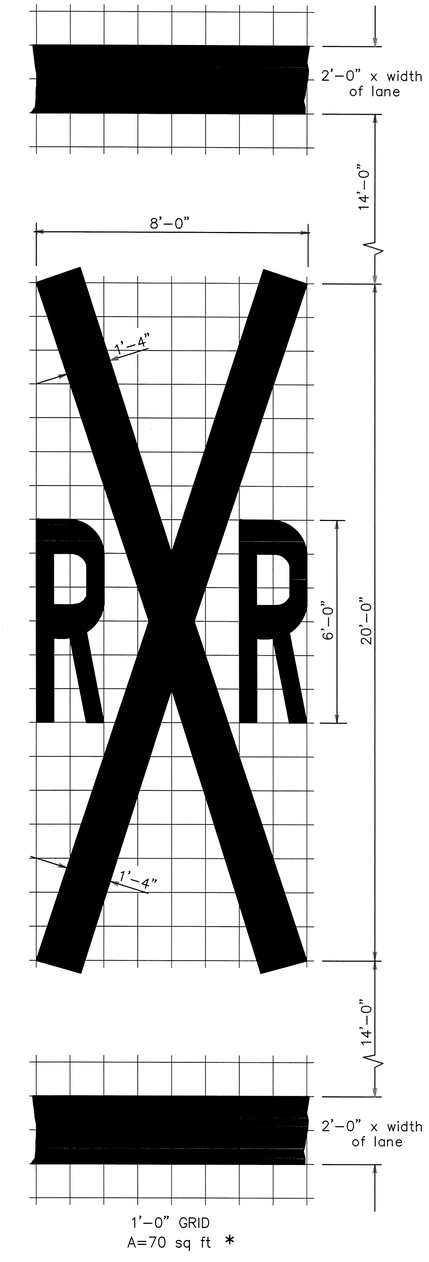

1'-0" GRID
A=70 sq ft *

DETAIL SOURCE = CALTRANS STANDARD PLANS A24C.

* 70 sq ft DOES NOT INCLUDE THE 2'-0" x VARIABLE WIDTH TRANSVERSE LINES.

RAILROAD CROSSING SYMBOL

DETAIL 8 (C-26 | C-34)
NO SCALE

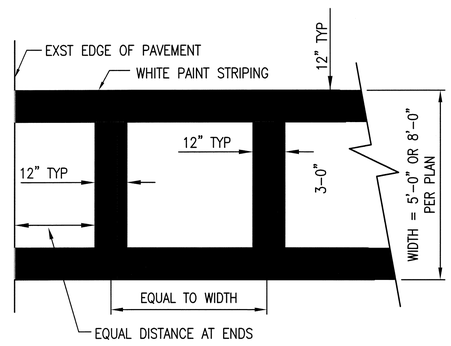

PAINTED CROSSWALK

DETAIL 4 (C-26 | C-34)
NO SCALE

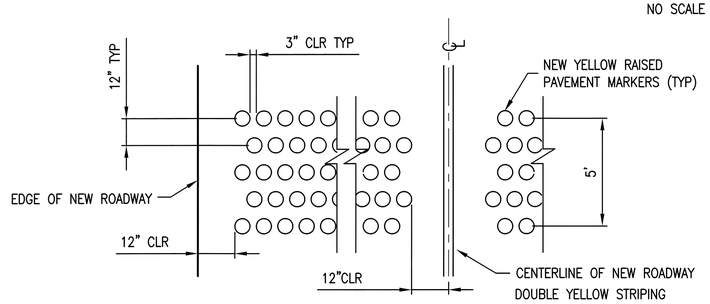

TIRE RUMBLE STRIPS

DETAIL 5 (C-26 | C-34)
NO SCALE

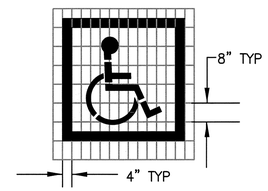

NOTE: PAINT SYMBOL SOLID BLUE.
ALIGN WITH CENTER AND END OF STALL.

HANDICAPPED PARKING SYMBOL

DETAIL 3 (C-26 | C-34)
NO SCALE

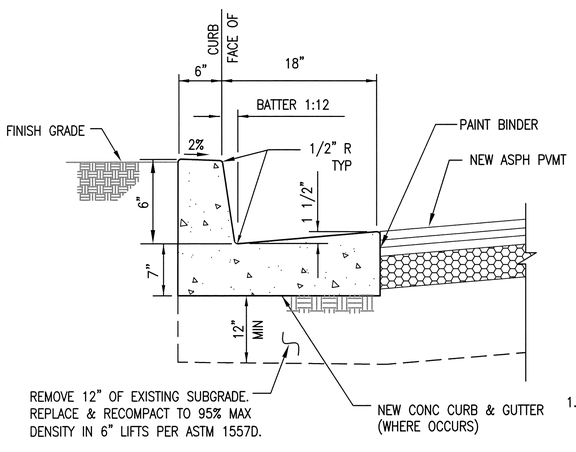

NEW CONCRETE CURB & GUTTER

DETAIL 7 (C-15 | C-34)
NO SCALE

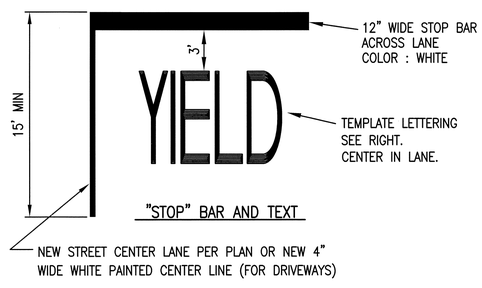

"STOP" BAR AND TEXT

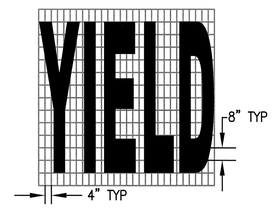

NOTE: PAINT TEXT SOLID WHITE

PAINTED 'YIELD' LETTERING

DETAIL 6 (C-26 | C-34)
NO SCALE

NOTES:

1. EXPANSION & WEAKENED PLANE JOINTS NOT SHOWN ON PLANS SHALL BE LOCATED AS LISTED BELOW:
   - EXPANSION JOINTS AT 20' INTERVALS (MAX.) AND AT JUNCTIONS WITH OTHER WALKS AND SLABS. SEE DETAIL 7 (C-34 | C-31)
   - WEAKENED PLANE JOINTS AT 5' INTERVALS (MAX). SEE DETAIL 7 (C-34 | C-31)

REGISTERED PROFESSIONAL ENGINEER
JOSHUA L. BRANCH
NO. 60229
EXP. 6/30/12
CIVIL
STATE OF CALIFORNIA

JBY #0622-10

JB YOUNG & ASSOCIATES
CONSULTANT ENGINEERS
11440 RIVERSIDE DRIVE, SUITE M
LAKESIDE, CA 92040

DATE	SYM	REVISION	BY	A'PD

NATIONAL AERONAUTICS AND SPACE ADMINISTRATION
DRYDEN FLIGHT RESEARCH CENTER
EDWARDS, CA

DRAWING TITLE
DETAILS

PROJECT TITLE
REPAIR FLIGHTLINE ACCESS ROADS & AIRCRAFT RAMPS-DFRC, PHASE 1 OF 2
100% FINAL DESIGN

APPROVALS	DATE
Chief, Facilities Engineering & Asset Mgmt. Office	3-7-11
Project Manager	1-4-11
Facility Manager	1/5/11
Project Requestor/Customer	1/4/11
Safety, Health & Environmental	1/6/11
Office of Protective Services	1/4/11
Office of the CIO	1/5/11

DATE STRTD	7-29-09	DATE PRNTD	12-7-10
DRAWN BY	JFB	EDM-1706	
SCALE	GRAPHIC	TRADE SH. No. C-34	
FILE NAME		SHEET No. 41 of 43	

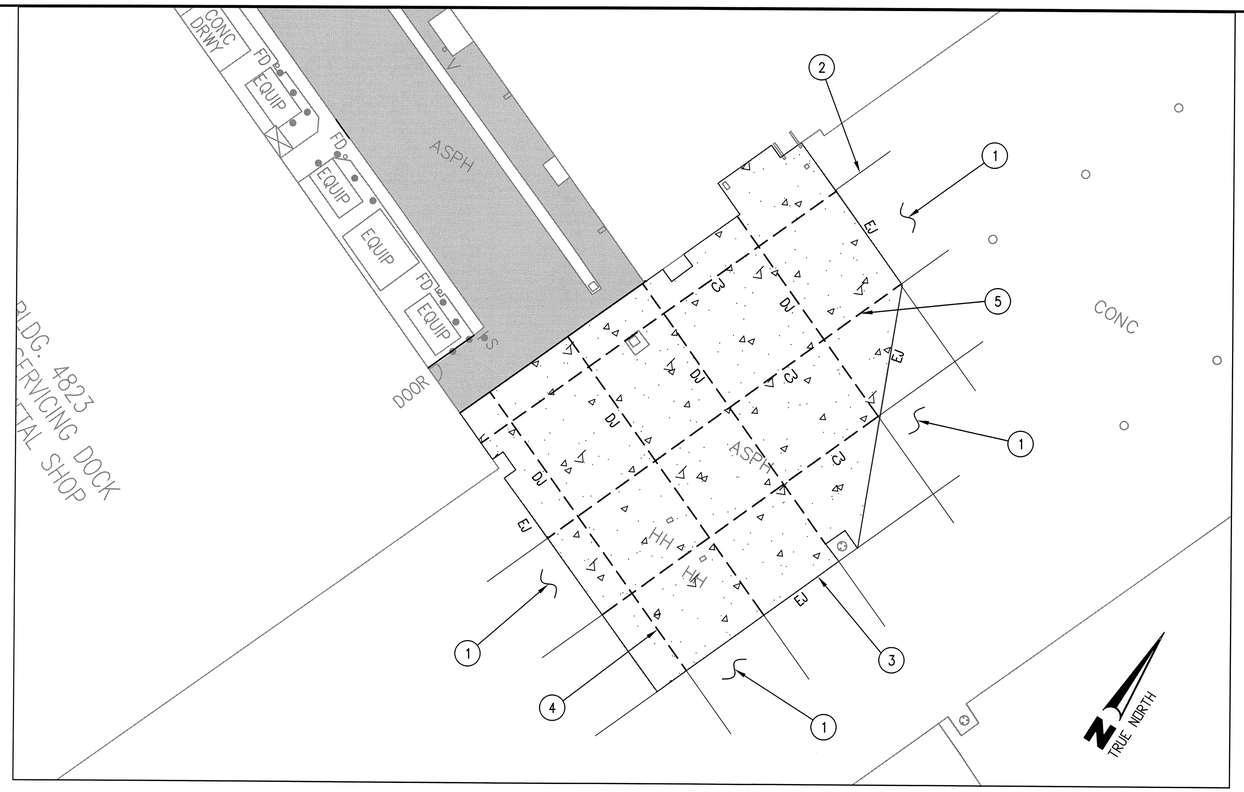

(XX) NOTES:

1) EXISTING CONCRETE PAVEMENT IS 16" THICK PER ASBUILT RECORDS.
2) EXISTING PAVEMENT JOINT (TYP)
3) NEW EXPANSION JOINT (EJ) AT EXST PAVEMENT EDGE – TYP, SEE DETAIL 4 / C-35 | C-35
4) NEW CONTRACTION JOINT (DJ) – TYP, SEE DETAIL 2 / C-35 | C-35
5) NEW CONSTRUCTION JOINT (CJ) – TYP, SEE DETAIL 3 / C-35 | C-35

GRAPHIC SCALE: 1"=20'

0 10' 20' 40' 60'

CONC PVMT JOINT PLAN (1 / C-16 | C-35)

1" = 20'

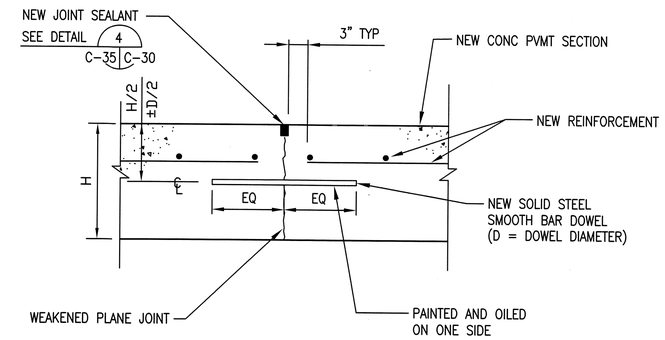

PAVEMENT THICKNESS H, INCHES	DOWEL SIZE AND SPACING – INCHES		
	DIAMETER – D SOLID SMOOTH BAR	LENGTH l	SPACING S
8" TO 11.5"	1"	20"	18"

CONTRACTION JOINT (DJ) – DOWELED TRANSVERSE

DETAIL 2 / C-35 | C-35

NO SCALE

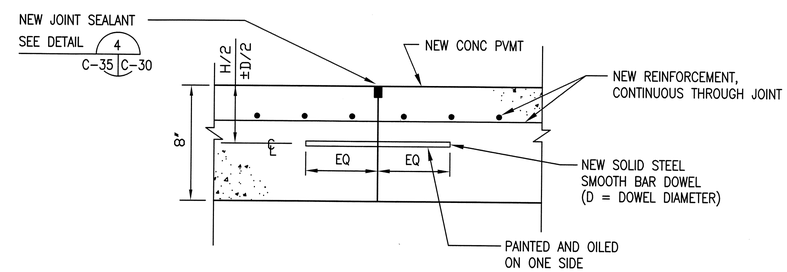

PAVEMENT THICKNESS H, INCHES	DOWEL SIZE AND SPACING – INCHES		
	DIAMETER – D SOLID SMOOTH BAR	LENGTH l	SPACING S
8" TO 11.5"	1"	20"	18"

CONSTRUCTION JOINT (CJ) – LONGITUDINAL

DETAIL 3 / C-35 | C-35

NO SCALE

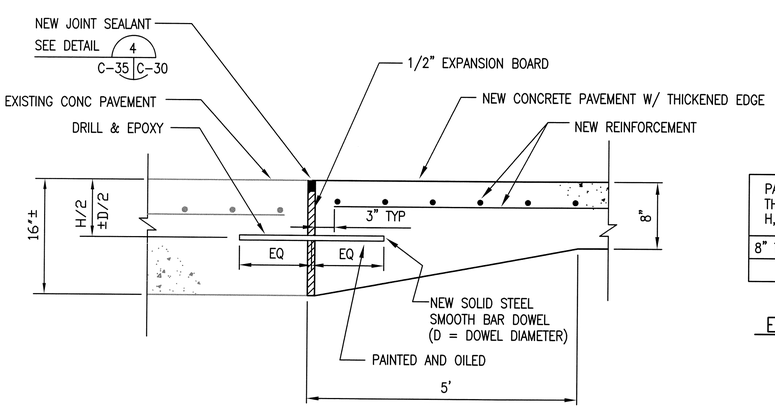

PAVEMENT THICKNESS H, INCHES	DOWEL SIZE AND SPACING – INCHES		
	DIAMETER – D SOLID SMOOTH BAR	LENGTH l	SPACING S
8" TO 11.5"	1"	20"	18"

EXPANSION JOINT (EJ) – DOWELED AT THICKENED EDGE

DETAIL 4 / C-35 | C-35

NO SCALE

REGISTERED PROFESSIONAL ENGINEER JONATHAN E. BERTCH NO. 60229 EXP. 6/30/12 CIVIL STATE OF CALIFORNIA

JBY #0622-10

JB YOUNG & ASSOCIATES
CONSULTANT ENGINEERS
11440 RIVERSIDE DRIVE, SUITE M
LAKESIDE, CA 92040

DATE	SYM	REVISION	BY	A'PD

NATIONAL AERONAUTICS AND SPACE ADMINISTRATION
DRYDEN FLIGHT RESEARCH CENTER
EDWARDS, CA

DRAWING TITLE: DETAILS

PROJECT TITLE: REPAIR FLIGHTLINE ACCESS ROADS & AIRCRAFT RAMPS–DFRC, PHASE 1 OF 2 100% FINAL DESIGN

APPROVALS	DATE
Chief, Facilities Engineering & Asset Mgmt. Office	3-7-11
Project Manager	1-4-11
Facility Manager	1/5/11
Project Requestor/Customer	1/4/11
Safety, Health & Environmental	1/6/11
Office of Protective Services	1/4/11
Office of the CIO	1/5/11

DATE STRTD	7-29-09	DATE PRNTD	12-7-10
DRAWN BY	JFB		EDM-1706
SCALE	GRAPHIC	TRADE SH. No.	C-35
FILE NAME		SHEET No.	42 of 43

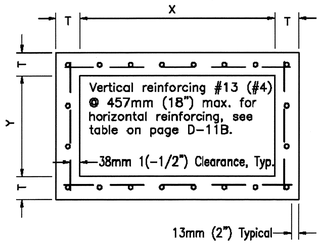

TYPICAL BOX SECTION

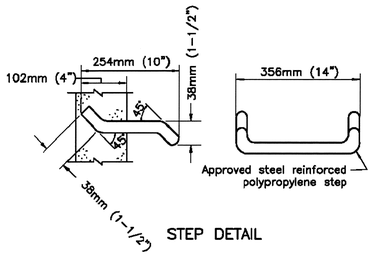

STEP DETAIL

NOTES

1. Concrete shall be 332kg/M³-C-22-Mpa (560-C-3250) unless otherwise noted.
2. Reinforcing steel shall comply with this drawing unless otherwise specified.
3. Reinforcing steel shall be intermediate grade deformed bars conforming to latest ASTM specifications.
4. Bends shall be in accordance with latest ACI code.
5. Minimum splice length for reinforcing shall be 30 diameters.
6. Floor shall have a wood trowel finish and, except where used as junction boxes, shall have a minimum slope of 1:12 toward the outlet.
7. Depth V is measured from the top of the structure to the flowline of the box.
8. Wall thickness and reinforcing steel required may be decreased in accordance with table above.
9. Wall thickness shall be stepped on the outside of the box.
10. When the structure depth V exceeds 1.21m (4'), steps shall be cast into the wall at 381mm (15") intervals from 381mm (15") above floor to within 305mm (12") of top of structure. Where possible place steps in wall without pipe opening, otherwise over opening of smallest diameter.
11. Alternate step may be an approved steel reinforced polypropylene step.
12. Upon approval of the Agency and the Engineer, as defined by Section 6703 of the Business and Professions Code, the use of precast storm structures is acceptable as an alternate to cast-in-place. Precast units shall conform to ASTM standards and be manufactured in a permanent facility designed for that purpose.

GENERAL NOTES:

DETAIL SOURCE = CITY OF SAN DIEGO STANDARD DRAWING D-11A.

CATCH BASIN INLET NOTES AND DETAILS

DETAIL 1 (C-33 | C-36)
NO SCALE

BOX SECTION REINFORCEMENT

MAXIMUM SPAN X or Y	DEPTH V	THICKNESS T	HOR. & FLR. REINF.
914mm (3'-0") to 1.22m (4'-0")	1.22m (4'-0")	152mm (6")	#13 (#4) @ 457mm (18")
1.24m (4'-1") to 2.13m (7'-0")		152mm (6")	#13 (#4) @ 305mm (12")
2.16m (7'-1") to 2.44m (8'-0")		152mm (6")	#13 (#4) @ 203mm (8")
914mm (3'-0") to 1.22m (4'-0")	1.24m to 2.44m (4'-1"to 8'-0")	152mm (6")	#13 (#4) @ 457mm (18")
1.24m (4'-1") to 1.52m (5'-0")		152mm (6")	#13 (#4) @ 305mm (12")
1.55m (5'-1") to 1.83m (6'-0")		152mm (6")	#13 (#4) @ 203mm (8")
1.85m (6'-1") to 2.44m (8'-0")		152mm (6")	#13 (#4) @ 152mm (6")
914mm (3'-0") to 1.22m (4'-0")	2.46m to 3.66m (8'-1" to 12'-0")	152mm (6")	#13 (#4) @ 381mm (15")
1.24m (4'-1") to 1.52m (5'-0")		203mm (8")	#13 (#4) @ 305mm (12")
1.55m (5'-1") to 1.83m (6'-0")		203mm (8")	#13 (#4) @ 203mm (8")
1.85m (6'-1") to 2.44m (8'-0")		203mm (8")	#13 (#4) @ 152mm (6")
914mm (3'-0") to 1.22m (4'-0")	3.68m to 4.88m (12'-1" to 16'-0")	203mm (8")	#13 (#4) @ 305mm (12")
1.24m (4'-1") to 1.52m (5'-0")		203mm (8")	#13 (#4) @ 305mm (12")
1.55m (5'-1") to 1.83m (6'-0")		203mm (8")	#13 (#4) @ 203mm (8")
1.85m (6'-1") to 2.13m (7'-0")		203mm (8")	#13 (#4) @ 152mm (6")
2.13m (7'-1") to 2.44m (8'-0")		203mm (8")	#13 (#5) @ 203mm (8")
914mm (3'-0") to 1.22m (4'-0")	4.90m to 6.10m (16'-1" to 20'-0")	203mm (8")	#13 (#4) @ 305mm (12")
1.24m (4'-1") to 1.52m (5'-0")		254mm (10")	#13 (#4) @ 305mm (12")
1.55m (5'-1") to 1.83m (6'-0")		254mm (10")	#13 (#4) @ 203mm (8")
1.85m (6'-1") to 2.13m (7'-0")		254mm (10")	#13 (#4) @ 152mm (6")
2.13m (7'-1") to 2.44m (8'-0")		254mm (10")	#13 (#5) @ 203mm (8")
914mm (3'-0") to 1.22m (4'-0")	6.12m to 7.32m (20'-1" to 24'-0")	203mm (8")	#13 (#4) @ 305mm (12")
1.24m (4'-1") to 1.52m (5'-0")		254mm (10")	#13 (#4) @ 305mm (12")
1.55m (5'-1") to 1.83m (6'-0")		254mm (10")	#13 (#4) @ 203mm (8")
1.85m (6'-1") to 2.13m (7'-0")		254mm (10")	#13 (#4) @ 152mm (6")
2.13m (7'-1") to 2.44m (8'-0")		305mm (12")	#13 (#5) @ 203mm (8")

GENERAL NOTES:

DETAIL SOURCE = CITY OF SAN DIEGO STANDARD DRAWING D-11B.

CATCH BASIN HORIZONTAL REINFORCEMENT NOTES

DETAIL 2 (C-33 | C-36)
NO SCALE

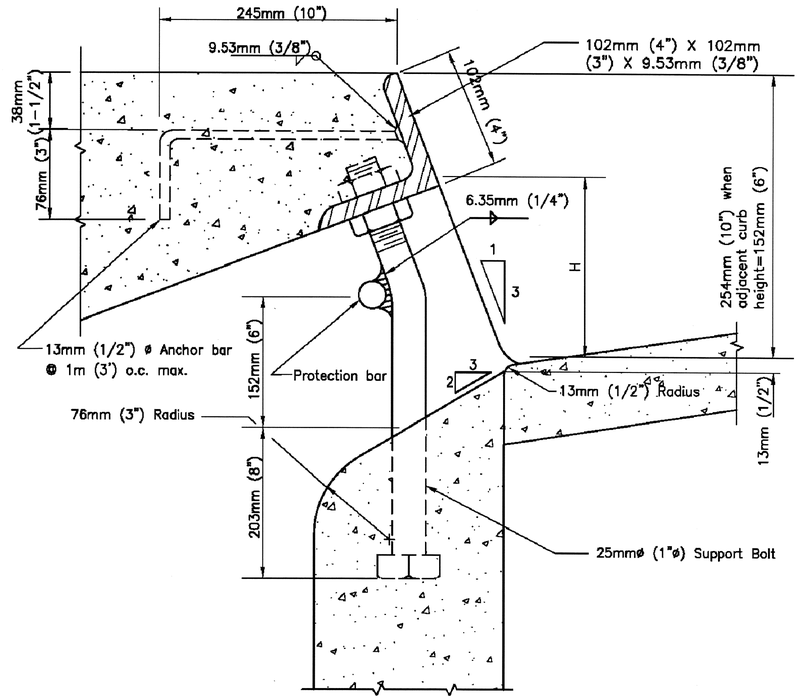

NOTES

1. Face angle shall be cast into structure continuous for the full length "L".
2. All exposed metal parts shall be hot-dipped galvanized after fabrication.
3. When curb inlet opening height (H) exceeds 152mm (6") install 25mm (1"ø) steel protection bar.
4. Install additional bars at 89mm (3-1/2") clear spacing above first bar when opening exceeds 330mm (13").
5. When curb inlet opening length exceeds 2.44m (8') install 25mm (1"ø) steel support bolts, spaced at not more than 1.52m (5') o.c.

GENERAL NOTES:

DETAIL SOURCE = CITY OF SAN DIEGO STANDARD DRAWING D-12.

CURB INLET OPENING DETAIL

DETAIL 3 (C-33 | C-36)
NO SCALE

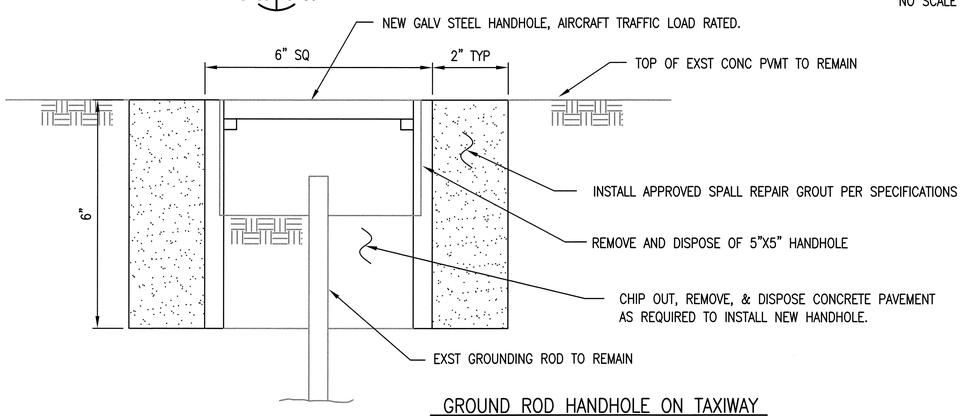

GROUND ROD HANDHOLE ON TAXIWAY

DETAIL 4 (C-11 | C-36)
NO SCALE

REGISTERED PROFESSIONAL ENGINEER
JOVOHAN BERLANCHI
NO. 60229
EXP. 6/30/12
CIVIL
STATE OF CALIFORNIA

JBY #0622-10

JB YOUNG & ASSOCIATES
CONSULTANT ENGINEERS
11440 RIVERSIDE DRIVE, SUITE M
LAKESIDE, CA 92040

DATE	SYM	REVISION	BY	A'PD

NATIONAL AERONAUTICS AND SPACE ADMINISTRATION
DRYDEN FLIGHT RESEARCH CENTER
EDWARDS, CA

DRAWING TITLE
DETAILS

PROJECT TITLE
REPAIR FLIGHTLINE ACCESS ROADS & AIRCRAFT RAMPS-DFRC, PHASE 1 OF 2
100% FINAL DESIGN

APPROVALS	DATE
Chief, Facilities Engineering & Asset Mgmt. Office	3-7-11
Project Manager	1-4-11
Facility Manager	1/5/11
Project Requestor/Customer	1/4/11
Safety, Health & Environmental	1/6/11
Office of Protocol Services	1/4/11
Office of the CIO	1/5/11

DATE STRTD	7-29-09	DATE PRINTD	12-7-10
DRAWN BY	JFB		EDM-1706
SCALE	GRAPHIC	TRADE SH. No. C-36	
FILE NAME		SHEET No. 43 of 43	