FOR ANY PURPOSE OTHER THAN IN CONNECTION WITH A DEFINITELY RELATED GOVERNMENT PROCUREMENT OPERATION, THE UNITED STATES GOVERNMENT THEREBY INCURS NO RESPONSIBILITY NOR ANY OBLIGATION WHATSOEVER; AND THE FACT THAT THE GOVERNMENT MAY HAVE FORMULATED, FURNISHED, OR IN ANY WAY SUPPLIED THE SAID DRAWINGS, SPECIFICATIONS OR ANY OTHER DATA IS NOT TO BE REGARDED BY IMPLICATION OR OTHERWISE IN ANY MANNER LICENSING THE HOLDER OR ANY OTHER PERSONS OR CORPORATION, OR CONVEYING ANY RIGHTS OR PERMISSION TO MANUFACTURE, USE, OR SELL ANY PATENTED INVENTION THAT IN ANY WAY BE RELATED THERETO.

EAR 99 – NO LICENSE REQUIRED

The Information contained in this document is technical in content, but not technical data as defined by the International Traffic in Arms Regulations (ITAR) or the Export Administration Regulations (EAR), and therefore is EAR 99 NLR, no export license required, suitable for public release. (General Prohibition Six (Embargo) applies to all items subject to the EAR, i.e. items on the CCL and within EAR 99 NLR.. You may not make an export or reexport contrary to the provisions of part 746 (Embargos and Other Special Controls) of the EAR and 22 CFR part 126.1 of the ITAR).

EDDR # 113043 - NASA KSC Export Control Office (321- 867- 6039)

EAR 99

ASSEMBLY — MPPU REFURBISHMENT DESIGN ENVIRONMENTAL CONTROL SYSTEM

INDEX

DRAWING	TITLE	REV	DATE	STATUS
V				
V-1	TITLE & INDEX	-	5/6/2011	
V-1A	MODIFICATION DETAILS	-	5/6/2011	
V-2	SYSTEM MECHANICAL SCHEMATIC / SMS	-	5/6/2011	
V-2A	HYDRONIC SCHEMATIC	-	5/6/2011	
V-2B	REFRIGERATION PIPING SCHEMATIC	-	5/6/2011	
V-3	REAR PERSPECTIVE LOUVER LAYOUT	-	5/6/2011	
V-4	FRONT PERSPECTIVE LOUVER LAYOUT	-	5/6/2011	

INDEX

DRAWING	TITLE	REV	DATE	STATUS
STRUCTURAL				
S-1	STRUCTURAL FRAMING	-	5/6/2011	
S-2	STRUCTURAL FRAMING	-	5/6/2011	REFERENCE
S-3	STRUCTURAL FRAMING	-	5/6/2011	
S-4	STRUCTURAL FRAMING	-	5/6/2011	REFERENCE
S-5	STRUCTURAL FRAMING	-	5/6/2011	REFERENCE
S-6	STRUCTURAL FRAMING	-	5/6/2011	
S-7	STRUCTURAL FRAMING	-	5/6/2011	
S-8	STRUCTURAL FRAMING	-	5/6/2011	REFERENCE
S-9	STRUCTURAL FRAMING	-	5/6/2011	
S-9A	MISC SHEET METAL DETAILS	-	5/6/2011	REFERENCE
S-10	STRUCTURAL FRAMING	-	5/6/2011	REFERENCE
S-10A	MISC SHEET METAL DETAILS	-	5/6/2011	REFERENCE
S-11	STRUCTURAL FRAMING	-	5/6/2011	REFERENCE
S-11A	MISC SHEET METAL DETAILS	-	5/6/2011	REFERENCE
S-12	DESIGN LOADS	-	5/6/2011	REFERENCE

INDEX

DRAWING	TITLE	REV	DATE	STATUS
MECHANICAL				
M-1	GENERAL NOTES	-	5/6/2011	
M-1A	"A" NUMBER COMPONENT LIST	-	5/6/2011	
M-1B	"A" NUMBER COMPONENT LIST CONTINUED	-	5/6/2011	
M-1C	"A" NUMBER COMPONENT LIST CONTINUED	-	5/6/2011	
M-2	PLAN VIEW	-	5/6/2011	
M-2A	HANGER DETAILS	-	5/6/2011	
M-3	RIGHT SIDE VIEW	-	5/6/2011	
M-4	LEFT SIDE VIEW	-	5/6/2011	
M-4B	CONDENSER GEOMETRY	-	5/6/2011	
M-5	END VIEWS	-	5/6/2011	
M-5B	FLAT PANEL DETAILS	-	5/6/2011	REFERENCE
M-6	PLAN VIEW WITHOUT CONDENSERS	-	5/6/2011	
M-7	INTAKE FILTER PLENUM	-	5/6/2011	REFERENCE
M-8	DUCT DETAILS	-	5/6/2011	REFERENCE
M-9	PLENUM ISOMETRIC	-	5/6/2011	
M-9A	CONDENSATE DRAIN ISOMETRIC	-	5/6/2011	
M-9B	TEMPLATES, COILS	-	5/6/2011	REFERENCE
M-9C	EVAPORATOR COIL ASSEMBLY	-	5/6/2011	
M-9D	HEAT ABSORPTION COIL ASSEMBLY	-	5/6/2011	
M-9E	OUTLET #1 REHEAT COIL	-	5/6/2011	
M-10	INTAKE PLENUM DETAILS	-	5/6/2011	REFERENCE
M-11	SECTIONS & DETAILS	-	5/6/2011	REFERENCE
M-11A	SCREEN & SPACER DETAILS	-	5/6/2011	REFERENCE
M-11B	CONDENSATE DRAIN DETAILS	-	5/6/2011	REFERENCE
M-12	FILTER PRESSURE HOUSING ASSEMBLY	-	5/6/2011	REFERENCE
M-12A	FILTER PRESSURE HOUSING	-	5/6/2011	REFERENCE
M-12B	FILTER HOUSING DETAILS	-	5/6/2011	REFERENCE
M-13	BAFFLE PLATE WELDMENT ASSY	-	5/6/2011	REFERENCE
M-14	HEATER TRANSITION DETAILS	-	5/6/2011	REFERENCE
M-15	DUCTING DETAILS	-	5/6/2011	REFERENCE
M-15A	DUCTING DETAILS	-	5/6/2011	REFERENCE
M-15B	BRACKETS & MACHINED PARTS	-	5/6/2011	REFERENCE
M-15C	ACCESS DOORS	-	5/6/2011	REFERENCE
M-15D	BULKHEAD DETAILS	-	5/6/2011	REFERENCE
M-16	FLANGE & SUPPORT DETAILS	-	5/6/2011	REFERENCE
M-16A	MISC SHEET METAL DETAILS	-	5/6/2011	
M-16B	PLENUM SPACER	-	5/6/2011	
M-17	HOT WATER PIPING ISOMETRIC	-	5/6/2011	
M-17A	REFRIGERATION SCHEMATIC ISOMETRIC	-	5/6/2011	
M-18	INSTRUMENT LOCATION PLAN	-	5/6/2011	
M-19	IDENTIFICATION TAG DETAILS	-	5/6/2011	
M-19A	STENCILS	-	5/6/2011	
M-20	SCHEDULES	-	5/6/2011	
M-21	ELECTRO MECHANICAL CONTROL DIAGRAM EMCD	-	5/6/2011	
M-22	ELECTRO MECHANICAL CONTROL DIAGRAM EMCD	-	5/6/2011	
M-23	ELECTRO MECHANICAL CONTROL DIAGRAM EMCD	-	5/6/2011	
M-24	ELECTRO MECHANICAL CONTROL DIAGRAM EMCD	-	5/6/2011	

INDEX

DRAWING	TITLE	REV	DATE	STATUS
ELECTRICAL				
E-1	SYMBOL LEGEND & NOTES	-	5/6/2011	
E-2	WIRE & CONDUIT SCHEDULE	-	5/6/2011	
E-5	PLC BLOCK DIAGRAM	-	5/6/2011	
E-6	SINGLE LINE DIAGRAM	-	5/6/2011	
E-7	480 VAC WIRING DIAGRAM	-	5/6/2011	
E-8	480 VAC MOTOR WIRING DIAGRAM	-	5/6/2011	
E-9	120 VAC WIRING DIAGRAM	-	5/6/2011	
E-10	ELECTRICAL ENCLOSURES PLAN VIEW	-	5/6/2011	
E-11	ENCLOSURE LAYOUTS & DETAILS PANEL MPPU	-	5/6/2011	
E-16	ENCLOSURE LAYOUTS & DETAILS STARTER CABINET	-	5/6/2011	
E-17	ENCLOSURE LAYOUTS & DETAILS HEATER CONTROLLER	-	5/6/2011	
E-18	ENCLOSURE LAYOUTS & DETAILS INSTRUMENTATION DISTRIBUTION BOX	-	5/6/2011	
E-19	ENCLOSURE LAYOUTS & DETAILS VALVE 120VAC DISTRIBUTION BOX	-	5/6/2011	
E-20	ENCLOSURE LAYOUTS & DETAILS CONTROL CABINET DETAILS	-	5/6/2011	
E-21	MPPU CONTROL CABINET LAYOUT & DETAILS	-	5/6/2011	
E-22	MPPU - A ENCLOSURE	-	5/6/2011	
E-23	VALVE FEEDBACK & CONTROL DISTRIBUTION BOX	-	5/6/2011	
E-28	ELECTRICAL BLOCK DIAGRAMS SHEET 1 OF 2	-	5/6/2011	
E-29	ELECTRICAL BLOCK DIAGRAMS SHEET 2 OF 2	-	5/6/2011	
E-33	MPPU POWER WIRING SHEET 1	-	5/6/2011	
E-34	MPPU POWER WIRING SHEET 2	-	5/6/2011	
E-35	MPPU POWER WIRING SHEET 3	-	5/6/2011	
E-36	MPPU POWER WIRING SHEET 4	-	5/6/2011	
E-37	PLC WIRING DIAGRAM - SLOT 4	-	5/6/2011	
E-38	PLC WIRING DIAGRAM - SLOT 5	-	5/6/2011	
E-39	PLC WIRING DIAGRAM - SLOT 6	-	5/6/2011	
E-40	PLC WIRING DIAGRAM - SLOT 7	-	5/6/2011	
E-41	PLC WIRING DIAGRAM - SLOT 8	-	5/6/2011	
E-42	PLC WIRING DIAGRAM - SLOT 14	-	5/6/2011	
E-43	PLC WIRING DIAGRAM - SLOT 9	-	5/6/2011	
E-44	PLC WIRING DIAGRAM - SLOT 10	-	5/6/2011	
E-45	PLC WIRING DIAGRAM - SLOT 11	-	5/6/2011	
E-46	PLC WIRING DIAGRAM VALVE CONTROL FEEDBACK	-	5/6/2011	
E-47	WIRING DIAGRAM FLOW CONTROL VALVES - SHEET 1	-	5/6/2011	
E-48	WIRING DIAGRAM FLOW CONTROL VALVES - SHEET 2	-	5/6/2011	
E-49	WIRING DIAGRAM TEMP CONTROL VALVES - SHEET 1	-	5/6/2011	
E-50	WIRING DIAGRAM TEMP CONTROL VALVES - SHEET 2	-	5/6/2011	
E-51	WIRING DIAGRAM ANALOG INSTRUMENTATION	-	5/6/2011	
E-52	TRANSMITTER PANEL LAYOUT	-	5/6/2011	
E-53	WIRING DIAGRAM TEMPERATURE MEASUREMENTS	-	5/6/2011	
E-54	COMMUNICATIONS BLOCK DIAGRAM	-	5/6/2011	
E-55	PLC WIRING DIAGRAM - SLOT 15	-	5/6/2011	

REFERENCE DRAWINGS:
SPECIFICATION: 584FCM01001
STATEMENT OF WORK: P.R. NO.: 4200334744

PROGRAM MODEL NO: GF-K-00028-01-001

V-1

SYM	ZONE	DESCRIPTION	DATE	APPROVAL
		REVISIONS		

SIGNATURES		DATE
DRAFTER	T. JOBE	05/06/11
CHECKER	D. MAY	05/06/11
ENGINEER	A. JACQUES	05/06/11
	R. WITHERSPOON	05/06/11
	R. FRANCO	05/06/11
SUBMITTED	T.O. ADAMS	05/06/11
APPROVED	E.A. THAXTON	DATE 05/06/11

NATIONAL AERONAUTICS AND SPACE ADMINISTRATION
JOHN F. KENNEDY SPACE CENTER, NASA
KENNEDY SPACE CENTER, FLORIDA

ASSEMBLY DRAWINGS
MPPU REFURBISHMENT DESIGN
ENVIRONMENTAL CONTROL SYSTEM
TITLE & INDEX

TITLE

SIZE F | DWG. NO. 584F0301001 | REV –
PROJ. NO. 95255 | SHEET | OF

P:\95255\DRAWINGS\GENERAL\V-1.DWG 04-MAY-2011 08:00 JOBETL

KSC FORM 1-11 (REV. 3/76) (C/G 3/93)

EAR 99

FOR ANY PURPOSE OTHER THAN IN CONNECTION WITH A DEFINITELY RELATED GOVERNMENT PROCUREMENT OPERATION, THE UNITED STATES GOVERNMENT THEREBY INCURS NO RESPONSIBILITY NOR ANY OBLIGATION WHATSOEVER; AND THE FACT THAT THE GOVERNMENT MAY HAVE FORMULATED, FURNISHED, OR IN ANY WAY SUPPLIED THE SAID DRAWINGS, SPECIFICATIONS OR ANY OTHER DATA IS NOT TO BE REGARDED BY IMPLICATION OR OTHERWISE IN ANY MANNER LICENSING THE HOLDER OR ANY OTHER PERSONS OR CORPORATION, OR CONVEYING ANY RIGHTS OR PERMISSION TO MANUFACTURE, USE, OR SELL ANY PATENTED INVENTION THAT IN ANY WAY BE RELATED THERETO.

EAR 99 – NO LICENSE REQUIRED

The information contained in this document is technical in content, but not technical data as defined by the International Traffic in Arms Regulations (ITAR) or the Export Administration Regulations (EAR), and therefore is EAR 99 NLR, meaning no license required, suitable for public release. (General Prohibition Six (Embargo) applies to all items subject to the EAR, i.e. items on the CCL and within EAR 99 NLR. You may not make an export or reexport contrary to the provisions of part 746 (Embargos and Other Special Controls) of the EAR and 22 CFR part 126.1 of the ITAR).

EDDR # 113043 : NASA KSC Export Control Office (321-867-6039)

EAR 99

REHABILITATION ACTIVITIES			
MOD NOTE	REFERENCE	ITEM	DESCRIPTION
25	S-1	MPPU FRAME	STRIP, REPAIR, AND REPAINT
26	M-1, V-3	EXTERIOR PANELS AND LOUVERS	STRIP, REPAIR, AND REPAINT
27	SPECIFICATION 584FCM01001, V-2	BLOWER	REBALANCE, REFURBISH, AND REPAINT
28	SPECIFICATION 584FCM01001, V-3, V-4	RUNNING GEAR AND SUB COMPONENTS (FRONT AND REAR)	STRIP, REPAINT, AND REFURBISH
29	M-9, M-15	DUCT SECTIONS	STRIP, CLEAN, AND REPAINT
30	SPECIFICATION 584FCM01001, M-2, M-6, M-9	FILTER HOUSINGS	STRIP, REPAIR, AND REPAINT (INLET, CARBON, AND HEPA)
31	M-9	DUCTWORK	STRAIGHTEN AND REPAIR ALL DUCT FLANGES
32	SPECIFICATION 584FCM01001, V-2A	HEAT REJECTION COIL	REPAIR, CLEAN, FLUSH, AND STRAIGHTEN FINS
33	SPECIFICATION 584FCM01001, V-2A	WRAP AROUND COILS (2)	REPAIR, CLEAN, FLUSH, AND STRAIGHTEN FINS
34	SPECIFICATION 584FCM01001, V-2	REHEAT COILS (2)	REPAIR, CLEAN, FLUSH, AND STRAIGHTEN FINS (OUTLETS #2 AND #3)
35	SPECIFICATION 584FCM01001, M-1	MPPU ASSEMBLY	ASSEMBLE UNIT IN ACCORDANCE WITH DRAWING AND SPECIFICATION PACKAGE.

MODIFICATION ACTIVITIES			
MOD NOTE	REFERENCE	ITEM	DESCRIPTION
1	M-2, M-3	COMPRESSOR SUPPORT STRUCTURE	MODIFY OR REMAKE SUPPORTS FOR NEW COMPRESSORS ARRANGEMENT
2	V-3, M-2, M-3	REFRIGERATION CONTROL ENCLOSURE SUPPORT STRUCTURE	MODIFY OR REMAKE SUPPORTS TO ACCOMMODATE NEW ENCLOSURE
3	V-4, M-4, S-7	CONDENSER FAN ENCLOSURE SUPPORTS	MODIFY SECONDARY STRUCTURE TO ACCOMMODATE NEW CONDENSER FAN CONTROL ENCLOSURE
4	S-3	DUCT SUPPORT STRUCTURE	RELOCATE DUCT SUPPORT ANGLES TO ACCOMMODATE LENGTHENED GEOMETRY OF HEAT ABSORPTION COIL AND EVAPORATOR COIL
5	V-3, S-9, M-3	INTAKE LOUVER SUPPORT FRAME	PROVIDE NEW VERTICAL SUPPORT ANGLE AND MODIFY INTAKE LOUVER MOUNTING FLANGES TO ACCOMMODATE NEW REFRIGERATION CONTROL ENCLOSURE
6	M-2, M-2A	CIRCULATION PUMP MOUNTING BRACKET	MODIFY EXISTING PUMP CLAMPS AND MOUNTING BRACKETS TO ACCOMMODATE NEW PUMP SIZE
7	M-16A	WATER HEATER MOUNTING BRACKETS	MODIFY OR REMAKE WATER HEATER MOUNTING BRACKETS TO ACCOMMODATE NEW HEATER DIMENSIONS
8	M-17	VALVE SUPPORT STRUCTURE	MODIFY VALVE SUPPORTS TO ACCOMMODATE NEW VALVES AND NEW VALVE ARRANGEMENT

REPLACEMENT ACTIVITIES			
MOD NOTE	REFERENCE	ITEM	DESCRIPTION
9	MULTIBLE DWG SHEETS SPECIFICATION: 584FCM01001	REFRIGERATION SYSTEM	REPLACE COMPLETE REFRIGERATION SYSTEM FOR INCREASED CAPACITY AND NEW REFRIGERANT
10	V-3	OPERATOR COVER	REPLACE EXISTING OPERATOR COVER TO PROVIDE INCREASED CLEARANCE AND SUPPORT
10A	S-1	MOISTURE WICK	REPLACE ALL MOISTURE WICKS IN FRAME AFTER PERFORMING LEAK TEST
10B	M-1, V-3	EXTERIOR PANEL AND LOUVER FASTENERS	REPLACE ALL FASTENERS WITH STAINLESS STEEL FASTENERS
10C	M-1	DUCTWORK FASTENERS	REPLACE ALL FASTENERS WITH STAINLESS STEEL FASTENERS
10D	M-9	DUCT LINE GASKETS	REMOVE AND REPLACE ALL GASKETS BETWEEN DUCT SECTIONS
11	V-3, M-3	COMPRESSOR GAUGE MOUNTING BRACKET	REPLACE EXISTING COMPRESSOR GAUGE MOUNTS TO ACCOMMODATE NEW GAUGES AND NEW LOCATION
12	V-3, V-4, M-4, S-6	CONDENSER SUPPORTS	REPLACE MOUNTING PLATES TO ACCOMMODATE NEW CONDENSER UNITS
13	V-3, M-3	INTAKE LOUVER	REPLACE INTAKE LOUVER TO ACCOMMODATE NEW REFRIGERATION CONTROL ENCLOSURE
14	V-2A	HEAT REJECTION SYSTEM TUBING	REPLACE ALL HEAT REJECTION SYTEM TUBING AND FITTINGS (INSREASED TUBE SIZE)
15	M-17	RE-HEAT SYSTEM TUBING	REPLACE ALL REHEAT SYSTEM TUBING AND FITTINGS (INCREASED TUBE SIZE)
15A	M-16B	DUCT SPACER	REPLACE DUCT SPACER TO ACCOMMODATE NEW COIL AND DUCT GEOMETRY
15B	M-19, M-19A	WARNING LABELS AND MARKINGS	REPLACE ALL LABELS AND WARNINGS ON MPPU
16	M-2, M-3, M-9, M-9A	CONDENSATE DRAINS	REPLACE PRIMARY AND SECONDARY CONDENSATE DRAINS WITH COPPER TUBING AND FITTINGS
16A	E-18	INSTRUMENTATION DISTRIBUTION ENCLOSURE	REPLACE ENCLOSURE AND ALL SUBCOMPONENTS
16B	E-16	STARTER CABINET ENCLOSURE	REPLACE INTERNAL SUBCOMPONENTS. (NOTE: INTERNALS ONLY)
16C	E-6	MPPU POWER PANEL	REPLACE CIRCUIT BREAKERS
16D	E-22	MPPU PANEL-A TRANSFORMER ENCLOSURE	REPLACE INERNAL SUBCOMPONENTS. (NOTE: INTERNALS ONLY)
16E	M-5, E-20	MPPU CONTROL SYSTEM ENCLOSURE	REPLACE ENCLOSURE AND ALL SUBCOMPONENTS
17	V-3, E-10	REFRIGERATION CONTROL ENCLOSURE	REPLACE ENCLOSURE AND ALL SUBCOMPONENTS
17A	E-10	BLOWER MOTOR STARTER	REPLACE ENCLOSURE AND ALL SUBCOMPONENTS
17B	E-17	HEATER CONTROL ENCLOSURE	REPLACE ENCLOSURE AND ALL SUBCOMPONENTS
17C	E-8	JUNCTION BOX ENCLOSURE	REPLACE ENCLOSURE AND ALL SUBCOMPONENTS
17D	E-10	POWER INPUT PANEL	REPLACE ENCLOSURE AND ALL SUBCOMPONENTS
17E	E-2	CONDUCTORS	REPLACE ALL CONTROL AND POWER WIRING , CONNECTORS, AND TERMINATIONS
17F	E-2	CONDUIT	REPLACE ALL CONDUIT AND TERMINATIONS
17G	E-6, E-7	MPPU POWER CABLES	PROVIDE NEW POWER CABLES AND CONNECTORS

NEW SCOPE / SYSTEM LEVEL MODIFICATIONS			
MOD NOTE	REFERENCE	ITEM	DESCRIPTION
17H	E-23	VALVE FEEDBACK & CONTROL DISTRIBUTION ENCLOSURE	FURNISH AND INSTALL ENCLOSURE AND ALL SUBCOMPONENTS
17I	E-19	VALVE 120VAC DISTRIBUTION ENCLOSURE	FURNISH AND INSTALL ENCLOSURE AND ALL SUBCOMPONENTS
18	V-4, M-4	CONDENSER FAN ENCLOSURE	FURNISH AND INSTALL ENCLOSURE AND ALL SUBCOMPONENTS
19	V-2, M-9, M-18	CONDENSATE FLOW SWITCHES	PROVIDE FLOW SWITCHES ON PRIMARY AND SECONDARY CONDENSATE DRAIN LINES
20	V-2, V-2A M-17	HEAT REJECTION SYSTEM TEMPERATURE CONTROL	FURNISH AND INSTALL MIXING VALVE, FLOW CONTROL VALVE AND CIRCUIT BALANCING VALVES FOR CLOSED LOOP CONTROL OF FLOW THROUGH THE HEAT REJECTION COIL
21	V-2, M-18	HEAT REJECTION SYSTEM OFF COIL TEMPERATURE SENSOR	FURNISH AND INSTALL OFF COIL THERMOCOUPLE FOR CLOSED LOOP CONTROL OF HEAT REJECTION SYSTEM
22	V-3, M-3	OUTSIDE AIR LOUVER (ABOVE REFRIGERATION CONTROL ENCLOSURE)	FURNISH AND INSTALL OUTSIDE AIR LOUVER TO CLOSE AREA ABOVE REFRIGERATION CONTROL ENCLOSURE

TEARDOWN ACTIVITIES			
MOD NOTE	REFERENCE	ITEM	DESCRIPTION
23	SPECIFICATION: 584FCM01001	ALL COMPONENTS	REMOVE ALL EQUIPMENT AND COMPONENTS FROM MPPU FRAME FOR REPAINTING AND REPAIR
24	SPECIFICATION: 584FCM01001	DUCTING COMPONENTS	SEPARATE ALL DUCT COMPONENTS, INCLUDING COILS, VALVES, FILTERS, INSTRUMENTATION AND ALL HARDWARE FOR CLEANING AND INSPECTION

GENERAL NOTES:

A. PREPARE AND PAINT ALUMINUM, EXCEPT FOR PHOTOSENSITIVE ANODIZED ALUMINUM PLATES AND FOILS, AS FOLLOWS: DEGREASE AND MECHANICALLY CLEAN (PER REQUIREMENTS SIMILAR TO THOSE IN SSPC-SP 3) USING NON-FERROUS ABRASIVE DISC/SHEETS, STAINLESS STEEL BRUSHES, OR BRUSH BLASTING (PER REQUIREMENTS SIMILAR TO THOSE IN SSPC-SP 7). REMOVE ABRASIVE RESIDUE. CLEAN AND DRY THE SURFACES. APPLY A CHEMICAL CONVERSION COAT (ALODINE OR EQUAL) PER MIL-DTL-5541, TYPE I, CLASS 1A, OPTION 1 FOR PROCESS CONTROL INSPECTION, FOLLOWED BY AN INTERMEDIATE COAT OF INHIBITED EPOXY PRIMER AND A POLYURETHANE TOPCOAT (CONFORMING TO PARAGRAPHS 4.1.2.2.1 AND 4.1.2.3.1, RESPECTIVELY, OF NASA-STD-5008) FROM THE APPROVED PRODUCTS LIST OF NASA-STD-5008 APPENDIX B. TOP COAT SHALL BE A COMMERCIAL STANDARD COLOR CLOSEST TO WHITE NO.17925 PER FED-STD-595. PRIOR TO APPLICATION OF THE TOPCOAT, COMPLETELY SEAL THE PERIMETER OF ALL FAYING SURFACES, JOINTS OPEN LESS THAN 1/2 INCH AND SKIP WELDED JOINTS BY APPLYING POLYSULFIDE RUBBER OR POLYURETHANE SEALANT PER GUIDELINES IN NASA-STD-5008 PARAGRAPH 4.4.4 THE APPLICATION OF THE COATING AND THICKNESS OF APPLICATION SHALL COMPLY WITH THE MANUFACTURE'S RECOMMENDATIONS. NACE INSPECTION IS REQUIRED FOR ALL SURFACE PREPARATIONS AND COATING APPLICATIONS PER PARAGRAPH 5.2 OF NASA-STD-5008.

B. PREPARE AND PAINT CARBON STEEL AS FOLLOWS: DEGREASE PER SSPC-SP 1, MECHANICALLY CLEAN PER SSPC-SP 2 OR SSPC-SP 3 AND ABRASIVE BLAST PER SSPC-SP 10 TO AN ANCHOR PROFILE OF 1.5-3.0 MILS. ALL RUST SHALL BE COMPLETELY REMOVED FROM PITS AND DEPRESSIONS. REMOVE ABRASIVE RESIDUE. CLEAN AND DRY THE SURFACES. APPLY A BRUSH COATING OR STRIPE COATING WITH AN INORGANIC ZINC COATING ON ALL WELDS, CUTOUTS, SHARP EDGES, RIVETS, CREVICES AND BOLTS. APPLY A 4-6 MIL DRY FILM THICKNESS INORGANIC ZINC (IOZ) COATING (CONFORMING TO PARAGRAPH 4.1.2.1 OF NASA-STD-5008) FROM THE APPROVED PRODUCTS LIST OF NASA-STD-5008 APPENDIX A. AFTER APPLICATION OF ZINC, COMPLETELY SEAL THE PERIMETER OF ALL FAYING SURFACES, JOINTS OPEN LESS THAN 1/2 INCH AND SKIP WELDED JOINTS BY APPLYING POLYSULFIDE RUBBER OR POLYURETHANE SEALANT PER GUIDELINES IN NASA-STD-5008 PARAGRAPH 4.4.4. APPLY AN INORGANIC TOPCOAT (CONFORMING TO PARAGRAPH 4.1.2.3.3 OF NASA-STD-5008) FROM THE APPROVED PRODUCTS LIST OF NASA-STD-5008 APPENDIX B AT 3.0 – 5.0 MILS DFT. TOP COAT SHALL BE A COMMERCIAL STANDARD COLOR CLOSEST TO WHITE NO.17925 PER FED-STD-595.

C. PREPARE AND PAINT STAINLESS STEEL AS FOLLOWS: DEGREASE PER SSPC-SP 1 AND MECHANICALLY CLEAN PER SSPC-SP 3 USING NON-FERROUS SANDING ABRASIVE DISCS/SHEETS. REMOVE ABRASIVE RESIDUE. CLEAN AND DRY THE SURFACES. APPLY AN INHIBITED POLYAMIDE EPOXY PRIMER COAT AND AN ALIPHATIC POLYURETHANE TOPCOAT (CONFORMING TO PARAGRAPHS 4.1.2.2.1 AND 4.1.2.3.1, RESPECTIVELY, OF NASA-STD-5008) FROM THE APPROVED PRODUCTS LIST OF NASA-STD-5008 APPENDIX B. AFTER APPLICATION OF PRIMER COAT, COMPLETELY SEAL THE PERIMETER OF ALL FAYING SURFACES, JOINTS OPEN LESS THAN 1/2 INCH AND SKIP WELDED JOINTS BY APPLYING POLYSULFIDE RUBBER OR POLYURETHANE SEALANT PER GUIDELINES IN NASA-STD-5008, PARAGRAPH 4.4.4. TOP COAT SHALL BE A COMMERCIAL STANDARD COLOR CLOSEST TO WHITE NO.17925 PER FED-STD-595. THE APPLICATION OF THE COATING AND THE THICKNESS OF APPLICATION SHALL COMPLY WITH THE MANUFACTURER'S RECOMMENDATIONS. NACE INSPECTION IS REQUIRED FOR ALL SURFACE PREPARATIONS AND COATING APPLICATIONS PER PARAGRAPH 5.2 OF NASA-STD-5008.

D. TOUCHUP OF WELDS AND DAMAGED COATINGS SHALL BE ACCOMPLISHED PER THE GUIDELINES IDENTIFIED IN NASA-STD-5008 PARAGRAPHS 4.4.3.8 AND 4.5.8, ALONG WITH TABLE 1, TO MATCH THE ORIGINAL FINISH.

SPECIFIC NOTES:

E THE MPPU REFURBISHMENT INVOLVES A COMPLETE TEARDOWN OF THE SYSTEM TO A BARE STRUCTURAL FRAMEWORK, MODIFICATION OF THE STRUCTURE AND COMPONENTS, AND A COMPLETE REBUILD ACCORDING TO THIS DRAWING PACKAGE AND SPECIFICATION 584FCM01001. THE MPPU DESIGN HAS BEEN MODIFIED FOR INCREASED CAPACITY AND FUNCTIONALITY. THIS DRAWING PACKAGE DETAILS THE MODIFIED STATE OF THE MPPU, SHOWING THE CONFIGURATION TO BE USED DURING REASSEMBLY.

F. SHEETS M-1A THRU M-1C OF THIS DRAWING PACKAGE LIST THE MECHANICAL COMPONENTS USED IN THE FINAL SYSTEM CONFIGURATION. THE COLUMN TITLED "REFURBISHMENT NOTE" IS PROVIDED TO INDICATE THE DISPOSITION OF INDIVIDUAL COMPONENTS FROM THE ORIGINAL CONFIGURATION. THE COMPONENT DISPOSITIONS ARE AS INDICATED:

1. REPLACE: REPLACE COMPONENT WITH INDICATED MODEL.
2. REUSE: ORIGINAL COMPONENT TO BE REUSED IN FINAL SYSTEM CONFIGURATION (SUBJECT TO INSPECTION BY THE CONTRACTOR, PROVIDE RECOMMENDATION FOR REPLACEMENT TO THE CONTRACTING OFFICER OR DESIGNATED REPRESENTATIVE, DO NOT REPLACE ANY COMPONENT WITHOUT APPROVAL FROM THE CONTRACTING OFFICER OR DESIGNATED REPRESENTATIVE).
3. REFURBISH: ORIGINAL COMPONENT TO BE REUSED IN THE FINAL CONFIGURATION. COMPONENT REQUIRES REFURBISHMENT IN ACCORDANCE WITH SPECIFICATION 584FCM01001
4. NEW: NEW SCOPE OR FUNCTIONALITY ADDED TO MPPU SYSTEM REQUIRES A NEW COMPONENT

G. THIS SHEET HAS BEEN PROVIDED TO SUMMARIZE THE MAJOR REFURBISHMENT ACTIVITIES REQUIRED TO BRING THE MPPU TO THE FINAL SYSTEM CONFIGURATION SHOWN IN THIS DRAWING PACKAGE. THE FOLLOWING LIST SERVES IN TANDEM WITH THE INDIVIDUAL COMPONENT DISPOSITION ON M-1A THRU M-1C. THIS SHEET AND CORRESPONDING MODIFICATION FLAGS ILLUSTRATE THE MODIFICATION ACTIVITIES THAT ENCOMPASS SYSTEM MODIFICATIONS, STRUCTURAL MODIFICATIONS, AND ITEMS NOT DEFINED ON M-1A THRU M-1C. A BRIEF DESCRIPTION OF THE ITEMS OR SYSTEMS, AND A BRIEF DESCRIPTION OF THE MODIFICATIONS REQUIRED ARE GIVEN. THE MODIFICATION ACTIVITIES LISTED ON THIS SHEET ARE INTENDED AS A GUIDE TO THE CONTRACTOR, AND ARE NOT INTENDED AS A COMPLETE SCOPE OF WORK. FOR A DETAILED SCOPE OF WORK, SEE SECTION 01010 OF SPECIFICATION 584FCM01001.

H. MODIFICATION NOTE NUMBERS ON THIS SHEET CORRESPOND TO THE MODIFICATION FLAGS THROUGHOUT THIS DRAWING PACKAGE. MODIFICATION FLAGS ARE PROVIDED TO HIGHLIGHT SPECIFIC MODIFICATION ACTIVITIES ILLUSTRATED BY THE TABLES ON THIS SHEET.

I THE ELECTRICAL AND CONTROL SYSTEMS COMPONENTS IN THIS DRAWING PACKAGE ARE NEW, REUSING ENCLOSURES AND COMPONENTS AS INDICATED. A BRIEF OVERVIEW OF THE ELECTRICAL AND CONTROL SYSTEM DISPOSITION IS INDICATED ON THIS SHEET.

SYM	ZONE	DESCRIPTION	DATE	APPROVAL
REVISIONS				

SIGNATURES		DATE
DRAFTER	T. JOBE	05/06/11
CHECKER	R. WITHERSPOON	05/06/11
ENGINEER	A. JACQUES	05/06/11
	R. WITHERSPOON	05/06/11
	R. FRANCO	05/06/11
SUBMITTED	T.O. ADAMS	05/06/11
APPROVED	E.A. THAXTON	DATE 05/06/11

NATIONAL AERONAUTICS AND SPACE ADMINISTRATION
JOHN F. KENNEDY SPACE CENTER, NASA
KENNEDY SPACE CENTER, FLORIDA

ASSEMBLY DRAWINGS
MPPU REFURBISHMENT DESIGN
ENVIRONMENTAL CONTROL SYSTEM
MODIFICATION DETAILS

TITLE V-1A

SIZE F | DWG. NO. 584F0301001 | REV –

PROJ. NO. 95255 | SHEET OF

P:\95255\DRAWINGS\GENERAL\V-1A.DWG 02-MAY-2011 16:14 JOBEL

KSC FORM 1-11 (REV. 3/76) (C/G 3/93)

FOR ANY PURPOSE OTHER THAN IN CONNECTION WITH A DEFINITELY RELATED GOVERNMENT PROCUREMENT OPERATION, THE UNITED STATES GOVERNMENT THEREBY INCURS NO RESPONSIBILITY NOR ANY OBLIGATION WHATSOEVER; AND THE FACT THAT THE GOVERNMENT MAY HAVE FORMULATED, FURNISHED, OR IN ANY WAY SUPPLIED THE SAID DRAWINGS, SPECIFICATIONS OR ANY OTHER DATA IS NOT TO BE REGARDED BY IMPLICATION OR OTHERWISE IN ANY MANNER LICENSING THE HOLDER OR ANY OTHER PERSONS OR CORPORATION, OR CONVEYING ANY RIGHTS OR PERMISSION TO MANUFACTURE, USE, OR SELL ANY PATENTED INVENTION THAT IN ANY WAY BE RELATED THERETO.

EAR 99 – NO LICENSE REQUIRED

The information contained in this document is technical in content, but not technical data as defined by the International Traffic in Arms (ITAR) or the Export Administration Regulations (EAR), and therefore is EAR 99 NLR, meaning no license required, suitable for public release. (General Prohibition Six (Embargo) applies to all items subject to the EAR, i.e. items on the CCL and within EAR 99 NLR. You may not make an export or reexport contrary to the prohibitions of part 746 (Embargos and Other Special Controls) of the EAR and 22 CFR part 126.1 of the ITAR).

EDDR # 113043 : NASA KSC Export Control Office (321- 867-9209)

EAR 99

SPECIFIC NOTES:

A. SET DIFFERENTIAL PRESSURE ACROSS VALVE TO 2.6 PSID.

B. SET DIFFERENTIAL PRESSURE ACROSS VALVE TO MATCH DIFFERENTIAL PRESSURE ACROSS HEAT REJECTION COIL.

C. SET DIFFERENTIAL PRESSURE ACROSS VALVE FOR A FLOW RATE OF 13.75 GPM.

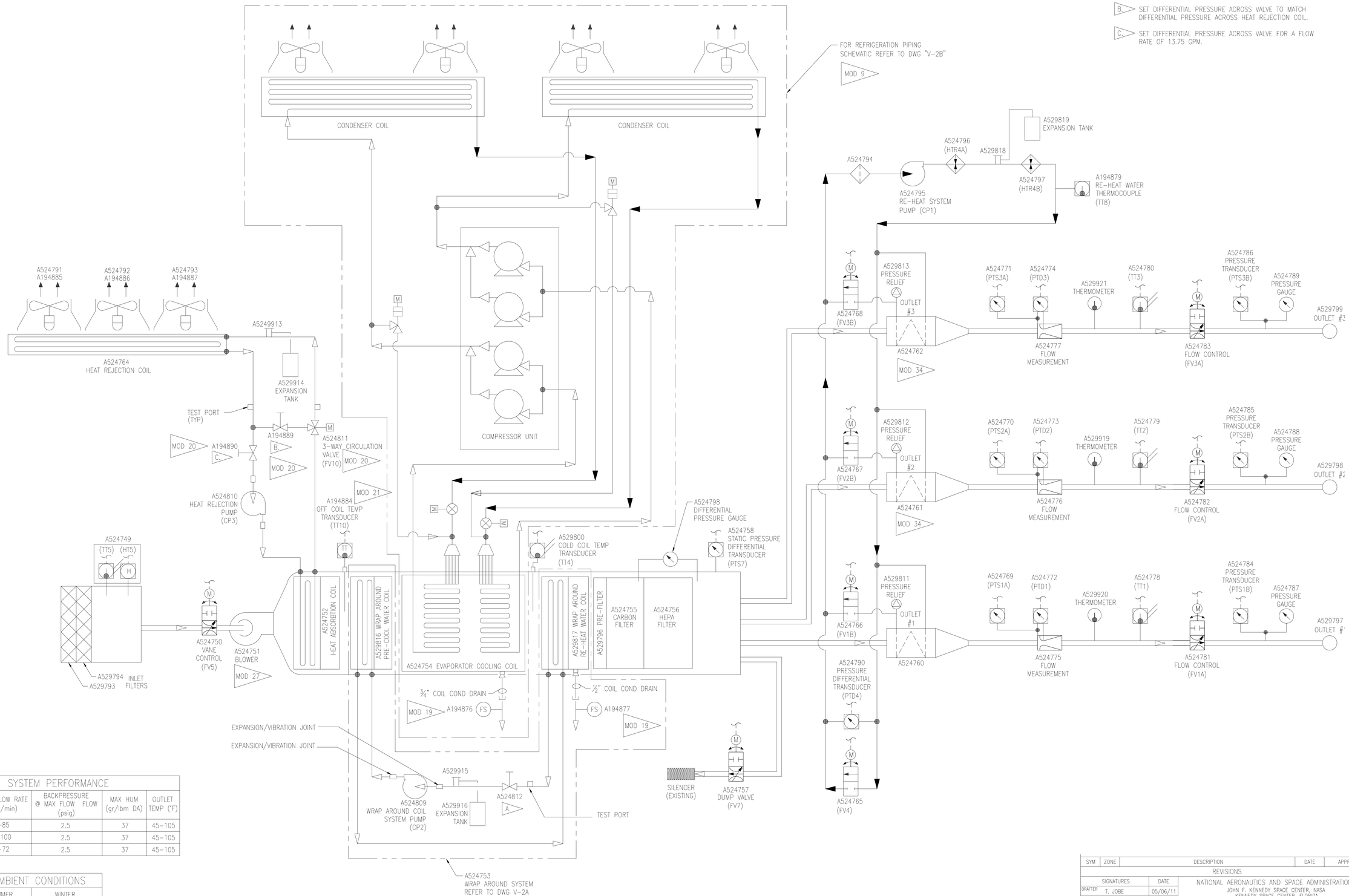

SYSTEM PERFORMANCE

OUTLET #	MASS FLOW RATE (lbm/min)	BACKPRESSURE @ MAX FLOW FLOW (psig)	MAX HUM. (gr/lbm DA)	OUTLET TEMP (°F)
1	0–85	2.5	37	45–105
2	0–100	2.5	37	45–105
3	0–72	2.5	37	45–105

OPERATING AMBIENT CONDITIONS

	SUMMER	WINTER
TEMP	95°F	30.2°F
PRESSURE	14.125 psia	15.04 psia
SPECIFIC HUMIDITY	.02517 lb/lb	.00342 lb/lb

SYSTEM SCHEMATIC
SCALE: NONE

SYM	ZONE	DESCRIPTION	DATE	APPROVAL
		REVISIONS		

SIGNATURES		DATE
DRAFTER	T. JOBE	05/06/11
CHECKER	D. MAY	05/06/11
ENGINEER	A. JACQUES	05/06/11
	R. WITHERSPOON	05/06/11
	R. FRANCO	05/06/11
SUBMITTED	T.O. ADAMS	05/06/11
APPROVED	E.A. THAXTON	05/06/11

NATIONAL AERONAUTICS AND SPACE ADMINISTRATION
JOHN F. KENNEDY SPACE CENTER, NASA
KENNEDY SPACE CENTER, FLORIDA

ASSEMBLY DRAWINGS

MPPU REFURBISHMENT DESIGN ENVIRONMENTAL CONTROL SYSTEM SYSTEM MECHANICAL SCHEMATIC / SMS

SIZE F | DWG. NO. 584F0301001 | REV —

TITLE V-2 | PROJ. NO. 95255 | SHEET OF

P:\95255\DRAWINGS\GENERAL\V-2.DWG 03-MAY-2011 10:34 JOBETL

KSC FORM 1-11 (REV. 3/76) (C/G 3/93)

EAR 99

FOR ANY PURPOSE OTHER THAN IN CONNECTION WITH A DEFINITELY RELATED GOVERNMENT PROCUREMENT OPERATION, THE UNITED STATES GOVERNMENT THEREBY INCURS NO RESPONSIBILITY NOR ANY OBLIGATION WHATSOEVER; AND THE FACT THAT THE GOVERNMENT MAY HAVE FORMULATED, FURNISHED, OR IN ANY WAY SUPPLIED THE SAID DRAWINGS, SPECIFICATIONS OR ANY OTHER DATA IS NOT TO BE REGARDED BY IMPLICATION OR OTHERWISE IN ANY MANNER LICENSING THE HOLDER OR ANY OTHER PERSONS OR CORPORATION, OR CONVEYING ANY RIGHTS OR PERMISSION TO MANUFACTURE, USE, OR SELL ANY PATENTED INVENTION THAT IN ANY WAY BE RELATED THERETO.

EAR 99 – NO LICENSE REQUIRED

The Information contained in this documents is technical in content, but not technical data as defined by the International Traffic in Arms (ITAR) or the Export Administration Regulations (EAR), and therefore is EAR 99 NLR, no export license required, suitable for public release. (General Prohibition Six (Embargo) applies to all items subject to the EAR, i.e. items on the CCL and within EAR 99 NLR. You may not make an export or reexport contrary to the provisions of part 746 (Embargos and Other Special Controls) of the EAR and 22 CFR part 126.1 of the ITAR).

EDDR # 113043 : NASA KSC Export Control Office (321- 867-9209)

EAR 99

SPECIFIC NOTES:

A. ALL HOT WATER PIPING SHALL BE INSULATED WITH 1" THICK ARMAFLEX INSULATION. COVER INSULATION WITH PVC JACKET CEEL CO. P/N 550, JOHNS MANSVILLE CORP.

B. TYPE K COPPER TUBING OXYGEN FREE IN ACCORDANCE W/ ASTM B88.

C. JOINTS SHALL BE BRAZED IN ACCORDANCE WITH KSC-SPEC-Z-0005A.

D. PRESSURE TEST TUBING TO 50 PSIG.

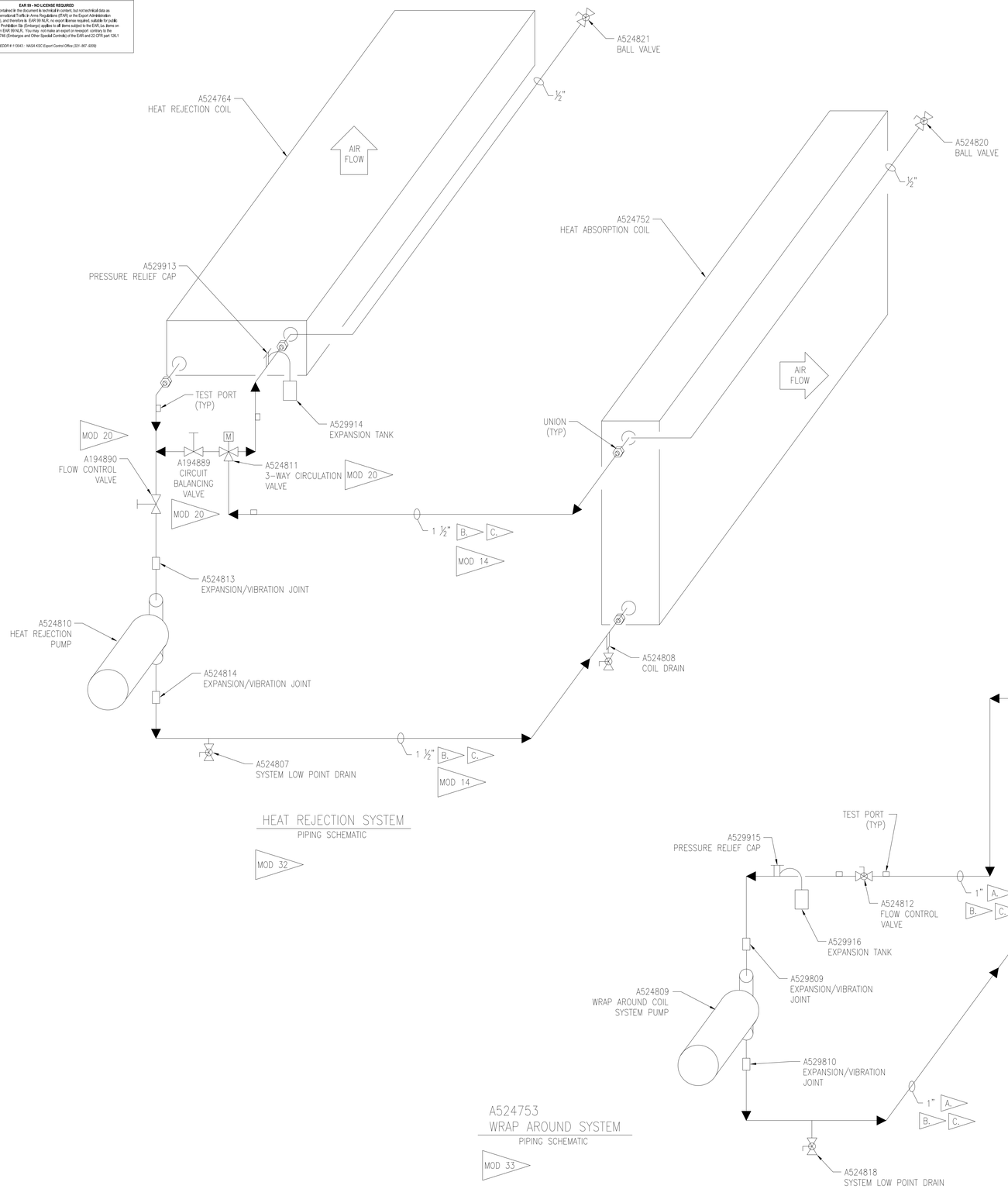

HEAT REJECTION SYSTEM
PIPING SCHEMATIC

MOD 32

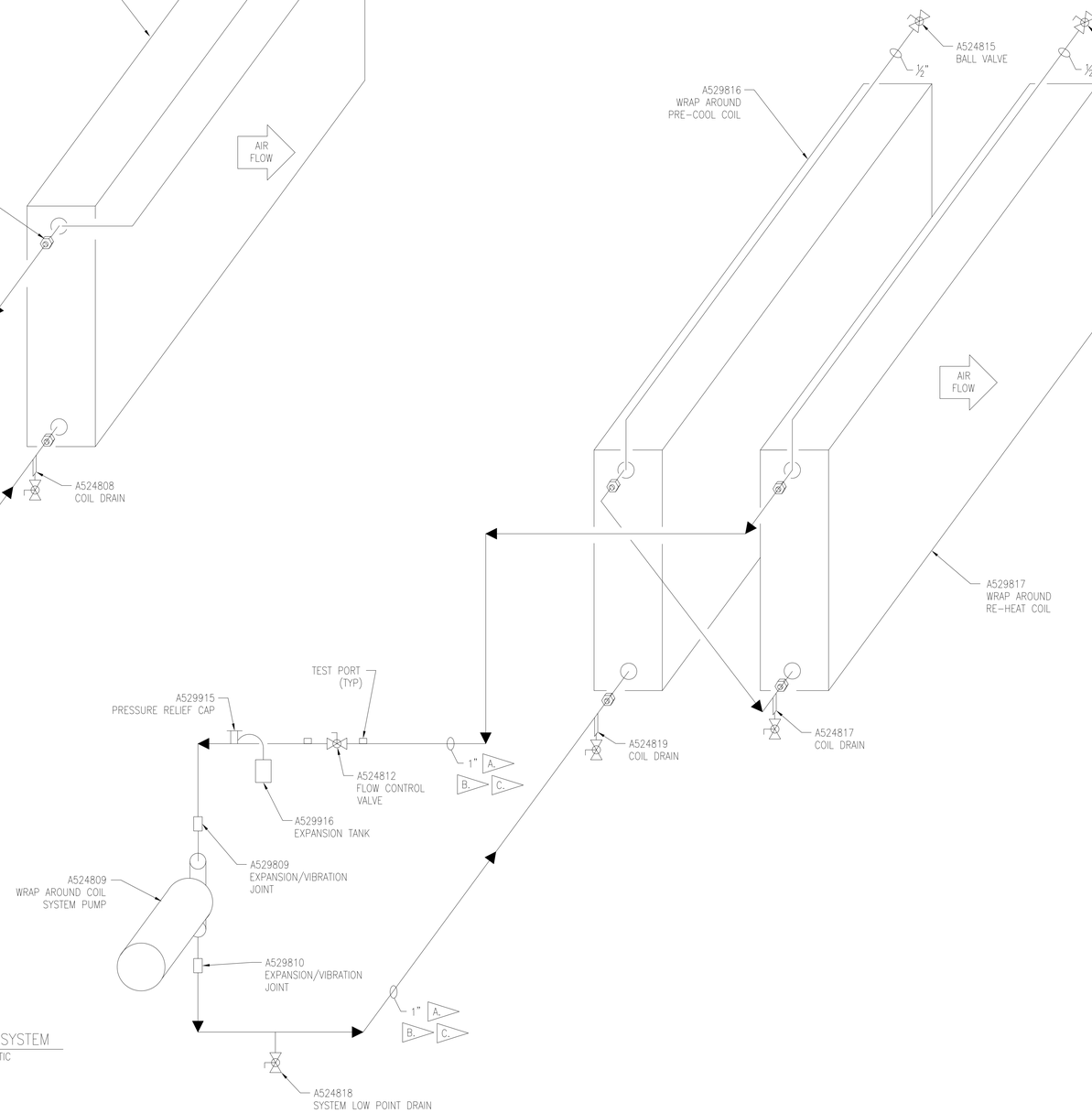

A524753
WRAP AROUND SYSTEM
PIPING SCHEMATIC

MOD 33

SYM	ZONE	DESCRIPTION	DATE	APPROVAL
		REVISIONS		

SIGNATURES		DATE
DRAFTER	T. JOBE	05/06/11
CHECKER	D. MAY	05/06/11
ENGINEER	A. JACQUES	05/06/11
	R. WITHERSPOON	05/06/11
	R. FRANCO	05/06/11
SUBMITTED	T.O. ADAMS	05/06/11
APPROVED	E.A. THAXTON	05/06/11

NATIONAL AERONAUTICS AND SPACE ADMINISTRATION
JOHN F. KENNEDY SPACE CENTER, NASA
KENNEDY SPACE CENTER, FLORIDA

ASSEMBLY DRAWINGS

MPPU REFURBISHMENT DESIGN ENVIRONMENTAL CONTROL SYSTEM HYDRONIC SCHEMATIC

V-2A

SIZE F | DWG. NO. 584F0301001 | REV —

TITLE | PROJ. NO. 95255 | SHEET | OF

P:\95255\DRAWINGS\GENERAL\V-2A.DWG 07-APR-2011 09:47 JOBETL

KSC FORM 1-11 (REV. 3/76) (C/G 3/93)

EAR 99

FOR ANY PURPOSE OTHER THAN IN CONNECTION WITH A DEFINITELY RELATED GOVERNMENT PROCUREMENT OPERATION, THE UNITED STATES GOVERNMENT THEREBY INCURS NO RESPONSIBILITY NOR ANY OBLIGATION WHATSOEVER; AND THE FACT THAT THE GOVERNMENT MAY HAVE FORMULATED, FURNISHED, OR IN ANY WAY SUPPLIED THE SAID DRAWINGS, SPECIFICATIONS OR ANY OTHER DATA IS NOT TO BE REGARDED BY IMPLICATION OR OTHERWISE IN ANY MANNER LICENSING THE HOLDER OR ANY OTHER PERSONS OR CORPORATION, OR CONVEYING ANY RIGHTS OR PERMISSION TO MANUFACTURE, USE, OR SELL ANY PATENTED INVENTION THAT IN ANY WAY BE RELATED THERETO.

EAR 99 – NO LICENSE REQUIRED

The information contained in this document is technical in content, but not technical data as defined by the International Traffic in Arms (ITAR) or the Export Administration Regulations (EAR), and therefore is EAR 99 NLR, meaning no license required, suitable for public release. (General Prohibition Six (Embargo) applies to all items subject to the EAR, i.e. items on the CCL and within EAR 99 NLR. You may not make an export or reexport contrary to the provisions of part 746 (Embargos and Other Special Controls) of the EAR and 22 CFR part 126.1 of the ITAR).

EDDR # 113043 : NASA KSC Export Control Office (321- 867- 6039)

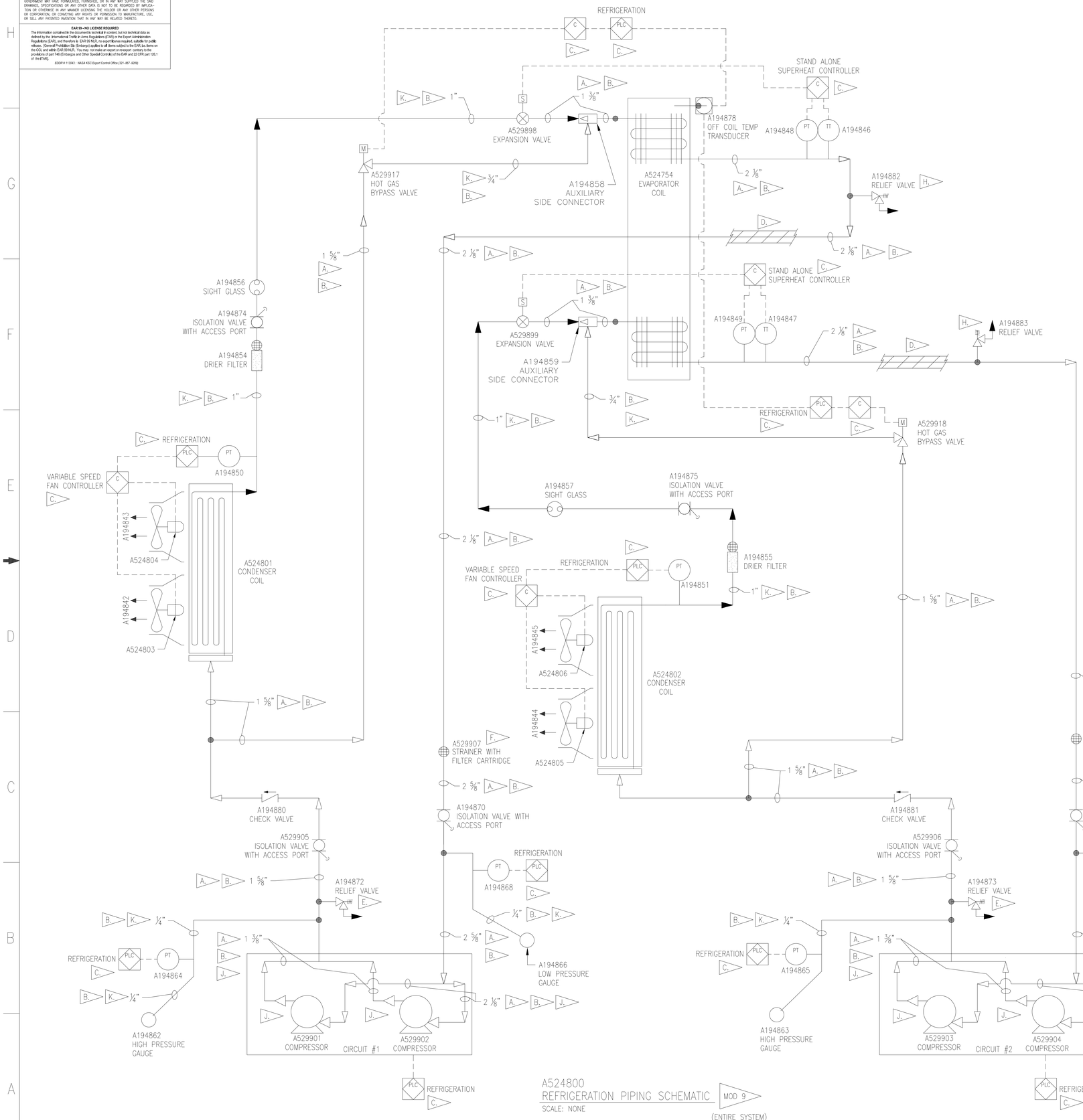

A524800
REFRIGERATION PIPING SCHEMATIC
SCALE: NONE

MOD 9
(ENTIRE SYSTEM)

SPECIFIC NOTES:

A. ALL TUBING SHALL BE CAPPED & CLEANED OXYGEN FREE COPPER IN ACCORDANCE WITH THE FOLLOWING TABLE:

OD	1.375	1.625	2.125	2.625
OD VARIATION	.0015	.002	.002	.002
NOM WALL	.080	.095	.10	.125
WALL THK VARIATION	.006	.007	.008	.008
ALLOY	C12200	C12200	C12200	C12200
TEMPER	HARD DRAWN	HARD DRAWN	HARD DRAWN	HARD DRAWN

B. JOINTS SHALL BE BRAZED IN ACCORDANCE WITH KSC-SPEC-Z-0005.

C. SEE SPECIFICATION 11820 FOR PLC AND CONTROLLER REQUIREMENTS.

D. REFRIGERATION SUCTION LINES SHALL BE INSULATED BETWEEN EVAPORATOR DISCHARGE & SUCTION CONNECTION WITH 2" THICK INSULATION (AP ARMAFLEX PIPE INSULATION INSTALLED USING 520 ADHESIVE AND WB ARMAFLEX FINISH).

E. RELIEF SHALL BE SET TO 550 PSIG.

F. FILTERS SHALL BE REPLACED AFTER SUCCESSFUL COMPLETION OF ACCEPTANCE TEST.

G. ALL HIGH SIDE FITTINGS (1 5/8"ø OR LESS) SHALL BE HELDON R400 SERIES, WITH A MINIMUM SAFE WORKING PRESSURE OF 725 PSIG & A RATED BURST PRESSURE NO LESS THAN 4 TIMES THE SAFE WORKING PRESSURE. ALL LOW SIDE FITTINGS (2 1/8"ø OR GREATER) SHALL BE HELDON LARGE DIAMETER HIGH PRESSURE FITTINGS, WITH A MINIMUM SAFE WORKING PRESSURE OF 465 PSIG & A RATED BURST PRESSURE NO LESS THAN 4 TIMES THE PUBLISHED SAFE WORKING PRESSURE.

H. RELIEF SHALL BE SET TO 465 PSIG.

J. TUBING SHALL BE ROUTED DIRECTLY TO DISCHARGE OF EACH COMPRESSOR BODY, FACTORY SUPPLIED SUCTION & DISCHARGE MANIFOLDS SHALL NOT BE USED.

K. TUBING SHALL BE DRAWN TYPE K OXYGEN FREE COPPER IN ACCORDANCE WITH ASTM B88 (NOMINAL TUBE SIZE SHOWN).

L. ALL COMPONENTS SHALL BE CAPABLE OF AN INTERNAL PRESSURE OF 465 PSIG.

DESIGN CONDITIONS						
REFRIGERANT	COMPRESSOR MASS FLOW RATE:	COMPRESSOR DISCHARGE	CONDENSER	EVAPORATOR	EVAPORATOR SUPERHEAT	CONDENSER SUBCOOLING
R410A	6950 lb/hr	460 PSIA	125°F (460 PSIA)	35°F (122 PSIA)	10°F	10°F

SYM	ZONE	DESCRIPTION	DATE	APPROVAL
REVISIONS				

SIGNATURES		DATE
DRAFTER	T. JOBE	05/06/11
CHECKER	D. MAY	05/06/11
ENGINEER	A. JACQUES	05/06/11
	R. WITHERSPOON	05/06/11
	R. FRANCO	05/06/11
SUBMITTED	T.O. ADAMS	05/06/11
APPROVED	E.A. THAXTON	05/06/11

NATIONAL AERONAUTICS AND SPACE ADMINISTRATION
JOHN F. KENNEDY SPACE CENTER, NASA
KENNEDY SPACE CENTER, FLORIDA

ASSEMBLY DRAWINGS
MPPU REFURBISHMENT DESIGN
ENVIRONMENTAL CONTROL SYSTEM
REFRIGERATION PIPING
SCHEMATIC

SIZE F | DWG. NO. 584F0301001 | REV –
PROJ. NO. 95255 | SHEET | OF
TITLE
P:\95255\DRAWINGS\GENERAL\V-2B.DWG 07-APR-2011 17:02 JOBETL

V-2B

FOR ANY PURPOSE OTHER THAN IN CONNECTION WITH A DEFINITELY RELATED GOVERNMENT PROCUREMENT OPERATION, THE UNITED STATES GOVERNMENT THEREBY INCURS NO RESPONSIBILITY NOR ANY OBLIGATION WHATSOEVER; AND THE FACT THAT THE GOVERNMENT MAY HAVE FORMULATED, FURNISHED, OR IN ANY WAY SUPPLIED THE SAID DRAWINGS, SPECIFICATIONS OR ANY OTHER DATA IS NOT TO BE REGARDED BY IMPLICATION OR OTHERWISE IN ANY MANNER LICENSING THE HOLDER OR ANY OTHER PERSONS OR CORPORATION, OR CONVEYING ANY RIGHTS OR PERMISSION TO MANUFACTURE, USE, OR SELL ANY PATENTED INVENTION THAT IN ANY WAY BE RELATED THERETO.

EAR 99 - NO LICENSE REQUIRED

The information contained in this document is technical in content, but not technical data as defined by the International Traffic in Arms (ITAR) or subject to the Export Administration Regulations (EAR), and therefore is EAR 99 NLR, meaning no license required, suitable for public release. (General Prohibition Six (Embargo) applies to all items subject to the EAR, i.e. items on the CCL and within EAR 99 NLR. You may not make an export or reexport contrary to the provisions of part 746 (Embargoes and Other Special Controls) of the EAR and 22 CFR part 126.1 of the ITAR).

EDDR # 113043 - NASA KSC Export Control Office (321- 867-9209)

EAR 99

SPECIFIC NOTES:

A. STYLE SLX2-E-JB-45, 6061-T5 ALUMINUM FRAME & BLADES, .061 THICK W/ EXPANDED ALUMINUM SCREEN .060 THICK (TYP). MOUNT WITH 1/4-20x1-1/4 HEX HEAD BOLT, STAINLESS. MATCH DRILL AT ASSEMBLY.

B. FABRICATOR SHALL COORDINATE DIMENSIONS & ATTACHMENT DETAILS IN ACCORDANCE WITH STRUCTURAL MODIFICATIONS & EXISTING STRUCTURE.

C. ALL STRUCTURAL MODIFICATIONS NOT DETAILED IN THIS DWG PACKAGE SHALL BE SUBMITTED IN WRITING TO THE CONTRACTING OFFICER OR DESIGNATED REPRESENTATIVE FOR APPROVAL PRIOR TO MODIFICATIONS.

D. LOUVER DIMENSION & SECONDARY SUPPORT STRUCTURE TO BE COORDINATED WITH SELECTED REFRIGERATION CONTROL CABINET. IN ACORDANCE WITH REF SPEC 11820.

E. CONTRACTOR SHALL PROVIDE NEW COVER UNIT. UNIT MUST PROVIDE ADEQUATE CLEARENCE FOR SAFE OPERATION FOR ALL OPERATORS.

F. RELOCATION & MODIFICATION DETAILS SHALL BE SUBMITTED TO NASA IN WRITING & APPROVED BEFORE CONSTRUCTION.

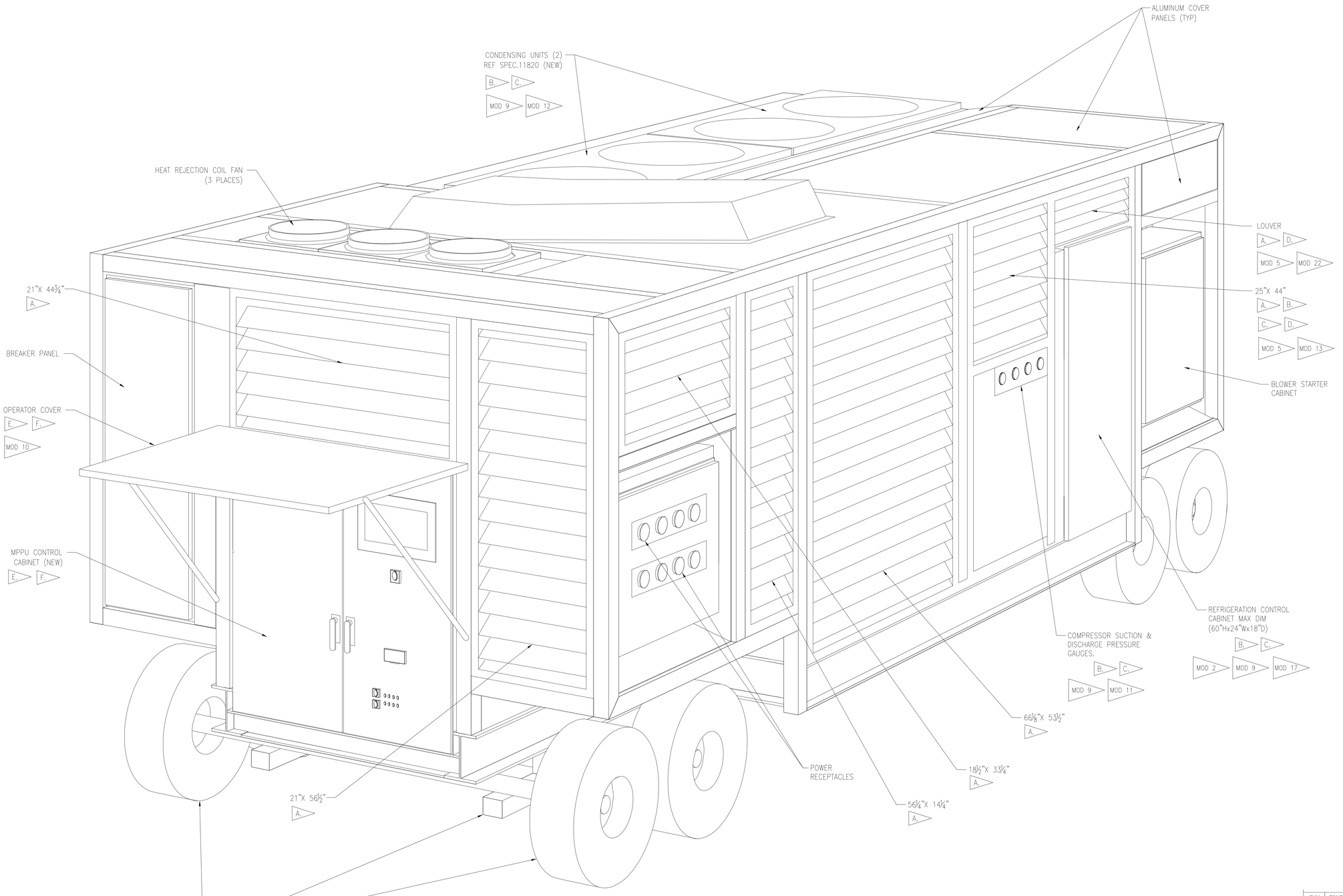

REAR PERSPECTIVE
SCALE: NTS
MOD 10B MOD 26

SYM	ZONE	DESCRIPTION	DATE	APPROVAL
		REVISIONS		

SIGNATURES		DATE
DRAFTER	T. JOBE	05/06/11
CHECKER	D. MAY	05/06/11
ENGINEER	A. JACQUES	05/06/11
	R. WITHERSPOON	05/06/11
	R. FRANCO	05/06/11
SUBMITTED	T.O. ADAMS	05/06/11
APPROVED	E.A. THAXTON	DATE 05/06/11

NATIONAL AERONAUTICS AND SPACE ADMINISTRATION
JOHN F. KENNEDY SPACE CENTER, NASA
KENNEDY SPACE CENTER, FLORIDA

ASSEMBLY DRAWINGS

MPPU REFURBISHMENT DESIGN
ENVIRONMENTAL CONTROL SYSTEM
REAR PERSPECTIVE
LOUVER LAYOUT

TITLE

SIZE	DWG. NO.	REV
F	584F0301001	–
PROJ. NO. 95255	SHEET	OF

P:\95255\DRAWINGS\GENERAL\V-3.DWG 24-MAR-2011 08:55 JOBETL

V-3

EAR 99

KSC FORM 1-11 (REV. 3/76) (C/G 3/93)

FOR ANY PURPOSE OTHER THAN IN CONNECTION WITH A DEFINITELY RELATED GOVERNMENT PROCUREMENT OPERATION, THE UNITED STATES GOVERNMENT THEREBY INCURS NO RESPONSIBILITY NOR ANY OBLIGATION WHATSOEVER, AND THE FACT THAT THE GOVERNMENT MAY HAVE FORMULATED, FURNISHED, OR IN ANY WAY SUPPLIED THE SAID DRAWINGS, SPECIFICATIONS OR ANY OTHER DATA IS NOT TO BE REGARDED BY IMPLICATION OR OTHERWISE IN ANY MANNER LICENSING THE HOLDER OR ANY OTHER PERSONS OR CORPORATION, OR CONVEYING ANY RIGHTS OR PERMISSION TO MANUFACTURE, USE, OR SELL ANY PATENTED INVENTION THAT IN ANY WAY BE RELATED THERETO.

EAR 99 - NO LICENSE REQUIRED

This information contained in the document is technical in content, but not technical data as defined by the International Traffic in Arms Regulations (ITAR) or the Export Administration Regulations (EAR), and therefore is EAR 99 NLR, no export license required, suitable for public release. (General Prohibition Six (Embargo) applies to all items subject to the EAR, i.e. items on the CCL and within EAR 99 NLR. You may not make an export or reexport contrary to the provisions of part 746 (Embargos and Other Special Controls) of the EAR and 22 CFR part 126.1 of the ITAR).

EDDR # 113043 : NASA KSC Export Control Office (321- 867-6009)

EAR 99

SPECIFIC NOTES:

A. STYLE SLX2-E-JB-45, 6061-T5 ALUMINUM FRAME & BLADES, .061 THICK W/ EXPANDED ALUMINUM SCREEN .060 THICK (TYP). MOUNT WITH 1/4-20x1-1/4 HEX HEAD BOLT, STAINLESS STEEL. MATCH DRILL AT ASSEMBLY.

B. FABRICATOR SHALL COORDINATE DIMENSIONS & ATTACHMENT DETAILS IN ACCORDANCE WITH STRUCTURAL MODIFICATIONS & EXISTING STRUCTURE.

C. ALL STRUCTURAL MODIFICATIONS NOT DETAILED IN THIS DWG PACKAGE SHALL BE SUBMITTED IN WRITING TO OWNER FOR APPROVAL PRIOR TO MODIFICATIONS.

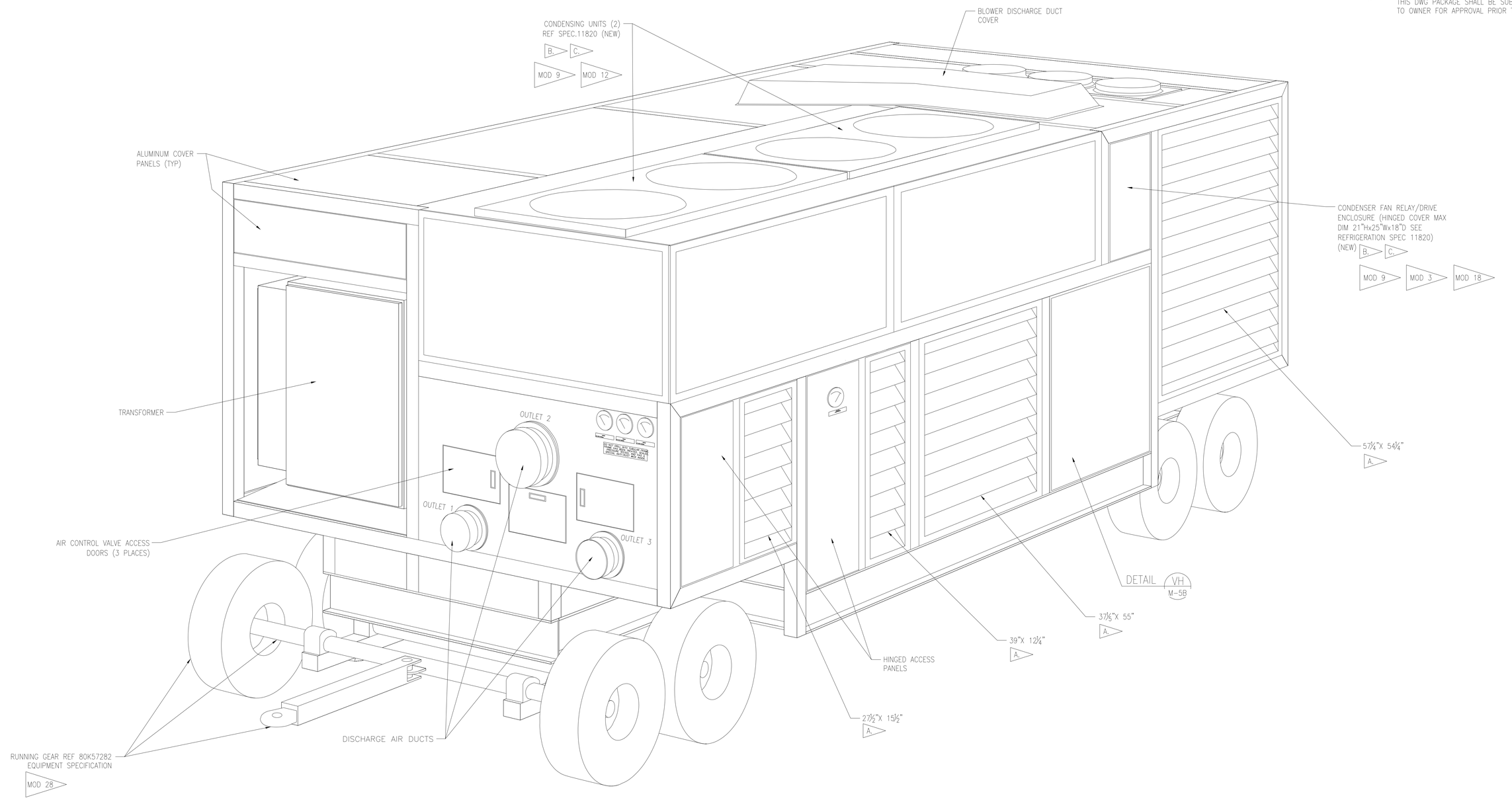

FRONT PERSPECTIVE
SCALE: 3/4"=1'-0"

SYM	ZONE	DESCRIPTION	DATE	APPROVAL

REVISIONS

SIGNATURES		DATE
DRAFTER	T. JOBE	05/06/11
CHECKER	D. MAY	05/06/11
ENGINEER	A. JACQUES	05/06/11
	R. WITHERSPOON	05/06/11
	R. FRANCO	05/06/11
SUBMITTED	T.O. ADAMS	05/06/11
APPROVED	E.A. THAXTON	05/06/11

NATIONAL AERONAUTICS AND SPACE ADMINISTRATION
JOHN F. KENNEDY SPACE CENTER, NASA
KENNEDY SPACE CENTER, FLORIDA

ASSEMBLY DRAWINGS
MPPU REFURBISHMENT DESIGN
ENVIRONMENTAL CONTROL SYSTEM
FRONT PERSPECTIVE
LOUVER LAYOUT

SIZE F | DWG. NO. 584F0301001 | REV –
PROJ. NO. 95255 | SHEET OF

V-4

KSC FORM 1-11 (REV. 3/76) (C/G 3/93)

P:\95255\DRAWINGS\GENERAL\V-4.DWG 18-FEB-2011 09:02 JOBETL

EAR 99

FOR ANY PURPOSE OTHER THAN IN CONNECTION WITH A DEFINITELY RELATED GOVERNMENT PROCUREMENT OPERATION, THE UNITED STATES GOVERNMENT THEREBY INCURS NO RESPONSIBILITY NOR ANY OBLIGATION WHATSOEVER; AND THE FACT THAT THE GOVERNMENT MAY HAVE FORMULATED, FURNISHED, OR IN ANY WAY SUPPLIED THE SAD DRAWINGS, SPECIFICATIONS OR ANY OTHER DATA IS NOT TO BE REGARDED BY IMPLICATION OR OTHERWISE IN ANY MANNER LICENSING THE HOLDER OR ANY OTHER PERSONS OR CORPORATION, OR CONVEYING ANY RIGHTS OR PERMISSION TO MANUFACTURE, USE, OR SELL ANY PATENTED INVENTION THAT IN ANY WAY BE RELATED THERETO.

EAR 99 – NO LICENSE REQUIRED

The information contained in this document is technical in content, but not technical data as defined by the International Traffic in Arms (ITAR) or the Export Administration Regulations (EAR), and therefore is EAR 99 NLR, no license required, suitable for public release. (General Prohibition Six (Embargo) applies to all items subject to the EAR, i.e. items on the CCL and within EAR 99 NLR. You may not make an export or reexport contrary to the provisions of part 746 (Embargos and Other Special Controls) of the EAR and 22 CFR part 126.1 of the ITAR).

EDDR # 113043 : NASA KSC Export Control Office (321- 867- 6039)

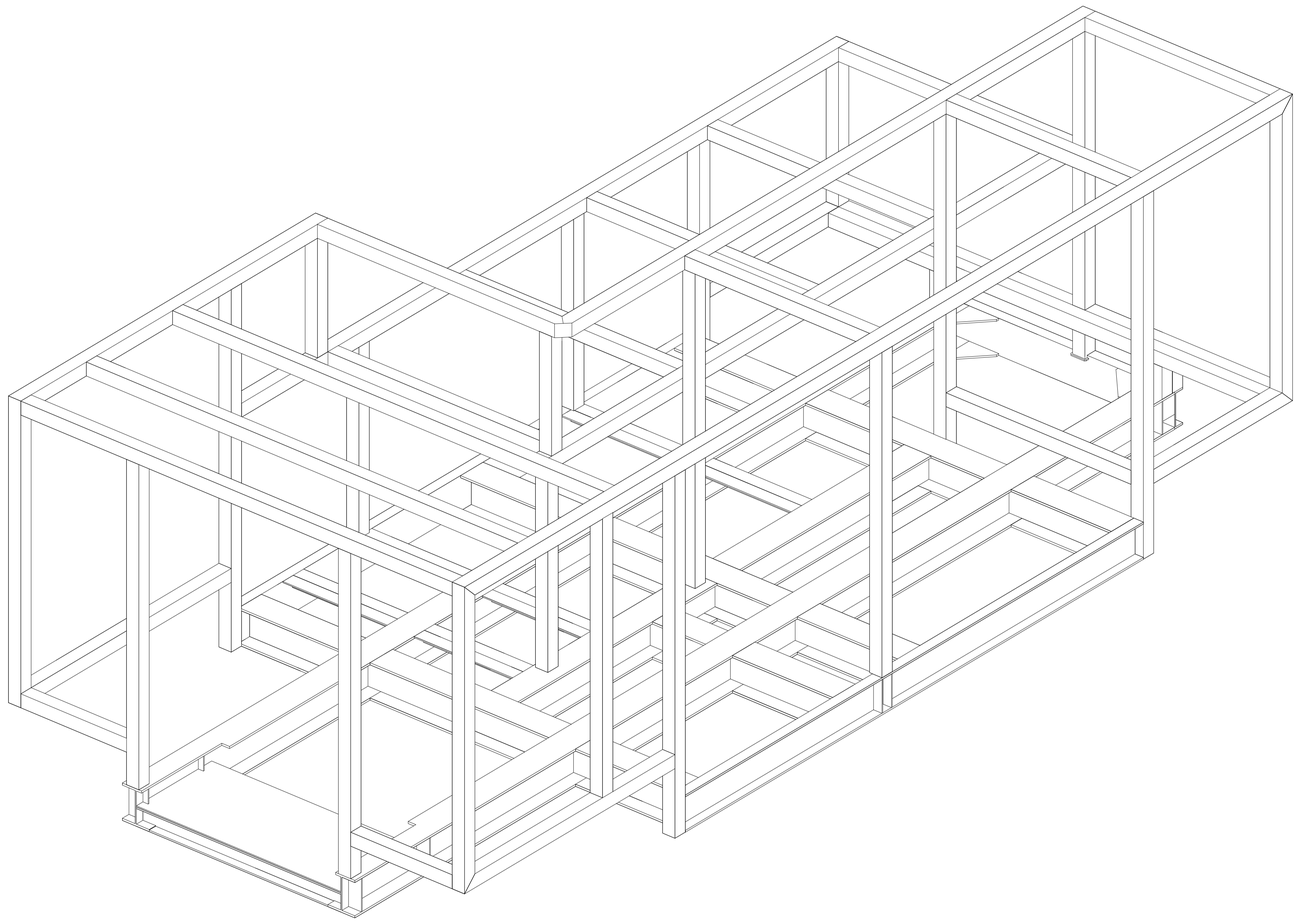

STRUCTURAL FRAME – ISOMETRIC

SCALE: NONE

MOD 10A MOD 25

GENERAL NOTES:

1. REMOVE BURRS AND BREAK SHARP EDGES.
2. UNLESS OTHERWISE SPECIFIED ON THE WELD SYMBOL, STEEL WELDING SHALL BE PERFORMED IN ACCORDANCE WITH NASA-SPEC-5004 AND AWS D1.1. INSPECTION SHALL BE PER NASA SPEC 5004, CLASS B (VISUAL AND MAGNETIC PARTICLE OR DYE PENETRANT)

   UNLESS OTHERWISE SPECIFIED ON THE WELDING SYMBOL, ALUMINUM WELDING SHALL BE PERFORMED IN ACCORDANCE WITH NASA-SPEC-5004 AND AWS D1.2. INSPECTION SHALL BE PER NASA-SPEC-5004, CLASS B (VISUAL AND DYE PENETRANT)
3. DELETED.
4. MATERIALS (UNLESS OTHERWISE NOTED):

   PRIMARY STRUCTURE:

   STRUCTURAL W AND CHANNEL SHAPES SHALL CONFORM TO ASTM A572-GRADE 50. STRUCTURAL PLATE AND ANGLES SHALL CONFORM TO ASTM A36 OR ASTM A572-GRADE 50. STRUCTURAL TUBING SHALL CONFORM TO ASTM A500-GRADE B.

   SECONDARY STRUCTURE (SEE SHEET S-9):

   STRUCTURAL SHAPES AND PLATE SHALL CONFORM TO ASTM A36 OR ASTM A572-GRADE 50.

   ALUMINUM AND ALUMINUM ALLOY SHEET AND PLATE SHALL BE PER ASTM B209.

   ALUMINUM AND ALUMINUM ALLOY SEAMLESS EXTRUDED TUBE SHALL BE PER ASTM B241.
5. STRUCTURAL STEEL SHALL BE FABRICATED AND ERECTED IN ACCORDANCE WITH THE AISC SPECIFICATION FOR THE DESIGN, FABRICATION, AND ERECTION OF STRUCTURAL STEEL FOR BUILDINGS AND CODE OF STANDARD PRACTICES FOR STEEL BUILDINGS AND BRIDGES.
6. PREPARE AND PAINT CARBON STEEL SURFACES PER NASA-STD-5008A, ZONE 3. TOP COAT TO BE WHITE, FED-STD-595, COLOR NUMBER: 17925.

   TOUCHUP OF WELDS AND DAMAGED COATINGS SHALL BE ACCOMPLISHED PER THE GUIDELINES IDENTIFIED IN NASA-STD-5008 PARAGRAPHS 4.4.3.8 AND 4.5.8, ALONG WITH TABLE 1, TO MATCH THE ORIGINAL FINISH.
7. STRUCTURAL DESIGN CRITERIA:

   THE PRIMARY STRUCTURAL FRAME HAS BEEN ANALYZED ACCORDING TO THE LOADS AND CRITERIA SHOWN ON SHEET S-12. CHANGES TO THE FRAME CONFIGURATION BY THE CONTRACTOR SHALL REQUIRE A STRUCTURAL ANALYSIS AND ACQUIRE WRITTEN APPROVAL FROM NASA.
8. INTERIOR CORROSION TREATMENT AND LEAK TEST OF STRUCTURAL TUBING:

   A. DRILL STRUCTURAL TUBING AND INSTALL 3/8 NPT SERIES 603-B. WELD IN TANK FLANGE AT ONE END OF EACH CLOSED STRUCTURAL TUBE AS SHOWN.

   B. FOLLOWING COMPLETION OF FABRICATION & ANY MODIFICATION ACTIVITIES, LEAK TEST EACH SECTION OF STRUCTURAL TUBING BY PRESSURIZING TO 5 PSIG WITH GASEOUS NITROGEN, NO PRESSURE LOSS SHALL BE NOTED FOR A PERIOD OF 15 MINUTES.

   C. PARAGRAPH DELETED.

   D. INSTALL ZERRUST VCI TUBE STRIPS THROUGH THREADED HOLES IN TUBES, ONE STRIP PER TUBE, NO MORE THAN 2" SHORTER THAN THE THE TUBE IT IS INSTALLED IN. AFTER STRIP INSERTION, INSTALL STEEL HEX HEAD PIPE PLUG TO SEAL TUBE. ZERRUST VCI TUBE STRIPS AVAILABLE FROM:

   NORTHERN TECHNOLOGIES INTERNATIONAL INC.
   6680 NORTH HIGHWAY 49
   LINO LAKES, MN 55014
   (OR APPROVED EQUAL)

MODIFICATION NOTES:

A. NO CLOSED, SEALED TUBING OR STRUCTURE SHALL BE PENETRATED WITHOUT PRIOR WRITTEN CONSENT.

MOD XX DENOTES MODIFICATION DETAIL.

SYM	ZONE	DESCRIPTION	DATE	APPROVAL

REVISIONS

SIGNATURES		DATE
DRAFTER	T. JOBE	05/06/11
CHECKER	D. MAY	05/06/11
ENGINEER	A. JACQUES	05/06/11
	R. WITHERSPOON	05/06/11
	R. FRANCO	05/06/11
SUBMITTED	T.O. ADAMS	05/06/11
APPROVED	E.A. THAXTON	DATE 05/06/11

NATIONAL AERONAUTICS AND SPACE ADMINISTRATION
JOHN F. KENNEDY SPACE CENTER, NASA
KENNEDY SPACE CENTER, FLORIDA

ASSEMBLY DRAWINGS

MPPU REFURBISHMENT DESIGN
ENVIRONMENTAL CONTROL SYSTEM
STRUCTURAL FRAMING

TITLE S-1

SIZE F | DWG. NO. 584F0301001 | REV –

PROJ. NO. 95255 | SHEET OF

P:\95255\DRAWINGS\STRUCS-1.DWG 27-APR-2011 16:23 JOBETL

KSC FORM 1-11 (REV. 3/76) (C/G 3/93)

FOR ANY PURPOSE OTHER THAN IN CONNECTION WITH A DEFINITELY RELATED GOVERNMENT PROCUREMENT OPERATION, THE UNITED STATES GOVERNMENT THEREBY INCURS NO RESPONSIBILITY NOR ANY OBLIGATION WHATSOEVER; AND THE FACT THAT THE GOVERNMENT MAY HAVE FORMULATED, FURNISHED, OR IN ANY WAY SUPPLIED THE SAD DRAWINGS, SPECIFICATIONS OR ANY OTHER DATA IS NOT TO BE REGARDED BY IMPLICATION OR OTHERWISE IN ANY MANNER LICENSING THE HOLDER OR ANY OTHER PERSONS OR CORPORATION, OR CONVEYING ANY RIGHTS OR PERMISSION TO MANUFACTURE, USE, OR SELL ANY PATENTED INVENTION THAT IN ANY WAY BE RELATED THERETO.

EAR 99 – NO LICENSE REQUIRED

The Information contained in this document is technical in content, but not technical data as defined by the International Traffic in Arms (ITAR) or the Export Administration Regulations (EAR), and therefore is EAR 99 NLR, meaning no license required, suitable for public release. (General Prohibition Six (Embargo) applies to all items subject to the EAR, i.e. items on the CCL and within EAR 99 NLR. You may not make an export or reexport contrary to the provisions of part 746 (Embargos and Other Special Controls) of the EAR and 22 CFR part 126.1 of the ITAR).

EDDR # 113043 : NASA KSC Export Control Office (321- 867-9209)

SPECIFIC NOTES:

A. CROSBY G-2130 GALVANIZED 8.5 TON BOLT TYPE SHACKLE
STOCK NO. 1019551
CROSBY GROUP INC.
P. O. BOX 3128
TULSA, OK 74101-3128 (918)834-4611
(OR APPROVED EQUAL)

B. HOLLAND HITCH CO.
467 OTTAWA AVE.
HOLLAND, MI 49422
(616) 396-6501
(OR APPROVED EQUAL)

C. NOTATION "BS" INDICATES PIPE PLUG FLANGE ON BACK SIDE OF FRAME TUBE.

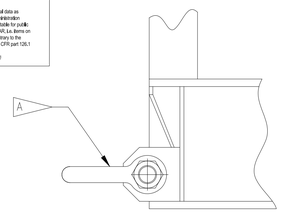

VIEW N (2 PLACES)
SCALE: 3"=1'-0"

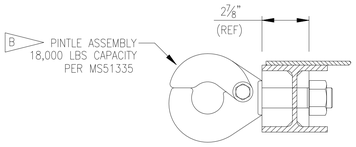

SECTION M
SCALE: 3"=1'-0"

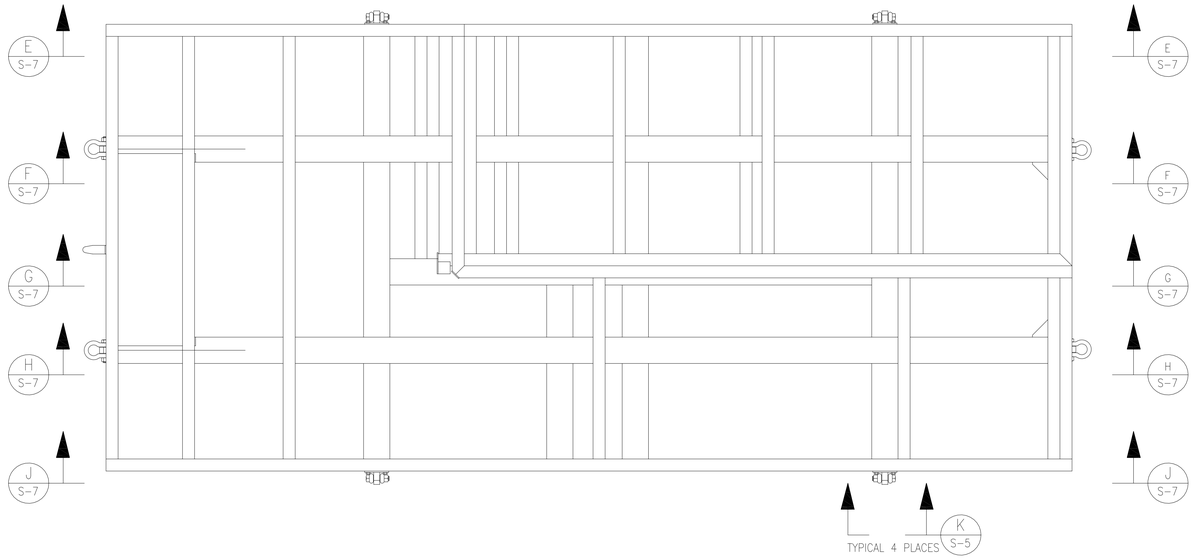

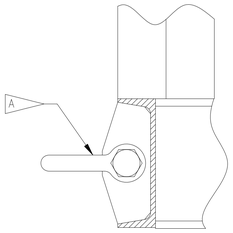

SECTION L (2 PLACES)
SCALE: 3"=1'-0"

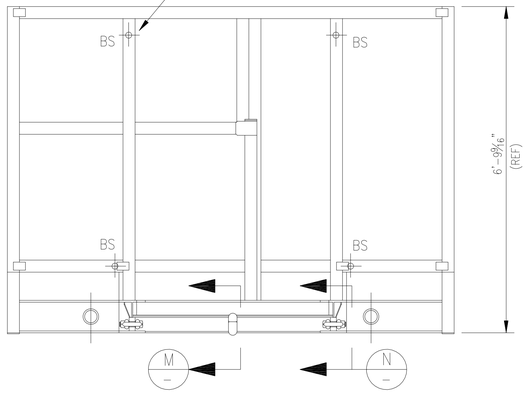

REAR VIEW

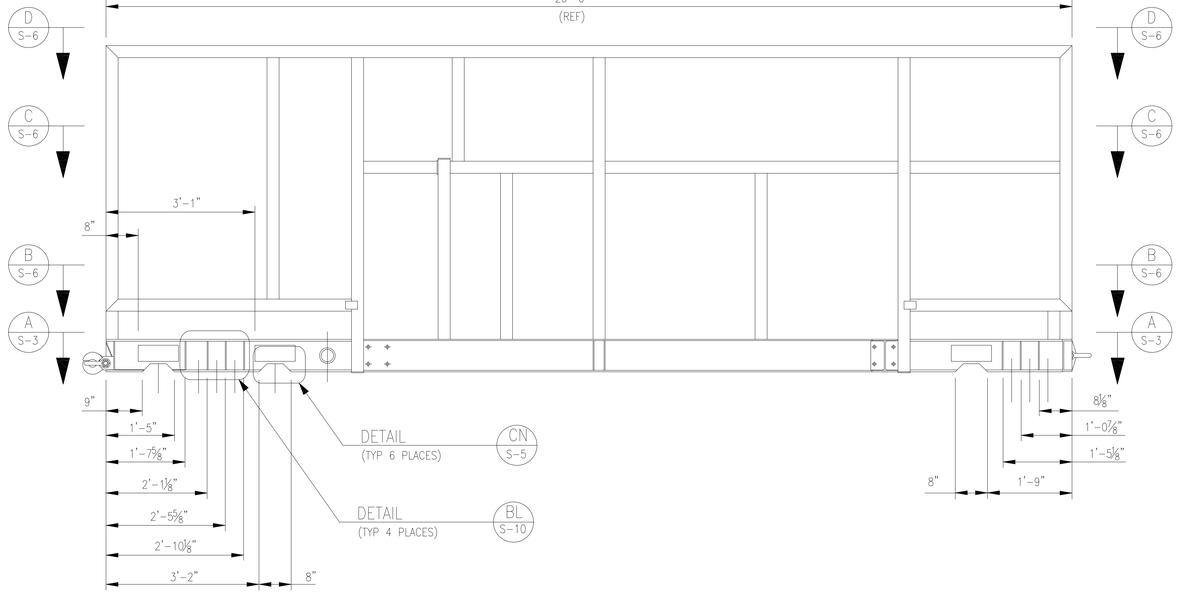

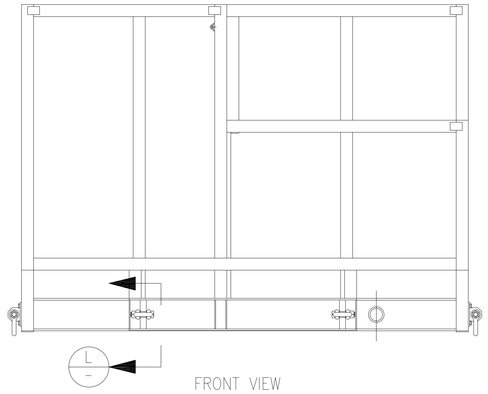

FRONT VIEW

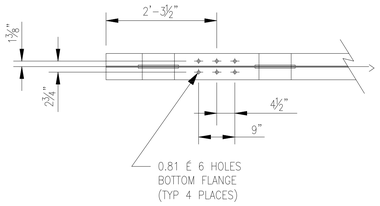

ELEVATION – STRUCTURAL FRAME
SCALE: 3/4"=1'-0"

NOTE: SECONDARY SUPPORT MEMBERS NOT SHOWN, SEE DETAIL BJ S-9 FOR ADDITIONAL STRUCTURE

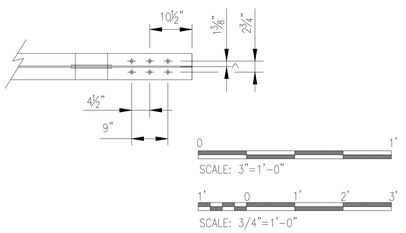

THIS SHEET IS REFERENCE ONLY COPIED FROM 80K57281

SYM	ZONE	DESCRIPTION	DATE	APPROVAL
		REVISIONS		

SIGNATURES	DATE
DRAFTER	
CHECKER	
ENGINEER	
SUBMITTED	
APPROVED	DATE
TITLE	

NATIONAL AERONAUTICS AND SPACE ADMINISTRATION
JOHN F. KENNEDY SPACE CENTER, NASA
KENNEDY SPACE CENTER, FLORIDA

ASSEMBLY DRAWINGS
MPPU REFURBISHMENT DESIGN
ENVIRONMENTAL CONTROL SYSTEM
STRUCTURAL FRAMING

SIZE	DWG. NO.	REV
F	584F0301001	—
PROJ. NO. 95255	SHEET	OF

S-2

P:\95255\DRAWINGS\STRUS-2.DWG 07-APR-2011 11:07 JOBETL

KSC FORM 1-11 (REV. 3/76) (C/G 3/93)

FOR ANY PURPOSE OTHER THAN IN CONNECTION WITH A DEFINITELY RELATED GOVERNMENT PROCUREMENT OPERATION, THE UNITED STATES GOVERNMENT THEREBY INCURS NO RESPONSIBILITY NOR ANY OBLIGATION WHATSOEVER; AND THE FACT THAT THE GOVERNMENT MAY HAVE FORMULATED, FURNISHED, OR IN ANY WAY SUPPLIED THE SAID DRAWINGS, SPECIFICATIONS OR ANY OTHER DATA IS NOT TO BE REGARDED BY IMPLICATION OR OTHERWISE IN ANY MANNER LICENSING THE HOLDER OR ANY OTHER PERSONS OR CORPORATION, OR CONVEYING ANY RIGHTS OR PERMISSION TO MANUFACTURE, USE, OR SELL ANY PATENTED INVENTION THAT IN ANY WAY BE RELATED THERETO.

EAR 99 - NO LICENSE REQUIRED

The information contained in this document is technical in content, but not technical data as defined by the International Traffic in Arms (ITAR) or the Export Administration Regulations (EAR), and therefore is EAR 99 NLR, meaning no license required, suitable for public release. (General Prohibition Six (Embargo) applies to all items subject to the EAR, i.e. items on the CCL and within EAR 99 NLR. You may not make an export or reexport contrary to the provisions of part 746 (Embargos and Other Special Controls) of the EAR and 22 CFR part 126.1 of the ITAR).

EDDR # 113043 - NASA KSC Export Control Office (321- 867-9209)

GENERAL NOTES:

1. SEE DRAWING S-1 FOR GENERAL NOTES.

SPECIFIC NOTES:

A. IF UTILIZED, REMOVE BACKING BARS AND WELD TABS PER AWS D1.1 REQUIREMENTS FOR DYNAMICALLY LOADED STRUCTURES.

B. FIELD VERIFY ANGLE RELOCATION WITH PLENUM SUPPORT.

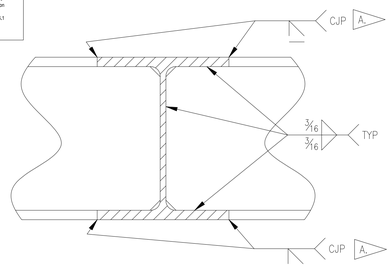

SECTION P (TYPICAL)
SCALE: 3"=1'-0"

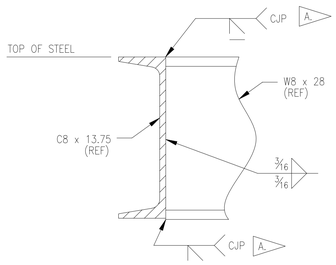

SECTION R (TYPICAL)
SCALE: 3"=1'-0"

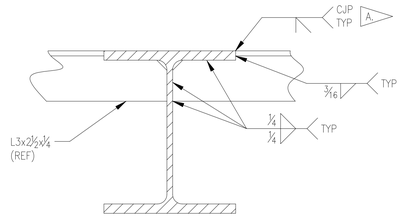

SECTION S (TYPICAL)
SCALE: 3"=1'-0"

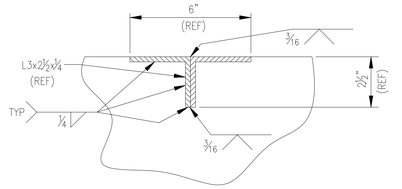

SECTION T (TYPICAL)
SCALE: 3"=1'-0"

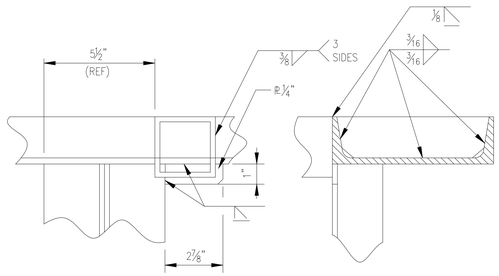

DETAIL Y
SCALE: 3"=1'-0"

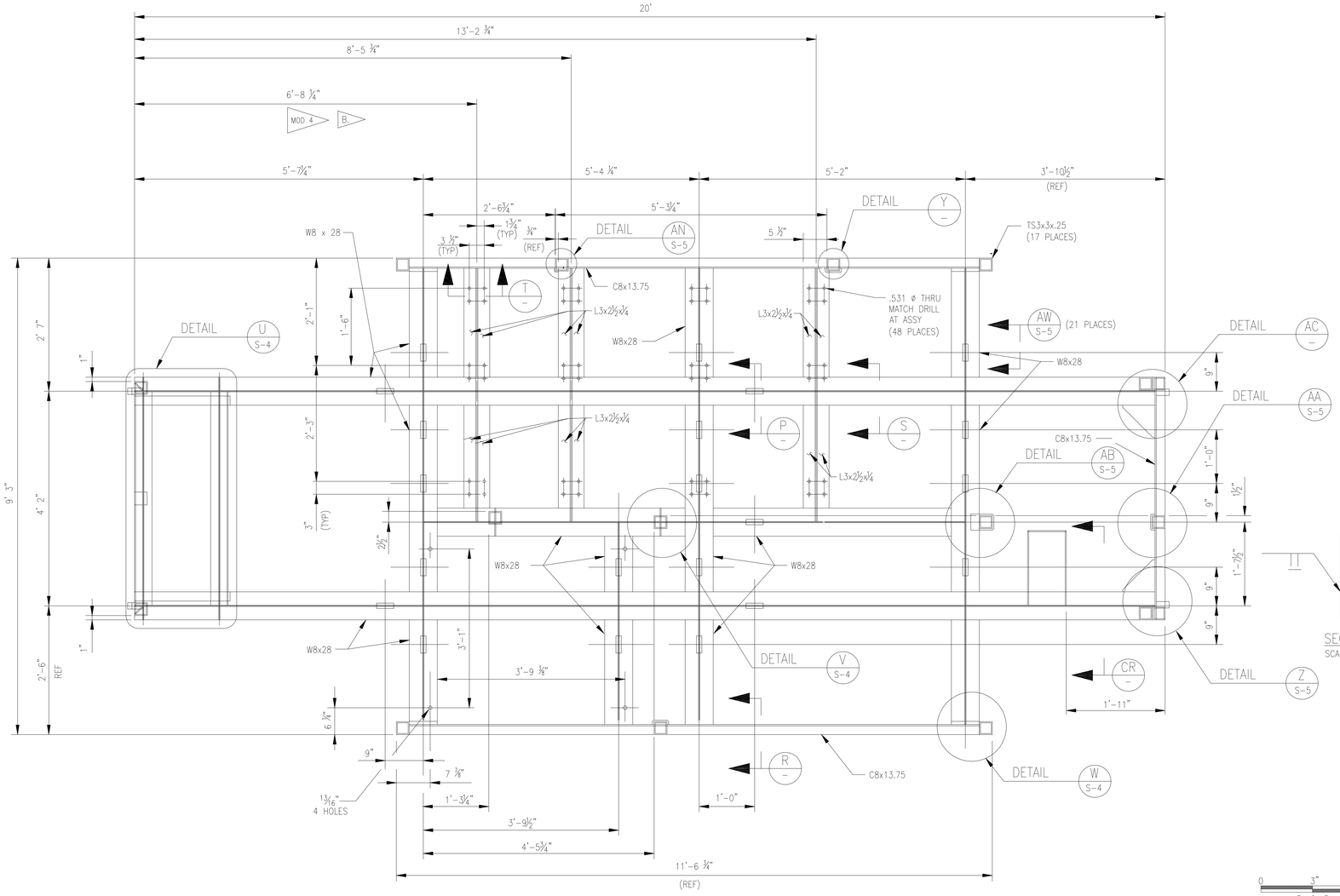

SECTION A
SCALE: 1"=1'-0"

DETAIL AC
SCALE: 1 1/2"=1'-0"

0 3" 6" 9" 12"
SCALE: 3"=1' 0"

1' 0 1'
SCALE: 1½"=1' 0"

1' 0 1' 2'
SCALE: 1"=1' 0"

SYM	ZONE	DESCRIPTION	DATE	APPROVAL
		REVISIONS		

SIGNATURES		DATE
DRAFTER	T. JOBE	05/06/11
CHECKER	D. MAY	05/06/11
ENGINEER	A. JACQUES	05/06/11
	R. WITHERSPOON	05/06/11
	R. FRANCO	05/06/11
SUBMITTED	T.O. ADAMS	05/06/11
APPROVED	E.A. THAXTON	05/06/11

NATIONAL AERONAUTICS AND SPACE ADMINISTRATION
JOHN F. KENNEDY SPACE CENTER, NASA
KENNEDY SPACE CENTER, FLORIDA

ASSEMBLY DRAWINGS

MPPU REFURBISHMENT DESIGN
ENVIRONMENTAL CONTROL SYSTEM
STRUCTURAL FRAMING

SIZE F | DWG. NO. 584F0301001 | REV —

TITLE | PROJ. NO. 95255 | SHEET | OF

S-3

P:\95255\DRAWINGS\STRUS\S-3.DWG 21-FEB-2011 08:18 JOBETL

KSC FORM 1-11 (REV. 3/76) (C/G 3/93)

FOR ANY PURPOSE OTHER THAN IN CONNECTION WITH A DEFINITELY RELATED GOVERNMENT PROCUREMENT OPERATION, THE UNITED STATES GOVERNMENT THEREBY INCURS NO RESPONSIBILITY NOR ANY OBLIGATION WHATSOEVER; AND THE FACT THAT THE GOVERNMENT MAY HAVE FORMULATED, FURNISHED, OR IN ANY WAY SUPPLIED THE SAID DRAWINGS, SPECIFICATIONS OR ANY OTHER DATA IS NOT TO BE REGARDED BY IMPLICATION OR OTHERWISE IN ANY MANNER LICENSING THE HOLDER OR ANY OTHER PERSONS OR CORPORATION, OR CONVEYING ANY RIGHTS OR PERMISSION TO MANUFACTURE, USE, OR SELL ANY PATENTED INVENTION THAT IN ANY WAY BE RELATED THERETO.

EAR 99 - NO LICENSE REQUIRED

The information contained in this document is technical in content, but not technical data as defined by the International Traffic in Arms (ITAR) or the Export Administration Regulations (EAR), and therefore is EAR 99 NLR, meaning no license required, suitable for public release. (General Prohibition Six (Embargo) applies to all items subject to the EAR, i.e. items on the CCL and within EAR 99 NLR. You may not make an export or reexport contrary to the provisions of part 746 (Embargos and Other Special Controls) of the EAR and 22 CFR part 126.1 of the ITAR).

EDDR # 113043 : NASA KSC Export Control Office (321- 867-9209)

EAR 99

SPECIFIC NOTES:

A IF UTILIZED, REMOVE BACKING BARS AND WELD TABS PER AWS D1.1 REQUIREMENTS FOR DYNAMICALLY LOADED STRUCTURES.

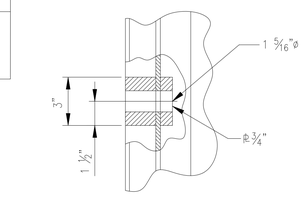

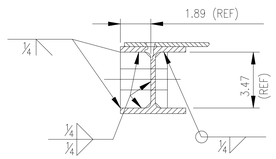

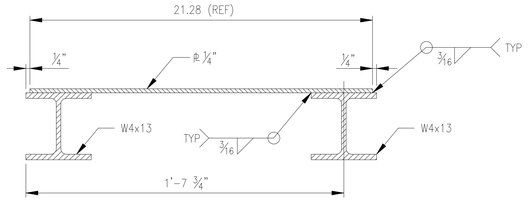

SECTION AH
SCALE: 3"=1'-0"

SECTION AJ
SCALE: 3"=1'-0"

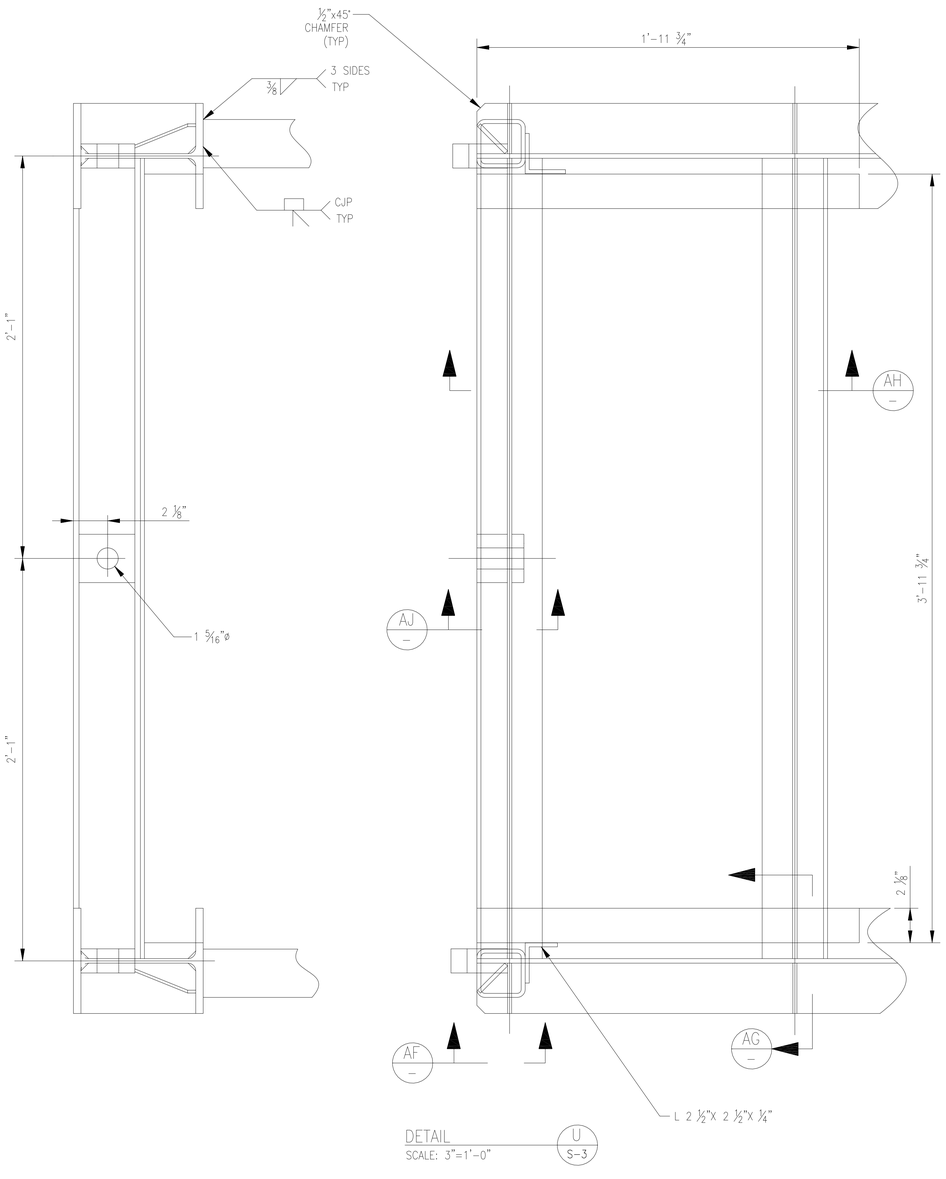

DETAIL SCALE: 3"=1'-0" U S-3

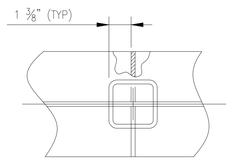

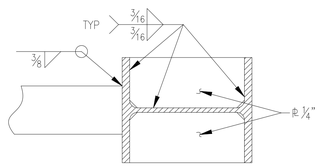

SECTION V S-3 (TYPICAL 2 PLACES)
SCALE: 3"=1'-0"

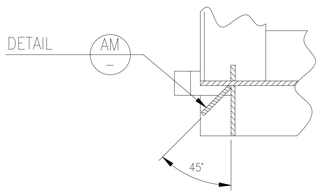

SECTION AL
SCALE: 3"=1'-0"

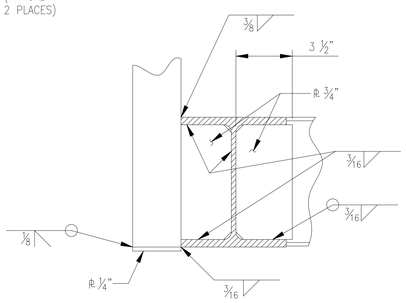

SECTION AE
SCALE: 3"=1'-0"

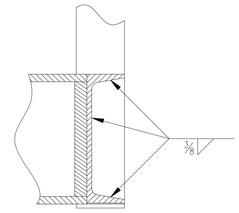

SECTION AD
SCALE: 3"=1'-0"

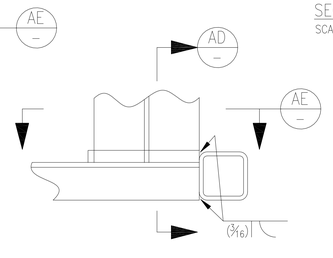

DETAIL SCALE: 3"=1'-0" W S-3 (TYPICAL 4 PLACES)

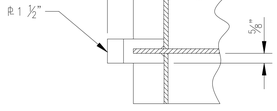

SECTION AK
SCALE: 3"=1'-0"

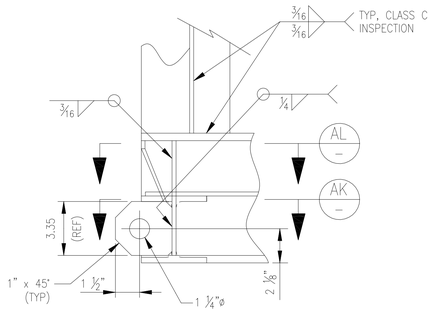

VIEW AF (TYPICAL)
SCALE: 3"=1'-0"

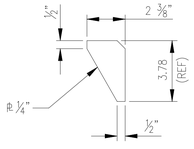

DETAIL SCALE: 3"=1'-0" AM

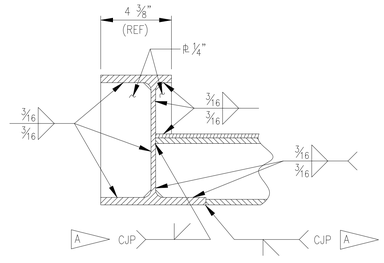

SECTION AG (4 PLACES)
SCALE: 3"=1'-0"

THIS SHEET IS REFERENCE ONLY COPIED FROM 80K57281

0 3" 6" 9" 12"
SCALE: 3"= 1' 0"

SYM	ZONE	DESCRIPTION	DATE	APPROVAL

REVISIONS

SIGNATURES	DATE
DRAFTER	
CHECKER	
ENGINEER	
SUBMITTED	
APPROVED	DATE

NATIONAL AERONAUTICS AND SPACE ADMINISTRATION
JOHN F. KENNEDY SPACE CENTER, NASA
KENNEDY SPACE CENTER, FLORIDA

ASSEMBLY DRAWINGS
MPPU REFURBISHMENT DESIGN
ENVIRONMENTAL CONTROL SYSTEM
STRUCTURAL FRAMING

TITLE

SIZE F | DWG. NO. 584F0301001 | REV —
PROJ. NO. 95255 | SHEET | OF

S-4

P:\95255\DRAWINGS\STRUS-4.DWG 25-JAN-2011 11:19 JOBETL

KSC FORM 1-11 (REV. 3/76) (C/G 3/93)

EAR 99

FOR ANY PURPOSE OTHER THAN IN CONNECTION WITH A DEFINITELY RELATED GOVERNMENT PROCUREMENT OPERATION, THE UNITED STATES GOVERNMENT THEREBY INCURS NO RESPONSIBILITY NOR ANY OBLIGATION WHATSOEVER; AND THE FACT THAT THE GOVERNMENT MAY HAVE FORMULATED, FURNISHED, OR IN ANY WAY SUPPLIED THE SAID DRAWINGS, SPECIFICATIONS OR ANY OTHER DATA IS NOT TO BE REGARDED BY IMPLICATION OR OTHERWISE IN ANY MANNER LICENSING THE HOLDER OR ANY OTHER PERSONS OR CORPORATION, OR CONVEYING ANY RIGHTS OR PERMISSION TO MANUFACTURE, USE, OR SELL ANY PATENTED INVENTION THAT IN ANY WAY BE RELATED THERETO.

EAR 99 - NO LICENSE REQUIRED

The information contained in this document is technical in content, but not technical data as defined by the International Traffic in Arms (ITAR) or the Export Administration Regulations (EAR), and therefore is EAR 99 NLR, no export license required, suitable for public release. (General Prohibition Six (Embargo) applies to all items subject to the EAR, i.e. items on the CCL and within EAR 99 NLR. You may not make an export or reexport contrary to the provisions of part 746 (Embargos and Other Special Controls) of the EAR and 22 CFR part 126.1 of the ITAR).

EDDR # 113043 : NASA KSC Export Control Office (321- 867-9209)

EAR 99

SPECIFIC NOTES:

A. CROSBY G-2130 GALVANIZED 8.5 TON BOLT TYPE SHACKLE
STOCK NO. 1019551
CROSBY GROUP INC.
P. O. BOX 3128
TULSA, OK 74101-3128 (918)834-4611
(OR APPROVED EQUAL)

B. MATERIALS SHALL BE SELECTED FROM ALLOYS THAT ARE HIGHLY RESISTANT TO STRESS CORROSION CRACKING AS SPECIFIED IN KSC-STD-Z-0004. MINIMUM SAFETY FACTORS SHALL BE: 2 TO 1 ON YIELD AND 3 TO 1 ON ULTIMATE MATERIAL STRENGTH.

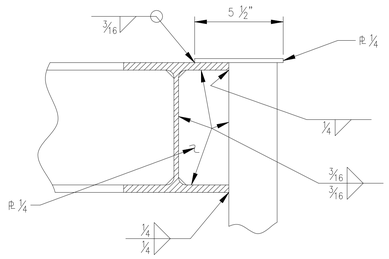

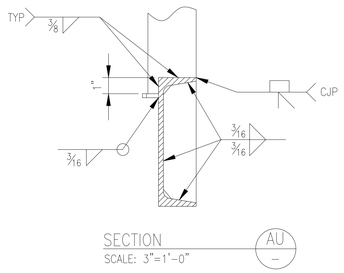

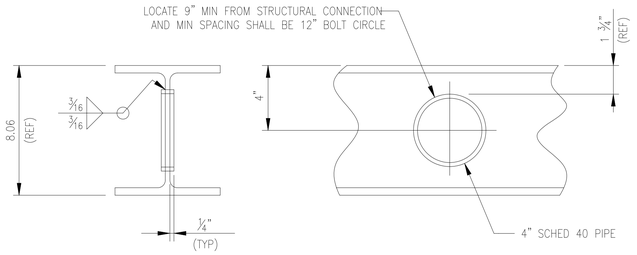

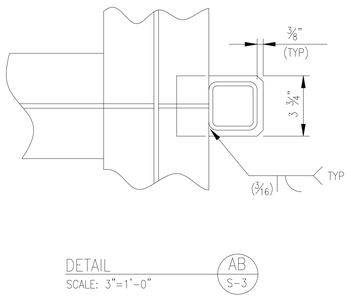

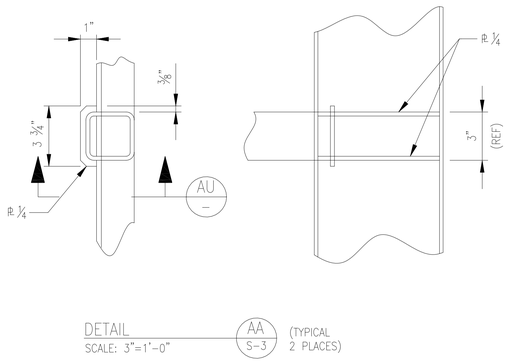

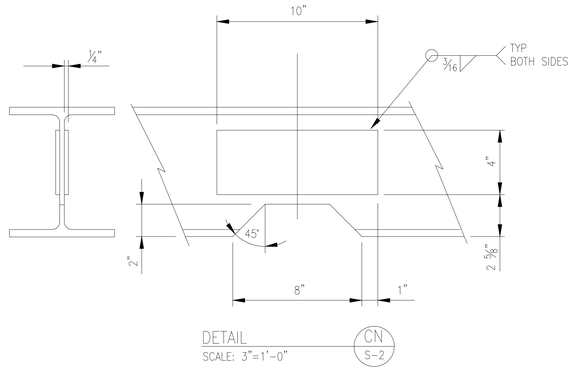

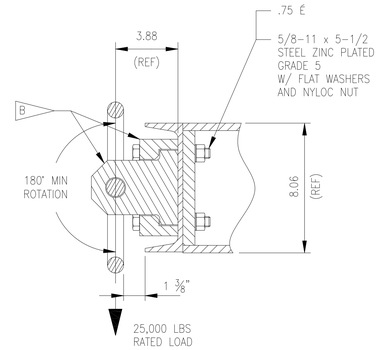

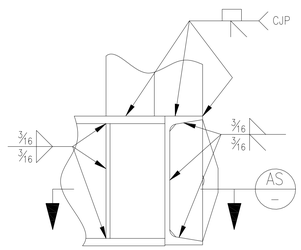

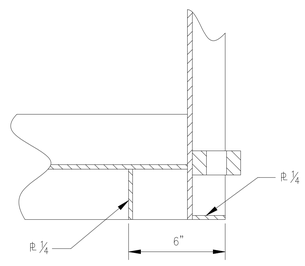

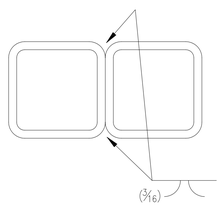

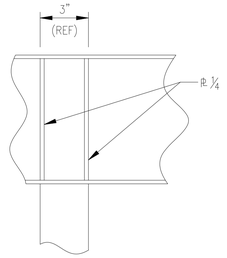

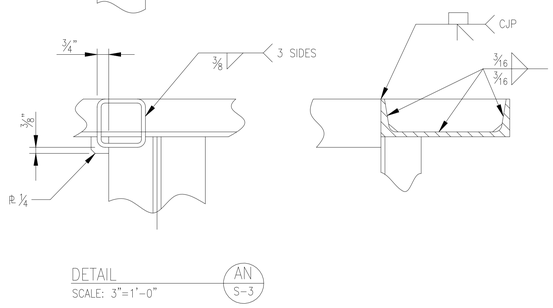

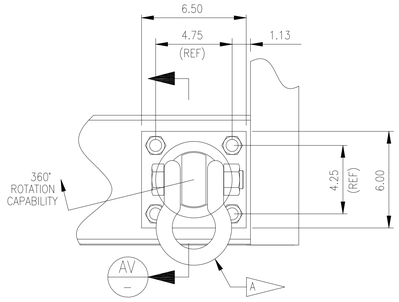

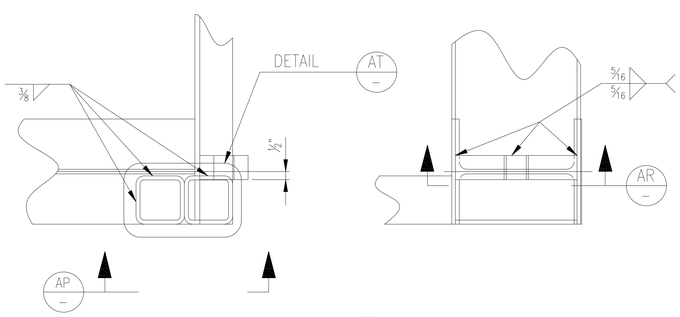

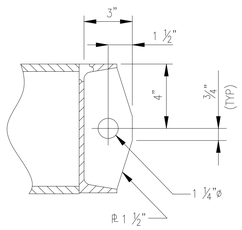

THIS SHEET IS REFERENCE ONLY COPIED FROM 80K57281

0 3" 6"
SCALE: 6"= 1' 0"

0 3" 6" 9" 12"
SCALE: 3"= 1' 0"

SYM	ZONE	DESCRIPTION	DATE	APPROVAL
		REVISIONS		

SIGNATURES	DATE
DRAFTER	
CHECKER	
ENGINEER	
SUBMITTED	
APPROVED	DATE
TITLE	

NATIONAL AERONAUTICS AND SPACE ADMINISTRATION
JOHN F. KENNEDY SPACE CENTER, NASA
KENNEDY SPACE CENTER, FLORIDA

ASSEMBLY DRAWINGS
MPPU REFURBISHMENT DESIGN
ENVIRONMENTAL CONTROL SYSTEM
STRUCTURAL FRAMING

SIZE F | DWG. NO. 584F0301001 | REV —
PROJ. NO. 95255 | SHEET | OF

S-5

P:\95255\DRAWINGS\STR\S-5.DWG 25-JAN-2011 15:11 JOBETL

KSC FORM 1-11 (REV. 3/76) (C/G 3/93)

EAR 99

FOR ANY PURPOSE OTHER THAN IN CONNECTION WITH A DEFINITELY RELATED GOVERNMENT PROCUREMENT OPERATION, THE UNITED STATES GOVERNMENT THEREBY INCURS NO RESPONSIBILITY NOR ANY OBLIGATION WHATSOEVER, AND THE FACT THAT THE GOVERNMENT MAY HAVE FORMULATED, FURNISHED, OR IN ANY WAY SUPPLIED THE SAID DRAWINGS, SPECIFICATIONS OR ANY OTHER DATA IS NOT TO BE REGARDED BY IMPLICATION OR OTHERWISE IN ANY MANNER LICENSING THE HOLDER OR ANY OTHER PERSONS OR CORPORATION, OR CONVEYING ANY RIGHTS OR PERMISSION TO MANUFACTURE, USE, OR SELL ANY PATENTED INVENTION THAT IN ANY WAY BE RELATED THERETO.

EAR 99 - NO LICENSE REQUIRED

The information contained in the document is technical in content, but not technical data as defined by the International Traffic in Arms Regulations (ITAR) or the Export Administration Regulations (EAR), and therefore is EAR 99 NLR, no export license required, suitable for public release. (General Prohibition Six (Embargo) applies to all items subject to the EAR, i.e. items on the CCL and within EAR 99 NLR. You may not make an export or reexport contrary to the provisions of part 746 (Embargos and Other Special Controls) of the EAR and 22 CFR part 126.1 of the ITAR).

EDDR # 113043 : NASA KSC Export Control Office (321- 867-6008)

R ¼	⅜	¾	¼
R 1 ½"	(¾)		
3/4"	⅜"	L 2½× 2½× ¼"	
3/4"	1 ¼"×	L 1½"× 1½"× ¾"	

SPECIFIC NOTES:

A NOTATION "BS" INDICATES PIPE PLUG FLANGE ON BACK SIDE OF FRAME TUBE, FOR HOLE LOCATION AND INSTALLATION SEE DETAIL CP ON SHEET S-8.

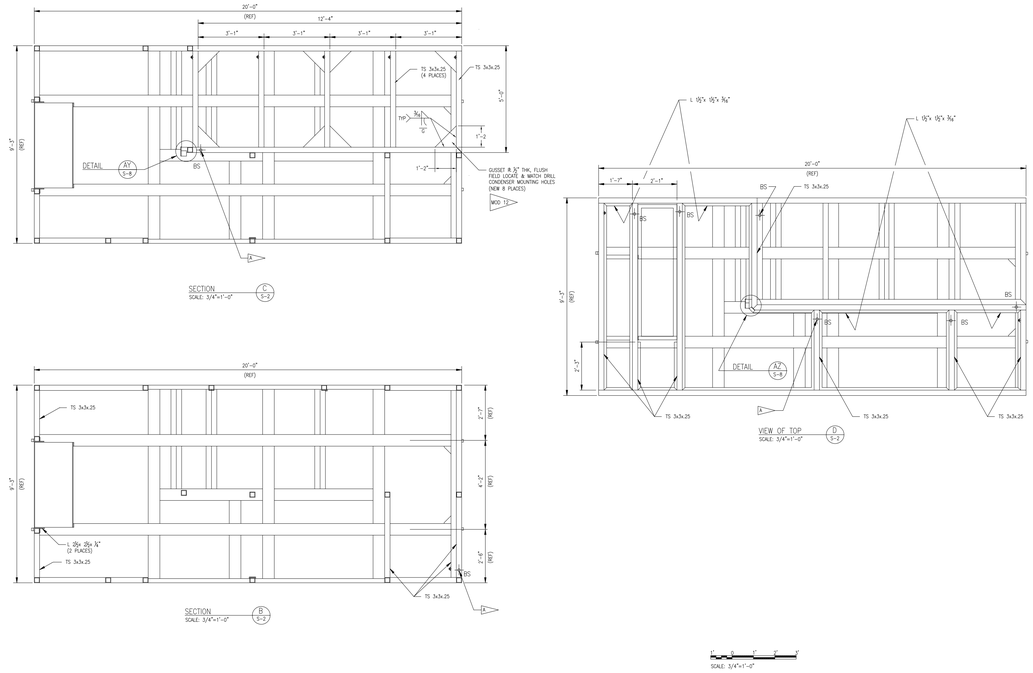

SYM	ZONE	DESCRIPTION	DATE	APPROVAL
		REVISIONS		

SIGNATURES		DATE
DRAFTER	T. JOBE	05/06/11
CHECKER	D. MAY	05/06/11
ENGINEER	A. JACQUES	05/06/11
	R. WITHERSPOON	05/06/11
	R. FRANCO	05/06/11
SUBMITTED	T.O. ADAMS	05/06/11
APPROVED	E.A. THAXTON	DATE 05/06/11
TITLE		

NATIONAL AERONAUTICS AND SPACE ADMINISTRATION
JOHN F. KENNEDY SPACE CENTER, NASA
KENNEDY SPACE CENTER, FLORIDA

ASSEMBLY DRAWINGS

MPPU REFURBISHMENT DESIGN
ENVIRONMENTAL CONTROL SYSTEM
STRUCTURAL FRAMING

SIZE F | DWG. NO. 584F0301001 | REV –

PROJ. NO. 95255 | SHEET | OF

S-6

P:\95255\DRAWINGS\STRU\S-6.DWG 22-FEB-2011 12:56 JOBETL

KSC FORM 1-11 (REV. 3/76) (C/G 3/93)

FOR ANY PURPOSE OTHER THAN IN CONNECTION WITH A DEFINITELY RELATED GOVERNMENT PROCUREMENT OPERATION, THE UNITED STATES GOVERNMENT THEREBY INCURS NO RESPONSIBILITY NOR ANY OBLIGATION WHATSOEVER; AND THE FACT THAT THE GOVERNMENT MAY HAVE FORMULATED, FURNISHED, OR IN ANY WAY SUPPLIED THE SAID DRAWINGS, SPECIFICATIONS OR ANY OTHER DATA IS NOT TO BE REGARDED BY IMPLICATION OR OTHERWISE IN ANY MANNER LICENSING THE HOLDER OR ANY OTHER PERSONS OR CORPORATION, OR CONVEYING ANY RIGHTS OR PERMISSION TO MANUFACTURE, USE, OR SELL ANY PATENTED INVENTION THAT IN ANY WAY BE RELATED THERETO.

EAR 99 – NO LICENSE REQUIRED

The Information contained in this document is technical in content, but not technical data as defined by the International Traffic in Arms (ITAR) or the Export Administration Regulations (EAR), and therefore is EAR 99 NLR. Accordingly, it is not export regulated, suitable for public release. (General Prohibition Six (Embargo) applies to all items subject to the EAR, i.e. items on the CCL and within EAR 99 NLR. You may not make an export or reexport contrary to the provisions of part 746 (Embargos and Other Special Controls) of the EAR and 22 CFR part 126.1 of the ITAR).

EDDR # 113043 : NASA KSC Export Control Office (321- 867- 6039)

EAR 99

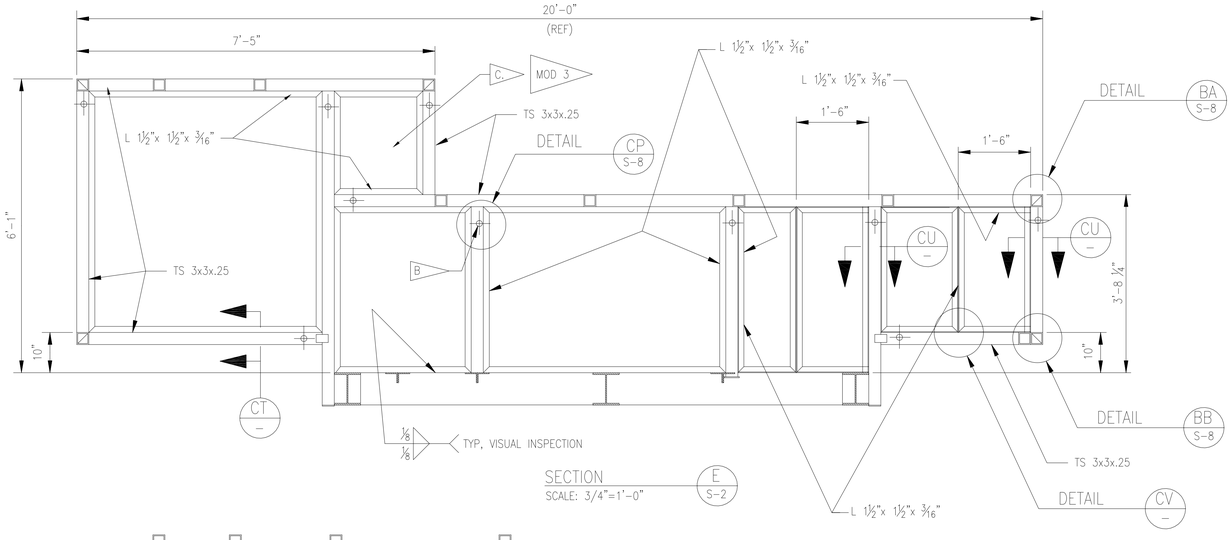

SECTION E S-2
SCALE: 3/4"=1'-0"

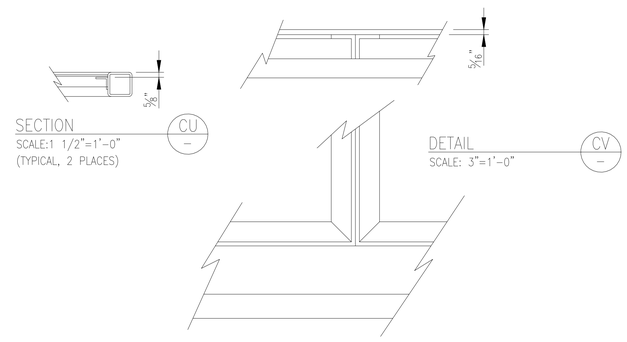

SECTION CU —
SCALE:1 1/2"=1'-0"
(TYPICAL, 2 PLACES)

DETAIL CV —
SCALE: 3"=1'-0"

SPECIFIC NOTES:

A. REFERENCE SECTIONS A, C, D & E FOR COMPLETE DIMENSIONING.

B. NOTATION "BS" INDICATES PIPE PLUG FLANGE ON BACK SIDE OF FRAME TUBE. FOR HOLE LOCATION AND INSTALLATION SEE DETAIL CP ON SHEET S-8.

C. MODIFY/REPLACE SECONDARY SUPPORTS IN ACCORDANCE W/CONDENSER FAN CONTROL ENCLOSURE (SPEC SECTION 11820).

SECTION H S-2
SCALE: 3/4"=1'-0"

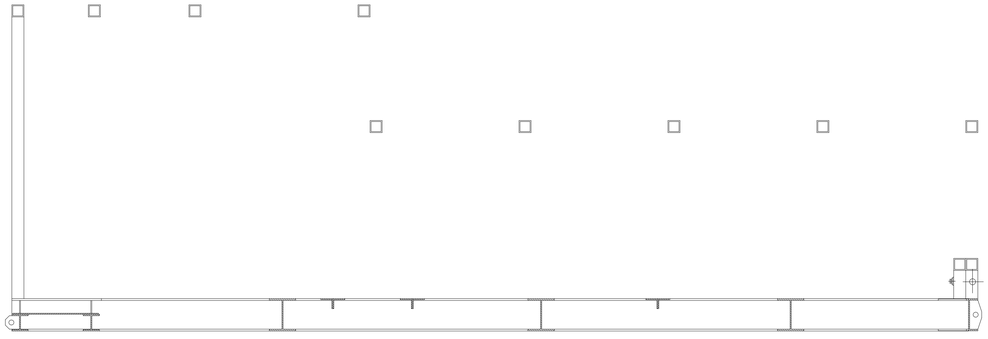

SECTION F S-2
SCALE: 3/4"=1'-0"

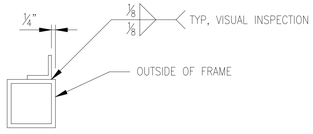

SECTION CT —
SCALE: 3"=1'-0"

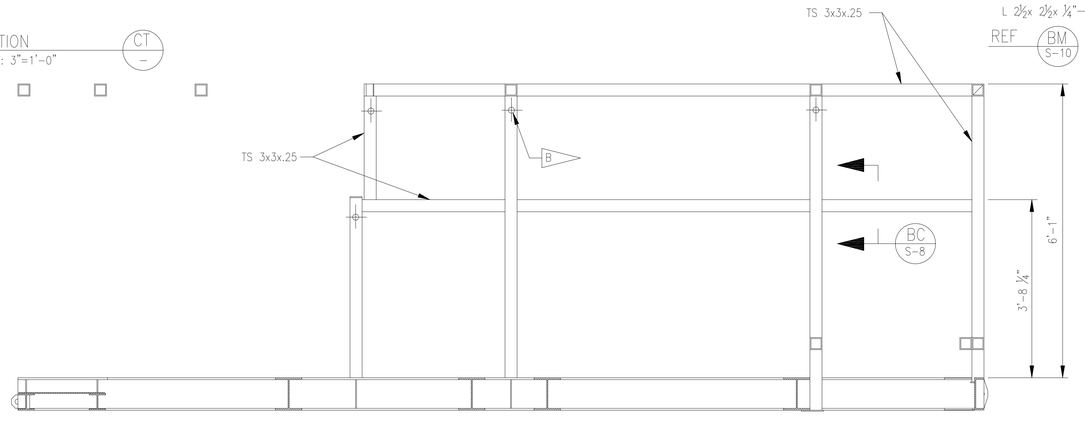

SECTION G S-2
SCALE: 3/4"=1'-0"

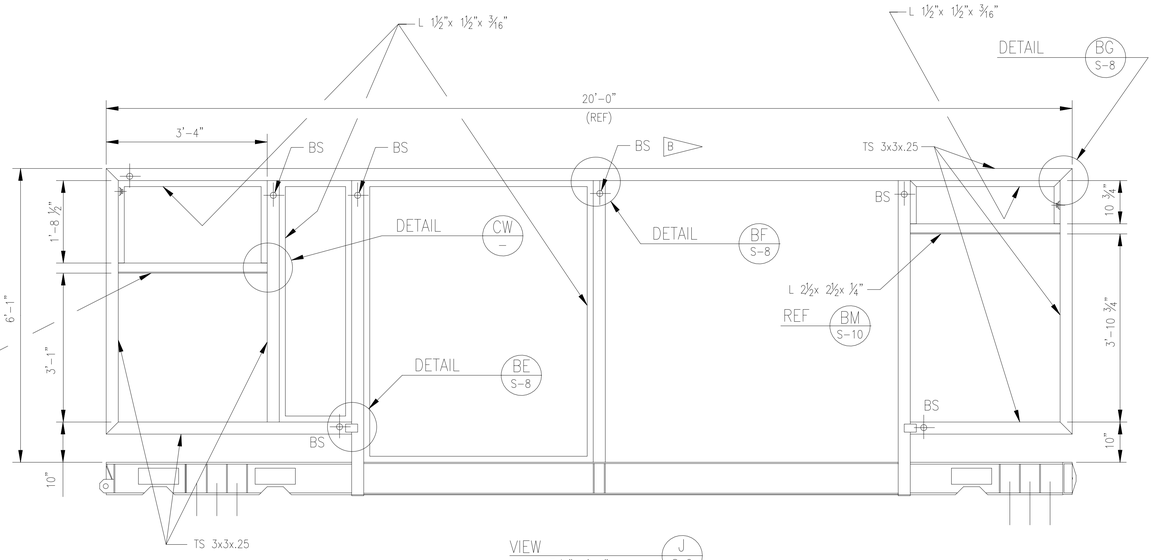

VIEW J S-2
SCALE: 3/4"=1'-0"

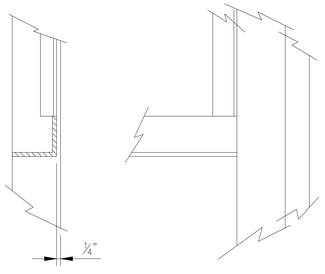

VIEW CW —
SCALE: 3/4"=1'-0"

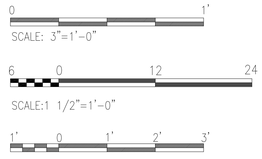

SYM	ZONE	DESCRIPTION	DATE	APPROVAL
		REVISIONS		

SIGNATURES		DATE
DRAFTER	T. JOBE	05/06/11
CHECKER	D. MAY	05/06/11
ENGINEER	A. JACQUES	05/06/11
	R. WITHERSPOON	05/06/11
	R. FRANCO	05/06/11
SUBMITTED	T.O. ADAMS	05/06/11
APPROVED	E.A. THAXTON	05/06/11

NATIONAL AERONAUTICS AND SPACE ADMINISTRATION
JOHN F. KENNEDY SPACE CENTER, NASA
KENNEDY SPACE CENTER, FLORIDA

ASSEMBLY DRAWINGS

MPPU REFURBISHMENT DESIGN ENVIRONMENTAL CONTROL SYSTEM STRUCTURAL FRAMING

TITLE

SIZE F | DWG. NO. 584F0301001 | REV —

PROJ. NO. 95255 | SHEET | OF

P:\95255\DRAWINGS\STR\S-7.DWG | 21-FEB-2011 09:47 | JOBETL

S-7

EAR 99

KSC FORM 1-11 (REV. 3/76) (C/G 3/93)

FOR ANY PURPOSE OTHER THAN IN CONNECTION WITH A DEFINITELY RELATED GOVERNMENT PROCUREMENT OPERATION, THE UNITED STATES GOVERNMENT THEREBY INCURS NO RESPONSIBILITY NOR ANY OBLIGATION WHATSOEVER; AND THE FACT THAT THE GOVERNMENT MAY HAVE FORMULATED, FURNISHED, OR IN ANY WAY SUPPLIED THE SAID DRAWINGS, SPECIFICATIONS OR ANY OTHER DATA IS NOT TO BE REGARDED BY IMPLICATION OR OTHERWISE IN ANY MANNER LICENSING THE HOLDER OR ANY OTHER PERSONS OR CORPORATION, OR CONVEYING ANY RIGHTS OR PERMISSION TO MANUFACTURE, USE, OR SELL ANY PATENTED INVENTION THAT IN ANY WAY BE RELATED THERETO.

EAR 99 – NO LICENSE REQUIRED

The Information contained in this document is technical in content, but not technical data as defined by the International Traffic in Arms (ITAR) or the Export Administration Regulations (EAR), and therefore is EAR 99 NLR, meaning no license required, suitable for public release. (General Prohibition Six (Embargo) applies to all items subject to the EAR, i.e. items on the CCL and within EAR 99 NLR. You may not make an export or reexport contrary to the provisions of part 746 (Embargos and Other Special Controls) of the EAR and 22 CFR part 126.1 of the ITAR).

EDDR # 113043 : NASA KSC Export Control Office (321- 867- 6039)

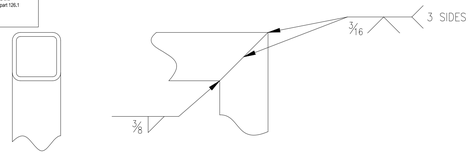

DETAIL SCALE: 3"=1'-0" — BG S-7 (TYPICAL MITRE JOINT)

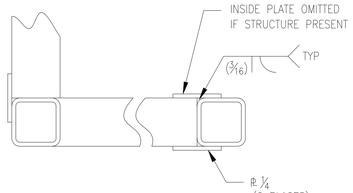

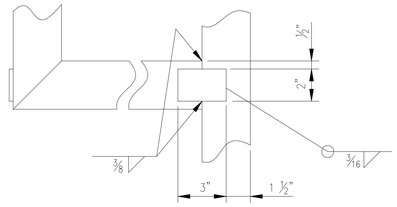

DETAIL SCALE: 3"=1'-0" — BE S-7 (TYPICAL T-JOINT WITH CANTILEVERED MEMBER)

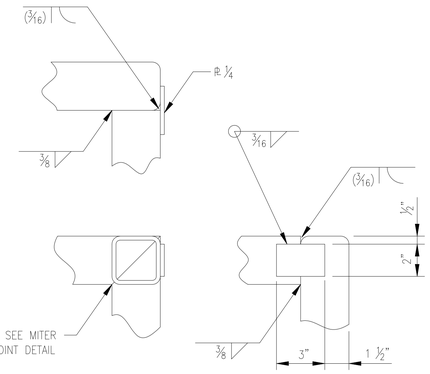

DETAIL SCALE: 3"=1'-0" — BA S-7 (TYPICAL CORNER JOINT)

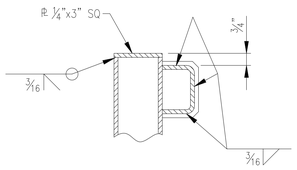

SECTION SCALE: 3"=1'-0" — BH –

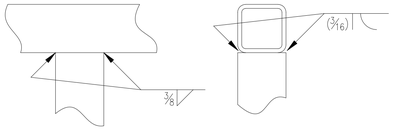

DETAIL SCALE: 3"=1'-0" — BF S-7 (TYPICAL, T-JOINT)

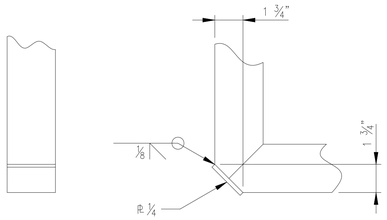

DETAIL SCALE: 3"=1'-0" — AZ S-6

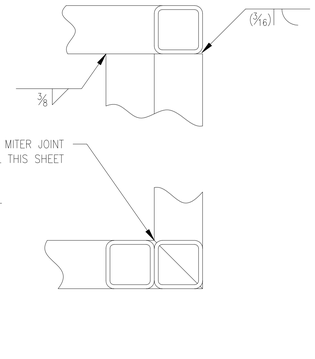

DETAIL SCALE: 3"=1'-0" — BB S-7 (TYPICAL, 2 PLACES)

DETAIL SCALE: 3"=1'-0" — AY S-6

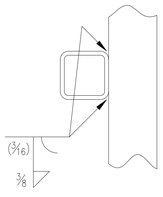

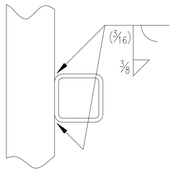

SECTION SCALE: 3"=1'-0" — BC S-7 (TYPICAL)

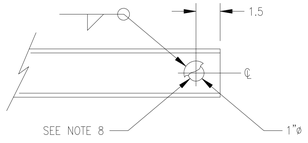

DETAIL SCALE: 3"=1'-0" (TYPICAL PIPE PLUG FLANGE INSTALLATION, SEE NOTE 8) — CP S-7

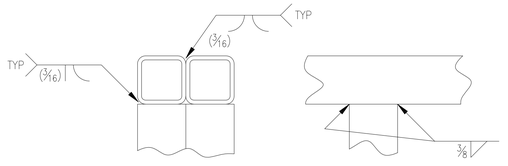

DETAIL SCALE: 3"=1'-0" — BD S-7 (TYPICAL, 2 PLACES)

THIS SHEET IS REFERENCE ONLY COPIED FROM 80K57281

0 3" 6" 9" 12"
SCALE: 3"=1' 0"

SYM	ZONE	DESCRIPTION	DATE	APPROVAL
		REVISIONS		

SIGNATURES	DATE
DRAFTER	
CHECKER	
ENGINEER	
SUBMITTED	
APPROVED	DATE
TITLE	

NATIONAL AERONAUTICS AND SPACE ADMINISTRATION
JOHN F. KENNEDY SPACE CENTER, NASA
KENNEDY SPACE CENTER, FLORIDA

ASSEMBLY DRAWINGS
MPPU REFURBISHMENT DESIGN
ENVIRONMENTAL CONTROL SYSTEM
STRUCTURAL FRAMING

SIZE F | DWG. NO. 584F0301001 | REV –
PROJ. NO. 95255 | SHEET | OF

S-8

FOR ANY PURPOSE OTHER THAN IN CONNECTION WITH A DEFINITELY RELATED GOVERNMENT PROCUREMENT OPERATION, THE UNITED STATES GOVERNMENT THEREBY INCURS NO RESPONSIBILITY NOR ANY OBLIGATION WHATSOEVER; AND THE FACT THAT THE GOVERNMENT MAY HAVE FORMULATED, FURNISHED, OR IN ANY WAY SUPPLIED THE SAID DRAWINGS, SPECIFICATIONS OR ANY OTHER DATA IS NOT TO BE REGARDED BY IMPLICATION OR OTHERWISE IN ANY MANNER LICENSING THE HOLDER OR ANY OTHER PERSONS OR CORPORATION, OR CONVEYING ANY RIGHTS OR PERMISSION TO MANUFACTURE, USE, OR SELL ANY PATENTED INVENTION THAT IN ANY WAY BE RELATED THERETO.

EAR 99 – NO LICENSE REQUIRED

The Information contained in this document is technical in content, but not technical data as defined by the International Traffic in Arms (ITAR) or the Export Administration Regulations (EAR), and therefore is EAR 99 NLR, meaning it is not export regulated, subject to public release. (General Prohibition Six (Embargo) applies to all items subject to the EAR, i.e. items on the CCL and within EAR 99 NLR. You may not make an export or reexport contrary to the provisions of part 746 (Embargos and Other Special Controls) of the EAR and 22 CFR part 126.1 of the ITAR).

EDDR # 113043 : NASA KSC Export Control Office (321- 867-9209)

SPECIFIC NOTES:

A. CONTRACTOR SHALL ACCOMPLISH DETAILED DESIGN OF SECONDARY SUPPORT MEMBERS, SUGGESTED CONFIGURATIONS ARE SHOWN. DESIGN LOADS ARE SHOWN ON SHEET S-12.

B. ALL SECONDARY MEMBER WELDS SHALL BE COMPLETELY SEALED SO THAT NO MOISTURE CAN PENETRATE JOINTS.

C. REF S-10A FOR WHEEL WELL DETAILS.

D. FABRICATOR SHALL VERIFY DIMENSION WITH REFRIGERATION CONTROL CABINET SELECTED & INSURE FITMENT OF EXISTING INLET DUCTING. (REF SPEC 11820, & DWG M-3).

E. SECONDARY STRUCTURE SHALL CLEAR AIR FILTER HOUSING. MATCH DRILL LOUVER SUPPORTS TO LOUVER FRAME.

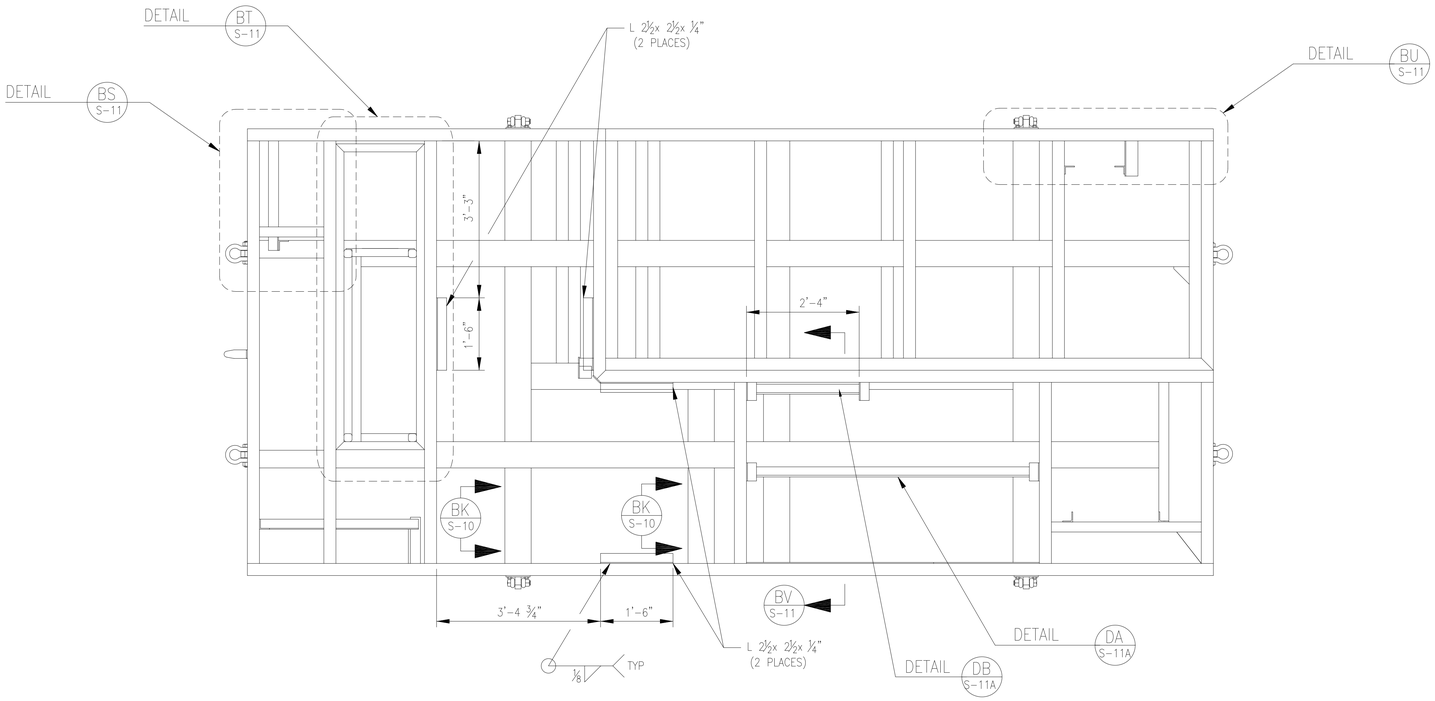

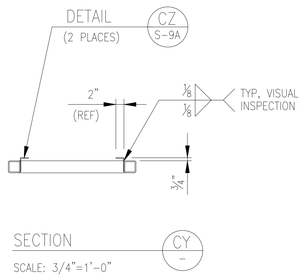

SECTION CY –

SCALE: 3/4"=1'-0"

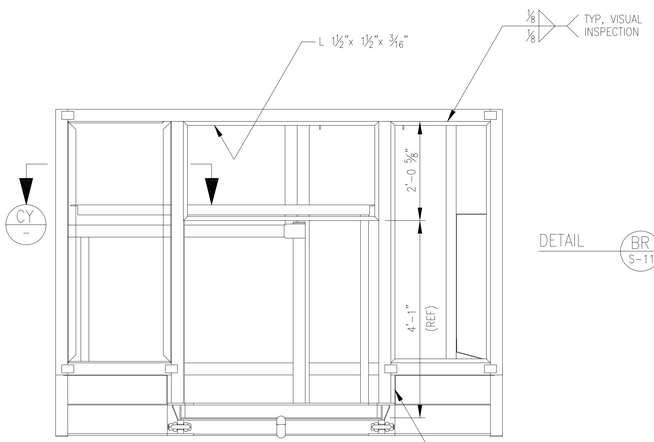

REAR END

NOTCH VERTICAL LEG OF WHEEL WELL BACK, EVEN WITH BACK OF POST. ADD 11 GAGE PLATE BACK OF POST TO WHEEL WELL. SEAL WELD BOTH SIDES.

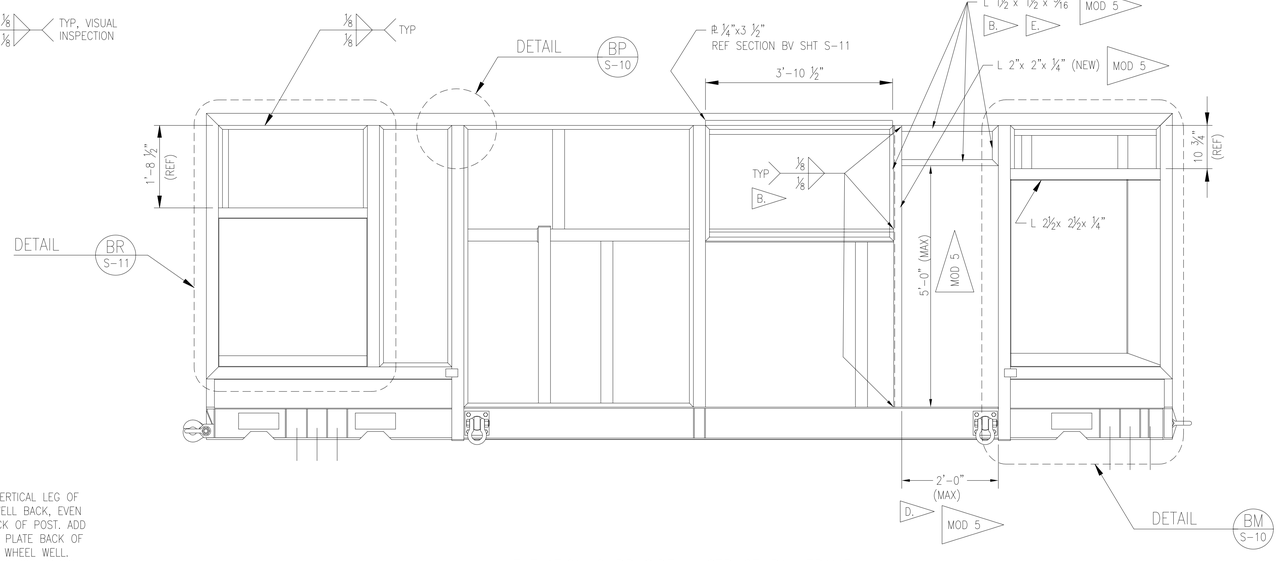

ELEVATION CURB SIDE – STRUCTURAL FRAME

DETAIL BJ S-2 A. B.

SCALE: 3/4"=1'-0"

WITH SECONDARY SUPPORT MEMBERS

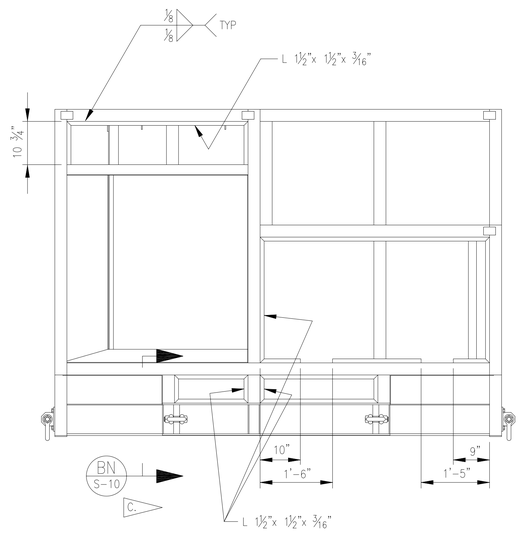

FRONT END

1' 0 1' 2' 3'

SCALE:3/4"=1' 0"

SYM	ZONE	DESCRIPTION	DATE	APPROVAL
		REVISIONS		

SIGNATURES		DATE
DRAFTER	T. JOBE	05/06/11
CHECKER	D. MAY	05/06/11
ENGINEER	A. JACQUES	05/06/11
	R. WITHERSPOON	05/06/11
	R. FRANCO	05/06/11
SUBMITTED	T.O. ADAMS	05/06/11
APPROVED	E.A. THAXTON	05/06/11

NATIONAL AERONAUTICS AND SPACE ADMINISTRATION
JOHN F. KENNEDY SPACE CENTER, NASA
KENNEDY SPACE CENTER, FLORIDA

ASSEMBLY DRAWINGS

MPPU REFURBISHMENT DESIGN ENVIRONMENTAL CONTROL SYSTEM STRUCTURAL FRAMING

SIZE	DWG. NO.	REV
F	584F0301001	—
PROJ. NO. 95255	SHEET	OF

TITLE

S-9

P:\95255\DRAWINGS\STRU\S-9.DWG 21-FEB-2011 13:33 JOBEIL

FOR ANY PURPOSE OTHER THAN IN CONNECTION WITH A DEFINITELY RELATED GOVERNMENT PROCUREMENT OPERATION, THE UNITED STATES GOVERNMENT THEREBY INCURS NO RESPONSIBILITY NOR ANY OBLIGATION WHATSOEVER; AND THE FACT THAT THE GOVERNMENT MAY HAVE FORMULATED, FURNISHED, OR IN ANY WAY SUPPLIED THE SAID DRAWINGS, SPECIFICATIONS OR ANY OTHER DATA IS NOT TO BE REGARDED BY IMPLICATION OR OTHERWISE IN ANY MANNER LICENSING THE HOLDER OR ANY OTHER PERSONS OR CORPORATION, OR CONVEYING ANY RIGHTS OR PERMISSION TO MANUFACTURE, USE, OR SELL ANY PATENTED INVENTION THAT IN ANY WAY BE RELATED THERETO.

EAR 99 – NO LICENSE REQUIRED

The Information contained in this document is technical in content, but not technical data as defined by the International Traffic in Arms (ITAR) or the Export Administration Regulations (EAR), and therefore is EAR 99 NLR, meaning no license required, subjects to public release. (General Prohibition Six (Embargo) applies to all items subject to the EAR, i.e. items on the CCL and within EAR 99 NLR. You may not make an export or reexport contrary to the provisions of part 746 (Embargos and Other Special Controls) of the EAR and 22 CFR part 126.1 of the ITAR).

EDDR # 113043 : NASA KSC Export Control Office (321- 867-9209)

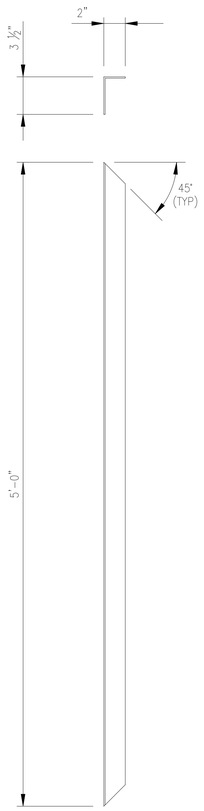

DETAIL CZ
SCALE: 3"=1'-0" S-9

MATERIAL: 11 GAGE STEEL
QUANTITY: 4 PER UNIT
NOTE: TWO TO BE WELDED IN PLACE, AND MITERED PER THIS DETAIL. TWO SHIPPED LOOSE AND LEFT STRAIGHT BOTH LEGS BOTH ENDS. (BOLT IN @ ASSEMBLY)

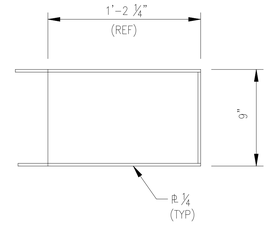

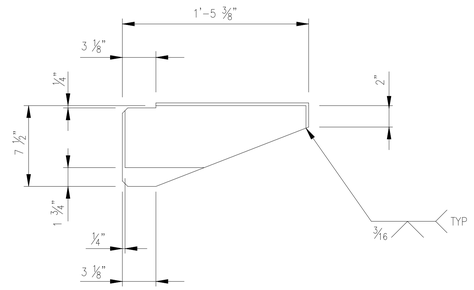

DETAIL CS
SCALE: 3"=1'-0" S-3

THIS SHEET IS REFERENCE ONLY COPIED FROM 80K57281

0 1'
SCALE: 3"=1'-0"

SYM	ZONE	DESCRIPTION	DATE	APPROVAL
REVISIONS				

SIGNATURES	DATE
DRAFTER	
CHECKER	
ENGINEER	
SUBMITTED	
APPROVED	DATE
TITLE	

NATIONAL AERONAUTICS AND SPACE ADMINISTRATION
JOHN F. KENNEDY SPACE CENTER, NASA
KENNEDY SPACE CENTER, FLORIDA

ASSEMBLY DRAWINGS
MPPU REFURBISHMENT DESIGN
ENVIRONMENTAL CONTROL SYSTEM
MISC SHEET METAL DETAILS

SIZE	DWG. NO.	REV
F	584F0301001	—
PROJ. NO. 95255	SHEET	OF

S-9A

P:\95255\DRAWINGS\STRU\S-9A.DWG 26-JAN-2011 09:15 JOBETL

KSC FORM 1-11 (REV. 3/76) (C/G 3/93)

FOR ANY PURPOSE OTHER THAN IN CONNECTION WITH A DEFINITELY RELATED GOVERNMENT PROCUREMENT OPERATION, THE UNITED STATES GOVERNMENT THEREBY INCURS NO RESPONSIBILITY NOR ANY OBLIGATION WHATSOEVER; AND THE FACT THAT THE GOVERNMENT MAY HAVE FORMULATED, FURNISHED, OR IN ANY WAY SUPPLIED THE SAID DRAWINGS, SPECIFICATIONS OR ANY OTHER DATA IS NOT TO BE REGARDED BY IMPLICATION OR OTHERWISE IN ANY MANNER LICENSING THE HOLDER OR ANY OTHER PERSONS OR CORPORATION, OR CONVEYING ANY RIGHTS OR PERMISSION TO MANUFACTURE, USE, OR SELL ANY PATENTED INVENTION THAT IN ANY WAY BE RELATED THERETO.

EAR 99 - NO LICENSE REQUIRED

The information contained in this document is technical in content, but not technical data as defined by the International Traffic in Arms (ITAR) or the Export Administration Regulations (EAR), and therefore is EAR 99 NLR, and may be exported, subject to public release. (General Prohibition Six (Embargo) applies to all items subject to the EAR, i.e. items on the CCL and within EAR 99 NLR. You may not make an export or reexport contrary to the provisions of part 746 (Embargos and Other Special Controls) of the EAR and 22 CFR part 126.1 of the ITAR).

EDDR # 113043 - NASA KSC Export Control Office (321- 867-9209)

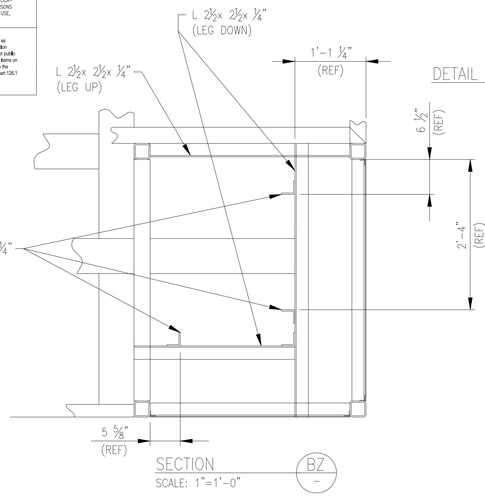

SECTION BZ
SCALE: 1"=1'-0"

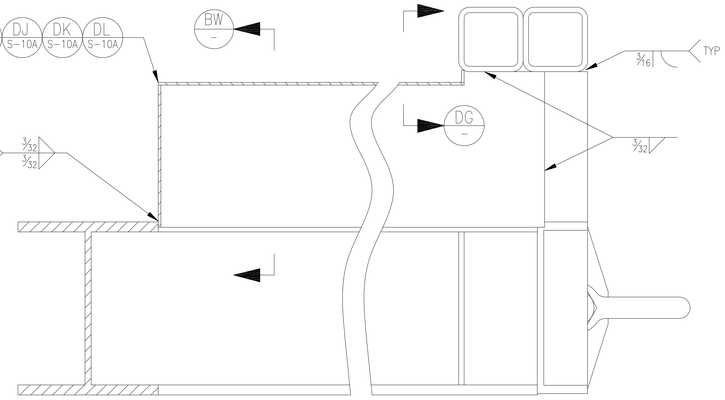

SECTION BN
SCALE: 3"=1'-0"

WHEEL COVERS
(TYP 4 PLACES)

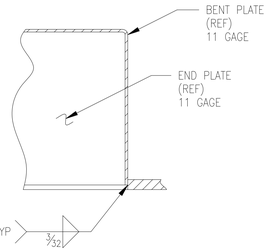

SECTION BW
SCALE: 3"=1'-0"

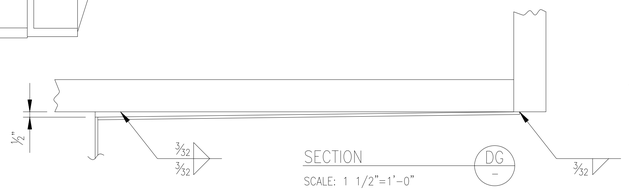

SECTION DG
SCALE: 1 1/2"=1'-0"

SPECIFIC NOTES:

A. ALL WHEEL WELLS TO BE SLOPED 1/8"/FOOT FOR DRAINAGE.

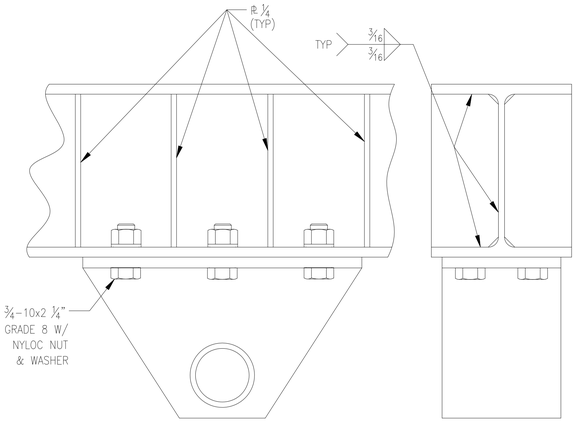

DETAIL BL
SCALE: 3"=1'-0"

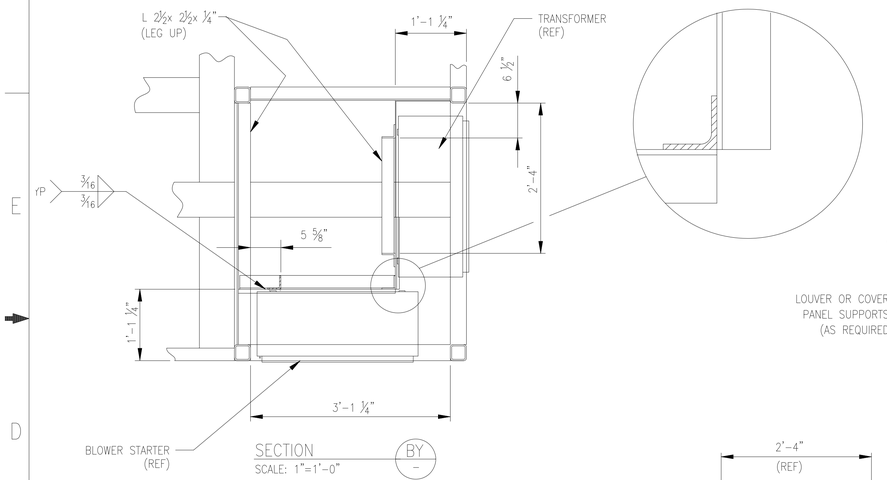

SECTION BY
SCALE: 1"=1'-0"

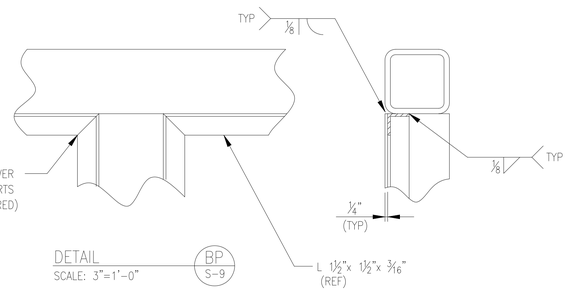

DETAIL BP
SCALE: 3"=1'-0"

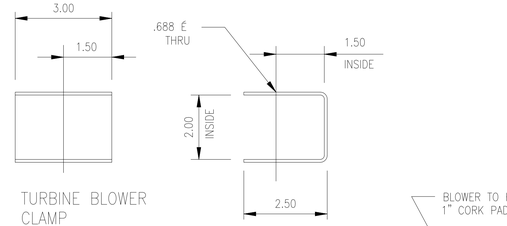

TURBINE BLOWER
CLAMP

DETAIL UY
SCALE: 6"=1'-0"

MATL: 11 GA STEEL

QTY: 4 PER UNIT

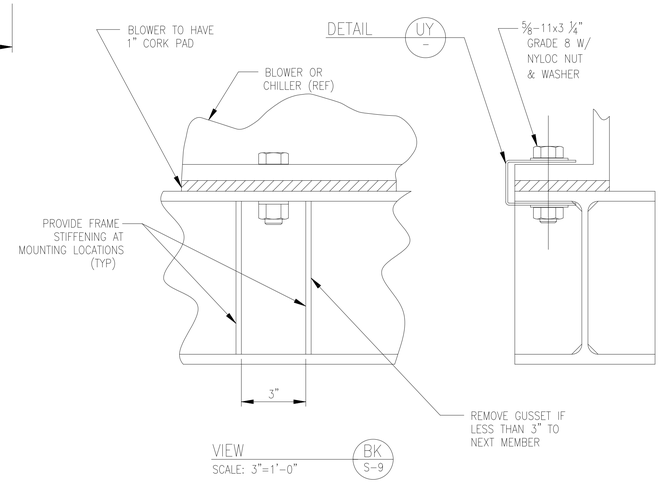

DETAIL UY

VIEW BK
SCALE: 3"=1'-0"

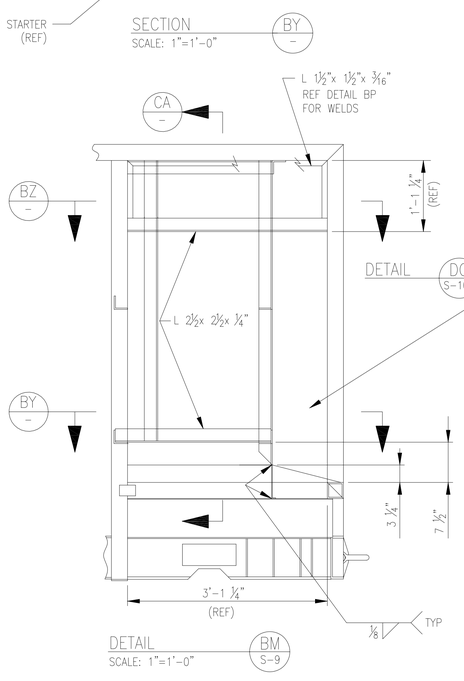

DETAIL BM
SCALE: 1"=1'-0"

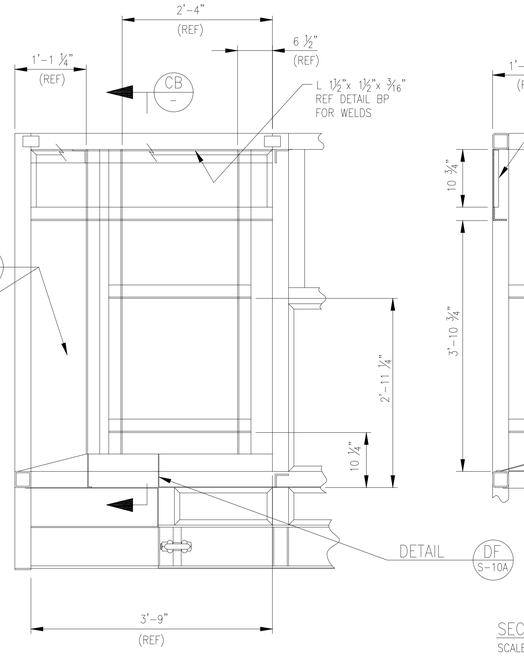

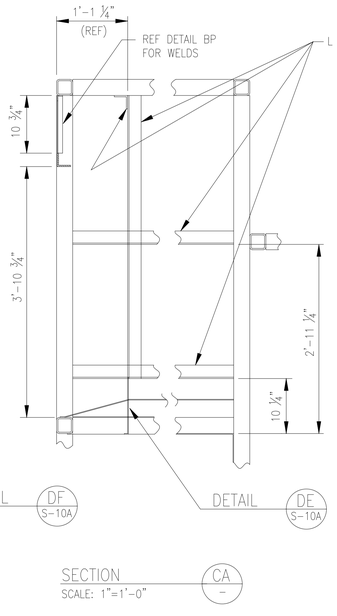

SECTION CA
SCALE: 1"=1'-0"

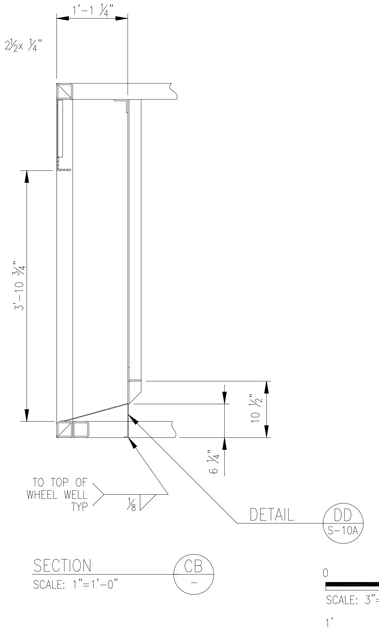

SECTION CB
SCALE: 1"=1'-0"

0 3" 6" 9" 12"
SCALE: 3"=1'-0"

1' 0 1' 2'
SCALE: 1"=1'-0"

THIS SHEET IS REFERENCE ONLY COPIED FROM 80K57281

SYM	ZONE	DESCRIPTION	DATE	APPROVAL

REVISIONS

SIGNATURES	DATE
DRAFTER	
CHECKER	
ENGINEER	
SUBMITTED	
APPROVED	DATE

NATIONAL AERONAUTICS AND SPACE ADMINISTRATION
JOHN F. KENNEDY SPACE CENTER, NASA
KENNEDY SPACE CENTER, FLORIDA

ASSEMBLY DRAWINGS
MPPU REFURBISHMENT DESIGN
ENVIRONMENTAL CONTROL SYSTEM
STRUCTURAL FRAMING

TITLE

SIZE F | DWG. NO. 584F0301001 | REV. –

PROJ. NO. 95255 | SHEET OF

P:\95255\DRAWINGS\STR\S-10.DWG 26-JAN-2011 10:22 JOBETL

S-10

FOR ANY PURPOSE OTHER THAN IN CONNECTION WITH A DEFINITELY RELATED GOVERNMENT PROCUREMENT OPERATION, THE UNITED STATES GOVERNMENT THEREBY INCURS NO RESPONSIBILITY NOR ANY OBLIGATION WHATSOEVER; AND THE FACT THAT THE GOVERNMENT MAY HAVE FORMULATED, FURNISHED, OR IN ANY WAY SUPPLIED THE SAD DRAWINGS, SPECIFICATIONS OR ANY OTHER DATA IS NOT TO BE REGARDED BY IMPLICATION OR OTHERWISE IN ANY MANNER LICENSING THE HOLDER OR ANY OTHER PERSONS OR CORPORATION, OR CONVEYING ANY RIGHTS OR PERMISSION TO MANUFACTURE, USE, OR SELL ANY PATENTED INVENTION THAT IN ANY WAY BE RELATED THERETO.

EAR 99 - NO LICENSE REQUIRED

The information contained in this document is technical in content, but not technical data as defined by the International Traffic in Arms (ITAR) or the Export Administration Regulations (EAR), and therefore is EAR 99 NLR, meaning no license required, suitable for public release. (General Prohibition Six (Embargo) applies to all items subject to the EAR, i.e. items on the CCL and within EAR 99 NLR. You may not make an export or reexport contrary to the provisions of part 746 (Embargos and Other Special Controls) of the EAR and 22 CFR part 126.1 of the ITAR).

EDDR # 113043 : NASA KSC Export Control Office (321- 867-9209)

SPECIFIC NOTES:

A WHEEL WELLS TO HAVE 1/4" PER FOOT SLOPE TOWARD MPPU ℄ FOR WATER DRAINAGE.

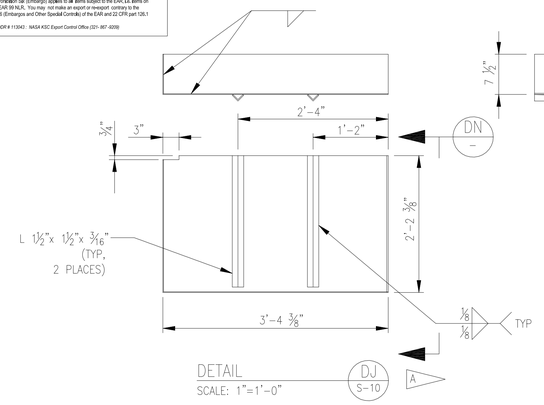

DETAIL DJ S-10 A
SCALE: 1"=1'-0"

WHEEL WELL, ROADSIDE FRONT
MAT'L: 11 GAGE STEEL

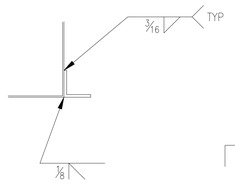

DETAIL DT —
SCALE: 24"=1'-0"

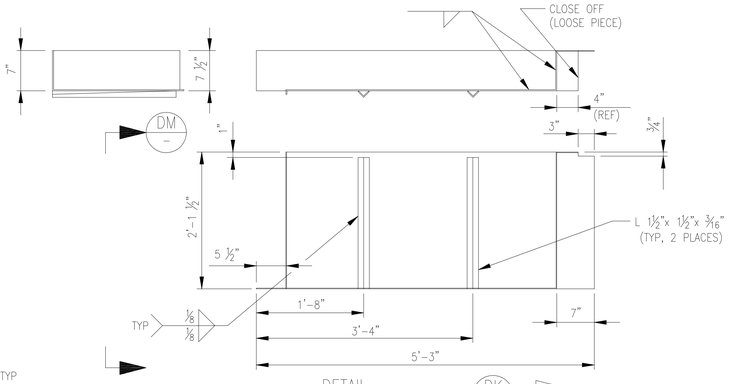

DETAIL DK S-10 A
SCALE: 1"=1'-0"
WHEEL WELL, ROADSIDE REAR
MAT'L: 11 GAGE STEEL

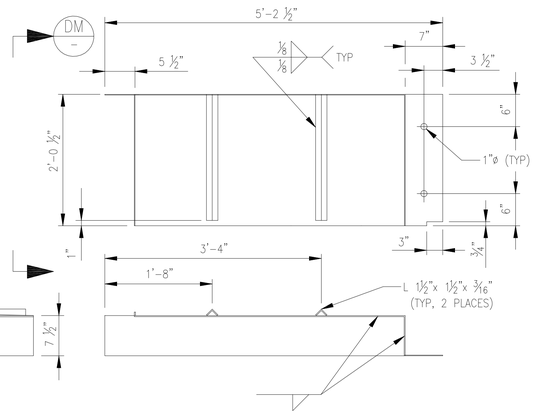

DETAIL DL S-10 A
SCALE: 1"=1'-0"

WHEEL WELL, CURBSIDE REAR
MAT'L: 11 GAGE STEEL

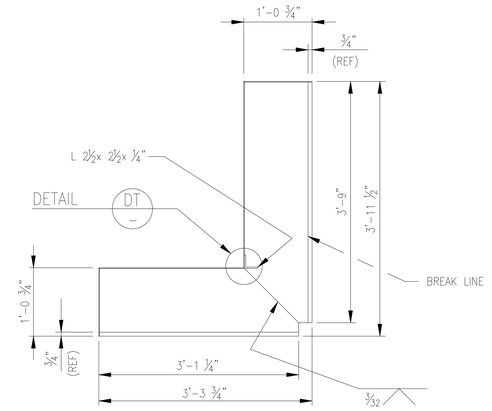

SECTION DP —
SCALE: 1"=1'-0"

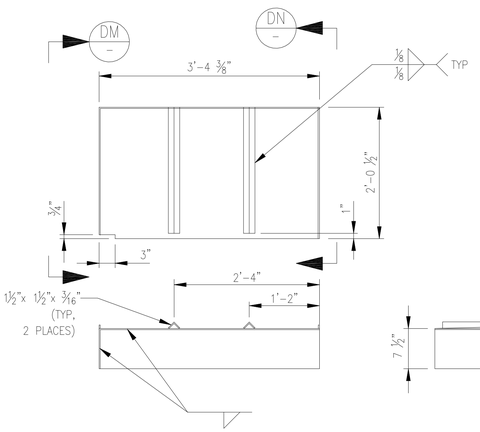

DETAIL DH S-10 A
SCALE: 1"=1'-0"

WHEEL WELL, CURBSIDE FRONT
MAT'L: 11 GAGE STEEL

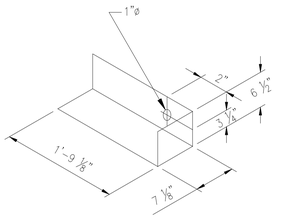

DETAIL DF S-10
SCALE: 1"=1'-0"

CLOSE-OFF BOX, CURBSIDE FRONT
MAT'L: 11 GAGE STEEL

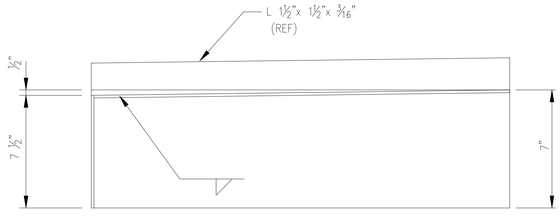

SECTION DM — (SHOWN)
SECTION DN — (OPPOSITE)
SCALE: 1 1/2"=1'-0"

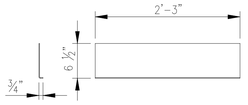

DETAIL DD S-10
SCALE: 1"=1'-0"

CLOSE-OFF, CURBSIDE FRONT
MAT'L: 11 GAGE STEEL

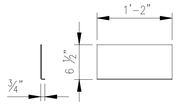

DETAIL DE S-10
SCALE: 1"=1'-0"

CLOSE-OFF, CURBSIDE FRONT
MAT'L: 11 GAGE STEEL

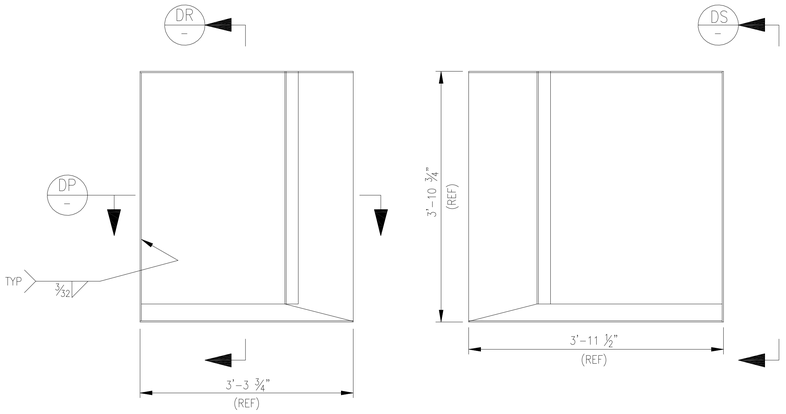

DETAIL DC S-10
SCALE: 1"=1'-0"

MAT'L: 11 GAGE STEEL

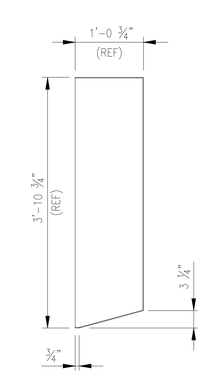

SECTION DR —
SCALE: 1"=1'-0"

NOTE: CONSTRUCT AS A FOUR SIDED BOX.

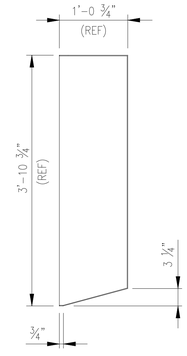

SECTION DS —
SCALE: 1"=1'-0"

NOTE: CONSTRUCT AS A FOUR SIDED BOX.

1' 0 1' 2'
SCALE: 1"=1'-0"

THIS SHEET IS REFERENCE ONLY COPIED FROM 80K57281

SYM	ZONE	DESCRIPTION	DATE	APPROVAL

REVISIONS

SIGNATURES	DATE
DRAFTER	
CHECKER	
ENGINEER	
SUBMITTED	
APPROVED	DATE
TITLE	

NATIONAL AERONAUTICS AND SPACE ADMINISTRATION
JOHN F. KENNEDY SPACE CENTER, NASA
KENNEDY SPACE CENTER, FLORIDA

ASSEMBLY DRAWINGS
MPPU REFURBISHMENT DESIGN
ENVIRONMENTAL CONTROL SYSTEM
MISC SHEET METAL DETAILS

SIZE F | DWG. NO. 584F0301001 | REV —
PROJ. NO. 95255 | SHEET | OF
S-10A
P:\95255\DRAWING2S\STRU\S-10A.DWG 26-JAN-2011 11:23 JOBEIL

FOR ANY PURPOSE OTHER THAN IN CONNECTION WITH A DEFINITELY RELATED GOVERNMENT PROCUREMENT OPERATION, THE UNITED STATES GOVERNMENT THEREBY INCURS NO RESPONSIBILITY NOR ANY OBLIGATION WHATSOEVER; AND THE FACT THAT THE GOVERNMENT MAY HAVE FORMULATED, FURNISHED, OR IN ANY WAY SUPPLIED THE SAID DRAWINGS, SPECIFICATIONS OR ANY OTHER DATA IS NOT TO BE REGARDED BY IMPLICATION OR OTHERWISE IN ANY MANNER LICENSING THE HOLDER OR ANY OTHER PERSONS OR CORPORATION, OR CONVEYING ANY RIGHTS OR PERMISSION TO MANUFACTURE, USE, OR SELL ANY PATENTED INVENTION THAT IN ANY WAY BE RELATED THERETO.

EAR 99 – NO LICENSE REQUIRED

The information contained in this document is technical in content, but not technical data as defined by the International Traffic in Arms (ITAR) or the Export Administration Regulations (EAR), and therefore is EAR 99 NLR. Export license not required, suitable for public release. (General Prohibition Six (Embargo) applies to all items subject to the EAR, i.e. items on the CCL and within EAR 99 NLR. You may not make an export or reexport contrary to the provisions of part 746 (Embargos and Other Special Controls) of the EAR and 22 CFR part 126.1 of the ITAR).

EDDR # 113043 : NASA KSC Export Control Office (321- 867-9209)

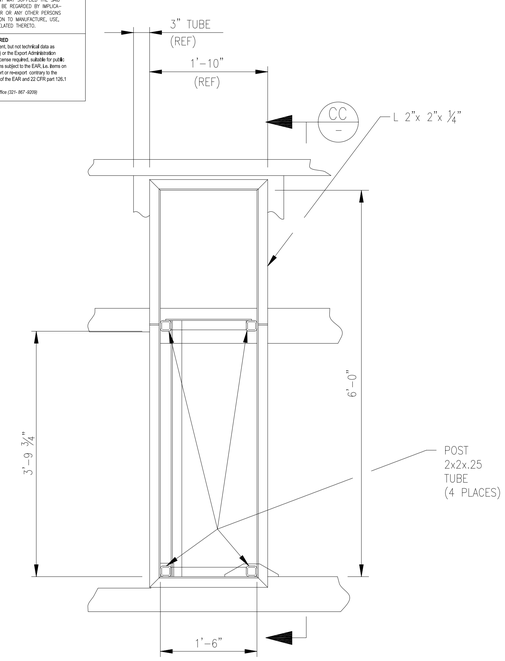

DETAIL BT S-9
SCALE: 1"=1'-0"

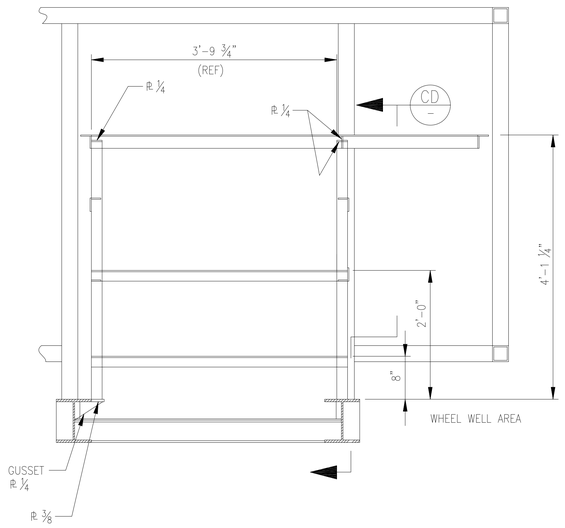

SECTION CC
SCALE: 1"=1'-0"
(ROTATED 90°)

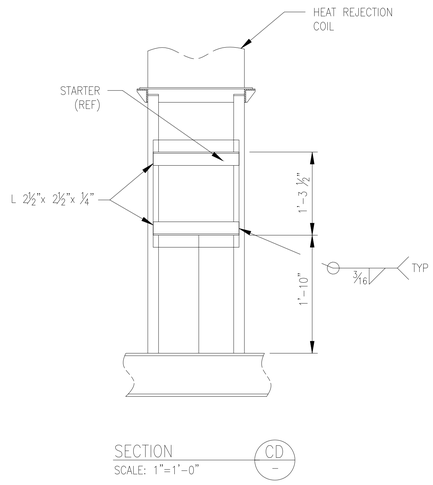

SECTION CD
SCALE: 1"=1'-0"

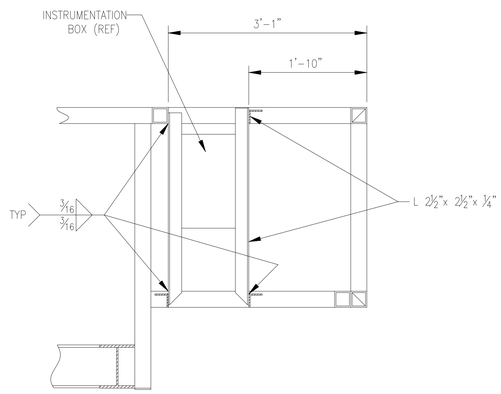

SECTION CM
SCALE: 1"=1'-0"

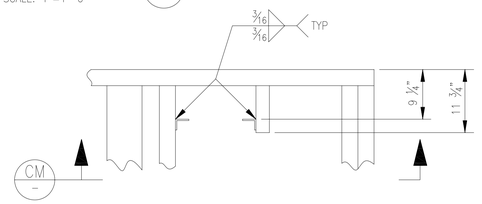

SECTION BU S-9
SCALE: 1"=1'-0"

SECTION CE
SCALE: 1"=1'-0"

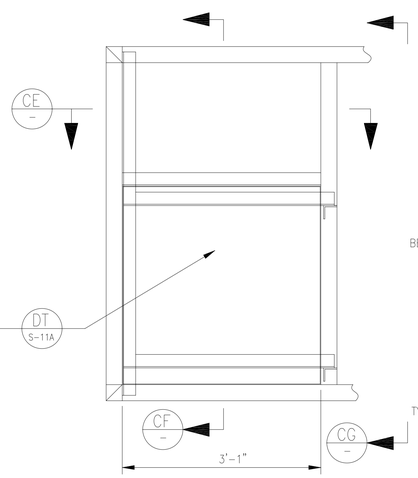

DETAIL BR S-9
SCALE: 1"=1'-0"

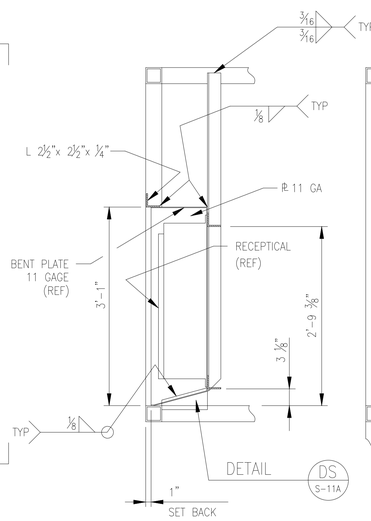

SECTION CF
SCALE: 1"=1'-0"

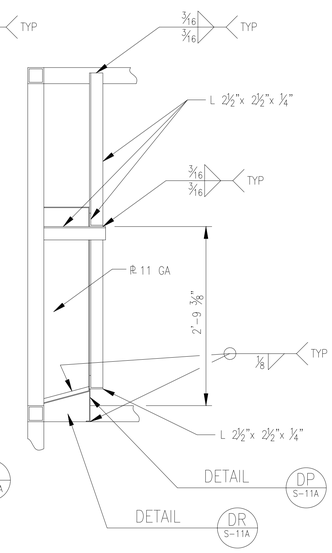

SECTION CG
SCALE: 1"=1'-0"

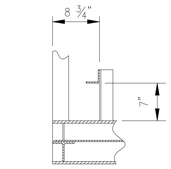

SECTION CH
SCALE: 1"=1'-0"

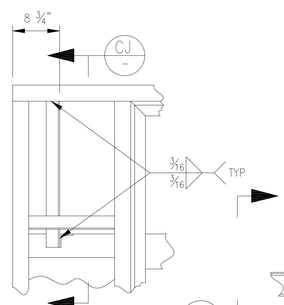

DETAIL BS S-9
SCALE: 1"=1'-0"

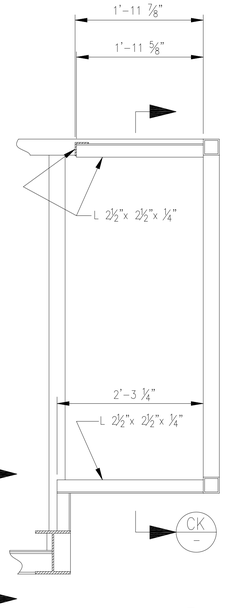

SECTION CJ
SCALE: 1"=1'-0"
(ROTATED 90°)

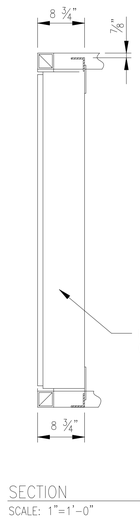

SECTION CK
SCALE: 1"=1'-0"

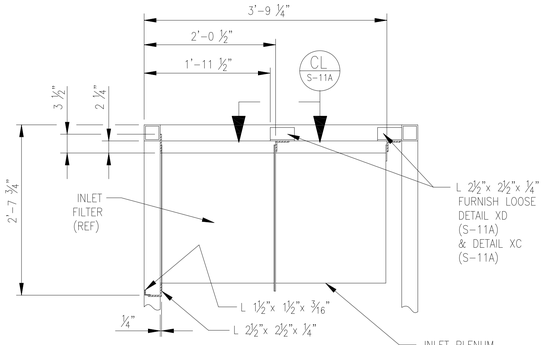

SECTION BV S-9
SCALE: 1"=1'-0"

THIS SHEET IS REFERENCE ONLY
COPIED FORM 80K57281

1' 0 1' 2'
SCALE: 1"=1'-0"

SYM	ZONE	DESCRIPTION	DATE	APPROVAL
REVISIONS				

SIGNATURES	DATE
DRAFTER	
CHECKER	
ENGINEER	
SUBMITTED	
APPROVED	DATE

NATIONAL AERONAUTICS AND SPACE ADMINISTRATION
JOHN F. KENNEDY SPACE CENTER, NASA
KENNEDY SPACE CENTER, FLORIDA

ASSEMBLY DRAWINGS
MPPU REFURBISHMENT DESIGN
ENVIRONMENTAL CONTROL SYSTEM
STRUCTURAL FRAMING

SIZE F | DWG. NO. 584F0301001 | REV —
PROJ. NO. 95255 | SHEET | OF
TITLE S-11
P:\95255\DRAWINGS\STR\S-11.DWG 26-JAN-2011 13:38 JOBETL

FOR ANY PURPOSE OTHER THAN IN CONNECTION WITH A DEFINITELY RELATED GOVERNMENT PROCUREMENT OPERATION, THE UNITED STATES GOVERNMENT THEREBY INCURS NO RESPONSIBILITY NOR ANY OBLIGATION WHATSOEVER; AND THE FACT THAT THE GOVERNMENT MAY HAVE FORMULATED, FURNISHED, OR IN ANY WAY SUPPLIED THE SAID DRAWINGS, SPECIFICATIONS OR ANY OTHER DATA IS NOT TO BE REGARDED BY IMPLICATION OR OTHERWISE IN ANY MANNER LICENSING THE HOLDER OR ANY OTHER PERSONS OR CORPORATION, OR CONVEYING ANY RIGHTS OR PERMISSION TO MANUFACTURE, USE, OR SELL ANY PATENTED INVENTION THAT IN ANY WAY BE RELATED THERETO.

EAR 99 – NO LICENSE REQUIRED

The Information contained in this document is technical in content, but not technical data as defined by the International Traffic in Arms (ITAR) or the Export Administration Regulations (EAR), and therefore is EAR 99 NLR, no export license required, suitable for public release. (General Prohibition Six (Embargo) applies to all items subject to the EAR, i.e. items on the CCL and within EAR 99 NLR. You may not make an export or reexport contrary to the provisions of part 746 (Embargos and Other Special Controls) of the EAR and 22 CFR part 126.1 of the ITAR).

EDDR # 113043 : NASA KSC Export Control Office (321- 867-9209)

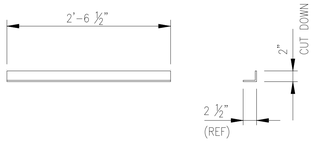

DETAIL DB
SCALE: 1"=1'-0" S-9

MAT'L: L 2-1/2x2-1/2x1/4
STRUCTURAL STEEL

QTY: 1 PER UNIT (FURNISHED LOOSE)

DETAIL DA
SCALE: 1"=1'-0" S-9

MAT'L: L 2-1/2x2-1/2x1/4
STRUCTURAL STEEL

QTY: 1 PER UNIT (FURNISHED LOOSE)

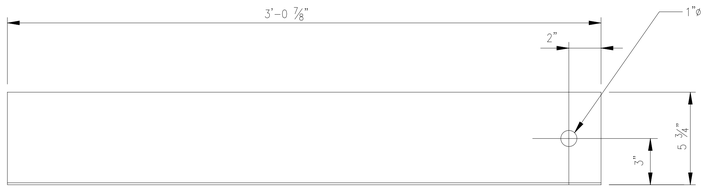

DETAIL DP
SCALE: 3"=1'-0" S-11

MAT'L: 11 GAGE
CRES STEEL

QTY: 1 PER UNIT

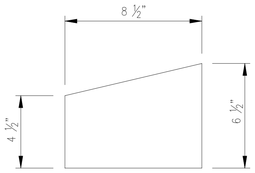

DETAIL DR
SCALE: 3"=1'-0" S-11

MAT'L: 11 GAGE
CRES STEEL

QTY: 1 PER UNIT

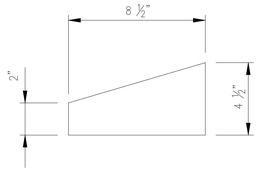

DETAIL DS
SCALE: 3"=1'-0" S-11

MAT'L: 11 GAGE
CRES STEEL

QTY: 1 PER UNIT

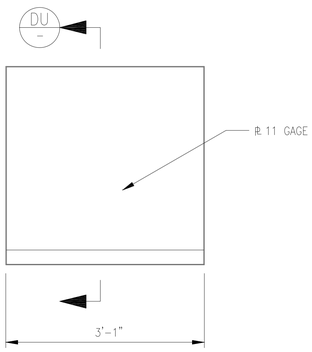

DETAIL DT
SCALE: 1"=1'-0" S-11

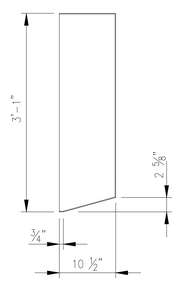

SECTION DU
SCALE: 1"=1'-0" –

NOTE: CONSTRUCT AS A
FOUR SIDED BOX

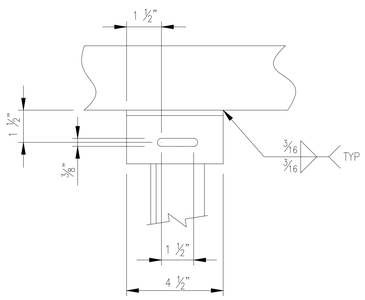

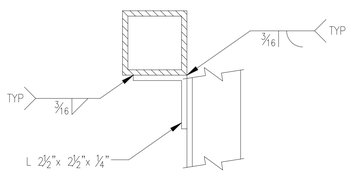

DETAIL CL
SCALE: 3"=1'-0" S-11

QTY: 4 PER UNIT

THIS SHEET IS REFERENCE ONLY COPIED FROM 80K57281

0 1'
SCALE: 3"=1'-0"

1' 0 1' 2'
SCALE: 1"=1' 0"

SYM	ZONE	DESCRIPTION	DATE	APPROVAL
		REVISIONS		

SIGNATURES	DATE
DRAFTER	
CHECKER	
ENGINEER	
SUBMITTED	
APPROVED	DATE
TITLE	

NATIONAL AERONAUTICS AND SPACE ADMINISTRATION
JOHN F. KENNEDY SPACE CENTER, NASA
KENNEDY SPACE CENTER, FLORIDA

ASSEMBLY DRAWINGS

MPPU REFURBISHMENT DESIGN
ENVIRONMENTAL CONTROL SYSTEM
MISC SHEET METAL DETAILS

SIZE	DWG. NO.	REV
F	584F0301001	—
PROJ. NO. 95255	SHEET	OF

S-11A

P:\95255\DRAWINGS\STRU\S-11A.DWG 26-JAN-2011 14:01 JOBETL

KSC FORM 1-11 (REV. 3/76) (C/G 3/93)

FOR ANY PURPOSE OTHER THAN IN CONNECTION WITH A DEFINITELY RELATED GOVERNMENT PROCUREMENT OPERATION, THE UNITED STATES GOVERNMENT THEREBY INCURS NO RESPONSIBILITY NOR ANY OBLIGATION WHATSOEVER; AND THE FACT THAT THE GOVERNMENT MAY HAVE FORMULATED, FURNISHED, OR IN ANY WAY SUPPLIED THE SAID DRAWINGS, SPECIFICATIONS OR ANY OTHER DATA IS NOT TO BE REGARDED BY IMPLICATION OR OTHERWISE IN ANY MANNER LICENSING THE HOLDER OR ANY OTHER PERSONS OR CORPORATION, OR CONVEYING ANY RIGHTS OR PERMISSION TO MANUFACTURE, USE, OR SELL ANY PATENTED INVENTION THAT IN ANY WAY BE RELATED THERETO.

EAR 99 – NO LICENSE REQUIRED

The Information contained in this document is technical in content, but not technical data as defined by the International Traffic in Arms (ITAR) or the Export Administration Regulations (EAR), and therefore is EAR 99 N.L.R. Items of this kind are subject to public release. (General Prohibition Six (Embargo) applies to all items subject to the EAR, i.e. items on the CCL and within EAR 99 N.L.R.. You may not make an export or reexport contrary to the prohibitions of part 746 (Embargos and Other Special Controls) of the EAR and 22 CFR part 126.1 of the ITAR).

EDDR # 113043 : NASA KSC Export Control Office (321- 867-9209)

EAR 99

SPECIFIC NOTES:

A REQUIREMENTS PER MIL-STD-1791, DESIGNING FOR INTERNAL AERIAL DELIVERY IN FIXED WING AIRCRAFT. LOADS APPLIED STATICALLY AND INDEPENDENTLY. MINIMUM SAFETY FACTOR SHALL BE 1.25 TO 1 ON MATERIAL YIELD STRENGTH.

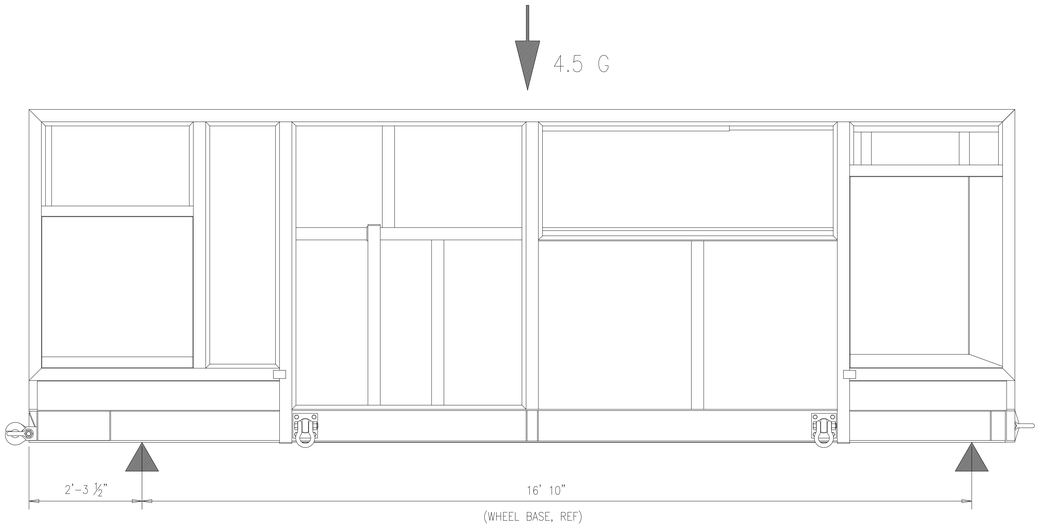

ELEVATION – LOAD CASE 1 (A)
SCALE: NONE

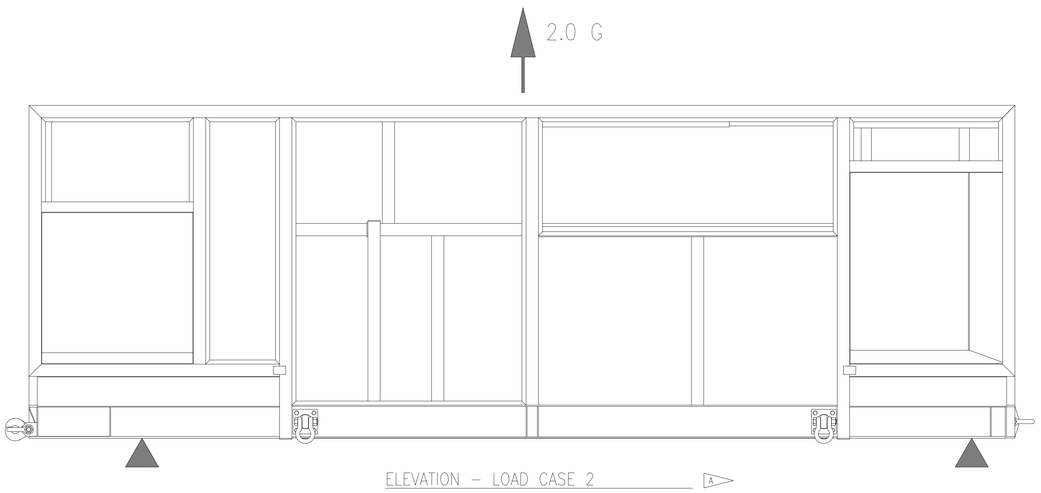

ELEVATION – LOAD CASE 2 (A)
SCALE: NONE

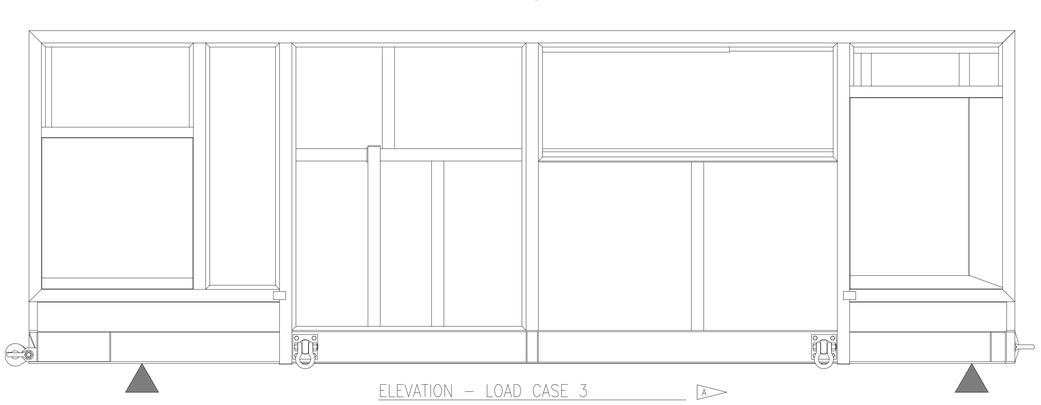

ELEVATION – LOAD CASE 3 (A)
SCALE: NONE

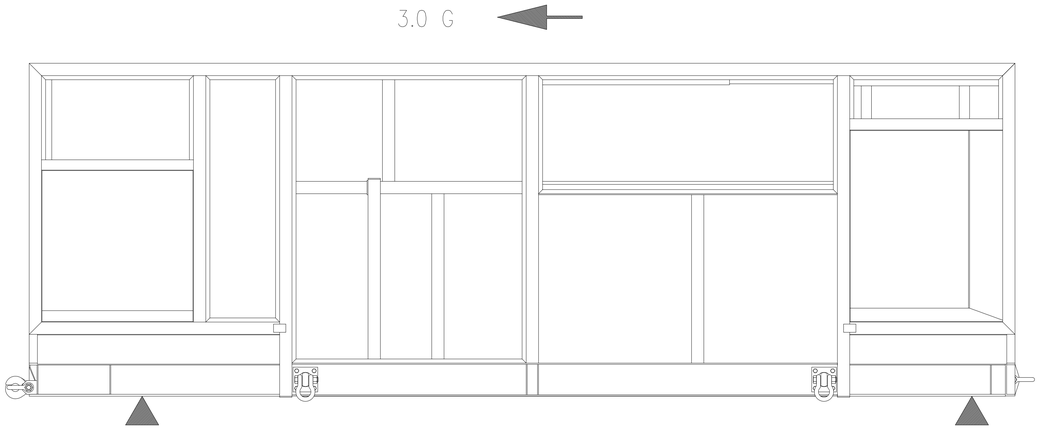

ELEVATION – LOAD CASE 4 (A)
SCALE: NONE

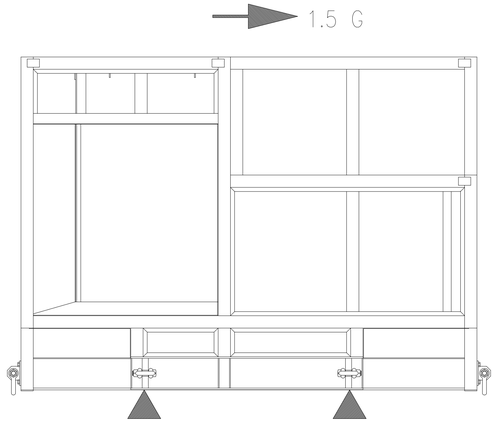

END ELEVATION – LOAD CASE 5 (A)
SCALE: NONE

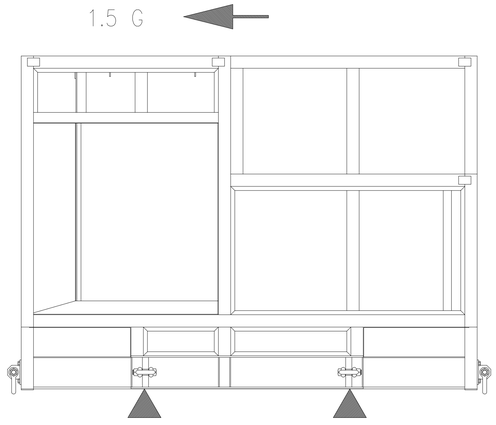

END ELEVATION – LOAD CASE 6 (A)
SCALE: NONE

THIS SHEET IS REFERENCE ONLY COPIED FROM 80K57281

SYM	ZONE	DESCRIPTION	DATE	APPROVAL

REVISIONS

SIGNATURES	DATE
DRAFTER	
CHECKER	
ENGINEER	
SUBMITTED	
APPROVED	DATE
TITLE	

NATIONAL AERONAUTICS AND SPACE ADMINISTRATION
JOHN F. KENNEDY SPACE CENTER, NASA
KENNEDY SPACE CENTER, FLORIDA

ASSEMBLY DRAWINGS

MPPU REFURBISHMENT DESIGN
ENVIRONMENTAL CONTROL SYSTEM
DESIGN LOADS

S-12

SIZE	DWG. NO.	REV
F	584F0301001	–
PROJ. NO. 95255	SHEET	OF

P:\95255\DRAWINGS\STRU\S-12.DWG 26-JAN-2011 14:03 JOBETL

KSC FORM 1-11 (REV. 3/76) (C/G 3/93)

EAR 99

FOR ANY PURPOSE OTHER THAN IN CONNECTION WITH A DEFINITELY RELATED GOVERNMENT PROCUREMENT OPERATION, THE UNITED STATES GOVERNMENT THEREBY INCURS NO RESPONSIBILITY NOR ANY OBLIGATION WHATSOEVER; AND THE FACT THAT THE GOVERNMENT MAY HAVE FORMULATED, FURNISHED, OR IN ANY WAY SUPPLIED THE SAID DRAWINGS, SPECIFICATIONS OR ANY OTHER DATA IS NOT TO BE REGARDED BY IMPLICATION OR OTHERWISE IN ANY MANNER LICENSING THE HOLDER OR ANY OTHER PERSONS OR CORPORATION, OR CONVEYING ANY RIGHTS OR PERMISSION TO MANUFACTURE, USE, OR SELL ANY PATENTED INVENTION THAT IN ANY WAY BE RELATED THERETO.

EAR 99 - NO LICENSE REQUIRED

The information contained in this document is technical in content, but not technical data as defined by the International Traffic in Arms (ITAR) or the Export Administration Regulations (EAR), and therefore is EAR 99 N.L.R. (No license required), suitable for public release. (General Prohibition Six (Embargo) applies to all items subject to the EAR, i.e. items on the CCL and within EAR 99 N.L.R.. You may not make an export or reexport contrary to the provisions of part 746 (Embargos and Other Special Controls) of the EAR and 22 CFR part 126.1 of the ITAR).

EDDR # 113043 : NASA KSC Export Control Office (321- 867-9209)

EAR 99

SPECIFICATIONS:

1. MPPU SPEC: # 11820

PAINT:

1. ALL FACTORY APPLIED COATINGS FOR COMPONENTS SHALL BE ACCEPTABLE.

GENERAL NOTES:

1. THE USE OF A MANUFACTURE'S (CAGE) CODE OR A VENDOR FLAG NOTE IN THE PARTS LIST, IN CONJUNCTION WITH THE PART NUMBER LISTED, IS FOR THE PURPOSE OF IDENTIFYING A KNOWN SOURCE FOR A KNOWN PART/COMPONENT. ALTERNATIVE PARTS/COMPONENTS SHALL BE ACCEPTABLE FOR USE, WHEN SUBMITTED TO AND APPROVED BY KSC ENGINEERING.
2. REMOVE BURRS AND BREAK SHARP EDGES.
3. INSTALL & TORQUE FASTENERS PER MSFC-STD-486 UNLESS OTHERWISE SPECIFIED.
4. ALL "COTS" PARTS TO BE FINISHED PER MANUFACTURERS STD COMMERCIAL FINISH.
5. ALL STRUCTURAL WELDING INSPECTION SHALL BE IN ACCORDANCE WITH NASA-SPEC-5004, CLASS B, EXCEPT WHERE DESIGNATED A OR C IN THE TAIL OF THE WELD SYSTEM.
6. ALL ALUMINUM SHAPES, SHEETS, AND PLATES SHALL CONFORM TO THE ALUMINUM ASSOCIATION SPECIFICATIONS FOR STRUCTURAL ALUMINUM.
7. TUBING AND PIPING RUNS SHALL BE COLOR CODED IN ACCORDANCE WITH ASME A13.1.
8. ALL FASTENERS SHALL BE STAINLESS STEEL CONFORMING TO AMERICAN NATIONAL STANDARDS INSTITUTE SPECIFICATIONS.
9. ALL STAINLESS STEEL SHALL BE ANSI 304 OR 316 SERIES.
10. CARBON STRUCTURAL STEEL SHAPES, PLATES & BARS SHALL BE PER ASTM A36, A500 AND A992.
11. ALUMINUM & ALUMINUM ALLOY SHEET & PLATE SHALL BE PER ASTM B209.
12. ALUMINUM & ALUMINUM ALLOY SEAMLESS EXTRUDED TUBE SHALL BE PER ASTM B241.
13. UNLESS OTHERWISE SPECIFIED ON THE WELD SYMBOL, ALUMINUM WELDING SHALL BE PERFORMED IN ACCORDANCE W/NASA-SPEC-5004 & AWS D.1.2. INSPECTION SHALL BE PER NASA-SPEC-5004, CLASS B (VISUAL & DYE PENETRANT).
14. ALL FASTENERS SHALL BE STAINLESS STEEL, TYPE 304 OR 316 SST. (MOD 102, MOD 108)
15. UNIFIED INCH SCREW THREADS SHALL BE PER ASME B1.1
16. HEX CAP SCREWS SHALL BE PER ASME B18.3 AND ASTM F837, 304 OR 316 SST.
17. CROSS RECESSED PAN HEAD MACHINE SCREWS, TYPE 1 OR 2 , SHALL BE PER ASME B18.6.3; MATERIAL SHALL BE PER ASTM F593, 304 OR 316 SST.
18. HEX SET SCREWS, CUP POINT, SHALL BE PER ASE B18.3; MATERIAL SHALL BE PER ASTM F880 CONDITION CW; 304 OR 316 SST.
19. CROSS RECESSED FLAT COUNTERSUNK HEAD MACHINE SCREW, TYPE 1 OR 2, SHALL BE PER ASME B18.6.3; MATERIAL SHALL BE PER ASTM F593, 304 OR 316 SST.
20. HEX MACHINE SCREW NUTS (LESS THAN ¼") SHALL BE PER ASME B18.6.3 AND ASTM F594, 304 OR 316 SST.
21. HEX NUTS SHALL BE PER ASME B18.2.2 & ASTM F593 , 304 OR 316 SST.
22. FLAT WASHERS SHALL BE PER ASME B18.21.1, TYPE B REGULAR, 304 OR 316 SST.
23. HELICAL SPRING LOCK WASHERS SHALL BE PER ASME B18.2.1 AND AIA/NAS NASM35338, REGULAR SERIES, 304 OR 316 SST.
24. CUSHIONED – SUPPORT, LOOP TYPE CLAMPS SHALL BE PER SAE AS21919.
25. TOUCH UP OF WELDS AND DAMAGED COATINGS SHALL BE ACCOMPLISHED PER THE GUIDELINES IDENTIFIED IN NASA-STD-5008 PARAGRAPHS 4.4.3.8 AND 4.5.8, ALONG WITH TABLE 1, TO MATCH THE ORIGINAL FINISH.
26. WHERE ALUMINUM COMES INTO CONTACT WITH STEEL, STEEL SHALL BE MECHANICALLY CLEANED AND COATED WITH AN EPOXY MASTIC. EPOXY MASTIC WILL SUFFICE AS AN ISOLATION MATERIAL. WHERE A STAINLESS STEEL OR CARBON STEEL FASTENER OR WASHER COMES INTO CONTACT WITH ALUMINUM, CONTACT SURFACES SHALL BE SEPARATED BY A SUITABLE PROTECTIVE MATERIAL SUCH AS VINYL OR TEFLON TAPE.
27. (MOD) ITEMS IN SHEET M-19A SHALL BE IDENTIFIED BY STENCILING AT THE APPROPRIATE PLACE USING RED PAINT AND 1" HIGH CAPITAL LETTERS AND NUMBERS.
28. AFTER ACCEPTANCE BY THE INSPECTION AGENCY REPRESENTATIVE & PRIOR TO SHIPMENT OF THE END ITEM, AFFIX NASA GROUND SUPPORT EQUIPMENT IDENTIFICATION PLATE 75M50393-2 (REFERENCE 75M0393, SHEET 2) TO THE FINISHED ITEM, APPROXIMATELY IN LOCATION OF ORIGINAL PLATE. THE IDENTIFICATION TAG SHALL BE ENGRAVED WITH VERTICAL , .1 INCH SANS SERIF, GOTHIC CHARACTERS, CENTERED BOTH HORIZONTALLY & VERTICALLY. DATA SHALL BE ENTERED IN THE IDENTIFICATION FIELDS AS INDICATED BELOW:

    a. MINI PORTABLE PURGE UNIT
    b. NASA P/N: 584F0301001
    c. MFR P/N: NA
    d. REF DES: NA
    e. ACCEPTANCE DATE:
    f. CONTRACT NO:
    g. WT(LBS):
    h. SERIAL NO: 001, 002, 003, 004
    i. MODEL : -
    j. OFFICE SYMBOL: NE-F2
    k. BY: (CONTRACT NO)

    (MOD)
29. AFTER DATA ENTRY, COVER THE FACE OF THE IDENTIFICATION PLATE WITH ACRYLIC CRYSTAL CLEAR K01303, KRYLON CORP., 101 PROSPECT AVE, CLEVELAND, OH, OR ENGINEERING APPROVED EQUAL.
30. INSTALL THE COMPLETED 75M50393 IDENTIFICATION TAG BY MATCH DRILLING THE IDENTIFICATION TAG TO THE MPPU PANEL. ATTACH USING MACHINE SCREWS AND SUITABLE LOCKNUTS. FULLY COAT THE IDENTIFICATION PLATE WITH SILICONE ADHESIVE SEALANT (CONFORMING TO GROUP 1 OF MIL-A-46146) & PLACE OVER THE MATCH DRILLED HOLES. INSTALL THE FASTENERS SNUG TIGHT SO AS TO ANCHOR PLATE WITHOUT DAMAGE OR DEFORMATION. REMOVE ANY EXCESS ADHESIVE & SEALANT.
31. PHOTO ETCH MARKING & IDENTIFICATION SHALL COMPLY WITH KSC-STD-Z-0005, PARAGRAPH 3.24.2 & THE "GENERAL REQUIREMENTS" OF KSC STD-E-0015 PARAGRAPH 3.1 & SUB PARAGRAPHS.
32. TIGHTEN ALL CIRCULAR FLANGE BOLTS EVENLY PER THE FOLLOWING SEQUENCE:

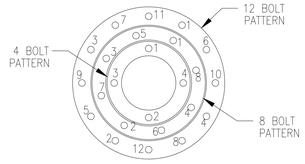

33. COPPER TUBING SHALL CONFORM TO THE MATERIALS AND DIMENSIONS OF ASTM B88 (TYPE K) UNLESS OTHERWISE SPECIFIED.
34. COPPER TUBING FITTINGS SHALL BE IN ACCORDANCE WITH ASME B18.50 UNLESS OTHERWISE SPECIFIED.
35. BRAZED CONNECTIONS SHALL BE IN ACCORDANCE WITH KSC-SPEC-Z-0005A. SOLDER CONNECTIONS SHALL NOT BE USED UNLESS CLEARLY SPECIFIED.
36. THREADED PIPE JOINTS SHALL BE ASSEMBLED WITH TEFLON TAPE APPLIED TO MALE THREADS ONLY. NO TAPE SHALL REACH INTO UNTHREADED AREA OF THE COMPONENT OR FEMALE PIPE FITTING. TEFLON TAPE SHALL BE PER MIL-T-27730. THREAD CONNECTIONS ON REFRIGERATION PIPING SHALL BE SEAL SOLDERED.
37. UNLESS OTHERWISE SPECIFIED ON THE WELD SYMBOL, STAINLESS STEEL WELDING SHALL BE PERFORMED IN ACCORDANCE WITH NASA-SPEC-5004 & AWS D1.6 INSPECTION SHALL BE PER NASA-SPEC-5004, CLASS B (VISUAL & DYE PENETRANT).
38. BONDING AND GROUNDING SHALL CONFORM TO KSC-STD-E-0012.
39. UNLESS DIRECTLY DIMENSIONED, THE LOCATION OF PLUMBING, MECHANICAL EQUIPMENT, PIPING, AND FITTINGS ARE ONLY APPROXIMATE. THE EXACT LOCATION SHALL BE DETERMINED BY THE CONTRACTOR, SUBJECT TO APPROVAL BY THE CONTRACTING OFFICER OR DESIGNATED REPRESENTATIVE.
40. SHOP DRAWINGS FOR ALL WORK, ITEMS, AND EQUIPMENT SHALL BE SUBMITTED TO THE CONTRACTING OFFICER FOR APPROVAL. NO MATERIAL SHALL BE FABRICATED OR DELIVERED TO THE JOB SITE BEFORE APPROVED SHOP DRAWINGS HAVE BEEN RETURNED TO THE CONTRACTOR.
41. DUCTWORK & PIPING SHALL BE SUPPORTED SO AS TO MINIMIZE MOVEMENT AND SAG. SUPPORT ALL DUCTWORK USING TRAPEZE HANGERS, STEEL MEMBERS ATTACHED TO STEEL FRAME, AND PIPE HANGERS WITH THREADED RODS. THREADED RODS, NUTS AND WASHERS SHALL BE STAINLESS STEEL.
42. RESTRAINT CRITERIA: EQUIPMENT IN THEIR INSTALLED CONFIGURATION SHALL BE CAPABLE OF WITHSTANDING THE FOLLOWING FORCES APPLIED STATICALLY AND INDEPENDENTLY.

DIRECTION	LOAD FACTOR
UP	2.0 G
DOWN	4.5 G
FORWARD	3.0 G
AFT	3.0 G
LATERAL	1.5 G

43. AIRSIDE DUCTWORK, TRANSITION PIECES, FILTER PRESSURE HOUSING, HEATING AND, COOLING COILS, SHALL BE DESIGNED FOR AN OPERATING PRESSURE OF 4PSIG. SYSTEM SHALL BE TESTED TO 6PSIG, AND BE LEAK TIGHT AT 4 PSIG.
44. ALL PIPING CONNECTIONS ARE TO USE STANDARD FITTINGS. DRILLED PENETRATIONS ARE NOT ALLOWED.
45. BONDING AND GROUNDING SHALL CONFORM TO KSC-STD-E-0012.
46. ONE MBH IS EQUIVALENT TO 1,000 BTU's PER HOUR.

(MOD 35) SHALL DESIGNATE MOODIFICATIONS TO EXISTING UNITS.

(MOD 26) EXTERIOR PANELS AND LOUVERS TO BE PAINTED WHITE AS PER GENERAL NOTES IN SHEET V-1A.

PARTIAL VENDOR LIST

1. SAGANAW PRODUCTS CORP. 68 WILLIAMS ST. SAGANAW, MI 48601 (517) 753-1411
2. CAMFIL FARR COMPANY P.O. BOX 92187 LOS ANGLES, CA 90009 (800) 333-7320
3. SPENCER TURBINE CO. 206 LANGE DRIVE WASHINGTON, MO 63090 (636) 239-1111
4. AVK INDUSTRIAL PRODUCTS 25323 RYE CANYON ROAD VALENCIA, CA 91355 (805) 257-2329
5. KEYSTONE VALVES & CONTROLS, INC 9600 WEST GULF BANK P.O. BOX 40010 HOUSTON, TX 77240 (713) 937-5477
6. DRS MARLO TECHNOLOGIES 6060 HIGHWAY PP HIGH RIDGE, MO 63049 (636) 677-6600
7. CONTINENTAL PRODUCTS, INC P.O. BOX 421219 INDIANAPOLIS, IN 46242 (317) 241-4748
8. HOFFMAN SPECIALTY 3500 N. SPAULDING AVE. CHICAGO, IL 60618 (312) 267-1600
9. CROWLEY COMPANY P.O. BOX 425 15030 BERKSHIRE IND. PK. BURTON, OH 44021 (440) 834-9400
10. BALDOR ELECTRIC CO. 5711 RS BOREHAM JT ST P.O. BOX 2400 FORT SMITH, AR 72901 (479) 646-4711
11. CLAMPCO PRODUCTS, INC 1743 WALL ROAD WADSWORTH, OH 44281 (800) 947-7890
12. DWYER INSTRUMENTS, INC P.O. BOX 373 102 HIGHWAY 212 MICHIGAN CITY, IN 46361 (219) 879-8000
13. ITT BELL & GOSSETT 8200 N. AUSTIN AVE. MORTON GROVE, IL 60053 (847) 966-3700
14. OGDEN MANUFACTURING CO 103 GAMMA DRIVE PITTSBURG, PA 15238 (412) 967-3906
15. WORCHESTER CONTROLS CORP 5215 N. O'CONNOR BLVD, SUITE 2300 IRVING, TX 75039 (972) 443-6500
16. PARKER HANNIFIN CORP. 300 PARKER DRIVE OTSEGO, MI 49078 (616) 694-9411
17. U S PLASTICS 1390 NEUBRECHT ROAD LIMA, OH 45801 (800) 809-4217
18. HONEYWELL-MICROSWITCH HYCAL SENSING PRODUCTS 9C FOUNDERS BLVD. EL PASO, TX 79906 (972) 470-4451
19. THERMO SENSORS CORP. P.O. BOX 461947 GARLAND, TX 75046 (972) 494-1566
20. PRESO INDUSTRIES 8635 WASHINGTON AVENUE RACINE, WI 53406 (262) 639-6770
21. THE FOXBORO COMPANY 33 COMMERCIAL ST. FOXBORO, MA 02035 (508) 5438750
22. ROYAL ENGINEERED COMPOSITES 1046 E. 9th ST MINDEN, NE 68959 (308) 832-2760
23. CESCO PRODUCTS 9300 73rd AVE. NORTH MINNEAPOLIS, MN 55428 (612) 424-4919
24. MASON INDUSTRIES, INC 350 RABRO DRIVE HAUPPAUGE, NY 11788 (516) 348-0282
25. PETERSON EQUIPMENT CO, INC P.O. BOX 830217 RICHARDSON, TX 75083 (972) 788-4688
26. CONBRACO INDUSTRIES, INC APOLLO VALVE DIVISION P.O. BOX 247 MATTHEWS, NC 28106 (704) 841-6000
27. STANT MANUFACTURING CO 1620 COLUMBIA AVE. CONNERSVILLE, IN 47332 (765) 825-3121
28. UNISTRUT CORP. 35600 CLINTON ST. WAYNE, MI 48184 (800) 521-7730
29. ALFCO DIVISION OF AIR-MAZE CORP 1000 CINDY LANE CARPINTERIA, CA 93013 (805) 684-7651
30. RENFRO FRANKLIN CO. 525 WEST BREAKS STREET ONTARIO, CA 91762 (800) 334-0937
31. SHERWIN WILLIAMS CO. 4717 CLUB VIEW DRIVE FT. WAYNE, IN 46804 (219) 432-4790
32. McMASTER CARR 200 AURORA INDUSTRIAL PKWY AURORA, OH 44202 (330) 995-5500
33. AMERICAN AEROSPACE CONTROLS 570 SMITH STREET FARMINGDALE, NEW YORK 11735 (631)-694-5100
34. AMERICAN AIR FILTER 24828 NETWORK PL CHICAGO, IL 60673 (502)-637-0011
35. NIBCO INC. 1516 MIDDLEBURG ST ELKHART, INDIANA 46516 (574)-295-3000
36. ASHCROFT 250 EAST MAIN STREET STRATFORD, CT 06614 1-800-328-8258
37. CUSTOM AIR COOLERS 2622 SOUTH 21st STREET PHOENIX, AZ 85034 (602) 257-9708
38. EMERSON 1675 WEST CAMPBELL ROAD SIDNEY, OH 45365-0699 (937) 498-3011
39. FLOWSAFE 3865 TAYLOR ROAD ORCHARD PARK, NY 14127 (716) 662-2585
40. FLOWSERVE 5215 N. O'CONNOR BLVD, SUITE 2300 IRVING, TX 75039 (972) 443-6500
41. FOXBORO 5601 GRANITE PARKWAY III SUITE 1000 PLANO, TX 75024 (469) 365-6400
42. MULTIWING P. O. BOX 425 BURTON, OH 44021 (440) 834-9400
43. ROYAL ENGINEERED COMPOSITES 1046 E 9th STREET MINDEN, NE 68959 (308) 832-2760
44. RUSKIN 3900 DR GREAVES RD GRANDVIEW, MO 64030 (816) 761-7476
45. SUPER RADIATOR COILS 104 PEAVY RD CHASKA, MN 55318-2324 (800) 394-2645
46. TAYLOR PRECISION PRODUCTS, INC. 2230 ENTRADA DEL SOL, SUITE A LAS CRUCES, NM 88001 (866) 843-3905
47. TECO 5100 NORTH IH-35 ROUND ROCK, TX 78681 (512) 255-4141
48. TYCO VALVES & CONTROLS 5215 N. O'CONNOR BLVD, SUITE 2300 IRVING, TX 75039 (972) 443-6500
49. VEEDER ROOT CO PO BOX 2003 125 POWDER FOREST DRIVE SIMSBURY, CT 06070 (888) 561-7942
50. VAISALA 10-D GILL STREET WOBURN, MA 01801 (800) 408-9456
51. WATTS 815 CHESTNUT DRIVE NORTH ANDOVER, MA 01845 (978)-688-1811

SYM	ZONE	DESCRIPTION	DATE	APPROVAL
		REVISIONS		

SIGNATURES		DATE
DRAFTER	T. JOBE	05/06/11
CHECKER	D. MAY	05/06/11
ENGINEER	A. JACQUES	05/06/11
	R. WITHERSPOON	05/06/11
	R. FRANCO	05/06/11
SUBMITTED	T.O. ADAMS	05/06/11
APPROVED	E.A. THAXTON	DATE 05/06/11

NATIONAL AERONAUTICS AND SPACE ADMINISTRATION
JOHN F. KENNEDY SPACE CENTER, NASA
KENNEDY SPACE CENTER, FLORIDA

ASSEMBLY DRAWINGS
MPPU REFURBISHMENT DESIGN
ENVIRONMENTAL CONTROL SYSTEM
GENERAL NOTES

TITLE

SIZE F | DWG. NO. 584F0301001 | REV -

PROJ. NO. 95255 | SHEET | OF

M-1

P:\95255\DRAWINGS\MECH\M-1.DWG 02-MAY-2011 13:59 JOBETL

EAR 99

KSC FORM 1-11 (REV. 3/76) (C/G 3/93)

FOR ANY PURPOSE OTHER THAN IN CONNECTION WITH A DEFINITELY RELATED GOVERNMENT PROCUREMENT OPERATION, THE UNITED STATES GOVERNMENT THEREBY INCURS NO RESPONSIBILITY NOR ANY OBLIGATION WHATSOEVER; AND THE FACT THAT THE GOVERNMENT MAY HAVE FORMULATED, FURNISHED, OR IN ANY WAY SUPPLIED THE SAID DRAWINGS, SPECIFICATIONS OR ANY OTHER DATA IS NOT TO BE REGARDED BY IMPLICATION OR OTHERWISE IN ANY MANNER LICENSING THE HOLDER OR ANY OTHER PERSONS OR CORPORATION, OR CONVEYING ANY RIGHTS OR PERMISSION TO MANUFACTURE, USE, OR SELL ANY PATENTED INVENTION THAT IN ANY WAY BE RELATED THERETO.

EAR 99 - NO LICENSE REQUIRED

The information contained in the document is technical in content, but not technical data as defined by the International Traffic in Arms Regulations (ITAR) or the Export Administration Regulations (EAR), and therefore is EAR 99 NLR, no export license required, suitable for public release. [General Prohibition Six (Embargo) applies to all items subject to the EAR, i.e. items on the CCL and within EAR 99 NLR. You may not make an export or re-export contrary to the provisions of part 746 (Embargos and Other Special Controls) of the EAR and 22 CFR part 126.1 of the ITAR].

EDDR # 113043 : NASA KSC Export Control Office (321- 867 -9209)

EAR 99

COMPONENT LIST

ITEM	A NUMBER	SYSTEM LOCATION	PART DESCRIPTION	MANUFACTURER	CAGE CODE	PART NUMBER	COMMENTS	REFURBISHMENT NOTE
1	A194842	CONDENSER FAN	3 BLADES, 27" DIAMETER, 30 DEGREE PITCH, PPG BLADES, 1167 ACFM, 1.15" WG @ 2400 RPM	MULTIWING	51HS7	27/3-9/30/PPG/4ZL	PART OF CONDENSING UNIT, A524801	1
2	A194843	CONDENSER FAN	3 BLADES, 27" DIAMETER, 30 DEGREE PITCH, PPG BLADES, 1167 ACFM, 1.15" WG @ 2400 RPM	MULTIWING	51HS7	27/3-9/30/PPG/4ZL	PART OF CONDENSING UNIT, A524801	1
3	A194844	CONDENSER FAN	3 BLADES, 27" DIAMETER, 30 DEGREE PITCH, PPG BLADES, 1167 ACFM, 1.15" WG @ 2400 RPM	MULTIWING	51HS7	27/3-9/30/PPG/4ZL	PART OF CONDENSING UNIT, A524802	1
4	A194845	CONDENSER FAN	3 BLADES, 27" DIAMETER, 30 DEGREE PITCH, PPG BLADES, 1167 ACFM, 1.15" WG @ 2400 RPM	MULTIWING	51HS7	27/3-9/30/PPG/4ZL	PART OF CONDENSING UNIT, A524802	1
5	A194846	REFRIGERANT TEMPERATURE SENSOR	TEMPERATURE SENSOR, SURFACE TYPE, TYPE 2K	SPORLAN	78462	952662	EVAPORATOR OUTLET	4
6	A194847	REFRIGERANT TEMPERATURE SENSOR	TEMPERATURE SENSOR, SURFACE TYPE, TYPE 2K	SPORLAN	78462	952662	EVAPORATOR OUTLET	4
7	A194848	REFRIGERANT PRESSURE TRANSDUCER	0-500 PSIG PRESSURE TRANSDUCER, 10' CABLE	SPORLAN	78462	952505	EVAPORATOR OUTLET	4
8	A194849	REFRIGERANT PRESSURE TRANSDUCER	0-500 PSIG PRESSURE TRANSDUCER, 10' CABLE	SPORLAN	78462	952505	EVAPORATOR OUTLET	4
9	A194850	REFRIGERANT PRESSURE TRANSDUCER	0-750 PSIG PRESSURE TRANSDUCER, 1/4" MNPT CONNECTION, 4-20 MA OUTPUT, 3' FLYING LEADS	ASHCROFT	38056	G2-7-M02-42-W2-750#-G	CONDENSER EXIT	4
10	A194851	REFRIGERANT PRESSURE TRANSDUCER	0-750 PSIG PRESSURE TRANSDUCER, 1/4" MNPT CONNECTION, 4-20 MA OUTPUT, 3' FLYING LEADS	ASHCROFT	38056	G2-7-M02-42-W2-750#-G	CONDENSER EXIT	4
11	A194852	BLOWER HOURMETER	HOURMETER, RECTANGULAR PANEL MOUNT, SCREW TERMINALS, 120 VAC	VEEDER ROOT CO.	9L952	779536-201		1
12	A194854	FILTER DRIER	FILTER DRIER, REPLACEABLE CORE TYPE, 1 1/8" ODF SOLDER CONNECTIONS,	SPORLAN	78462	C-969-G	CONSUMABLE FILTER ELEMENT	4
13	A194855	FILTER DRIER	FILTER DRIER, REPLACEABLE CORE TYPE, 1 1/8" ODF SOLDER CONNECTIONS,	SPORLAN	78462	C-969-G	CONSUMABLE FILTER ELEMENT	4
14	A194856	LIQUID SIGHT GLASS	SEE-ALL MOISTURE AND LIQUID INDICATOR, 1 1/8" ODF SOLDER CONNECTIONS	SPORLAN	78462	SA-19S		4
15	A194857	LIQUID SIGHT GLASS	SEE-ALL MOISTURE AND LIQUID INDICATOR, 1 1/8" ODF SOLDER CONNECTIONS	SPORLAN	78462	SA-19S		4
16	A194858	AUXILIARY SIDE CONNECTOR	AUXILARY SIDE CONNECTOR, 1 3/8" ODF SOLDER INLET, 1 3/8" ODF SOLDER OUTLET, 7/8" ODF SOLDER SIDE CONNECTION, C SIZE NOZZLE	SPORLAN	78462	ASC-11-7		4
17	A194859	AUXILIARY SIDE CONNECTOR	AUXILARY SIDE CONNECTOR, 1 3/8" ODF SOLDER INLET, 1 3/8" ODF SOLDER OUTLET, 7/8" ODF SOLDER SIDE CONNECTION, C SIZE NOZZLE	SPORLAN	78462	ASC-11-7		4
18	A194862	REFRIGERATION SYSTEM HIGH PRESSURE GAUGE	REFRIGERANT PRESSURE GAUGE, R410A, 800 PSI MAX, STEEL CASE, 1/8" BACK MPT,	ASHCROFT	38056	25W1001TH01BXOR800#		1
19	A194863	REFRIGERATION SYSTEM HIGH PRESSURE GAUGE	REFRIGERANT PRESSURE GAUGE, R410A, 800 PSI MAX, STEEL CASE, 1/8" BACK MPT,	ASHCROFT	38056	25W1001TH01BXOR800#		1
20	A194864	REFRIGERATION SYSTEM TRANSDUCER, HIGH PRESSURE SIDE	0-750 PSIG PRESSURE TRANSDUCER, 4-20 MA OUTPUT, FLYING LEADS	ASHCROFT	38056	G2-7-M02-42-W2-750#-G		1
21	A194865	REFRIGERATION SYSTEM TRANSDUCER, HIGH PRESSURE SIDE	0-750 PSIG PRESSURE TRANSDUCER, 4-20 MA OUTPUT, FLYING LEADS	ASHCROFT	38056	G2-7-M02-42-W2-750#-G		1
22	A194866	REFRIGERATION SYSTEM LOW PRESSURE GAUGE	REFRIGERANT PRESSURE GAUGE, R410A, 800 PSI MAX, STEEL CASE, 1/8" BACK MPT	ASHCROFT	38056	25W1001TH01B800#		1
23	A194867	REFRIGERATION SYSTEM LOW PRESSURE GAUGE	REFRIGERANT PRESSURE GAUGE, R410A, 800 PSI MAX, STEEL CASE, 1/8" BACK MPT	ASHCROFT	38056	25W1001TH01B800#		1
24	A194868	REFRIGERATION SYSTEM LOW PRESSURE TRANSDUCER	0-500 PSIG PRESSURE TRANSDUCER, 4-20 MA OUTPUT, FLYING LEADS	ASHCROFT	38056	G2-7-M02-42-W2-500#-G		1
25	A194869	REFRIGERATION SYSTEM LOW PRESSURE TRANSDUCER	0-500 PSIG PRESSURE TRANSDUCER, 4-20 MA OUTPUT, FLYING LEADS	ASHCROFT	38056	G2-7-M02-42-W2-500#-G		1
26	A194870	REFRIGERATION SYSTEM ISOLATION VALVE	2 5/8" ODS MANUAL ISOLATION BALL VALVE, WITH ACCESS PORT AND FITTINGS, TEFLON SEATS, BRONZE BODY, CV=301	SPORLAN	78462	EBVT-1210		1
27	A194871	REFRIGERATION SYSTEM ISOLATION VALVE	2 5/8" ODS MANUAL ISOLATION BALL VALVE, WITH ACCESS PORT AND FITTINGS, TEFLON SEATS, BRONZE BODY, CV=301	SPORLAN	78462	EBVT-1210		1
28	A194872	REFRIGERANT SAFETY RELIEF VALVE	BRASS RELIEF VALVE, -4 ORIFICE (.065 SQ. IN), MEDIUM BODY, 1/2" INLET, 1" OUTLET	FLOWSAFE	5WDZ0	S854B-05MN0-01FN0-BR-BR-ETS	535 PSIG SET PRESSURE	1
29	A194873	REFRIGERANT SAFETY RELIEF VALVE	BRASS RELIEF VALVE, -4 ORIFICE (.065 SQ. IN), MEDIUM BODY, 1/2" INLET, 1" OUTLET	FLOWSAFE	5WDZ0	S854B-05MN0-01FN0-BR-BR-ETS	535 PSIG SET PRESSURE	1
30	A194874	REFRIGERATION SYSTEM ISOLATION VALVE	1 1/8" ODS MANUAL ISOLATION BALL VALVE, WITH ACCESS PORT AND FITTINGS, TEFLON SEATS, BRONZE BODY	SPORLAN	78462	EBVT-1090		4
31	A194875	REFRIGERATION SYSTEM ISOLATION VALVE	1 1/8" ODS MANUAL ISOLATION BALL VALVE, WITH ACCESS PORT AND FITTINGS, TEFLON SEATS, BRONZE BODY	SPORLAN	78462	EBVT-1090		4
32	A194876	CONDENSATE FLOW SWITCH	FLOW SENSOR, ADJUSTABLE, LOW FLOW TYPE, STAINLESS STEEL CONSTRUCTION, VITON O-RINGS	DWYER INSTRUMENTS INC.	85274	V6SSSLFOMV-VIT		4
33	A194877	CONDENSATE FLOW SWITCH	FLOW SENSOR, ADJUSTABLE, LOW FLOW TYPE, STAINLESS STEEL CONSTRUCTION, VITON O-RINGS	DWYER INSTRUMENTS INC.	85274	V6SSSLFOMV-VIT		4

COMPONENT LIST

ITEM	A NUMBER	SYSTEM LOCATION	PART DESCRIPTION	MANUFACTURER	CAGE CODE	PART NUMBER	COMMENTS	REFURBISHMENT NOTE
34	A194878	OFF COIL TEMPERATURE THERMOCOUPLE (REFRIGERATION)	TEMPERATURE SENSOR ASSEMBLY, 1/4" SHEATH DIAMETER, DUAL TYPE T SENSOR, 304 STAINLESS SHEATH, UNGROUNDED AND INSULATED, 18" PROBE	THERMO SENSORS CO	5K008	42T34-UI-18-SB		4
35	A194879	REHEAT WATER TEMPERATURE THERMOCOUPLE	MGO THERMOCOUPLE, 1/4" SHEATH DIAMETER, DUAL ELEMENT, TYPE T, 316 STAINLESS STEEL SHEATH, UNGROUNDED AND ISOLATED, 1/2" NPT DOUBLE THREADED TO BUSHING, 3.75" PROBE	THERMO SENSORS CO	5K008	42T36-UI-1.375-SB		4
36	A194880	REFRIGERATION SYSTEM CHECK VALVE	1-5/8" ODF REFRIGERANT CHECK VALVE, MAGNETIC ACTION, CV=24.2, .71 PSIG OPENING PRESSURE, 680 PSIG MAX. WORKING PRESSURE.	EMERSON	5L3D4	ACK-26		4
37	A194881	REFRIGERATION SYSTEM CHECK VALVE	1-5/8" ODF REFRIGERANT CHECK VALVE, MAGNETIC ACTION, CV=24.2, .71 PSIG OPENING PRESSURE, 680 PSIG MAX. WORKING PRESSURE.	EMERSON	5L3D4	ACK-26		4
38	A194882	REFRIGERATION SYSTEM PRESSURE RELIEF, LOW SIDE	BRASS RELIEF VALVE, -6 ORIFICE (.149 IN2), MEDIUM BODY, 3/4" INLET, 1" OUTLET	FLOWSAFE	5WDZ0	S858B-34MN0-01FN0-BR-BR-ETS	458 PSIG SET PRESSURE	4
39	A194883	REFRIGERATION SYSTEM PRESSURE RELIEF, LOW SIDE	BRASS RELIEF VALVE, -6 ORIFICE (.149 IN2), MEDIUM BODY, 3/4" INLET, 1" OUTLET	FLOWSAFE	5WDZ0	S858B-34MN0-01FN0-BR-BR-ETS	458 PSIG SET PRESSURE	4
40	A194884	THERMOCOUPLE, HEAT ABSORPTION COIL	TEMPERATURE SENSOR ASSEMBLY, 1/4" SHEATH DIAMETER, DUAL TYPE T SENSOR, 304 STAINLESS SHEATH, UNGROUNDED AND INSULATED, 18" PROBE	THERMO SENSORS CO	5K008	42T34-UI-18-SB		4
41	A194885	HEAT REJECTION FAN	6 BLADES, 14" DIAMETER, ALUMINUM BLADES, 35 DEGREE PITCH, RIGHT HAND ROTATION, 3100 ACFM, 1.41" WG	MULTIWING	51HS7	14/6-6/35/AL/3HL/G .875/AR		1
42	A194886	HEAT REJECTION FAN	6 BLADES, 14" DIAMETER, ALUMINUM BLADES, 35 DEGREE PITCH, RIGHT HAND ROTATION, 3100 ACFM, 1.41" WG	MULTIWING	51HS7	14/6-6/35/AL/3HL/G .875/AR		1
43	A194887	HEAT REJECTION FAN	6 BLADES, 14" DIAMETER, ALUMINUM BLADES, 35 DEGREE PITCH, RIGHT HAND ROTATION, 3100 ACFM, 1.41" WG	MULTIWING	51HS7	14/6-6/35/AL/3HL/G .875/AR		1
44	A194888	FLEX COUPLING, INTAKE	FLEXIBLE DUCT, 14" ID X 7" LG	ROYAL ENGINEERED COMPOSITES	16357	RP97-100-56-28-4		2
45	A194889	HEAT REJECTION SYSTEM, FLOW BALANCING VALVE	ADJUSTABLE PROPORTIONAL BALANCE VALVE, 1 1/2" SIZE, 1 5/8" SWEAT CONNECTIONS, INTEGRATED VALVED READ-OUT PORTS, EXTERNAL KNOB WITH CALIBRATED NAMEPLATE.	BELL AND GOSSET	18189	117403		4
46	A194890	HEAT REJECTION SYSTEM, FLOW CONTROL VALVE	ADJUSTABLE PROPORTIONAL BALANCE VALVE, 1 1/2" SIZE, 1 5/8" SWEAT CONNECTIONS, INTEGRATED VALVED READ-OUT PORTS, EXTERNAL KNOB WITH CALIBRATED NAMEPLATE.	BELL AND GOSSET	18189	117403		4
47	A524749	TEMPERATURE AND HUMIDITY XDUCER	DMT340 SERIES DEW POINT AND TEMPERATURE TRANSMITTERS FOR VERY DRY CONDITIONS, WITH PROBE	VAISALA	8ANW4	DMT344		1
48	A524750	INLET VANE DAMPER	14" INLET VANE DAMPER, COUPLED TO BLOWER ASSEMBLY UNIT	RUSKIN	54BY7	14 IVD		3
49		INLET VANE ACTUATOR	KEYSTONE 1300 IN-LB ELECTRIC ACTUATOR, 110 VAC, 4-20 MODULATING SERVICE AND FEEDBACK	KEYSTONE	46WA3	E013A0W5P10	ADAPTER REQUIRED	1
50	A524751	BLOWER	SPENCER 125 HP, 460VAC OVERHUNG COMPRESSOR DWG NO. B-2787970799	SPENCER TURBINE CO	56213	40125H-MOD		3
51	A524752	HEAT ABSORPTION COIL	COIL 32.5 X 45 X 9 ROWS, 18 FPI, TURBULATORS	SUPER RADIATOR COILS	5Z038	16S03220450-1809AC06003-C02A01G01RL	REF. DRAWING M-9D	1
52	A524753	WRAP AROUND SYSTEM ASSEMBLY		NA		NA		2
53	A524754	EVAPORATOR COIL	32.5 X 45 EVAPORATOR COIL, INCLUDES SPORLAN 1126-12-3/8-40 DISTRIBUTOR WITH 30" EQUAL LENGTH TUBES.	SUPER RADIATOR COILS	5Z038	16F03220450-3612EW0000-C03A02G01QR	REF. DRAWING M-9C	1
54	A524755	CARBON FILTER	CARBON FILTER, 2", DISPOSABLE	CAMFIL FARR	35AL4	RS-80D-201-4	CONSUMABLE 8 PER UNIT	1
55	A524756	HEPA FILTER	HEPA FILTER, 23.38" X 23.38" X 11.5", 99.99% AT 0.3 MICRONS, ALUMINUM CONSTRUCTION, ALUMINUM DOWNSTREAM GASKET	AMERICAN AIR FILTER	0MUF8	42A29A1T2H0	CONSUMABLE 2 PER UNIT	1
56	A524757	EXIT DUMP VALVE	5" KEYSTONE FIGURE AR1, TRIM 723, BUTTERFLY VALVE, CAST IRON WAFER BODY, 316 SS DISC, 316 SS STEM, MOLDED-IN BUNA SEAT	TYCO VALVES & CONTROLS	46AW3	723-703-050-AR1-000		1
57		EXIT DUMP VALVE ACTUATOR	KEYSTONE 1300 IN-LB ELECTRIC ACTUATOR, 110 VAC, 4-20 MODULATING SERVICE AND FEEDBACK	KEYSTONE	46WA3	E013A0W5P10	ADAPTER REQUIRED	1
58	A524758	PRESSURE XDUCER, PLENUM STATIC PRESS	PRESSURE TRANSDUCER, 4-20 MA OUTPUT, 0-200" WG	FOXBORO	23439	1DP10-A22C01F-L2C2		1
59	A524759	DELETED		NA		NA		
60	A524760	REHEAT COIL, OUTLET 1	12"X12" FACE, 5/8" X1.5" STAGGERED TUBES, 12 FPI, FLAT ALUMINUM	SUPER RADIATOR COILS	5Z038	02F01200120-0303AH04000-C04A05G01LL	REF. DRAWING M-9E	1
61	A524761	REHEAT COIL, OUTLET 2	HEATING WATER COIL, 2 ROWS DEEP 8 TUBES HIGH, 30IN FINNED LENGTH, 5/8" OD TUBES, 14 FPI, FLAT FINS, 2.6 SQ FT COIL FACE AREA, 0.5 SERPENTINE, COPPER FINS WITH COPPER TUBES	MARLO		2W8-30-5614F-2.6-H/V-0.50-R/L-B/W	MARLO DRAWING NUMBER 24679B300	3
62	A524762	REHEAT COIL, OUTLET 3	HEATING WATER COIL, 2 ROWS DEEP 8 TUBES HIGH, 12IN FINNED LENGTH, 5/8" OD TUBES, 14 FPI, FLAT FINS, 1 SQ FT COIL FACE AREA, 0.5 SERPENTINE, COPPER FINS WITH COPPER TUBES	MARLO		2W8-12-5614F-1-H/V-0.50-R/L-B/W	MARLO DRAWING NUMBER 24679B100	3
63	A524764	HEAT REJECTION COIL	COOLING WATER COIL, 5/8" COPPER TUBES, 72" X 18.5" FACE AREA, .01" THK COPPER FINS, 11 FINS PER INCH, 6 ROWS DEEP	MARLO		6W12-72-5611F-9.2-V-0.50-R-B	MARLO DRAWING NUMBER 25296B100	3
64	A524765	H20 FLOW CONTROL VALVE, REHEAT WATER BYPASS	1" BALL VALVE, 3 PC. SERIES 44, BRASS BODY, 316SS STEM, POLY FILLED SEAT, TFE COATED BODY SEAL, 1 3/8" COPPER ODF TUBE ENDS	WORCESTER CONTROLS CORP	16609	1-E4416PM-TE		1
65		ACTUATOR, H20 FLOW CONTROL VALVE, REHEAT WATER BYPASS	ELECTRIC ACTUATOR, WORCESTER SERIES 75 ELECTRIC ACTUATOR, WITH 4-20 MA POSITIONER, AND 4-20 MA FEEDBACK	WORCESTER CONTROLS CORP	16609	WOR 10A755Z-120A/DFP1744-120A		1

GENERAL NOTES:

1. SEE SHEET M-1 FOR GENERAL NOTES.

REFURBISHMENT NOTES:

1. REPLACE WITH EQUIVALENT COMPONENT AND/OR UPDATED MODEL NUMBER.

2. RE-USE (SUBJECT TO INSPECTION BY THE CONTRACTOR, PROVIDE RECOMMENDATION FOR REPLACEMENT TO THE CONTRACTING OFFICER OR DESIGNATED REPRESENTATIVE, DO NOT REPLACE ANY COMPONENT WITHOUT APPROVAL FROM THE CONTRACTING OFFICER OR DESIGNATED REPRESENTATIVE).

3. REFURBISH.

4. NEW SCOPE.

SYM	ZONE	DESCRIPTION	DATE	APPROVAL

REVISIONS

SIGNATURES		DATE
DRAFTER	T. JOBE	05/06/11
CHECKER	D. MAY	05/06/11
ENGINEER	A. JACQUES	05/06/11
	R. WITHERSPOON	05/06/11
	R. FRANCO	05/06/11
SUBMITTED	T.O. ADAMS	05/06/11
APPROVED	E.A. THAXTON	05/06/11

NATIONAL AERONAUTICS AND SPACE ADMINISTRATION
JOHN F. KENNEDY SPACE CENTER, NASA
KENNEDY SPACE CENTER, FLORIDA

ASSEMBLY DRAWINGS

MPPU REFURBISHMENT DESIGN
ENVIRONMENTAL CONTROL SYSTEM
''A'' NUMBER COMPONENT LIST

SIZE F | DWG. NO. 584F0301001 | REV —

TITLE

PROJ. NO. 95255 | SHEET OF

M-1A

FOR ANY PURPOSE OTHER THAN IN CONNECTION WITH A DEFINITELY RELATED GOVERNMENT PROCUREMENT OPERATION, THE UNITED STATES GOVERNMENT THEREBY INCURS NO RESPONSIBILITY NOR ANY OBLIGATION WHATSOEVER; AND THE FACT THAT THE GOVERNMENT MAY HAVE FORMULATED, FURNISHED, OR IN ANY WAY SUPPLIED THE SAID DRAWINGS, SPECIFICATIONS OR ANY OTHER DATA IS NOT TO BE REGARDED BY IMPLICATION OR OTHERWISE IN ANY MANNER LICENSING THE HOLDER OR ANY OTHER PERSONS OR CORPORATION, OR CONVEYING ANY RIGHTS OR PERMISSION TO MANUFACTURE, USE, OR SELL ANY PATENTED INVENTION THAT IN ANY WAY BE RELATED THERETO.

EAR 99 – NO LICENSE REQUIRED

The information contained in this document is technical in content, but not technical data as defined by the International Traffic in Arms (ITAR) or the Export Administration Regulations (EAR), and therefore is EAR 99 N.L.R. items of items required, suitable for public release. (General Prohibition Six (Embargo) applies to all items subject to the EAR, i.e. items on the CCL and within EAR 99 N.L.R., You may not make an export or reexport contrary to the provisions of part 746 (Embargos and Other Special Controls) of the EAR and 22 CFR part 126.1 of the ITAR).

EDDR # 113043 : NASA KSC Export Control Office (321- 867-9209)

EAR 99

GENERAL NOTES:

1. SEE SHEET M-1 FOR GENERAL NOTES.

REFURBISHMENT NOTES:

1. REPLACE WITH EQUIVALENT COMPONENT AND/OR UPDATED MODEL NUMBER.

2. RE-USE (SUBJECT TO INSPECTION BY THE CONTRACTOR, PROVIDE RECOMMENDATION FOR REPLACEMENT TO THE CONTRACTING OFFICER OR DESIGNATED REPRESENTATIVE, DO NOT REPLACE ANY COMPONENT WITHOUT APPROVAL FROM THE CONTRACTING OFFICER OR DESIGNATED REPRESENTATIVE).

3. REFURBISH.

4. NEW SCOPE.

COMPONENT LIST

ITEM	A NUMBER	SYSTEM LOCATION	PART DESCRIPTION	MANUFACTURER	CAGE CODE	PART NUMBER	COMMENTS	REFURBISHMENT NOTE
66	A524766	H2O FLOW CONTROL VALVE, OUTLET 1 REHEAT	3/4" BALL VALVE, 3 PC. SERIES 44, BRASS BODY, 316SS STEM, POLY FILLED SEAT, TFE COATED BODY SEAL, COPPER ODS TUBE ENDS.	WORCESTER CONTROLS CORP	16609	3/4-E4416-PMTE		1
67		ACTUATOR, H2O FLOW CONTROL VALVE, OUTLET 1	ELECTRIC ACTUATOR, WORCESTER SERIES 75 ELECTRIC ACTUATOR, WITH 4-20 MA POSITIONER, AND 4-20 MA FEEDBACK	WORCESTER CONTROLS CORP	16609	WOR 10755Z-120A/DFP1744-120A		1
68	A524767	H2O FLOW CONTROL VALVE, OUTLET 2 H2O REHEAT	3/4" BALL VALVE, 3 PC. SERIES 44, BRASS BODY, 316SS STEM, POLY FILLED SEAT, TFE COATED BODY SEAL, COPPER ODS TUBE ENDS.	WORCESTER CONTROLS CORP	16609	3/4-E4416-PMTE		1
69		ACTUATOR, H2O FLOW CONTROL VALVE, OUTLET 2	ELECTRIC ACTUATOR, WORCESTER SERIES 75 ELECTRIC ACTUATOR, WITH 4-20 MA POSITIONER, AND 4-20 MA FEEDBACK	WORCESTER CONTROLS CORP	16609	WOR 10A755Z-120A/DFP1744-120A		1
70	A524768	H2O FLOW CONTROL VALVE, OUTLET 3 REHEAT	3/4" BALL VALVE, 3 PC. SERIES 44, BRASS BODY, 316SS STEM, POLY FILLED SEAT, TFE COATED BODY SEAL, COPPER ODS TUBE ENDS.	WORCESTER CONTROLS CORP	16609	3/4-E4416-PMTE		1
71		ACTUATOR, H2O FLOW CONTROL VALVE, OUTLET 3	ELECTRIC ACTUATOR, WORCESTER SERIES 75 ELECTRIC ACTUATOR, WITH 4-20 MA POSITIONER, AND 4-20 MA FEEDBACK	WORCESTER CONTROLS CORP	16609	WOR 10A755Z-120A/DFP1744-120A		1
72	A524769	TOTAL PRESS XDUCER, OUTLET 1 VENTURI	PRESSURE TRANSDUCER, 4-20 MA OUTPUT, 0-200" WG	FOXBORO	23439	1DP10-A22C01F-L2C2		1
73	A524770	TOTAL PRESSURE XDUCER, OUTLET 2 VENTURI	PRESSURE TRANSDUCER, 4-20 MA OUTPUT, 0-200" WG	FOXBORO	23439	1DP10-A22C01F-L2C2		1
74	A524771	TOTAL PRESSURE XDUCER, OUTLET 3 VENTURI	PRESSURE TRANSDUCER, 4-20 MA OUTPUT, 0-200" WG	FOXBORO	23439	1DP10-A22C01F-L2C2		1
75	A524772	STATIC PRESS XDUCER, OUTLET 1 VENTURI	PRESSURE TRANSDUCER, CALIBRATE 0-18" WG, 4-20 MA OUTPUT	FOXBORO	23439	1DP10-A22B01F-L2C2		1
76	A524773	STATIC PRESS XDUCER, OUTLET 2 VENTURI	PRESSURE TRANSDUCER, CALIBRATE 0-18" WG, 4-20 MA OUTPUT	FOXBORO	23439	1DP10-A22B01F-L2C2		1
77	A524774	STATIC PRESS XDUCER, OUTLET 3 VENTURI	PRESSURE TRANSDUCER, CALIBRATE 0-18" WG, 4-20 MA OUTPUT	FOXBORO	23439	1DP10-A22B01F-L2C2		1
78	A524775	PITOT TUBE, OUTLET 1	5" DIA SCH 5 PIPE, FLOW RATE, 85 LBS/MIN	PRESO		AYR-005-B-1		2
79	A524776	PITOT TUBE, OUTLET 2	6" DIA SCH 5 PIPE, FLOW RATE, 100 LBS/MIN	PRESO		AYR-006-B-1		2
80	A524777	PITOT TUBE, OUTLET 3	5" DIA SCH 5 PIPE, FLOW RATE, 72 LBS/MIN	PRESO		AYR-005-B-1		2
81	A524778	TEMPERATURE THERMOCOUPLE, OUTLET 1	1/4" SHEATH DIAMETER, DUAL TYPE T, 304 STAINLESS STEEL SHEATH, 4.25" PROBE LENGTH, UNGROUNDED AND INSULATED, 1/2" NPT THREADS (2X)	THERMO SENSORS CO	5K008	42T34-UI-4.25-SB		1
82	A524779	TEMPERATURE THERMOCOUPLE, OUTLET 2	1/4" SHEATH DIAMETER, DUAL TYPE T, 304 STAINLESS STEEL SHEATH, 5" PROBE LENGTH, UNGROUNDED AND INSULATED, 1/2" NPT THREADS (2X)	THERMO SENSORS CO	5K008	42T34-UI-5-SB		1
83	A524780	TEMPERATURE THERMOCOUPLE, OUTLET 3	1/4" SHEATH DIAMETER, DUAL TYPE T, 304 STAINLESS STEEL SHEATH, 4.25" PROBE LENGTH, UNGROUNDED AND INSULATED, 1/2"NPT THREADS (2X)	THERMO SENSORS CO	5K008	42T34-UI-4.25-SB		1
84	A524781	AIR FLOW CONTROL VALVE, OUTLET 1	4" KEYSTONE FIGURE AR1, TRIM 723, BUTTERFLY VALVE, CAST IRON WAFER BODY, 316 SS DISC, 316 SS STEM, MOLDED-IN BUNA SEAT	TYCO VALVES & CONTROLS	46AW3	723-703-040-AR1-000		1
85		ACTUATOR, FLOW CONTROL VALVE, OUTLET 1	KEYSTONE 1300 IN-LB ELECTRIC ACTUATOR, 110 VAC, 4-20 MODULATING SERVICE AND FEEDBACK	KEYSTONE	46WA3	E013A0W5P10	ADAPTER REQUIRED	1
86	A524782	AIR FLOW CONTROL VALVE, OUTLET 2	5" KEYSTONE FIGURE AR1, TRIM 723, BUTTERFLY VALVE, CAST IRON WAFER BODY, 316 SS DISC, 316 SS STEM, MOLDED-IN BUNA SEAT	TYCO VALVES & CONTROLS	46AW3	723-703-050-AR1-000		1
87		ACTUATOR, FLOW CONTROL VALVE, OUTLET 2	KEYSTONE 1300 IN-LB ELECTRIC ACTUATOR, 110 VAC, 4-20 MODULATING SERVICE AND FEEDBACK	KEYSTONE	46WA3	E013A0W5P10	ADAPTER REQUIRED	1
88	A524783	AIR FLOW CONTROL VALVE, OUTLET 3	4" KEYSTONE FIGURE AR1, TRIM 723, BUTTERFLY VALVE, CAST IRON WAFER BODY, 316 SS DISC, 316 SS STEM, MOLDED-IN BUNA SEAT	TYCO VALVES & CONTROLS	46AW3	723-703-040-AR1-000		1
89		ACTUATOR, FLOW CONTROL VALVE, OUTLET 3	KEYSTONE 1300 IN-LB ELECTRIC ACTUATOR, 110 VAC, 4-20 MODULATING SERVICE AND FEEDBACK	KEYSTONE	46WA3	E013A0W5P10	ADAPTER REQUIRED	1
90	A524784	PRESSURE XDUCER, OUTLET 1	PRESSURE TRANSDUCER, 4-20 MA OUTPUT, 0-83" WG	FOXBORO	23439	1DP10-A22B01F-L2C2		1
91	A524785	PRESSURE XDUCER, OUTLET 2	PRESSURE TRANSDUCER, 4-20 MA OUTPUT, 0-83" WG	FOXBORO	23439	1DP10-A22B01F-L2C2		1
92	A524786	PRESSURE XDUCER, OUTLET 3	PRESSURE TRANSDUCER, 4-20 MA OUTPUT, 0-83" WG	FOXBORO	23439	1DP10-A22B01F-L2C2		1
93	A524787	PRESSURE GAUGE, OUTLET 1	DIFFERENTIAL PRESSURE GAGE, 0-150" WG, SERIES 2000	DWYER INSTRUMENTS INC.	85274	2150		1
94	A524788	PRESSURE GAUGE, OUTLET 2	DIFFERENTIAL PRESSURE GAGE, 0-150" WG, SERIES 2000	DWYER INSTRUMENTS INC.	85274	2150		1
95	A524789	PRESSURE GAUGE, OUTLET 3	DIFFERENTIAL PRESSURE GAGE, 0-150" WG, SERIES 2000	DWYER INSTRUMENTS INC.	85274	2150		1
96	A524790	REHEAT CIRCUIT DIFFERENTIAL PRESSURE XDUCER	PRESSURE TRANSDUCER, 4-20 MA OUTPUT, 0-200" WG	FOXBORO	23439	1DP10-A22C01F-L2C2		1
97	A524791	FAN MOTOR, HEAT REJECTION COIL	EXTENDED SHAFT MOTOR, 2HP, 3450 RPM, 3PH 60HZ, 145TZ, TEAO	BALDOR ELECTRIC	3R519	35N871-5603G1		1
98	A524792	FAN MOTOR, HEAT REJECTION COIL	EXTENDED SHAFT MOTOR, 2HP, 3450 RPM, 3PH 60HZ, 145TZ, TEAO	BALDOR ELECTRIC	3R519	35N871-5603G1		1
99	A524793	FAN MOTOR, HEAT REJECTION COIL	EXTENDED SHAFT MOTOR, 2HP, 3450 RPM, 3PH 60HZ, 145TZ, TEAO	BALDOR ELECTRIC	3R519	35N871-5603G1		1

COMPONENT LIST

ITEM	A NUMBER	SYSTEM LOCATION	PART DESCRIPTION	MANUFACTURER	CAGE CODE	PART NUMBER	COMMENTS	REFURBISHMENT NOTE
100	A524794	FILTER/STRAINER, REHEAT WATER	1.5" WYE TYPE STRAINER, SOLDER ENDS, BRONZE BODY, 304 STAINLESS STEEL SCREEN, PATTERN #20	WATTS	79227	S777-1.5"		1
101	A524795	PUMP, REHEAT CIRCULATION	1/3 HP,110 VAC, 60HZ, 1 PH, ALL BRONZE CONSTRUCTION, 4.84" IMPELLER DIAMETER, 13.75 GPM AT 28 FT HEAD.	BELL AND GOSSET	18189	172710LF		1
102	A524796	HEATER, WATER	HEATER, WATER CIRCULATION, 40KW 480V 3PH, NEMA 4X HOUSING WITH THERMOSTAT	OGDEN MANUFACTURING INC	65586	CK5A-0284M7 MOD		1
103	A524797	HEATER, WATER	HEATER, WATER CIRCULATION, 40KW 480V 3PH, NEMA 4X HOUSING WITH THERMOSTAT	OGDEN MANUFACTURING INC	65586	CK5A-0284M7 MOD		1
104	A524798	GAGE, HEPA FILTER DIFFERENTIAL PRESSURE	DIFFERENTIAL PRESSURE GAGE, 0-4" WG, SERIES 2000 (HEPA)	DWYER INSTRUMENTS INC.	85274	2002		1
105	A524800	REFRIGERATION SYSTEM COMPRESSOR SKID (ASSEMBLY)		NA		NA	COMPRESSOR PACKAGE (2 TANDEM UNITS)	1
106	A524801	CONDENSER COIL	CONDENSING UNIT, V-COIL CONFIGURATION, 503 MBTU/HR CAPACITY, 1 5/8" INLET, 1 1/8" OUTLET, VARIABLE SPEED FANS, LOUVERED INLET PANELS	CUSTOM AIR COOLERS		QUOTE 08495R3	REF. DRAWING M-9D	1
107	A524802	CONDENSER COIL	CONDENSING UNIT, V-COIL CONFIGURATION, 503 MBTU/HR CAPACITY, 1 5/8" INLET, 1 1/8" OUTLET, VARIABLE SPEED FANS, LOUVERED INLET PANELS	CUSTOM AIR COOLERS		QUOTE 08495R3	REF. DRAWING M-9D	1
108	A524803	FAN MOTOR, CONDENSER	5 HP MOTOR, VARIABLE SPEED DUTY, 3600 RPM MAX, 480V, TEFC	TECO	60089	EP0052	PART OF CONDENSING UNIT, A524801	1
109	A524804	FAN MOTOR, CONDENSER	5 HP MOTOR, VARIABLE SPEED DUTY, 3600 RPM MAX, 480V, TEFC	TECO	60089	EP0052	PART OF CONDENSING UNIT, A524801	1
110	A524805	FAN MOTOR, CONDENSER	5 HP MOTOR, VARIABLE SPEED DUTY, 3600 RPM MAX, 480V, TEFC	TECO	60089	EP0052	PART OF CONDENSING UNIT, A524802	1
111	A524806	FAN MOTOR, CONDENSER	5 HP MOTOR, VARIABLE SPEED DUTY, 3600 RPM MAX, 480V, TEFC	TECO	60089	EP0052	PART OF CONDENSING UNIT, A524802	1
112	A524807	HEAT REJECTION SYSTEM LOW POINT DRAIN	1/2" BALL VALVE, 600 WOG, SOLDER FITTINGS, FULL PORT	CONBRACO INDUSTRIES	72219	70-103-01		1
113	A524808	PETCOCK, HEAT ABSORPTION COIL DRAIN	1/2" BALL VALVE, 600 WOG, SOLDER FITTINGS, FULL PORT	CONBRACO INDUSTRIES	72219	70-103-01		1
114	A524809	PUMP, WRAP AROUND COIL SYSTEM	PUMP/MOTOR ASSY, SERIES PR, 1" COMPANION FLANGE, ALL BRONZE CONSTRUCTION, 1/6 HP TEFC, 115V, 1 PH, 60HZ, 9.5 GPM, 11.5 FT HEAD.	BELL AND GOSSET	18189	BG 102206		1
115	A524810	PUMP, HEAT REJECTION SYSTEM	SERIES 321, SINGLE STAGE END SUCTION PUMP, ALL BRONZE CONSTRUCTION, 1" X 1.25" X 4" SIZE, 3.25" IMPELLER, DIAMETER, .5HP MOTOR, 3500 RPM, TEFC, STAINLESS STEEL SHAFT, BRONZE WEAR RING, SINGLE PHASE, 60HZ, 110 VAC, 14 GPM, 38 FT HEAD.	AURORA PUMP COMPANY	04579	MODEL 321	MADE TO ORDER IN ACCORDANCE WITH DESCRIPTION	1
116	A524811	FLOW CONTROL VALVE, HEAT REJECTION SYSTEM	1" BRASS DIVERTER VALVE, NO HANDLE, SERIES 44, 316 STAINLESS STEEL BALL AND STEM, TFE SEATS, TFE SEALS, COPPER ODS TUBE ENDS, V1 PORTING	WORCESTER CONTROLS CORP	16609	1DE4416TTTEV1		1
117		ACTUATOR, FLOW CONTROL VALVE, HEAT REJECTION SYSTEM	ELECTRIC ACTUATOR, WORCESTER SERIES 75 ELECTRIC ACTUATOR, WITH 4-20 MA POSITIONER, AND 4-20 MA FEEDBACK	WORCESTER CONTROLS CORP	16609	WOR 10A755Z-120A/DFP1744-120A		4
118	A524812	FLOW CONTROL VALVE, WRAP AROUND AROUND SYSTEM	3/4" BALL VALVE, 3 PC. SERIES 44, BRASS BODY, 316SS STEM, POLY FILLED SEAT, TFE COATED BODY SEAL, COPPER ODS TUBE ENDS.	WORCESTER CONTROLS CORP	16609	3/4-E4416-TMTE		1
119	A524813	EXPANSION VIBRATION JOINT, HEAT REJ. PUMP SUCTION	KEVLAR REINFORCED 1-5/8" RUBBER EXPANSION JOINT, 1-5/8" SOLDER COPPER FITTINGS	MASON INDUSTRIES	23180	SFU-CT-1 5/8"		1
120	A524814	EXPANSION VIBRATION JOINT, HEAT REJ. PUMP DISCHARGE	KEVLAR REINFORCED 1 5/8" RUBBER EXPANSION JOINT, 1 5/8" SOLDER COPPER FITTINGS	MASON INDUSTRIES	23180	SFU-CT-1 5/8"		1
121	A524815	PRECOOL COIL VENT (WRAP AROUND)	1/2" BALL VALVE, 600 WOG, SOLDER FITTINGS, FULL PORT	CONBRACO INDUSTRIES	72219	70-103-01		1
122	A524816	REHEAT COIL VENT (WRAP AROUND)	1/2" BALL VALVE, 600 WOG, SOLDER FITTINGS, FULL PORT	CONBRACO INDUSTRIES	72219	70-103-01		1
123	A524817	REHEAT COIL DRAIN (WRAP AROUND)	1/2" BALL VALVE, 600 WOG, SOLDER FITTINGS, FULL PORT	CONBRACO INDUSTRIES	72219	70-103-01		1
124	A524818	LOW POINT DRAIN, WRAP AROUND COIL SYSTEM	1/2" BALL VALVE, 600 WOG, SOLDER FITTINGS, FULL PORT	CONBRACO INDUSTRIES	72219	70-103-01		1
125	A524819	PRECOOL COIL DRAIN (WRAP AROUND)	1/2" BALL VALVE, 600 WOG, SOLDER FITTINGS, FULL PORT	CONBRACO INDUSTRIES	72219	70-103-01		1
126	A524820	HEAT ABSORPTION COIL VENT	1/2" BALL VALVE, 600 WOG, SOLDER FITTINGS, FULL PORT	CONBRACO INDUSTRIES	72219	70-103-01		1
127	A524821	HEAT REJECTION COIL VENT	1/2" BALL VALVE, 600 WOG, SOLDER FITTINGS, FULL PORT	CONBRACO INDUSTRIES	72219	70-103-01		1
128	A529793	PRE-FILTER, INLET	HIGH CAPACITY PLEATED PANEL FILTER, 24" X 24" X 2", 2000 CFM	CAMFIL FARR	35AL4	049880-005	CONSUMABLE 2 PER UNIT	1
129	A529794	FILTER, INLET, BAG	HPPMV-15, 65% EFFICIENCY BAG FILTER, 24" X 24" X 12"	CAMFIL FARR	35AL4	021385-005	CONSUMABLE	1
130	A529796	CARBON PRE-FILTER	HIGH CAPACITY PLEATED PANEL FILTER, 24" X 24" X 2", 2000 CFM	CAMFIL FARR	35AL4	049880-005	CONSUMABLE 2 PER UNIT	1
131	A529797	OUTLET SPOOL, OUTLET 1 DUCT	CUSTOM EXIT DUCT SPOOL PIECE	NA		NA		2
132	A529798	OUTLET SPOOL, OUTLET 2 DUCT	CUSTOM EXIT DUCT SPOOL PIECE	NA		NA		2

SYM	ZONE	DESCRIPTION	DATE	APPROVAL
REVISIONS				

SIGNATURES	DATE
DRAFTER T. JOBE	05/06/11
CHECKER D. MAY	05/06/11
ENGINEER A. JACQUES	05/06/11
R. WITHERSPOON	05/06/11
R. FRANCO	05/06/11
SUBMITTED T.O. ADAMS	05/06/11
APPROVED E.A. THAXTON	05/06/11

NATIONAL AERONAUTICS AND SPACE ADMINISTRATION
JOHN F. KENNEDY SPACE CENTER, NASA
KENNEDY SPACE CENTER, FLORIDA

ASSEMBLY DRAWINGS

MPPU REFURBISHMENT DESIGN
ENVIRONMENTAL CONTROL SYSTEM
"A" NUMBER COMPONENT LIST
CONTINUED

M-1B

SIZE F | DWG. NO. 584F0301001 | REV —

TITLE | PROJ. NO. 95255 | SHEET | OF

P:\95255\DRAWINGS\MECH\M-1B.DWG 21-APR-2011 16:44 JOBETL

EAR 99

FOR ANY PURPOSE OTHER THAN IN CONNECTION WITH A DEFINITELY RELATED GOVERNMENT PROCUREMENT OPERATION, THE UNITED STATES GOVERNMENT THEREBY INCURS NO RESPONSIBILITY NOR ANY OBLIGATION WHATSOEVER; AND THE FACT THAT THE GOVERNMENT MAY HAVE FORMULATED, FURNISHED, OR IN ANY WAY SUPPLIED THE SAID DRAWINGS, SPECIFICATIONS OR ANY OTHER DATA IS NOT TO BE REGARDED BY IMPLICATION OR OTHERWISE IN ANY MANNER LICENSING THE HOLDER OR ANY OTHER PERSONS OR CORPORATION, OR CONVEYING ANY RIGHTS OR PERMISSION TO MANUFACTURE, USE, OR SELL ANY PATENTED INVENTION THAT IN ANY WAY BE RELATED THERETO.

EAR 99 – NO LICENSE REQUIRED

The information contained in this document is technical in content, but not technical data as defined by the International Traffic in Arms (ITAR) or the Export Administration Regulations (EAR), and therefore is EAR 99 NLR, not ITAR controlled and subject to public release. (General Prohibition Six (Embargo) applies to all items subject to the EAR, i.e. items on the CCL and within EAR 99 NLR. You may not make an export or reexport contrary to the provisions of part 746 (Embargos and Other Special Controls) of the EAR and 22 CFR part 126.1 of the ITAR).

EDDR # 113043 : NASA KSC Export Control Office (321-867-9209)

EAR 99

COMPONENT LIST

ITEM	A NUMBER	SYSTEM LOCATION	PART DESCRIPTION	MANUFACTURER	CAGE CODE	PART NUMBER	COMMENTS	REFURBISHMENT NOTE
134	A529799	OUTLET SPOOL, OUTLET 3 DUCT	CUSTOM EXIT DUCT SPOOL PIECE	NA		NA		2
134	A529800	TEMPERATURE TRANSDUCER, COLD COIL	TEMPERATURE SENSOR ASSEMBLY, 1/4" DIAMETER, DUAL TYPE T SENSOR, 304 STAINLESS SHEATH, UNGROUNDED AND INSULATED, 18" PROBE	THERMO SENSORS CO	5K008	42T34-UI-18-5B		1
135	A529801	FLEX COUPLING, BLOWER INLET	FLEXIBLE DUCT, 14" ID X 7" LG	ROYAL ENGINEERED COMPOSITES	16357	RP97-100-56-28-4		2
136	A529802	FLEX COUPLING, COOLING CHAMBER INLET	FLEXIBLE DUCT, 14" ID X 7" LG	ROYAL ENGINEERED COMPOSITES	16357	RP97-100-56-28-4		2
137	A529803	FLEXIBLE COUPLING, EXHAUST SILENCER	FLEXIBLE DUCT, 14" ID X 7" LG	ROYAL ENGINEERED COMPOSITES	16357	RP97-100-56-28-4		2
138	A529804	FLEXIBLE COUPLING, OUTLET 1	FLEXIBLE DUCT, 5 5/8" ID X 7" LG	ROYAL ENGINEERED COMPOSITES	16357	RP97-100-22.5-28-4		2
139	A529805	FLEXIBLE COUPLING, OUTLET 2	FLEXIBLE DUCT, 6 5/8" ID X 7" LG	ROYAL ENGINEERED COMPOSITES	16357	RP97-100-26.5-28-4		2
140	A529806	FLEXIBLE COUPLING, OUTLET 3	FLEXIBLE DUCT, 5 5/8" ID X 7" LG	ROYAL ENGINEERED COMPOSITES	16357	RP97-100-22.5-28-4		2
141	A529807	EXPANSION/VIBRATION JOINT REHEAT WATER	KEVLAR REINFORCED 1-1/2" RUBBER EXPANSION JOINT, 1-1/2" SOLDER COPPER FITTINGS	MASON INDUSTRIES	23180	SFU-CT-1 1/2"		1
142	A529808	EXPANSION/VIBRATION JOINT REHEAT WATER	KEVLAR REINFORCED 1-1/2" RUBBER EXPANSION JOINT, 1-1/2" SOLDER COPPER FITTINGS	MASON INDUSTRIES	23180	SFU-CT-1 1/2"		1
143	A529809	EXPANSION/VIBRATION JOINT WRAP AROUND PUMP	KEVLAR REINFORCED 1" RUBBER EXPANSION JOINT, 1-1/8"ODF SOLDER COPPER FITTINGS	MASON INDUSTRIES	23180	SFU-CT-1 1/8"		1
144	A529810	EXPANSION/VIBRATION JOINT WRAP AROUND PUMP	KEVLAR REINFORCED 1" RUBBER EXPANSION JOINT, 1-1/8"ODF SOLDER COPPER FITTINGS	MASON INDUSTRIES	23180	SFU-CT-1 1/8"		1
145	A529811	RELIEF VALVE, OUTLET 1, REHEAT COIL	1/2" BALL VALVE, 600 WOG, SOLDER FITTINGS, FULL PORT	CONBRACO INDUSTRIES	72219	70-103-01		1
146	A529812	RELIEF VALVE, OUTLET 2, REHEAT COIL	1/2" BALL VALVE, 600 WOG, SOLDER FITTINGS, FULL PORT	CONBRACO INDUSTRIES	72219	70-103-01		1
147	A529813	RELIEF VALVE, OUTLET 3, REHEAT COIL	1/2" BALL VALVE, 600 WOG, SOLDER FITTINGS, FULL PORT	CONBRACO INDUSTRIES	72219	70-103-01		1
148	A529814	SCREEN, FLOW DIFFUSING, PLENUM INLET	INLET SCREEN, FLOW DIFFUSING, PLENUM INLET	NA		NA	REF. DRAWING M-11A	3
149	A529815	SCREEN, FLOW DIFFUSING, PLENUM INLET	INLET SCREEN, FLOW DIFFUSING, PLENUM INLET	NA		NA	REF. DRAWING M-11A	3
150	A529816	WRAP AROUND COIL, PRE-COOL	COIL, 5/8" OD COPPER TUBE, .010 THK COPPER FINS, 12 FINS PER INCH, 33" X 45" FACE DIMENSIONS	MARLO		1W22-45-5612F-10.3-H-.25-R-B	MARLO DRAWING NUMBER 25306C200	3
151	A529817	WRAP AROUND COIL, REHEAT	COIL, 5/8" OD COPPER TUBE, .010 THK COPPER FINS, 12 FINS PER INCH, 33" X 45" FACE DIMENSIONS	MARLO		1W22-45-5612F-10.3-H-.25-R-B	MARLO DRAWING NUMBER 25306C200	3
152	A529818	PRESSURE CAP, HOT WATER, 16 LB	PRESSURE RELIEF CAP, 16 PSI	STANT MANUFACTURING CO.	78225	10231		1
153	A529819	EXPANSION TANK, HOT WATER, 1 GAL	1 GALLON POLYETHELYNE CONTAINER, FLAT TOP, WITH CAP	U.S. PLASTICS		180701		1
154	A529898	REFRIGERATION SYSTEM EXPANSION VALVE	ELECTRONIC EXPANSION VALVE, STEPPER MOTOR CONTROL, 1 1/8" ODF COPPER INLET, 1 3/8" COPPER OUTLET, SEI-30 BODY	SPORLAN	78462	SEI-30-1 1/8-1 3/8-0DF-10-S		1
155	A529899	REFRIGERATION SYSTEM EXPANSION VALVE	ELECTRONIC EXPANSION VALVE, STEPPER MOTOR CONTROL, 1 1/8" ODF COPPER INLET, 1 3/8" COPPER OUTLET, SEI-30 BODY	SPORLAN	78462	SEI-30-1 1/8-1 3/8-0DF-10-3		1
156	A529901	COMPRESSOR, REFRIGERATION	480 VAC, 3 PH, 60 HZ, TANDEM COMPRESSOR, R410A SERVICE, 555 BTU/HR NAMEPLATE CAPACITY	EMERSON	5L304	ZPT-570KCE-TWD	TANDEM UNIT	1
157	A529902	COMPRESSOR, REFRIGERATION		NA		NA	INDIVIDUAL COMPRESSOR, PART OF TANDEM UNIT	1
158	A529903	COMPRESSOR, REFRIGERATION	480 VAC, 3 PH, 60 HZ, TANDEM COMPRESSOR, R410A SERVICE, 555 BTU/HR NAMEPLATE CAPACITY	EMERSON	5L304	ZPT-570KCE-TWD	TANDEM UNIT	1
159	A529904	COMPRESSOR, REFRIGERATION		NA		NA	INDIVIDUAL COMPRESSOR, PART OF TANDEM UNIT	1
160	A529905	REFRIGERATION SYSTEM ISOLATION VALVE	1 5/8" ODS MANUAL ISOLATION BALL VALVE, WITH ACCESS PORT AND FITTINGS, TEFLON SEATS, BRONZE BODY	SPORLAN	78462	EBVT-1130	COMPRESSOR DISCHARGE LINE	1
161	A529906	REFRIGERATION SYSTEM ISOLATION VALVE	1 5/8" ODS MANUAL ISOLATION BALL VALVE, WITH ACCESS PORT AND FITTINGS, TEFLON SEATS, BRONZE BODY	SPORLAN	78462	EBVT-1130	COMPRESSOR DISCHARGE LINE	1
162	A529907	STRAINER W/FILTER CARTRIDGE	REPLACEABLE SUCTION FILTER, 2 1/8" ODF SOLDER CONNECTION, DUAL FILTER ELEMENT (RC-4864), 5006 SQ CM FILTER AREA, 48 TON CAPACITY, 500 PSIG MAX, RPE-48-BD ELEMENT USED AFTER CHECKOUT	SPORLAN	78462	RSF-9617-T	COMPRESSOR SUCTION STRAINER (CONSUMABLE FILTER)	1
163	A529908	STRAINER W/FILTER CARTRIDGE	REPLACEABLE SUCTION FILTER, 2 1/8" ODF SOLDER CONNECTION, DUAL FILTER ELEMENT (RC-4864), 5006 SQ CM FILTER AREA, 48 TON CAPACITY, 500 PSIG MAX, RPE-48-BD ELEMENT USED AFTER CHECKOUT	SPORLAN	78462	RSF-9617-T	COMPRESSOR SUCTION STRAINER (CONSUMABLE FILTER)	1
164	A529913	PRESSURE RELIEF CAP, HEAT REJECTION SYTEM	PRESSURE RELIEF CAP, 16 PSI	STANT MANUFACTURING CO.	78225	10231		1
165	A529914	TANK, EXPANSION HEAT REJECTION SYTEM	1 GALLON POLYETHELYNE CONTAINER, FLAT TOP, WITH CAP	U.S. PLASTICS		180701		1
166	A529915	PRESSURE CAP, WRAP AROUND	PRESSURE RELIEF CAP, 16 PSI	STANT MANUFACTURING CO.	78225	10231		1
167	A529916	TANK, EXPANSION, WRAP AROUND	1 GALLON POLYETHELYNE CONTAINER, FLAT TOP, WITH CAP	U.S. PLASTICS		180701		1
168	A529917	HOT GAS BYPASS VALVE	ELECTRONIC CONTROL VALVE, 1 1/8" ODF SOLDER CONNECTIONS, BODY SDR-4	SPORLAN	78462	SDR-4-1 1/8"-1 1/8"-10-S		1
169	A529918	HOT GAS BYPASS VALVE	ELECTRONIC CONTROL VALVE, 1 1/8" ODF SOLDER CONNECTIONS, BODY SDR-4	SPORLAN	78462	SDR-4-1 1/8"-1 1/8"-10-S		1
170	A529919	THERMOMETER, EXIT, OUTLET 2	THERMOMETER, BI-METAL 6" DIA., RANGE 0-200F	TAYLOR PRECISION PRODUCTS INC	0YZF7	BA5106E-081		2
171	A529920	THERMOMETER, EXIT, OUTLET 1	THERMOMETER, BI-METAL 6" DIA., RANGE 0-200F	TAYLOR PRECISION PRODUCTS INC	0YZF7	BA5106E-081		2
172	A529921	THERMOMETER, EXIT, OUTLET 3	THERMOMETER, BI-METAL 6" DIA., RANGE 0-200F	TAYLOR PRECISION PRODUCTS INC	0YZF7	BA5106E-081		2

GENERAL NOTES:

1. SEE SHEET M-1 FOR GENERAL NOTES.

REFURBISHMENT NOTES:

1. REPLACE WITH SIMILAR COMPONENT AND/OR 1. REPLACE WITH EQUIVALENT COMPONENT AND/OR UPDATED MODEL NUMBER.

2. RE-USE (SUBJECT TO INSPECTION BY THE CONTRACTOR, PROVIDE RECOMMENDATION FOR REPLACEMENT TO THE CONTRACTING OFFICER OR DESIGNATED REPRESENTATIVE, DO NOT REPLACE ANY COMPONENT WITHOUT APPROVAL FROM THE CONTRACTING OFFICER OR DESIGNATED REPRESENTATIVE).

3. REFURBISH.

4. NEW SCOPE.

EAR 99

SYM	ZONE	DESCRIPTION	DATE	APPROVAL
REVISIONS				

SIGNATURES		DATE
DRAFTER	T. JOBE	05/06/11
CHECKER	D. MAY	05/06/11
ENGINEER	A. JACQUES	05/06/11
	R. WITHERSPOON	05/06/11
	R. FRANCO	05/06/11
SUBMITTED	T.O. ADAMS	05/06/11
APPROVED	E.A. THAXTON	05/06/11

NATIONAL AERONAUTICS AND SPACE ADMINISTRATION
JOHN F. KENNEDY SPACE CENTER, NASA
KENNEDY SPACE CENTER, FLORIDA

ASSEMBLY DRAWINGS

MPPU REFURBISHMENT DESIGN
ENVIRONMENTAL CONTROL SYSTEM
"A" NUMBER COMPONENT LIST
CONTINUED

SIZE	DWG. NO.	REV
F	584F0301001	—

PROJ. NO. 95255 | SHEET | OF

M-1C

P:\95255\DRAWINGS\MECH\M-1C.DWG 21-APR-2011 16:52 JOBEL

KSC FORM 1-11 (REV. 3/76) (C/G 3/93)

EAR 99

FOR ANY PURPOSE OTHER THAN IN CONNECTION WITH A DEFINITELY RELATED GOVERNMENT PROCUREMENT OPERATION, THE UNITED STATES GOVERNMENT THEREBY INCURS NO RESPONSIBILITY NOR ANY OBLIGATION WHATSOEVER; AND THE FACT THAT THE GOVERNMENT MAY HAVE FORMULATED, FURNISHED, OR IN ANY WAY SUPPLIED THE SAD DRAWINGS, SPECIFICATIONS OR ANY OTHER DATA IS NOT TO BE REGARDED BY IMPLICATION OR OTHERWISE IN ANY MANNER LICENSING THE HOLDER OR ANY OTHER PERSONS OR CORPORATION, OR CONVEYING ANY RIGHTS OR PERMISSION TO MANUFACTURE, USE, OR SELL ANY PATENTED INVENTION THAT IN ANY WAY BE RELATED THERETO.

EAR 99 – NO LICENSE REQUIRED

The information contained in this document is technical in content, but not technical data as defined by the International Traffic in Arms (ITAR) or the Export Administration Regulations (EAR), and therefore is EAR 99 NLR, meaning it is non-regulated, suitable for public release. (General Prohibition Six (Embargo) applies to all items subject to the EAR, i.e. items on the CCL and within EAR 99 NLR. You may not make an export or reexport contrary to the provisions of part 746 (Embargos and Other Special Controls) of the EAR and 22 CFR part 126.1 of the ITAR).

EDDR # 113043 : NASA KSC Export Control Office (321- 867-9209)

SPECIFIC NOTES:

A. SEE SH M-6 FOR PLAN W/ CONDENSERS REMOVED.

B. 1/8" THICK AL SHEET 6061-T6 ASTM B209.

C. TRANSFER DRILL HOLES THRU SHEET TO STEEL FRAME (NOT STRUCTURAL TUBE). HOLES SHALL BE EQUALLY SPACED ON 6" CENTERS ALL AROUND.

D. USE 1/8" THICK NEOPRENE RUBBER GASKET, 40 DUROMETER, BETWEEN AL SHEET AND STEEL FRAME.

E. COMPRESSOR SUPPORT STRUCTURE SHALL BE MODIFIED IN ACCORDANCE WITH SPECIFIED COMPRESSOR UNITS. SUPPORTS SHALL BE VIBRATION ISOLATED IN ACCORDANCE WITH MANUFACTURER RECOMMENDATIONS. STRUCTURAL SUPPORT SHALL BE SUBMITTED TO GOVERNMENT FOR APPROVAL.

SPECIFIC NOTES:

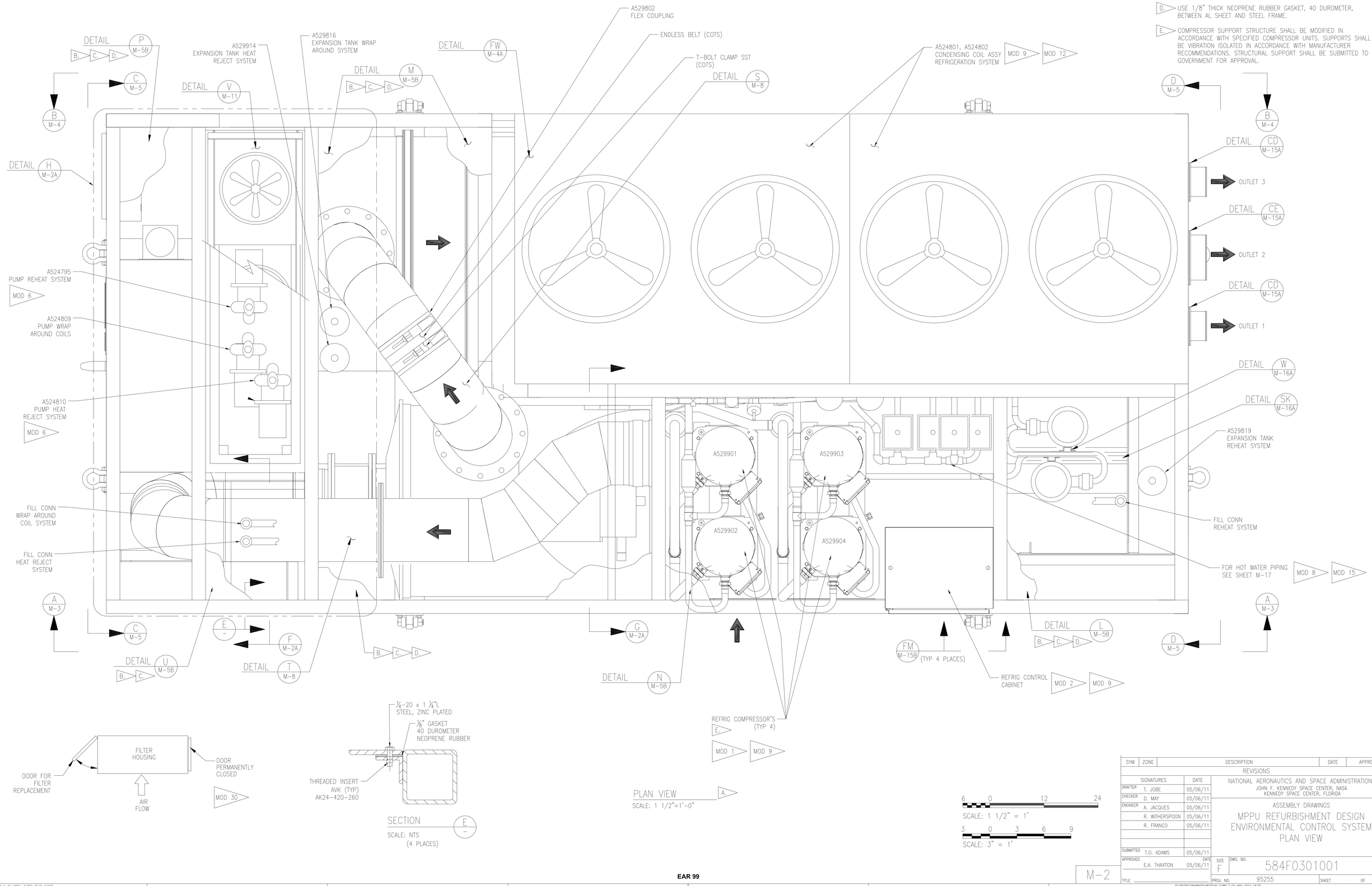

SECTION E –
SCALE: NTS
(4 PLACES)

PLAN VIEW A.
SCALE: 1 1/2"=1'–0"

6 0 12 24
SCALE: 1 1/2" = 1'

3 0 3 6 9
SCALE: 3" = 1'

SYM	ZONE	DESCRIPTION	DATE	APPROVAL
		REVISIONS		

SIGNATURES		DATE
DRAFTER	T. JOBE	05/06/11
CHECKER	D. MAY	05/06/11
ENGINEER	A. JACQUES	05/06/11
	R. WITHERSPOON	05/06/11
	R. FRANCO	05/06/11
SUBMITTED	T.O. ADAMS	05/06/11
APPROVED	E.A. THAXTON	05/06/11

NATIONAL AERONAUTICS AND SPACE ADMINISTRATION
JOHN F. KENNEDY SPACE CENTER, NASA
KENNEDY SPACE CENTER, FLORIDA

ASSEMBLY DRAWINGS

MPPU REFURBISHMENT DESIGN
ENVIRONMENTAL CONTROL SYSTEM
PLAN VIEW

SIZE F | DWG. NO. 584F0301001 | REV —

TITLE | PROJ. NO. 95255 | SHEET | OF

P:\95255\DRAWINGS\MECH\M-2.DWG 02-MAY-2011 16:25 JOBETL

M-2

KSC FORM 1-11 (REV. 3/76) (C/G 3/93)

FOR ANY PURPOSE OTHER THAN IN CONNECTION WITH A DEFINITELY RELATED GOVERNMENT PROCUREMENT OPERATION, THE UNITED STATES GOVERNMENT THEREBY INCURS NO RESPONSIBILITY NOR ANY OBLIGATION WHATSOEVER; AND THE FACT THAT THE GOVERNMENT MAY HAVE FORMULATED, FURNISHED, OR IN ANY WAY SUPPLIED THE SAID DRAWINGS, SPECIFICATIONS OR ANY OTHER DATA IS NOT TO BE REGARDED BY IMPLICATION OR OTHERWISE IN ANY MANNER LICENSING THE HOLDER OR ANY OTHER PERSONS OR CORPORATION, OR CONVEYING ANY RIGHTS OR PERMISSION TO MANUFACTURE, USE, OR SELL ANY PATENTED INVENTION THAT IN ANY WAY BE RELATED THERETO.

EAR 99 – NO LICENSE REQUIRED

The information contained in this document is technical in content, but not technical data as defined by the International Traffic in Arms Regulations (ITAR) or the Export Administration Regulations (EAR), and therefore is EAR 99 NLR, meaning no license required, suitable for public release. (General Prohibition Six (Embargo) applies to all items subject to the EAR, i.e. items on the CCL and within EAR 99 NLR. You may not make an export or reexport contrary to the provisions of part 746 (Embargos and Other Special Controls) of the EAR and 22 CFR part 126.1 of the ITAR).

EDDR # 113043 : NASA KSC Export Control Office (321- 867-9209)

EAR 99

SPECIFIC NOTES:

A. MODIFY OR REMAKE SUPPORTS IN ACCORDANCE WITH MANUFACTURERS RECOMMENDATIONS & IN ACCORDANCE WITH MODIFIED PUMP DIMENSIONS.

B. PUMP UNITS SHALL BE VIBRATION ISOLATED FROM SUPPORT STRUCTURE BY MEANS OF RUBBER GROMMETS, ISOLATION PADS OR ENGINEERING APPROVED EQUIVALENT.

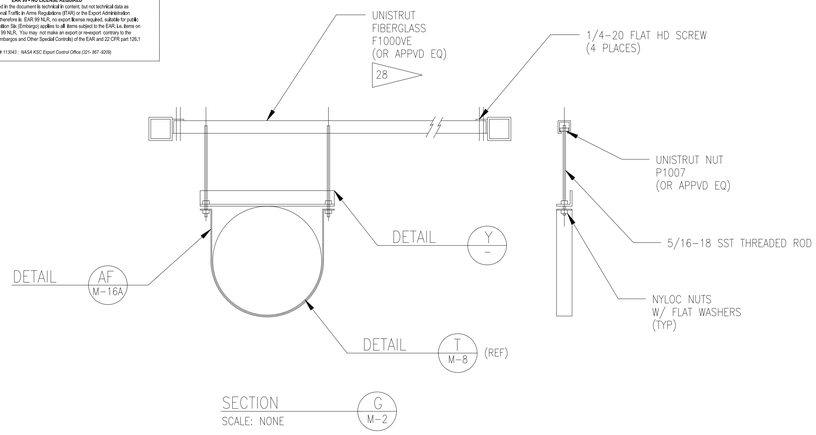

SECTION G M-2
SCALE: NONE

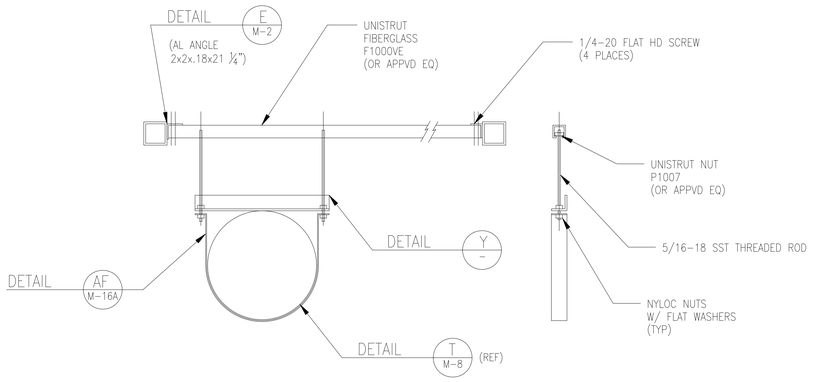

SECTION F M-2
SCALE: NONE

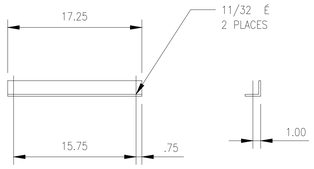

DETAIL Y –
SCALE: 1 1/2"=1'-0"

MAT'L: AL ANGLE 2x2x.18
ALLOY 6061-T6

QTY: 2 PER UNIT

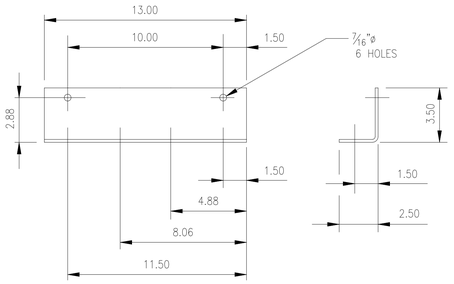

DETAIL AD –
SCALE: 3"=1'-0"

MAT'L: 7 GAGE
SST STEEL

QTY: 2 PER UNIT

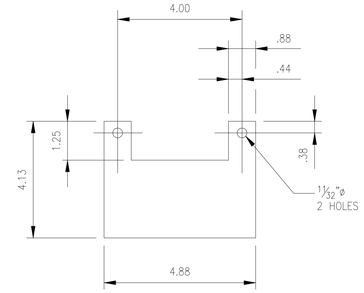

DETAIL AC –
SCALE: 6"=1'-0"
MOD 6
A.

MAT'L: 11 GAGE SST STEEL

QTY: 3 PER UNIT

NOTE: FURNISH AS LOOSE PIECES
FINISHED PER SPECIFICATION

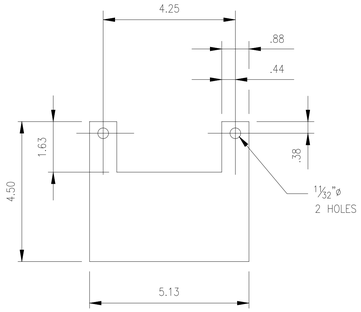

DETAIL AB –
SCALE: 6"=1'-0"

MAT'L: 11 GAGE SST STEEL

QTY: 1 PER UNIT

NOTE: FURNISH AS LOOSE PIECE
FINISHED PER SPECIFICATION

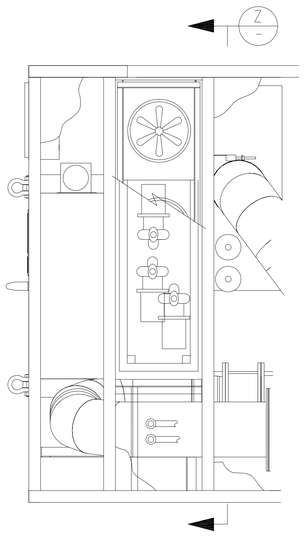

DETAIL H M-2
SCALE: 1"=1'-0"

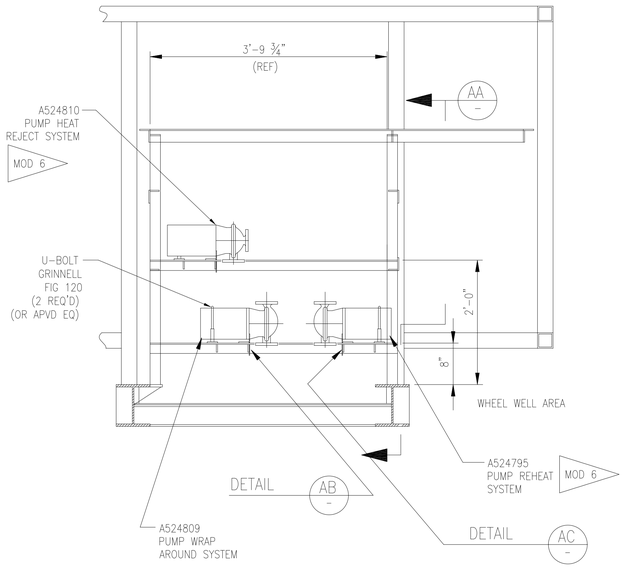

SECTION Z –
SCALE: 1"=1'-0"

(ROTATED 90°)

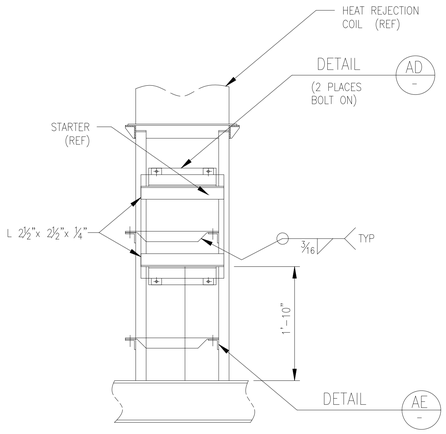

SECTION AA –
SCALE: 1"=1'-0"

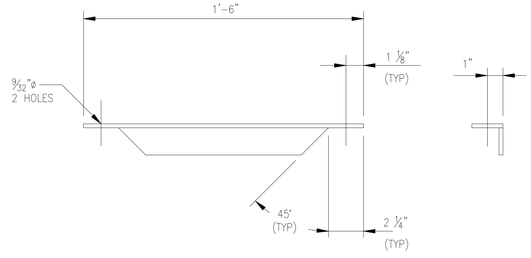

DETAIL AE –
SCALE: 3"=1'-0"

MAT'L: L 2x2x1/4
STRUCTURAL STEEL

QTY: 6 PER UNIT
FURNISHED LOOSE
BOLT IN AT ASSEMBLY

0 2 4 6
SCALE: 6"=1'-0"

0 1'
SCALE: 3"=1'-0"

6 0 12 24
SCALE: 1 1/2"=1'-0"

SYM	ZONE	DESCRIPTION	DATE	APPROVAL
		REVISIONS		

SIGNATURES		DATE
DRAFTER	T. JOBE	05/06/11
CHECKER	D. MAY	05/06/11
ENGINEER	A. JACQUES	05/06/11
	R. WITHERSPOON	05/06/11
	R. FRANCO	05/06/11
SUBMITTED	T.O. ADAMS	05/06/11
APPROVED	E.A. THAXTON	05/06/11

NATIONAL AERONAUTICS AND SPACE ADMINISTRATION
JOHN F. KENNEDY SPACE CENTER, NASA
KENNEDY SPACE CENTER, FLORIDA

ASSEMBLY DRAWINGS

MPPU REFURBISHMENT DESIGN ENVIRONMENTAL CONTROL SYSTEM HANGER DETAILS

SIZE	DWG. NO.	REV
F	584F0301001	–
PROJ. NO. 95255	SHEET	OF

TITLE

M-2A

P:\95255\DRAWINGS\MECH\M-2A.DWG 28-MAR-2011 16:55 JOBETL

KSC FORM 1-11 (REV. 3/76) (C/G 3/93)

EAR 99

FOR ANY PURPOSE OTHER THAN IN CONNECTION WITH A DEFINITELY RELATED GOVERNMENT PROCUREMENT OPERATION, THE UNITED STATES GOVERNMENT THEREBY INCURS NO RESPONSIBILITY NOR ANY OBLIGATION WHATSOEVER; AND THE FACT THAT THE GOVERNMENT MAY HAVE FORMULATED, FURNISHED, OR IN ANY WAY SUPPLIED THE SAID DRAWINGS, SPECIFICATIONS OR ANY OTHER DATA IS NOT TO BE REGARDED BY IMPLICATION OR OTHERWISE IN ANY MANNER LICENSING THE HOLDER OR ANY OTHER PERSONS OR CORPORATION, OR CONVEYING ANY RIGHTS OR PERMISSION TO MANUFACTURE, USE, OR SELL ANY PATENTED INVENTION THAT IN ANY WAY BE RELATED THERETO.

EAR 99 – NO LICENSE REQUIRED

The information contained in this document is technical in content, but not technical data as defined by the International Traffic in Arms (ITAR) or the Export Administration Regulations (EAR), and therefore is EAR 99 NLR, no export license required, suitable for public release. (General Prohibition Six (Embargo) applies to all items subject to the EAR, i.e. items on the CCL and within EAR 99 NLR. You may not make an export or reexport contrary to the provisions of part 746 (Embargos and Other Special Controls) of the EAR and 22 CFR part 126.1 of the ITAR).

EDDR # 113043 : NASA KSC Export Control Office (321- 867-9209)

SPECIFIC NOTES:

A. MATCH DRILL HOLES THRU LOUVER FLANGE AND/OR HINGE TO STEEL FRAME (NOT STRUCTURAL TUBE). HOLES SHALL BE EQUALLY SPACED ON 12" CENTERS ALL AROUND, OR IN HINGE AS APPLICABLE.

B. 1/8" THICK ALUMINUM SHEET 6061-T6, ASTM B209.

C. TRANSFER DRILL HOLES THRU ALUMINUM SHEET TO STEEL FRAME (NOT STRUCTURAL TUBE). HOLES SHALL BE EQUALLY SPACED ON 6" CENTERS ALL AROUND.

D. PROVIDE 1/8" THICK NEOPRENE RUBBER GASKET, 40 DUROMETER, BETWEEN ALUMINUM AND STEEL FRAME.

E. FOR NUMBERED FLAG NOTES REFER TO SHEET M-1.

F. ATTACH ALL EXTERIOR PANELS AND LOUVERS WITH 1/4-20x1-1/4 HEX HD BOLT, STAINLESS STEEL WITH FLAT AND LOCK WASHERS.

G. INFLATE ALL TIRES TO MANUFACTURE SPECIFICATIONS.

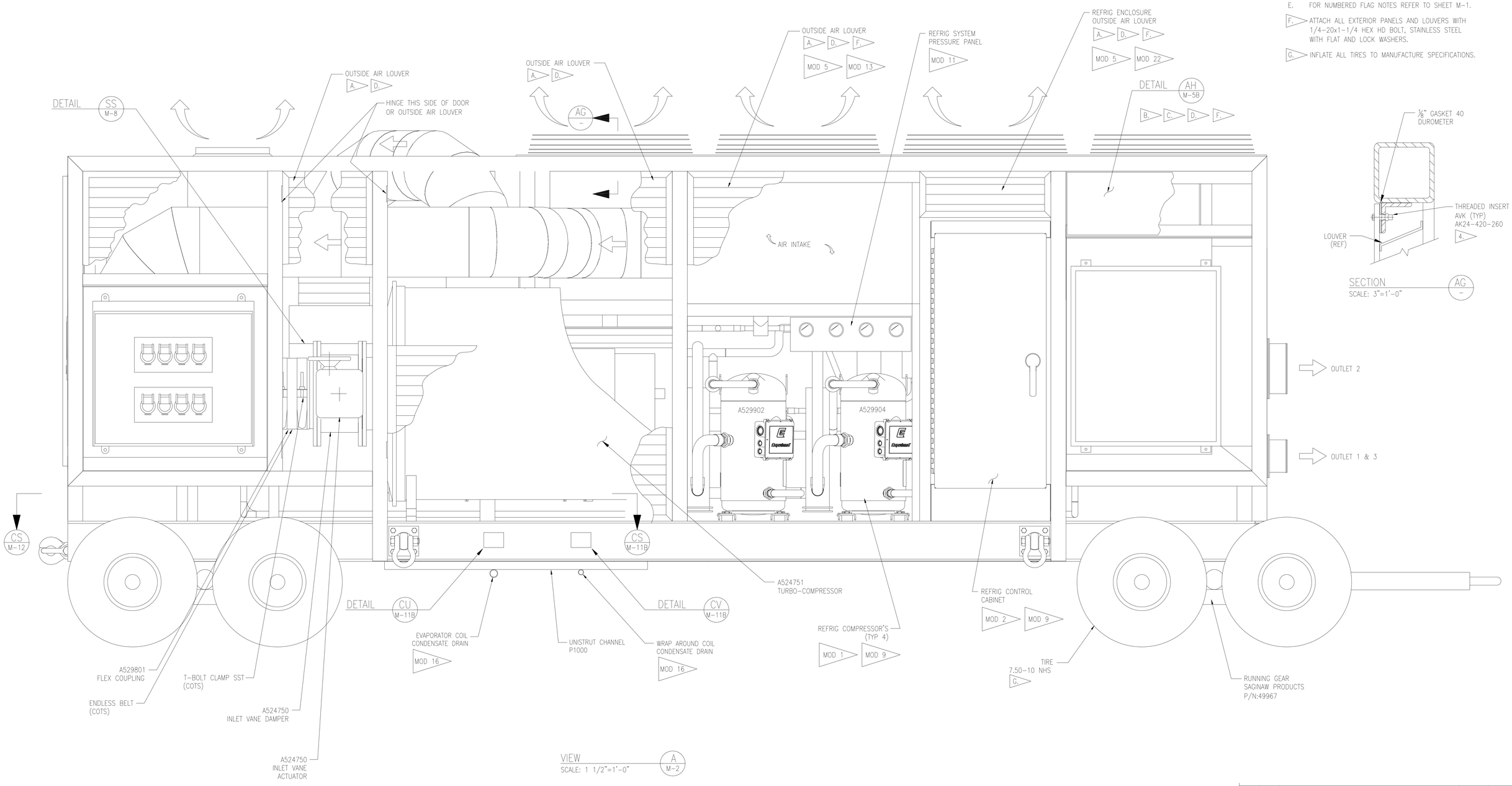

VIEW A M-2
SCALE: 1 1/2"=1'-0"

SECTION AG –
SCALE: 3"=1'-0"

6 0 12 24
SCALE: 1 1/2" = 1'

SYM	ZONE	DESCRIPTION	DATE	APPROVAL
REVISIONS				

	SIGNATURES	DATE
DRAFTER	T. JOBE	05/06/11
CHECKER	D. MAY	05/06/11
ENGINEER	A. JACQUES	05/06/11
	R. WITHERSPOON	05/06/11
	R. FRANCO	05/06/11
SUBMITTED	T.O. ADAMS	05/06/11
APPROVED	E.A. THAXTON	05/06/11

NATIONAL AERONAUTICS AND SPACE ADMINISTRATION
JOHN F. KENNEDY SPACE CENTER, NASA
KENNEDY SPACE CENTER, FLORIDA

ASSEMBLY DRAWINGS
MPPU REFURBISHMENT DESIGN
ENVIRONMENTAL CONTROL SYSTEM
RIGHT SIDE VIEW

TITLE

SIZE F | DWG. NO. 584F0301001 | REV –

PROJ. NO. 95255 | SHEET | OF

M-3

P:\95255\DRAWINGS\MECH\M-3.DWG 02-MAY-2011 16:26 JOBETL

KSC FORM 1-11 (REV. 3/76) (C/G 3/93)

FOR ANY PURPOSE OTHER THAN IN CONNECTION WITH A DEFINITELY RELATED GOVERNMENT PROCUREMENT OPERATION, THE UNITED STATES GOVERNMENT THEREBY INCURS NO RESPONSIBILITY NOR ANY OBLIGATION WHATSOEVER; AND THE FACT THAT THE GOVERNMENT MAY HAVE FORMULATED, FURNISHED, OR IN ANY WAY SUPPLIED THE SAID DRAWINGS, SPECIFICATIONS OR ANY OTHER DATA IS NOT TO BE REGARDED BY IMPLICATION OR OTHERWISE IN ANY MANNER LICENSING THE HOLDER OR ANY OTHER PERSONS OR CORPORATION, OR CONVEYING ANY RIGHTS OR PERMISSION TO MANUFACTURE, USE, OR SELL ANY PATENTED INVENTION THAT IN ANY WAY BE RELATED THERETO.

EAR 99 – NO LICENSE REQUIRED

The information contained in this document is technical in content, but not technical data as defined by the International Traffic in Arms (ITAR) or the Export Administration Regulations (EAR), and therefore is EAR 99 NLR, no export license required, suitable for public release. (General Prohibition Six (Embargo) applies to all items subject to the EAR, i.e. items on the CCL and within EAR 99 NLR. You may not make an export or reexport contrary to the provisions of part 746 (Embargos and Other Special Controls) of the EAR and 22 CFR part 126.1 of the ITAR).

EDDR # 113043 : NASA KSC Export Control Office (321-867-6039)

EAR 99

SPECIFIC NOTES:

A. TRANSFER DRILL HOLES THRU LOUVER FLANGE TO STEEL FRAME (NOT STRUCTURAL TUBE). HOLES SHALL BE EQUALLY SPACED ON 12" CENTERS ALL AROUND.

B. SEE SHEET E-25A FOR TRANSMITTER MOUNTING.

C. PROVIDE 1/8" THICK NEOPRENE RUBBER GASKET, 40 DUROMETER, BETWEEN ALUM AND STEEL FRAME.

D. ATTACH ALL EXTERIOR PANELS AND LOUVERS WITH 1/4-20x1-1/4 HEX HEAD BOLTS, STAINLESS STEEL, WITH FLAT AND LOCK WASHERS.

E. PANEL MOUNTING DETAIL SHALL BE COORDINATED BY CONTRACTOR IN ACCORDANCE WITH ENCLOSURE SELECTION.

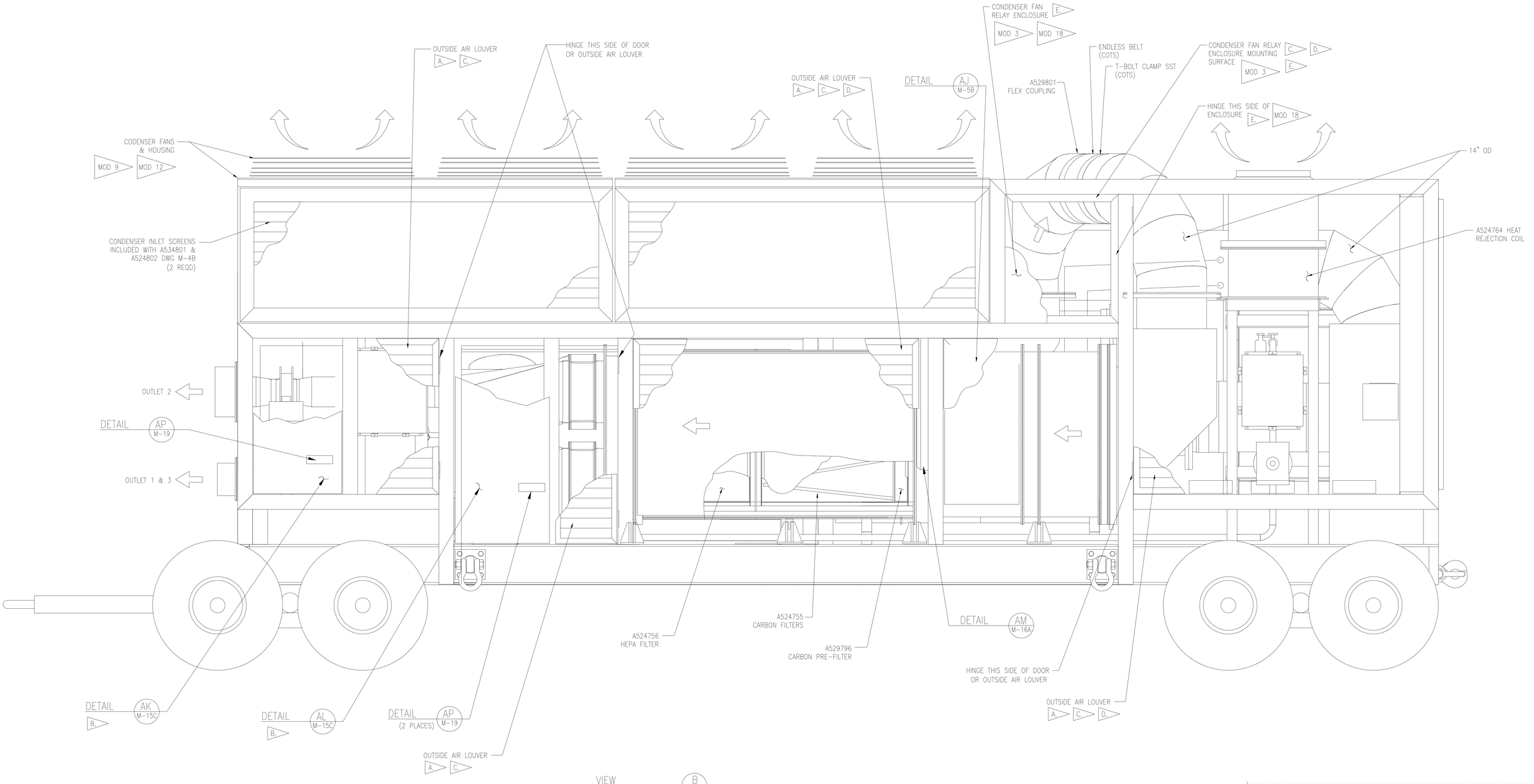

VIEW B M-2
SCALE: 1 1/2"=1'-0"

(INSULATION AND INSTRUMENTATION NOT SHOWN)

6 0 12 24
SCALE: 1 1/2" = 1'

SYM	ZONE	DESCRIPTION	DATE	APPROVAL
		REVISIONS		

	SIGNATURES	DATE
DRAFTER	T. JOBE	05/06/11
CHECKER	D. MAY	05/06/11
ENGINEER	A. JACQUES	05/06/11
	R. WITHERSPOON	05/06/11
	R. FRANCO	05/06/11
SUBMITTED	T.O. ADAMS	05/06/11
APPROVED	E.A. THAXTON	05/06/11

NATIONAL AERONAUTICS AND SPACE ADMINISTRATION
JOHN F. KENNEDY SPACE CENTER, NASA
KENNEDY SPACE CENTER, FLORIDA

ASSEMBLY DRAWINGS

MPPU REFURBISHMENT DESIGN ENVIRONMENTAL CONTROL SYSTEM LEFT SIDE VIEW

TITLE

SIZE F | DWG. NO. 584F0301001 | REV –

PROJ. NO. 95255 | SHEET OF

P:\95255\DRAWINGS\MECH\M-4.DWG 21-FEB-2011 15:53 JOBEL

M-4

EAR 99

KSC FORM 1-11 (REV. 3/76) (C/G 3/93)

FOR ANY PURPOSE OTHER THAN IN CONNECTION WITH A DEFINITELY RELATED GOVERNMENT PROCUREMENT OPERATION, THE UNITED STATES GOVERNMENT THEREBY INCURS NO RESPONSIBILITY NOR ANY OBLIGATION WHATSOEVER; AND THE FACT THAT THE GOVERNMENT MAY HAVE FORMULATED, FURNISHED, OR IN ANY WAY SUPPLIED THE SAID DRAWINGS, SPECIFICATIONS OR ANY OTHER DATA IS NOT TO BE REGARDED BY IMPLICATION OR OTHERWISE IN ANY MANNER LICENSING THE HOLDER OR ANY OTHER PERSONS OR CORPORATION, OR CONVEYING ANY RIGHTS OR PERMISSION TO MANUFACTURE, USE, OR SELL ANY PATENTED INVENTION THAT IN ANY WAY BE RELATED THERETO.

EAR 99 – NO LICENSE REQUIRED

The information contained in this document is technical in content, but not technical data as defined by the International Traffic in Arms (ITAR) or the Export Administration Regulations (EAR), and therefore is EAR 99 N.L.R. Hence no export license required, subject to public release. (General Prohibition Six (Embargo) applies to all items subject to the EAR, i.e. items on the CCL and within EAR 99 N.L.R.. You may not make an export or reexport contrary to the provisions of part 746 (Embargos and Other Special Controls) of the EAR and 22 CFR part 126.1 of the ITAR).

EDDR # 113043 : NASA KSC Export Control Office (321- 867-9209)

EAR 99

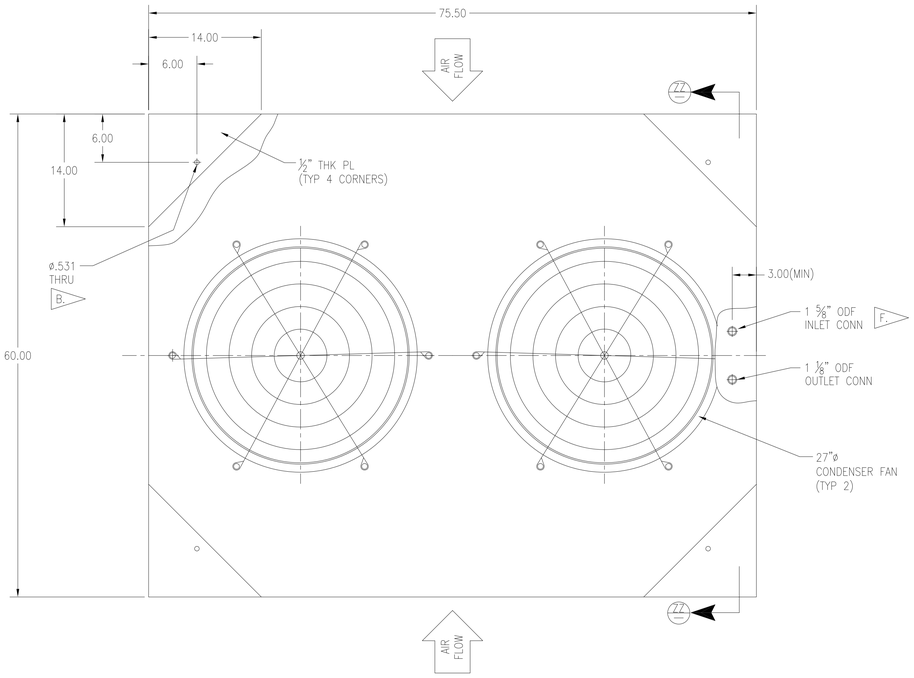

TOP VIEW

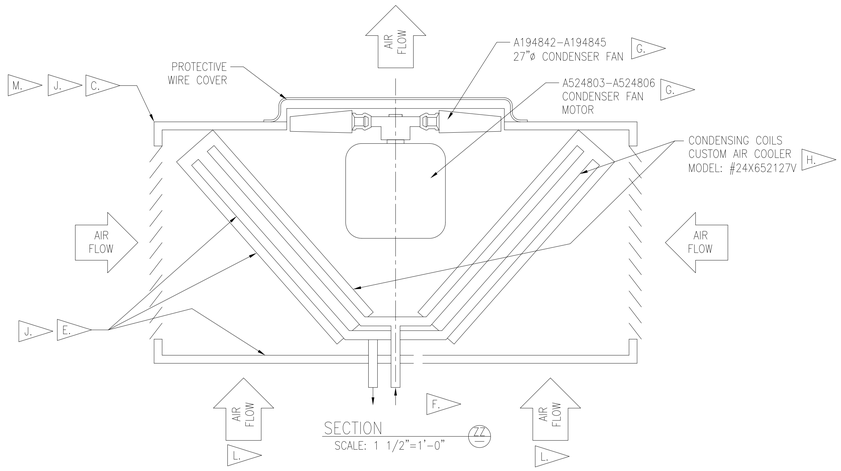

SECTION
SCALE: 1 1/2"=1'-0"

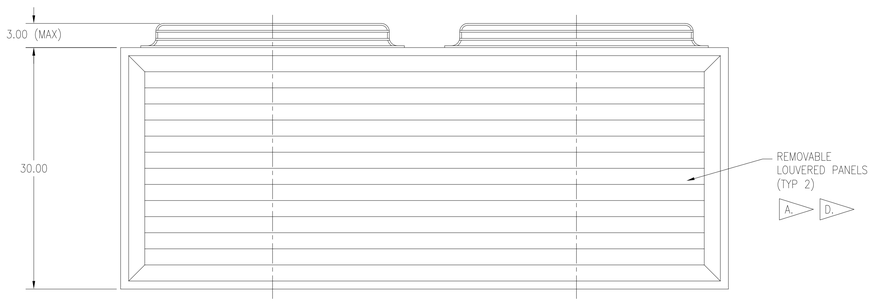

FRONT VIEW

CONDENSER ASSEMBLY

SCALE: 1 1/2"=1'-0"

(REFRIGERATION SPEC 11820)

(1) REQ'D AS SHOWN A524801

(1) REQ'D OPPOSITE HAND A524802

MANUFACTURER: CUSTOM AIR COOLERS H.
QUOTATION: 084953

SPECIFIC NOTES:

A. LOUVERS TO BE: 6061-T6 ALUMINUM FRAME & BLADES, .061 THICK W/ EXPANDED ALUMINUM SCREEN .060 THICK (TYP). MOUNT WITH 1/4-20x1-1/4 HEX HEAD BOLT, STAINLESS STEEL. MATCH DRILL AT ASSEMBLY.

B. MATCH DRILL AT ASSEMBLY WITH EXIST MOUNTING GUSSETS IN STRUCTURAL FRAME.

C. CASING & STRUCTURE TO BE PAINTED WHITE AS PER GENERAL NOTES IN SHEET V-1A.

D. ATTACH ALL PANELS & LOUVERS WITH 1/4-20x1-1/4 HEX HD BOLT, STAINLESS STEEL WITH FLAT AND LOCK WASHERS.

E. STRUCTURE SUPPORTS, MANIFOLDS & PIPING DETAILS PER VENDOR IN ACCORDANCE WITH SPEC SECTION 11820.

F. CONDENSER COILS & INLET TUBING SHALL BE JOINED BY A COMMON HEADER.

G. FAN & MOTOR SELECTION SHALL BE CAPABLE OF VARIABLE SPEED CONTROL TO MAINTAIN CONSTANT PRESSURE & OUTLET CONDITIONS FOR THE GIVEN BOUNDARY PERFORMANCE CONDITIONS.

H. OR ENGINEER APPROVED EQUAL.

J. STRUCTURE (INCLUDING COIL FRAME) TO BE FABRICATED FROM ALUMINUM.

K. COIL (INCLUDING CASING) SHALL BE DIP COATED WITH FLEXIBLE POLYMER E-COAT WITH DRY FILM THICKNESS OF .6-1.2 MILS THK ON ALL SURFACES, WITH UV RESISTANT URETHANE MASTIC TOPCOAT.

L. BOTTOM OF CONDENSER TO BE OPEN TO PERMIT FREE AIRFLOW.

M. PROVIDE LIFTING LUGS FOR INSTALLATION.

N. TUBE SIDE DESIGN PRESSURE: 550 PSIG.

UNIT PERFORMANCE G.							
CONDITION	REFRIGERANT	AIRFLOW	FLUID PRESSURE	INLET FLUID TEMP	CONDENSING TEMP	SUBCOOLING	CAPACITY
SUMMER (MAXIMUM)	R410A	11432 ACFM 95°F INLET	460 psia	195°F	125°F	10°F	503 MBH
WINTER (MINIMUM)	R410A	567 ACFM 30°F INLET	460 psia	195°F	125°F	10°F	74.5 MBH

COIL GEOMETRY (2 PER ASSY) K.			
TUBES	FINS	CONNECTIONS	CASING
⅜" COPPER, .016" THK RIFLED INTERIOR 24 ROWS HIGH, 5 ROWS DEEP, 10 CIRCUITS	.0055" THK AL, FLAT, 10 FINS PER INCH	1 5/8"ODF COPPER	.1" ALUMINUM WELDED

SYM	ZONE	DESCRIPTION	DATE	APPROVAL
REVISIONS				

SIGNATURES		DATE
DRAFTER	T. JOBE	05/06/11
CHECKER	D. MAY	05/06/11
ENGINEER	A. JACQUES	05/06/11
	R. WITHERSPOON	05/06/11
	R. FRANCO	05/06/11
SUBMITTED	T.O. ADAMS	05/06/11
APPROVED	E.A. THAXTON	05/06/11
TITLE		

NATIONAL AERONAUTICS AND SPACE ADMINISTRATION
JOHN F. KENNEDY SPACE CENTER, NASA
KENNEDY SPACE CENTER, FLORIDA

ASSEMBLY DRAWINGS

MPPU REFURBISHMENT DESIGN
ENVIRONMENTAL CONTROL SYSTEM
CONDENSER GEOMETRY

M-4B

SIZE F | DWG. NO. 584F0301001 | REV —

PROJ. NO. 95255 | SHEET | OF

P:\95255\DRAWINGS\MECH\M-4B.DWG 29-MAR-2011 10:04 JOBETL

EAR 99

FOR ANY PURPOSE OTHER THAN IN CONNECTION WITH A DEFINITELY RELATED GOVERNMENT PROCUREMENT OPERATION, THE UNITED STATES GOVERNMENT THEREBY INCURS NO RESPONSIBILITY NOR ANY OBLIGATION WHATSOEVER; AND THE FACT THAT THE GOVERNMENT MAY HAVE FORMULATED, FURNISHED, OR IN ANY WAY SUPPLIED THE SAID DRAWINGS, SPECIFICATIONS OR ANY OTHER DATA IS NOT TO BE REGARDED BY IMPLICATION OR OTHERWISE IN ANY MANNER LICENSING THE HOLDER OR ANY OTHER PERSONS OR CORPORATION, OR CONVEYING ANY RIGHTS OR PERMISSION TO MANUFACTURE, USE, OR SELL ANY PATENTED INVENTION THAT IN ANY WAY BE RELATED THERETO.

EAR 99 - NO LICENSE REQUIRED

The Information contained in this document is technical in content, but not technical data as defined by the International Traffic in Arms (ITAR) or the Export Administration Regulations (EAR), and therefore is EAR 99 NLR, no license required, suitable for public release. (General Prohibition Six (Embargo) applies to all items subject to the EAR, i.e. items on the CCL and within EAR 99 NLR. You may not make an export or reexport contrary to the prohibitions of part 746 (Embargos and Other Special Controls) of the EAR and 22 CFR part 126.1 of the ITAR).

EDDR # 113043 : NASA KSC Export Control Office (321- 867-9209)

EAR 99

SPECIFIC NOTES:

A. TRANSFER DRILL HOLES THROUGH LOUVER FLANGE TO STEEL FRAME (NOT STRUCTURAL TUBE). HOLES SHALL BE EQUALLY SPACED ON 12" CENTERS ALL AROUND.

B. ¼" THICK 6061-T6 ALUM SHEET ASTM B209. TRANSFER DRILL HOLES THROUGH ALUMINUM SHEET TO STEEL FRAME (NOT STRUCTURAL TUBE). HOLES SHALL BE EQUALLY SPACED ON 6" CENTERS ALL AROUND.

C. PROVIDE ACCESS PANELS FOR FLOW CONTROL VALVES (A524783, A524782 AND A524781).

D. PROVIDE ⅛" THICK NEOPRENE RUBBER GASKET, 50 DUROMETER BETWEEN ALUMINUM AND STEEL FRAME.

E. ATTACH ALL EXTERIOR PANELS AND LOUVERS WITH 1/4-20x1-1/4 HEX HD BOLTS, STAINLESS STEEL W/ FLAT AND LOCK WASHERS.

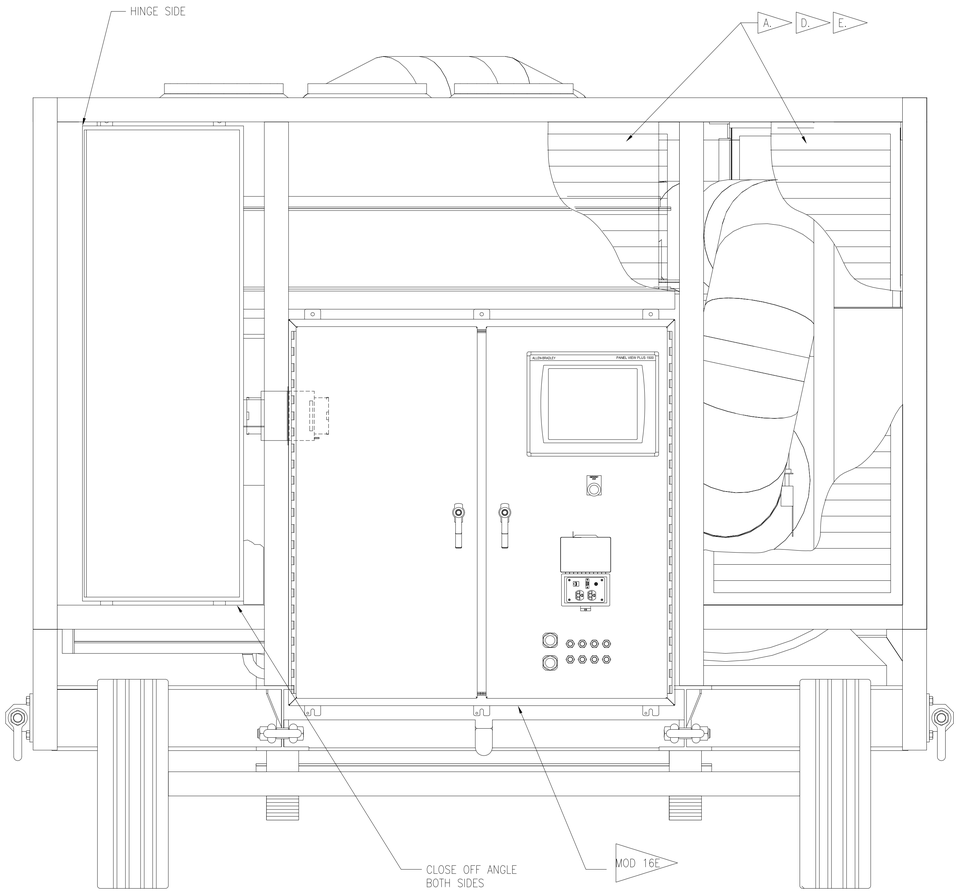

REAR VIEW (C, M-2)
SCALE: 1 1/2"=1'-0"

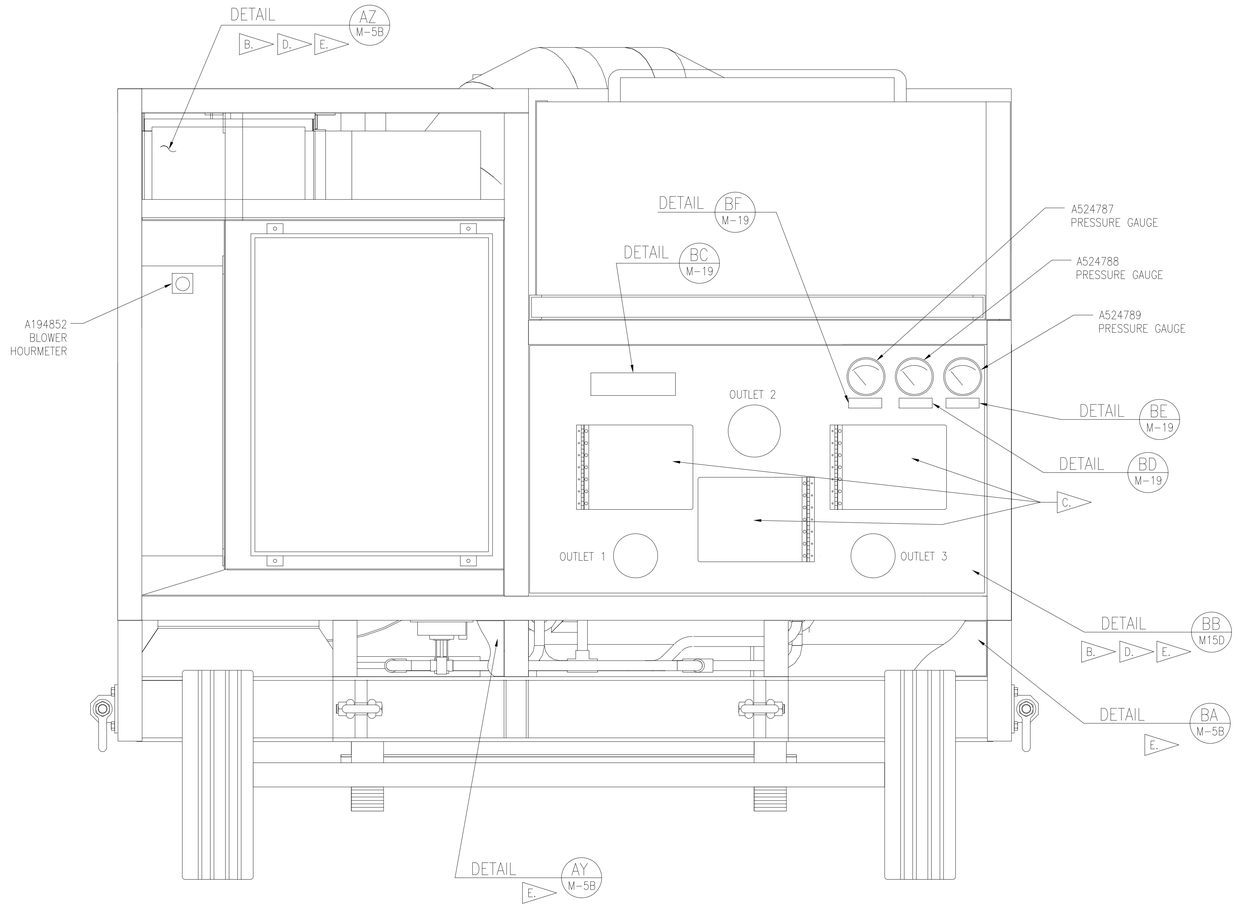

FRONT VIEW (D, M-2)
SCALE: 1 1/2"=1'-0"

6 0 12 24
SCALE: 1 1/2" = 1'

SYM	ZONE	DESCRIPTION	DATE	APPROVAL
		REVISIONS		

SIGNATURES		DATE
DRAFTER	T. JOBE	05/06/11
CHECKER	D. MAY	05/06/11
ENGINEER	A. JACQUES	05/06/11
	R. WITHERSPOON	05/06/11
	R. FRANCO	05/06/11
SUBMITTED	T.O. ADAMS	05/06/11
APPROVED	E.A. THAXTON	05/06/11

NATIONAL AERONAUTICS AND SPACE ADMINISTRATION
JOHN F. KENNEDY SPACE CENTER, NASA
KENNEDY SPACE CENTER, FLORIDA

ASSEMBLY DRAWINGS
MPPU REFURBISHMENT DESIGN
ENVIRONMENTAL CONTROL SYSTEM
END VIEWS

TITLE

SIZE F | DWG. NO. 584F0301001 | REV –

PROJ. NO. 95255 | SHEET | OF

M-5

P:\95255\DRAWINGS\MECH\M-5.DWG | 22-FEB-2011 16:14 | JOBETL

KSC FORM 1-11 (REV. 3/76) (C/G 3/93)

EAR 99

FOR ANY PURPOSE OTHER THAN IN CONNECTION WITH A DEFINITELY RELATED GOVERNMENT PROCUREMENT OPERATION, THE UNITED STATES GOVERNMENT THEREBY INCURS NO RESPONSIBILITY NOR ANY OBLIGATION WHATSOEVER; AND THE FACT THAT THE GOVERNMENT MAY HAVE FORMULATED, FURNISHED, OR IN ANY WAY SUPPLIED THE SAID DRAWINGS, SPECIFICATIONS OR ANY OTHER DATA IS NOT TO BE REGARDED BY IMPLICATION OR OTHERWISE IN ANY MANNER LICENSING THE HOLDER OR ANY OTHER PERSONS OR CORPORATION, OR CONVEYING ANY RIGHTS OR PERMISSION TO MANUFACTURE, USE, OR SELL ANY PATENTED INVENTION THAT IN ANY WAY BE RELATED THERETO.

EAR 99 – NO LICENSE REQUIRED

The Information contained in this drawing is technical in content, but not technical data as defined by the International Traffic in Arms (ITAR) or the Export Administration Regulations (EAR), and therefore is EAR 99 NLR, no export license required, suitable for public release. (General Prohibition Six (Embargo) applies to all items subject to the EAR, i.e. items on the CCL and within EAR 99 NLR. You may not make an export or reexport contrary to the provisions of part 746 (Embargos and Other Special Controls) of the EAR and 22 CFR part 126.1 of the ITAR).

EDDR # 113043 : NASA KSC Export Control Office (321- 867-9209)

SPECIFIC NOTES:

A. MATERIAL: 0.125 ALUMINUM ALLOY 5052-H32.

B. PREPARE AND PAINT ALL SURFACES PER GENERAL NOTES IN SHEET V-1A

C. REMOVE ALL BURRS AND BREAK ALL SHARP EDGES.

D. TOLERANCE ON HOLE PATTERNS TO BE +/- .010 FOR REPEATABILITY.

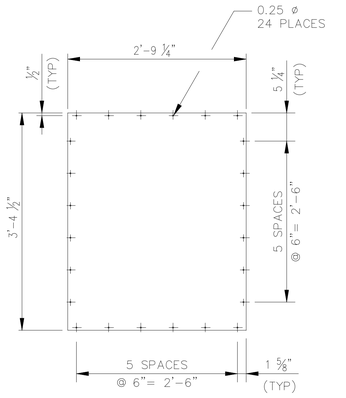

DETAIL SCALE: 1"=1'-0" (VH/V-4) (AJ/M-4) A B

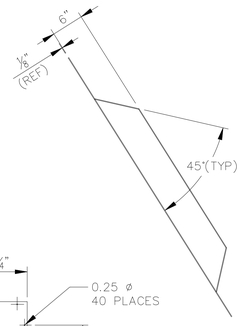

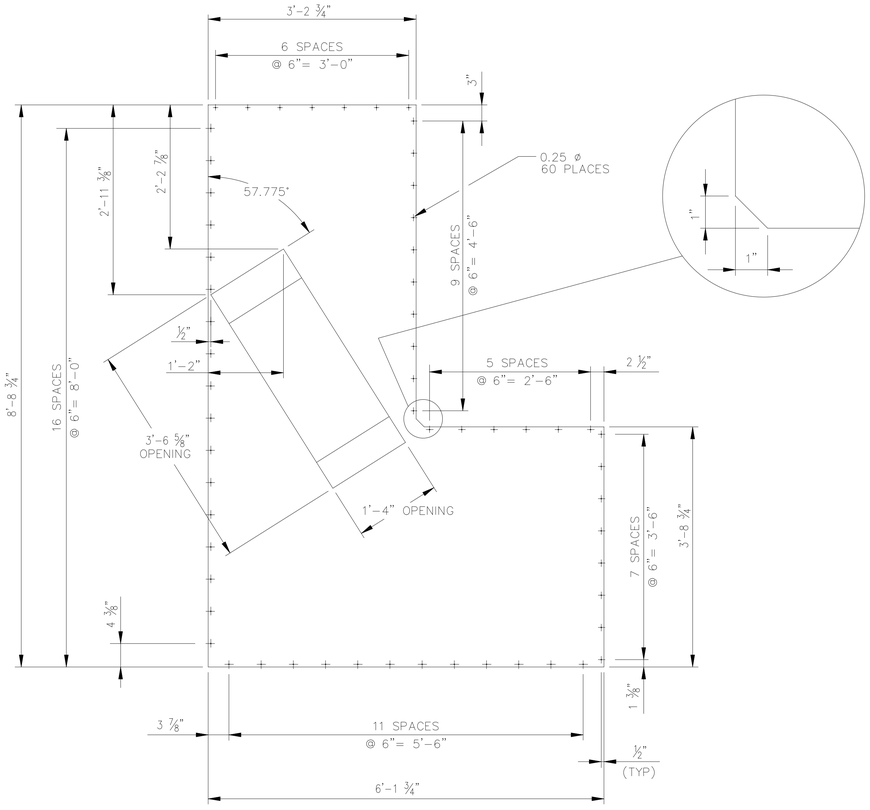

DETAIL SCALE: 1"=1'-0" (M/M-2) A B

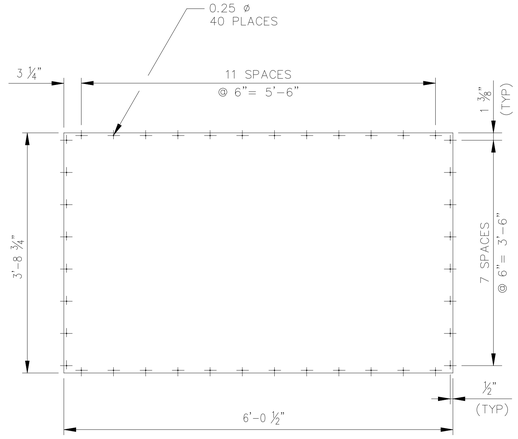

DETAIL SCALE: 1"=1'-0" (N/M-2) A B

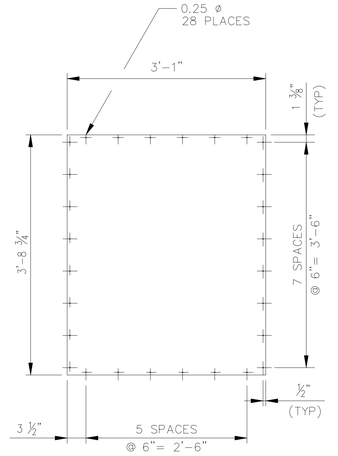

DETAIL SCALE: 1"=1'-0" (L/M-2) A B

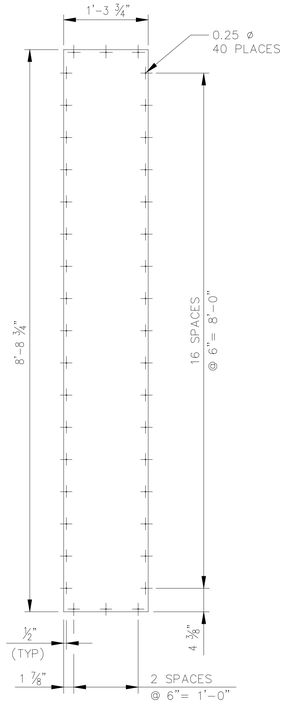

DETAIL SCALE: 1"=1'-0" (P/M-2) A B

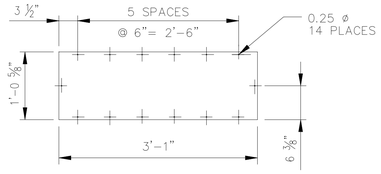

DETAIL SCALE: 1"=1'-0" (AH/M-3) A B

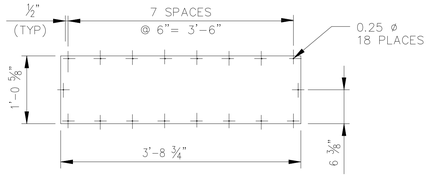

DETAIL SCALE: 1"=1'-0" (AZ/M-5) A B

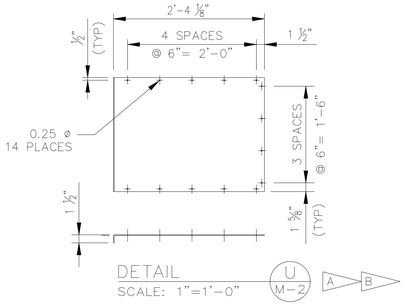

DETAIL SCALE: 1"=1'-0" (U/M-2) A B

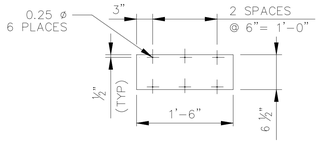

DETAIL SCALE: 1"=1'-0" (AY/M-5) A B

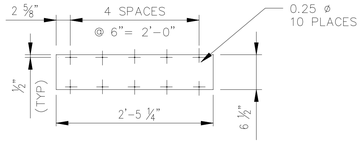

DETAIL SCALE: 1"=1'-0" (BA/M-5) A B

THIS SHEET IS REFERENCE ONLY COPIED FROM 80K57281

2' 0 2' 4'
SCALE: 1/2"=1' 0"

1' 0 1' 2'
SCALE: 1"=1' 0"

SYM	ZONE	DESCRIPTION	DATE	APPROVAL
		REVISIONS		

SIGNATURES		DATE
DRAFTER	T. JOBE	05/06/11
CHECKER	D. MAY	05/06/11
ENGINEER	A. JACQUES	05/06/11
	R. WITHERSPOON	05/06/11
	R. FRANCO	05/06/11
SUBMITTED	T.O. ADAMS	05/06/11
APPROVED	E.A. THAXTON	05/06/11

NATIONAL AERONAUTICS AND SPACE ADMINISTRATION
JOHN F. KENNEDY SPACE CENTER, NASA
KENNEDY SPACE CENTER, FLORIDA

ASSEMBLY DRAWINGS

MPPU REFURBISHMENT DESIGN
ENVIRONMENTAL CONTROL SYSTEM
FLAT PANEL DETAILS

TITLE

SIZE F | DWG. NO. 584F0301001 | REV —

PROJ. NO. 95255 | SHEET | OF

M-5B

P:\95255\DRAWINGS\MECH\M-58.DWG 23-FEB-2011 08:13 JOBETL

KSC FORM 1-11 (REV. 3/76) (C/G 3/93)

FOR ANY PURPOSE OTHER THAN IN CONNECTION WITH A DEFINITELY RELATED GOVERNMENT PROCUREMENT OPERATION, THE UNITED STATES GOVERNMENT THEREBY INCURS NO RESPONSIBILITY NOR ANY OBLIGATION WHATSOEVER; AND THE FACT THAT THE GOVERNMENT MAY HAVE FORMULATED, FURNISHED, OR IN ANY WAY SUPPLIED THE SAID DRAWINGS, SPECIFICATIONS OR ANY OTHER DATA IS NOT TO BE REGARDED BY IMPLICATION OR OTHERWISE IN ANY MANNER LICENSING THE HOLDER OR ANY OTHER PERSONS OR CORPORATION, OR CONVEYING ANY RIGHTS OR PERMISSION TO MANUFACTURE, USE, OR SELL ANY PATENTED INVENTION THAT IN ANY WAY BE RELATED THERETO.

EAR 99 – NO LICENSE REQUIRED

The Information contained in this document is technical in content, but not technical data as defined by the International Traffic in Arms (ITAR) or the Export Administration Regulations (EAR), and therefore is EAR 99 NLR, meaning no license required, suitable for public release. (General Prohibition Six (Embargo) applies to all items subject to the EAR, i.e. items on the CCL and within EAR 99 NLR. You may not make an export or reexport contrary to the provisions of part 746 (Embargos and Other Special Controls) of the EAR and 22 CFR part 126.1 of the ITAR).

EDDR # 113043 : NASA KSC Export Control Office (321- 867-9209)

SPECIFIC NOTES:

A. LOCATE ℄ OF BLOWER INLET IN ORDER TO ALLOW INLET DUCT TO CLEAR PLC PIPE.

B. HEAD OF SHOULDER BOLT SHALL NOT CLAMP DOWN ONTO GUIDE.

C. SUPPORT FROM STRUCTURAL FLANGES PROVIDED ON MPPU FRAMING.

D. INSULATE OUTLET DUCTS WITH 1" THICK INSULATION & PVC COVER (AP ARMAFLEX INSULATION WITH CEEL-CO 550 PVC CUT & CURLED JACKETING, 30 MIL THICK.) INSTALL USING 520 ADHESIVE

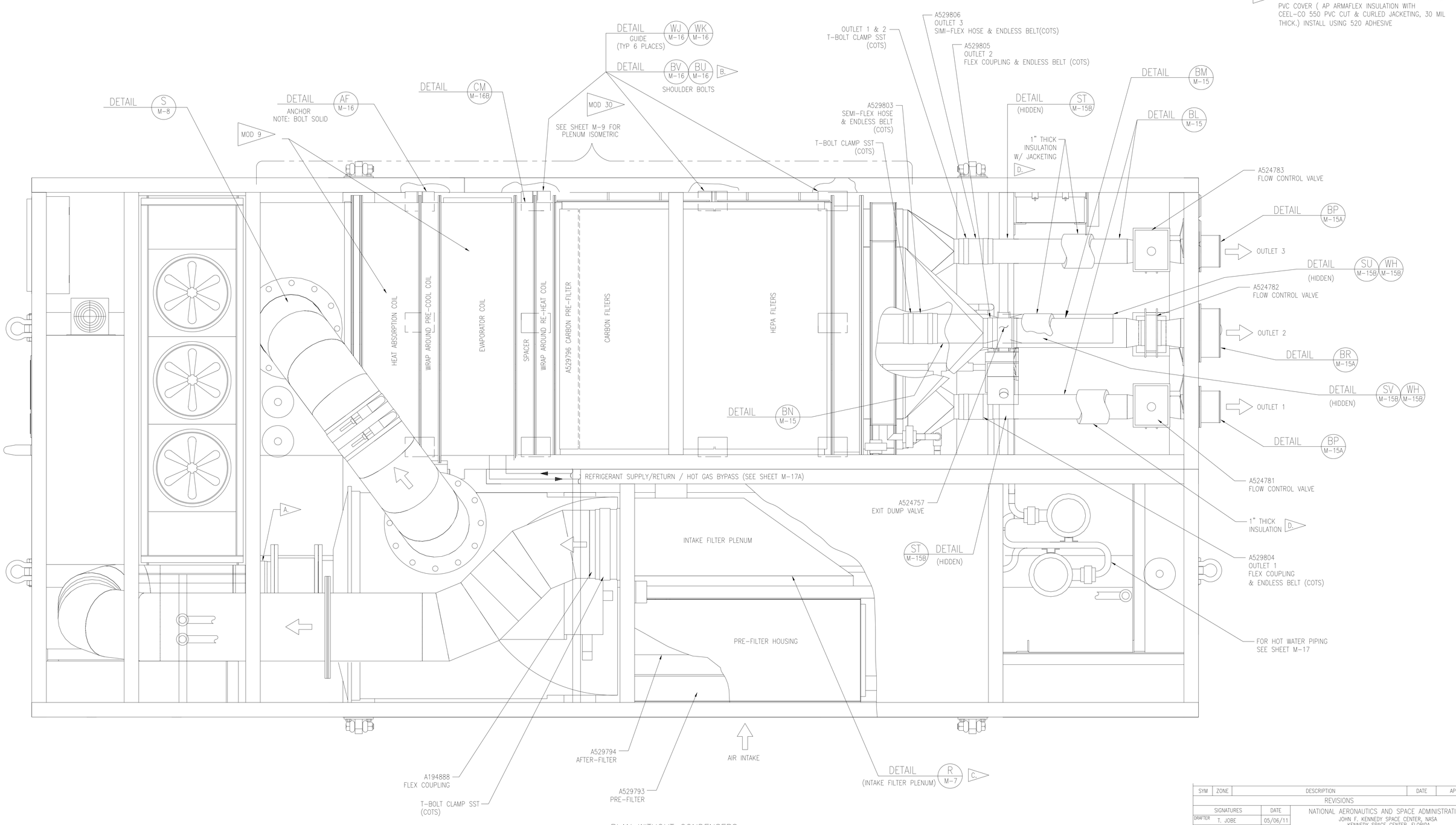

PLAN WITHOUT CONDENSERS
SCALE: 1 1/2"=1'-0"

6 0 12 24
SCALE: 1 ?" = 1'

SYM	ZONE	DESCRIPTION	DATE	APPROVAL
		REVISIONS		

SIGNATURES		DATE
DRAFTER	T. JOBE	05/06/11
CHECKER	D. MAY	05/06/11
ENGINEER	A. JACQUES	05/06/11
	R. WITHERSPOON	05/06/11
	R. FRANCO	05/06/11
SUBMITTED	T.O. ADAMS	05/06/11
APPROVED	E.A. THAXTON	05/06/11

NATIONAL AERONAUTICS AND SPACE ADMINISTRATION
JOHN F. KENNEDY SPACE CENTER, NASA
KENNEDY SPACE CENTER, FLORIDA

ASSEMBLY DRAWINGS

MPPU REFURBISHMENT DESIGN
ENVIRONMENTAL CONTROL SYSTEM
PLAN VIEW WITHOUT CONDENSERS

TITLE

SIZE F | DWG. NO. 584F0301001 | REV –

PROJ. NO. 95255 | SHEET | OF

M-6

P:\95255\DRAWINGS\MECH\M-6.DWG 09-MAY-2011 10:00 JOBETL

KSC FORM 1-11 (REV. 3/76) (C/G 3/93)

FOR ANY PURPOSE OTHER THAN IN CONNECTION WITH A DEFINITELY RELATED GOVERNMENT PROCUREMENT OPERATION, THE UNITED STATES GOVERNMENT THEREBY INCURS NO RESPONSIBILITY NOR ANY OBLIGATION WHATSOEVER; AND THE FACT THAT THE GOVERNMENT MAY HAVE FORMULATED, FURNISHED, OR IN ANY WAY SUPPLIED THE SAID DRAWINGS, SPECIFICATIONS OR ANY OTHER DATA IS NOT TO BE REGARDED BY IMPLICATION OR OTHERWISE IN ANY MANNER LICENSING THE HOLDER OR ANY OTHER PERSONS OR CORPORATION, OR CONVEYING ANY RIGHTS OR PERMISSION TO MANUFACTURE, USE, OR SELL ANY PATENTED INVENTION THAT IN ANY WAY BE RELATED THERETO.

EAR 99 - NO LICENSE REQUIRED

This information contained in the document is technical in content, but not technical data as defined by the International Traffic in Arms Regulations (ITAR) or the Export Administration Regulations (EAR), and therefore is EAR 99 NLR, no export license required, suitable for public release. (General Prohibition Six (Embargo) applies to all items subject to the EAR, i.e. items on the CCL and within EAR 99 NLR. You may not make an export or reexport contrary to the provisions of part 746 (Embargos and Other Special Controls) of the EAR and 22 CFR part 126.1 of the ITAR).

EDDR # 113043 - NASA KSC Export Control Office (321- 867-6009)

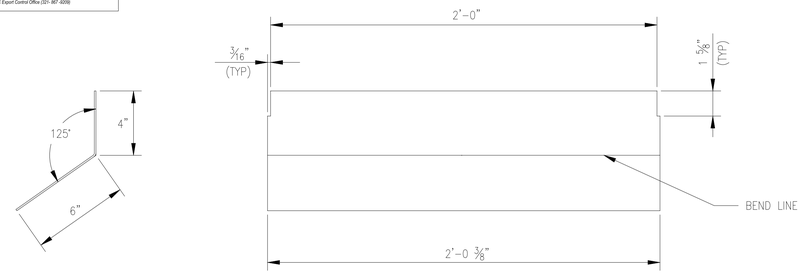

DETAIL BV
SCALE: 3"=1'-0"

MAT'L: .125 ALUM 6061-T6
(ONE PER UNIT)

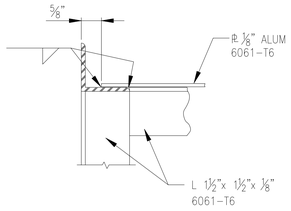

SECTION BZ
SCALE: 6"=1'-0"

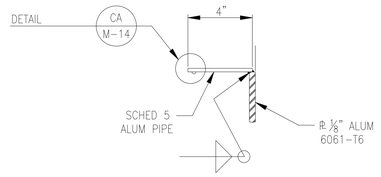

DETAIL BW
SCALE: 3"=1'-0"

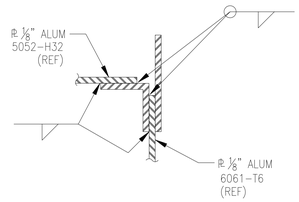

SECTION BY
SCALE: 6"=1'-0"

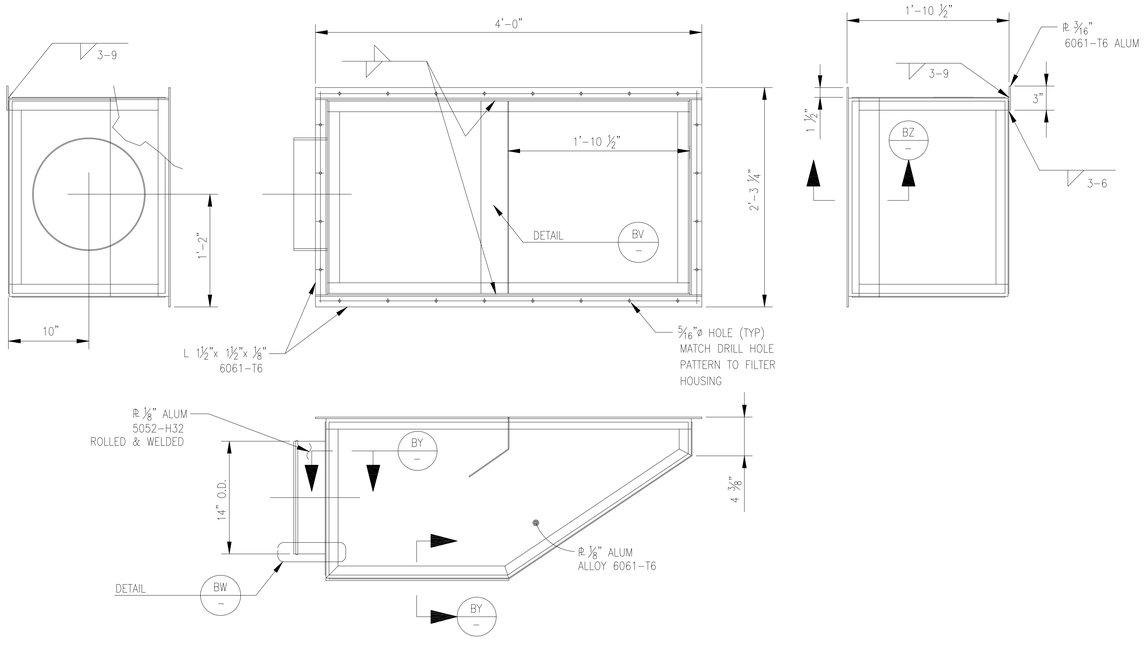

INTAKE FILTER PLENUM R M-6
SCALE: 1 1/2"=1'-0"

THIS SHEET IS REFERENCE ONLY COPIED FROM 80K57281

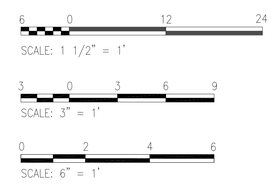

SYM	ZONE	DESCRIPTION	DATE	APPROVAL

REVISIONS

SIGNATURES	DATE
DRAFTER	
CHECKER	
ENGINEER	
SUBMITTED	
APPROVED	DATE
TITLE	

NATIONAL AERONAUTICS AND SPACE ADMINISTRATION
JOHN F. KENNEDY SPACE CENTER, NASA
KENNEDY SPACE CENTER, FLORIDA

ASSEMBLY DRAWINGS
MPPU REFURBISHMENT DESIGN
ENVIRONMENTAL CONTROL SYSTEM
INTAKE FILTER PLENUM

SIZE F | DWG. NO. 584F0301001 | REV –
PROJ. NO. 95255 | SHEET OF

M-7

KSC FORM 1-11 (REV. 3/76) (C/G 3/93) P:\95255\DRAWINGS\MECH\M-7.DWG 27-JAN-2011 13:18 JOBETL

FOR ANY PURPOSE OTHER THAN IN CONNECTION WITH A DEFINITELY RELATED GOVERNMENT PROCUREMENT OPERATION, THE UNITED STATES GOVERNMENT THEREBY INCURS NO RESPONSIBILITY NOR ANY OBLIGATION WHATSOEVER; AND THE FACT THAT THE GOVERNMENT MAY HAVE FORMULATED, FURNISHED, OR IN ANY WAY SUPPLIED THE SAID DRAWINGS, SPECIFICATIONS OR ANY OTHER DATA IS NOT TO BE REGARDED BY IMPLICATION OR OTHERWISE IN ANY MANNER LICENSING THE HOLDER OR ANY OTHER PERSONS OR CORPORATION, OR CONVEYING ANY RIGHTS OR PERMISSION TO MANUFACTURE, USE, OR SELL ANY PATENTED INVENTION THAT IN ANY WAY BE RELATED THERETO.

EAR 99 – NO LICENSE REQUIRED

The information contained in this document is technical in content, but not technical data as defined by the International Traffic in Arms (ITAR) or the Export Administration Regulations (EAR), and therefore is EAR 99 NLR, meaning no license required, suitable for public release. (General Prohibition Six (Embargo) applies to all items subject to the EAR, i.e. items on the CCL and within EAR 99 NLR. You may not make an export or reexport contrary to the provisions of part 746 (Embargos and Other Special Controls) of the EAR and 22 CFR part 126.1 of the ITAR).

EDDR # 113043 : NASA KSC Export Control Office (321- 867-9209)

SPECIFIC NOTES:

A. FIELD VERIFY DIMENSION PRIOR TO FABRICATION. ADJUST AS REQUIRED.

B. PREPARE AND PAINT IN ACCORDANCE TO GENERAL NOTES IN SHEET V–1A

C. LOCATE FLANGE TO CLEAR ADJACENT COMPONENTS.

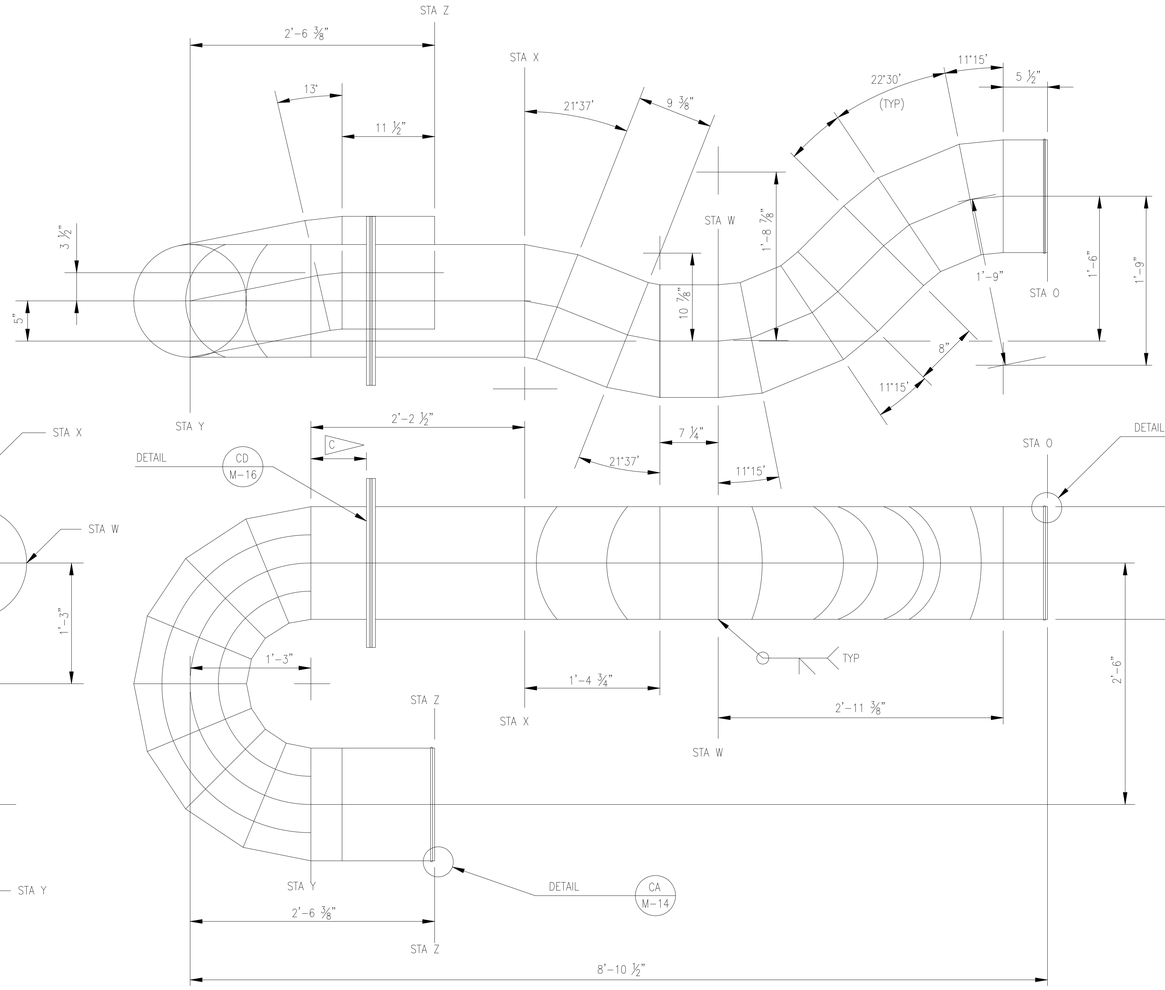

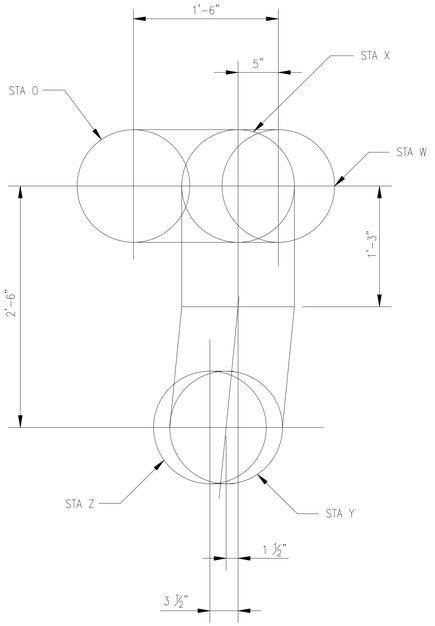

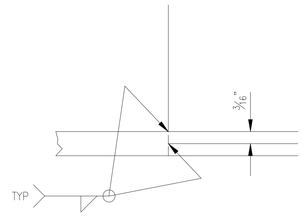

DETAIL CB – SCALE: 12"=1'–0"

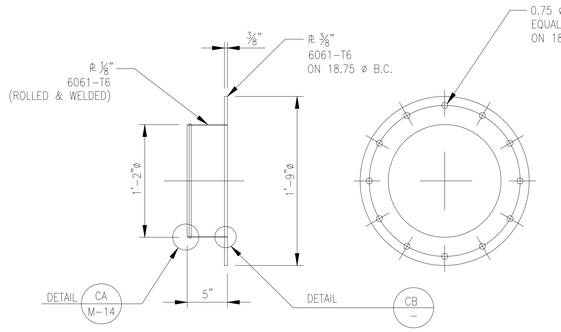

DETAIL SS M–3 SCALE: 1 1/2"=1'–0"

QTY: ONE PER UNIT

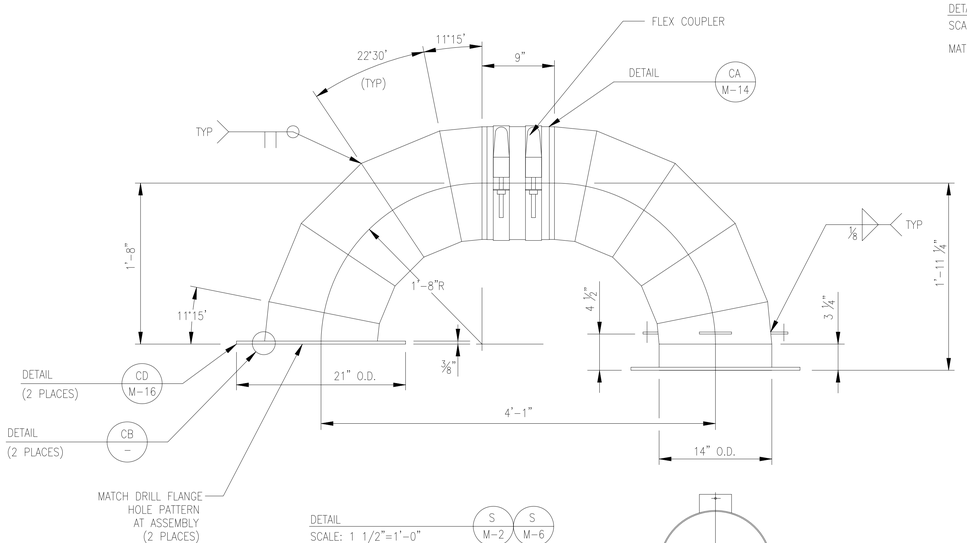

DETAIL T M–2 / T M–2A SCALE: 1 1/2"=1'–0"

MAT'L: .125 ALUM 6061–T6 ROLLED AND WELDED

DETAIL S M–2 / S M–6 SCALE: 1 1/2"=1'–0"

MAT'L: .125 ALUM 6061–T6 ROLLED AND WELDED

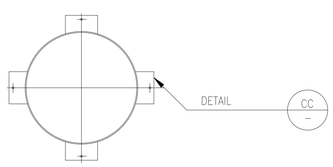

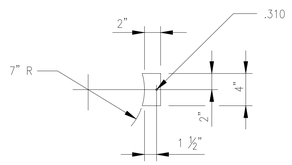

DETAIL CC – SCALE: 1 1/2"=1'–0"

MAT'L: .25 ALUM 5052–H32

QTY: 4 PER UNIT

1 0 1 2 3 SCALE: 3/4" = 1'

6 0 12 24 SCALE: 1 1/2" = 1'

THIS SHEET IS REFERENCE ONLY COPIED FROM 80K57281

SYM	ZONE	DESCRIPTION	DATE	APPROVAL

REVISIONS

SIGNATURES	DATE
DRAFTER	
CHECKER	
ENGINEER	
SUBMITTED	
APPROVED	DATE

NATIONAL AERONAUTICS AND SPACE ADMINISTRATION
JOHN F. KENNEDY SPACE CENTER, NASA
KENNEDY SPACE CENTER, FLORIDA

ASSEMBLY DRAWINGS

MPPU REFURBISHMENT DESIGN
ENVIRONMENTAL CONTROL SYSTEM
DUCT DETAILS

TITLE

SIZE F | DWG. NO. 584F0301001 | REV –

PROJ. NO. 95255 | SHEET | OF

M–8

P:\95255\DRAWINGS\MECH\M–8.DWG 27–JAN–2011 14:17 JOBETL

KSC FORM 1–11 (REV. 3/76) (C/G 3/93)

FOR ANY PURPOSE OTHER THAN IN CONNECTION WITH A DEFINITELY RELATED GOVERNMENT PROCUREMENT OPERATION, THE UNITED STATES GOVERNMENT THEREBY INCURS NO RESPONSIBILITY NOR ANY OBLIGATION WHATSOEVER; AND THE FACT THAT THE GOVERNMENT MAY HAVE FORMULATED, FURNISHED, OR IN ANY WAY SUPPLIED THE SAID DRAWINGS, SPECIFICATIONS OR ANY OTHER DATA IS NOT TO BE REGARDED BY IMPLICATION OR OTHERWISE IN ANY MANNER LICENSING THE HOLDER OR ANY OTHER PERSONS OR CORPORATION, OR CONVEYING ANY RIGHTS OR PERMISSION TO MANUFACTURE, USE, OR SELL ANY PATENTED INVENTION THAT IN ANY WAY BE RELATED THERETO.

EAR 99 – NO LICENSE REQUIRED

The information contained in this document is technical in content, but not technical data as defined by the International Traffic in Arms (ITAR) or the Export Administration Regulations (EAR), and therefore is EAR 99 NLR, meaning no license required, suitable for public release. (General Prohibition Six (Embargo) applies to all items subject to the EAR, i.e. items on the CCL and within EAR 99 NLR. You may not make an export or reexport contrary to the provisions of part 746 (Embargos and Other Special Controls) of the EAR and 22 CFR part 126.1 of the ITAR).

EDDR # 113043 : NASA KSC Export Control Office (321- 867-9209)

EAR 99

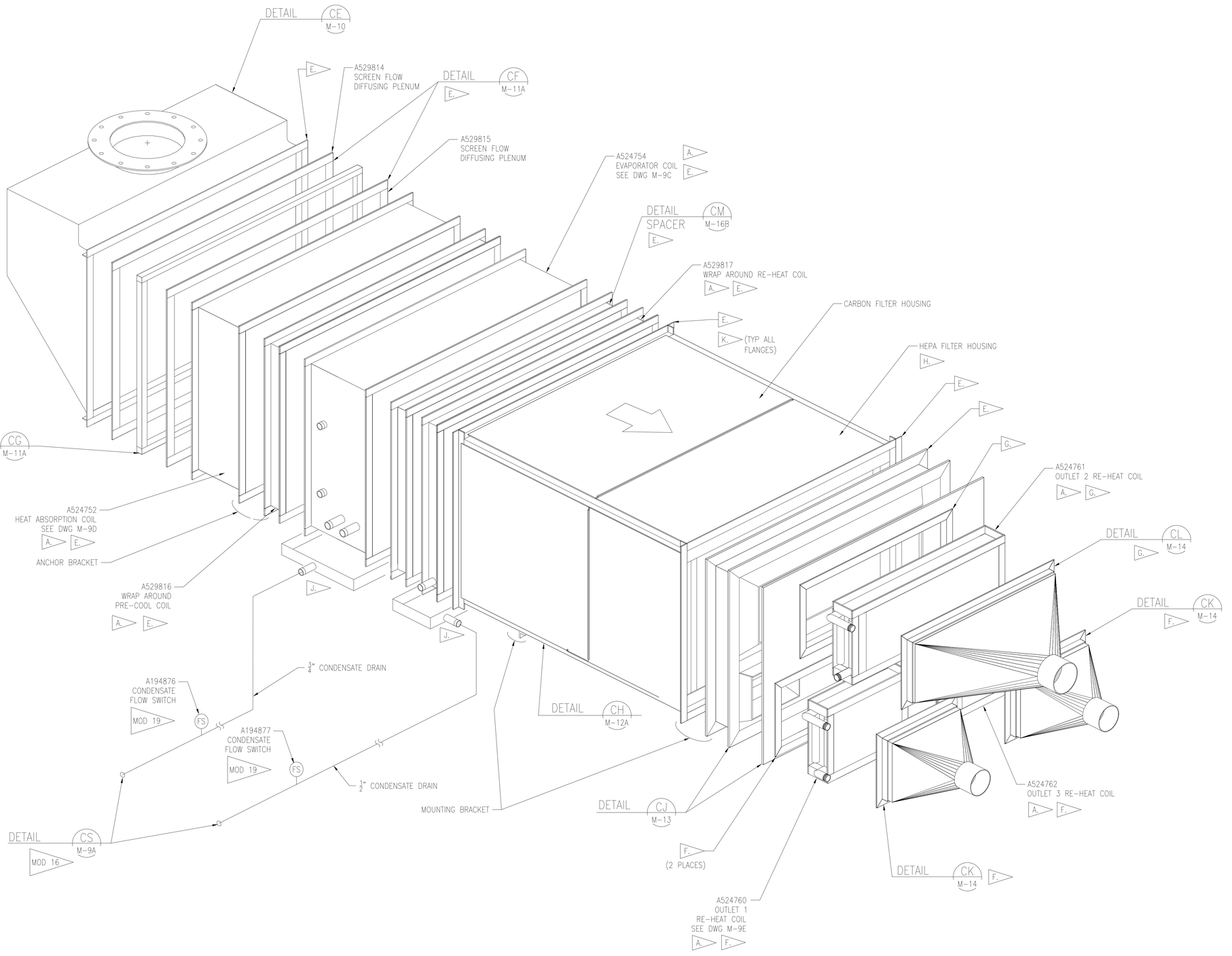

PLENUM ISOMETRIC
SCALE: NONE

MOD 10D MOD 29 MOD 30 MOD 31

SPECIFICS NOTES:

A. SEE ~~SHEET~~ M-20 FOR EQUIPMENT SCHEDULES.

B. INSTALL 1/8" THICK SILICONE RUBBER GASKET, 40 DUROMETER, EACH BOLTED FLANGE SURFACE. COMPRESS GASKETS TO 1/16" THROUGH BOLTING OF FASTENERS.

C. DUCTWORK EXCEPT INLET PLENUM SHALL BE INSULATED WITH 1" THICK INSULATION (AP ARMAFLEX INSULATION INSTALLED USING 520 ADHESIVE AND WB ARMAFLEX FINISH).

D. ADHERE GASKET USING GE-162 SILICONE CAULK.

E. DRILL TEMPLATE, DETAIL CN M-9B

F. DRILL TEMPLATE, DETAIL CP M-9B

G. DRILL TEMPLATE, DETAIL CR M-9B

H. INSTALL HEPA FILTER DIFFERENTIAL PRESSURE TAPS TO BOTTOM OR OUTBOARD SIDE OF FILTER HOUSING.

J. CONDENSATE PANS SHOWN FOR ILLUSTRATION ONLY. ACTUAL DRAIN PANS ARE HOUSED WITHIN THE COIL CASING.

K. FLANGE FACES SHALL BE PLANAR WITHIN 1/16"PRIOR TO ASSEMBLY.

SYM	ZONE	DESCRIPTION	DATE	APPROVAL
		REVISIONS		

SIGNATURES		DATE
DRAFTER	T. JOBE	05/06/11
CHECKER	D. MAY	05/06/11
ENGINEER	A. JACQUES	05/06/11
	R. WITHERSPOON	05/06/11
	R. FRANCO	05/06/11
SUBMITTED	T.O. ADAMS	05/06/11
APPROVED	E.A. THAXTON	05/06/11

NATIONAL AERONAUTICS AND SPACE ADMINISTRATION
JOHN F. KENNEDY SPACE CENTER, NASA
KENNEDY SPACE CENTER, FLORIDA

ASSEMBLY DRAWINGS

MPPU REFURBISHMENT DESIGN
ENVIRONMENTAL CONTROL SYSTEM
PLENUM ISOMETRIC

SIZE F | DWG. NO. 584F0301001 | REV –

PROJ. NO. 95255 | SHEET | OF

TITLE

M-9

P:\95255\DRAWINGS\MECH\M-9.DWG 16-FEB-2011 13:12 JOBETL

EAR 99

KSC FORM 1-11 (REV. 3/76) (C/G 3/93)

FOR ANY PURPOSE OTHER THAN IN CONNECTION WITH A DEFINITELY RELATED GOVERNMENT PROCUREMENT OPERATION, THE UNITED STATES GOVERNMENT THEREBY INCURS NO RESPONSIBILITY NOR ANY OBLIGATION WHATSOEVER, AND THE FACT THAT THE GOVERNMENT MAY HAVE FORMULATED, FURNISHED, OR IN ANY WAY SUPPLIED THE SAID DRAWINGS, SPECIFICATIONS OR ANY OTHER DATA IS NOT TO BE REGARDED BY IMPLICATION OR OTHERWISE IN ANY MANNER LICENSING THE HOLDER OR ANY OTHER PERSONS OR CORPORATION, OR CONVEYING ANY RIGHTS OR PERMISSION TO MANUFACTURE, USE, OR SELL ANY PATENTED INVENTION THAT IN ANY WAY BE RELATED THERETO.

EAR 99 - NO LICENSE REQUIRED

The information contained in this document is technical in content, but not technical data as defined by the International Traffic in Arms Regulations (ITAR) or the Export Administration Regulations (EAR), and therefore is EAR 99 NLR, no export license required, suitable for public release. (General Prohibition Six (Embargo) applies to all items subject to the EAR, i.e. items on the CCL and within EAR 99 NLR. You may not make an export or reexport contrary to the provisions of part 746 (Embargos and Other Special Controls) of the EAR and 22 CFR part 126.1 of the ITAR).

EDDR # 113043 : NASA KSC Export Control Office (321-867-6209)

EAR 99

SPECIFIC NOTES:

A. ALL TUBING SHALL BE DRAWN, TYPE K COPPER IN ACCORDANCE WITH ASTM B88. CONNECTIONS SHALL BE SOLDERED OR NPT.

B. LOCATION OF TUBING BENDS, FINISHED LENGTH SHALL BE DETERMINED AT INSTALLATION.

C. TUBING SHALL TERMINATE FLUSH WITH EDGE OF MPPU, VISIBLE WHEN OPERATOR IS STANDING IN FRONT OF REFRIGERATION CONTROL UNIT.

D. DRAIN PANS SHOWN FOR ILLUSTRATION PURPOSES ONLY. ACTUAL DRAINS HOUSED WITHIN COIL CASINGS.

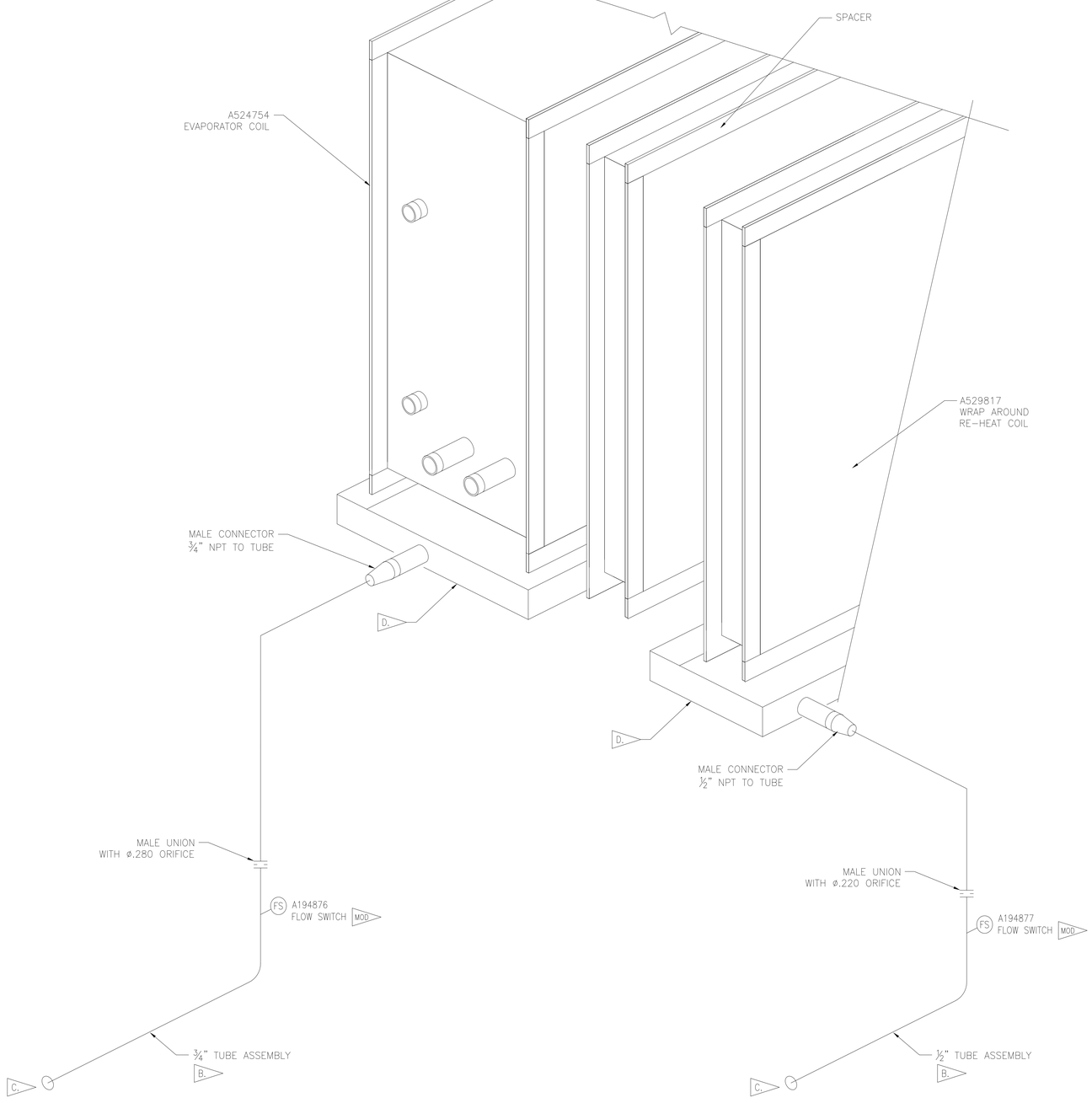

DETAIL CS M-9 MOD 16
SCALE: NONE

SYM	ZONE	DESCRIPTION	DATE	APPROVAL

REVISIONS

SIGNATURES		DATE
DRAFTER	T. JOBE	05/06/11
CHECKER	D. MAY	05/06/11
ENGINEER	A. JACQUES	05/06/11
	R. WITHERSPOON	05/06/11
	R. FRANCO	05/06/11
SUBMITTED	T.O. ADAMS	05/06/11
APPROVED	E.A. THAXTON	DATE 05/06/11
TITLE		

NATIONAL AERONAUTICS AND SPACE ADMINISTRATION
JOHN F. KENNEDY SPACE CENTER, NASA
KENNEDY SPACE CENTER, FLORIDA

ASSEMBLY DRAWINGS
MPPU REFURBISHMENT DESIGN
ENVIRONMENTAL CONTROL SYSTEM
CONDENSATE DRAIN ISOMETRIC

SIZE F | DWG. NO. 584F0301001 | REV –

PROJ. NO. 95255 | SHEET OF

M-9A

P:\95255\DRAWINGS\MECH\M-9A.DWG 10-MAR-2011 08:27 JOBETL

KSC FORM 1-11 (REV. 3/76) (C/G 3/93)

EAR 99

FOR ANY PURPOSE OTHER THAN IN CONNECTION WITH A DEFINITELY RELATED GOVERNMENT PROCUREMENT OPERATION, THE UNITED STATES GOVERNMENT THEREBY INCURS NO RESPONSIBILITY NOR ANY OBLIGATION WHATSOEVER, AND THE FACT THAT THE GOVERNMENT MAY HAVE FORMULATED, FURNISHED, OR IN ANY WAY SUPPLIED THE SAID DRAWINGS, SPECIFICATIONS OR ANY OTHER DATA IS NOT TO BE REGARDED BY IMPLICATION OR OTHERWISE IN ANY MANNER LICENSING THE HOLDER OR ANY OTHER PERSONS OR CORPORATION, OR CONVEYING ANY RIGHTS OR PERMISSION TO MANUFACTURE, USE, OR SELL ANY PATENTED INVENTION THAT IN ANY WAY BE RELATED THERETO.

EAR 99 - NO LICENSE REQUIRED

The information contained in the document is technical in content, but not technical data as defined by the International Traffic in Arms Regulations (ITAR) or the Export Administration Regulations (EAR), and therefore is EAR 99 NLR, no export license required, suitable for public release. (General Prohibition Six (Embargo) applies to all items subject to the EAR, i.e. items on the CCL and within EAR 99 NLR. You may not make an export or reexport contrary to the provisions of part 746 (Embargos and Other Special Controls) of the EAR and 22 CFR part 126.1 of the ITAR).

EDDR # 113043 - NASA KSC Export Control Office (321- 867-6009)

EAR 99

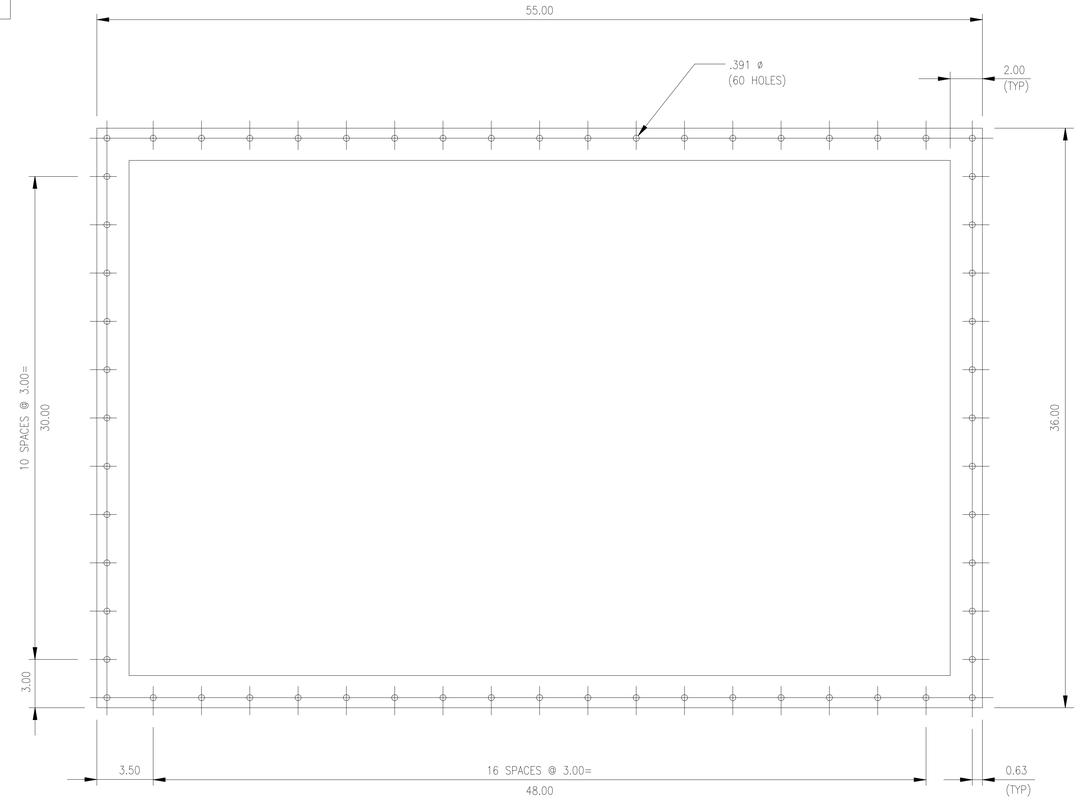

DETAIL CN M-9
SCALE: 3"=1'-0"

MAT'L: 16 GA GALV STL
USED TO MATCH DRILL
THE FOLLOWING PARTS:
1) ABSORPTION COIL
2) PRECOOL COIL
3) REHEAT COIL
4) DETAIL CE, SHT M-10
5) DETAIL DU SHT M-12A
6) DX COIL
7) DETAIL CM, SHT M-16B
8) DETAIL CF, SHT M-11A
9) DETAIL CJ, SHT M-13
10) DETAIL CG, SHT M-11A

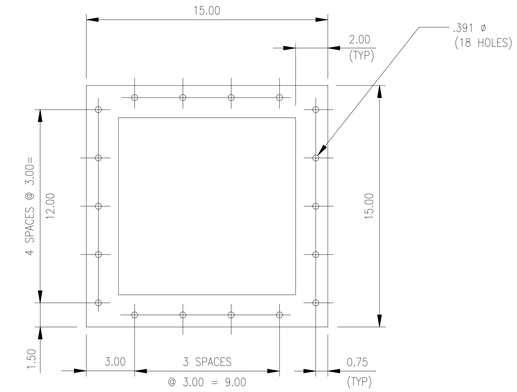

DETAIL CP M-9
SCALE: 3"=1'-0"

MAT'L: 16 GA GALV STL
USED TO MATCH DRILL
THE FOLLOWING PARTS:
1) FWD REHEAT COIL
2) AFT REHEAT COIL
3) DETAIL CJ, SHT M-13
4) DETAIL CK, SHT M-14

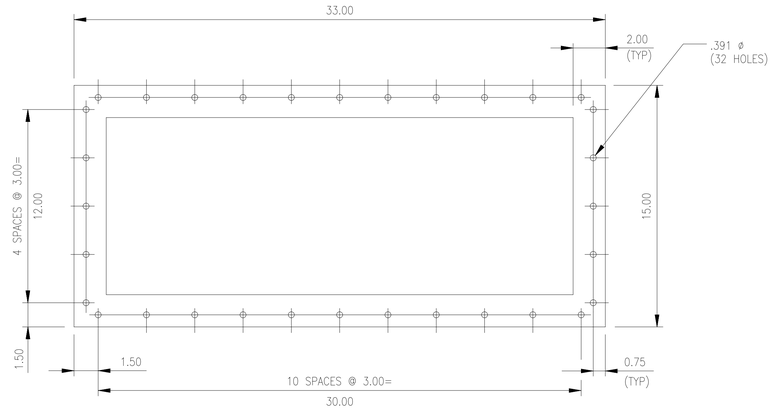

DETAIL CR M-9
SCALE: 3"=1'-0"

MAT'L: 16 GA GALV STL
USED TO MATCH DRILL
THE FOLLOWING PARTS:
1) DETAIL CL, SHT M-14
2) DETAIL CJ, SHT M-13
3) DETAIL CK, SHT M-14

THIS SHEET IS REFERENCE ONLY COPIED FROM 80K57281

3 0 3 6 9
SCALE: 3"=1'

SYM	ZONE	DESCRIPTION	DATE	APPROVAL

REVISIONS

SIGNATURES	DATE
DRAFTER	
CHECKER	
ENGINEER	
SUBMITTED	
APPROVED	DATE
TITLE	

NATIONAL AERONAUTICS AND SPACE ADMINISTRATION
JOHN F. KENNEDY SPACE CENTER, NASA
KENNEDY SPACE CENTER, FLORIDA

ASSEMBLY DRAWINGS
MPPU REFURBISHMENT DESIGN
ENVIRONMENTAL CONTROL SYSTEM
TEMPLATES, COILS

SIZE F | DWG. NO. 584F0301001 | REV –
PROJ. NO. 95255 | SHEET OF

M-9B

KSC FORM 1-11 (REV. 3/76) (C/G 3/93)

P:\95255\DRAWINGS\MECH\M-9B.DWG 27-JAN-2011 14:24 JOBETL

EAR 99

FOR ANY PURPOSE OTHER THAN IN CONNECTION WITH A DEFINITELY RELATED GOVERNMENT PROCUREMENT OPERATION, THE UNITED STATES GOVERNMENT THEREBY INCURS NO RESPONSIBILITY NOR ANY OBLIGATION WHATSOEVER; AND THE FACT THAT THE GOVERNMENT MAY HAVE FORMULATED, FURNISHED, OR IN ANY WAY SUPPLIED THE SAID DRAWINGS, SPECIFICATIONS OR ANY OTHER DATA IS NOT TO BE REGARDED BY IMPLICATION OR OTHERWISE IN ANY MANNER LICENSING THE HOLDER OR ANY OTHER PERSONS OR CORPORATION, OR CONVEYING ANY RIGHTS OR PERMISSION TO MANUFACTURE, USE, OR SELL ANY PATENTED INVENTION THAT IN ANY WAY BE RELATED THERETO.

EAR 99 – NO LICENSE REQUIRED

The information contained in this document is technical in content, but not technical data as defined by the International Traffic in Arms (ITAR) or the Export Administration Regulations (EAR), and therefore is EAR 99 NLR, meaning no license required, suitable for public release. (General Prohibition Six (Embargo) applies to all items subject to the EAR, i.e. items on the CCL and within EAR 99 NLR. You may not make an export or reexport contrary to the provisions of part 746 (Embargos and Other Special Controls) of the EAR and 22 CFR part 126.1 of the ITAR).

EDDR # 113043 : NASA KSC Export Control Office (321- 867-9209)

EAR 99

SPECIFIC NOTES:

A. TUBE SIDE DESIGN PRESSURE: 465 PSIG.

B. COIL CASING TO BE AIRTIGHT DESIGN: OPERATING PRESSURE: 4 PSIG – TEST PRESSURE: 6 PSIG.

C. COIL CASING TO BE ALL WELDED CONSTRUCTION.

D. EQUAL INTERLACED CIRCUITS REQUIRED.

E. OR APPROVED EQUAL.

F. DISTRIBUTOR TUBING SHALL BE OF EQUAL LENGTH.

G. COIL (INCLUDING CASING) SHALL BE COATED WITH FLEXIBLE POLYMER E–COAT WITH DRY FILM THICKNESS OF .6–1.2 MILS ON ALL SURFACES.

H. PENETRATIONS SHALL PROVIDE AIR TIGHT SEAL, ADEQUATELY SUPPORTED BY BRAZED FLANGE OR BACKUP RING.

J. FIELD VERIFY MOUNTING HOLE LOCATIONS WITH EXISTING FLANGE PATTERN.

K. WELD ALL FLANGES SEAMS.

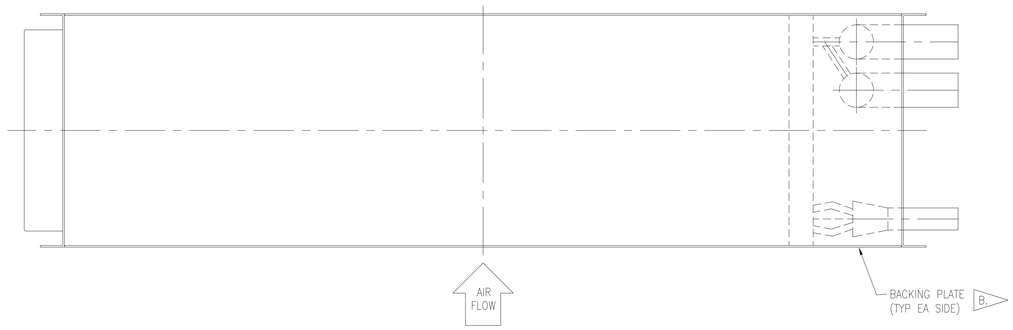

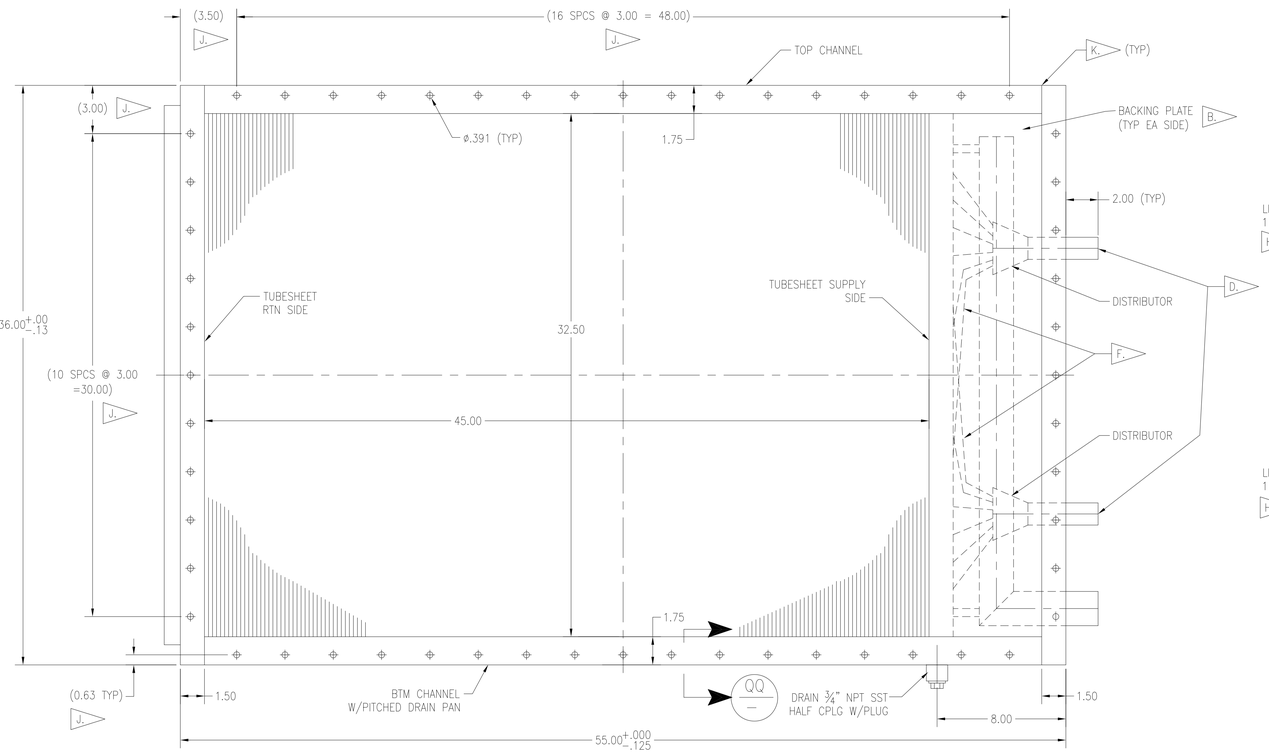

EVAPORATOR COIL ASSEMBLY

SCALE: 1:4

MANUFACTURER: SUPER RADIATOR COILS
MODEL: 32.5x45–12R–12/204
P/N: 16F03220450–3612EW00000–C03A02G01QR E.

COIL PERFORMANCE

AIR MASS FLOW (lbm/min)	ENTERING AIR SPEC. HUM.	ENTERING AIR TEMP.	ENTERING AIR PRESSURE	LEAVING AIR TEMP.	LEAVING AIR SPEC. HUM.	REFRIGERANT TYPE	REFRIGERANT SAT.	CAPACITY (btu/hr)
300	.02517	117°F	17.7 psia	40°F	.0053 (max)	R410A	35°F	738,000

MATERIALS OF CONSTRUCTION G.

TUBES	½"OD X .019 RIFLED WALL, COPPER, 26 ROWS HIGH, 12 ROWS DEEP, 36 CIRCUITS, INTERLACED CIRCUITS (2)
FINS	FLAT .0055 THK ALUMINUM, 17 FINS PER INCH
HEADERS	TYPE K COPPER
CASING	10 GA 304 STAINLESS, WELDED CONSTRUCTION
DISTRIBUTOR	1126–11–3/8"–40
CONNECTIONS	LIQUID: (2) 1 ⅜" OD COPPER RETURN: (2) 2 ⅛" OD COPPER

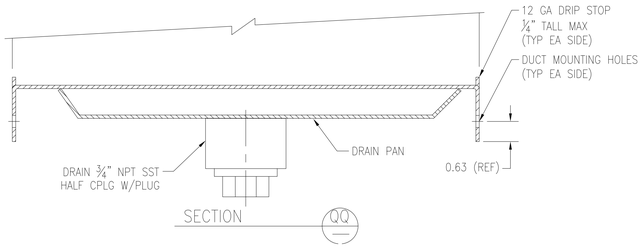

SYM	ZONE	DESCRIPTION	DATE	APPROVAL
		REVISIONS		

SIGNATURES		DATE
DRAFTER	T. JOBE	05/06/11
CHECKER	D. MAY	05/06/11
ENGINEER	A. JACQUES	05/06/11
	R. WITHERSPOON	05/06/11
	R. FRANCO	05/06/11
SUBMITTED	T.O. ADAMS	05/06/11
APPROVED	E.A. THAXTON	05/06/11

NATIONAL AERONAUTICS AND SPACE ADMINISTRATION
JOHN F. KENNEDY SPACE CENTER, NASA
KENNEDY SPACE CENTER, FLORIDA

ASSEMBLY DRAWINGS

MPPU REFURBISHMENT DESIGN ENVIRONMENTAL CONTROL SYSTEM EVAPORATOR COIL ASSEMBLY

SIZE	DWG. NO.	REV
F	584F0301001	–
PROJ. NO. 95255	SHEET	OF

TITLE M–9C

P:\95255\DRAWINGS\MECH\M–9C.DWG 28–APR–2011 10:08 JOBETL

KSC FORM 1–11 (REV. 3/76) (C/G 3/93)

EAR 99

FOR ANY PURPOSE OTHER THAN IN CONNECTION WITH A DEFINITELY RELATED GOVERNMENT PROCUREMENT OPERATION, THE UNITED STATES GOVERNMENT THEREBY INCURS NO RESPONSIBILITY NOR ANY OBLIGATION WHATSOEVER; AND THE FACT THAT THE GOVERNMENT MAY HAVE FORMULATED, FURNISHED, OR IN ANY WAY SUPPLIED THE SAID DRAWINGS, SPECIFICATIONS OR ANY OTHER DATA IS NOT TO BE REGARDED BY IMPLICATION OR OTHERWISE IN ANY MANNER LICENSING THE HOLDER OR ANY OTHER PERSONS OR CORPORATION, OR CONVEYING ANY RIGHTS OR PERMISSION TO MANUFACTURE, USE, OR SELL ANY PATENTED INVENTION THAT IN ANY WAY BE RELATED THERETO.

EAR 99 – NO LICENSE REQUIRED

The information contained in this document is technical in content, but not technical data as defined by the International Traffic in Arms (ITAR) or the Export Administration Regulations (EAR), and therefore is EAR 99 NLR, no export license required, suitable for public release. (General Prohibition Six (Embargo) applies to all items subject to the EAR, i.e. items on the CCL and within EAR 99 NLR. You may not make an export or reexport contrary to the provisions of part 746 (Embargos and Other Special Controls) of the EAR and 22 CFR part 126.1 of the ITAR).

EDDR # 113043 : NASA KSC Export Control Office (321- 867- 6039)

SPECIFIC NOTES:

A. TEST: TUBESIDE PNEUMATIC TEST UNDERWATER @ 50 PSIG.

B. COIL CASING TO BE AIRTIGHT DESIGN: OPERATING PRESSURE: 4 PSIG – TEST PRESSURE: 6 PSIG.

C. COIL CASING TO BE ALL WELDED CONSTRUCTION.

D. COIL (INCLUDING CASING) SHALL BE COATED WITH FLEXIBLE POLYMER E-COAT WITH DRY FILM THICKNESS OF .6-1.2 MILS ON ALL SURFACES.

E. PENETRATIONS SHALL PROVIDE AIR TIGHT SEAL, ADEQUATELY SUPPORTED BY BRAZED FLANGE OR BACKUP RING.

F. FIELD VERIFY MOUNTING HOLE LOCATIONS WITH EXISTING FLANGE PATTERN.

G. WELD ALL FLANGE SEAMS.

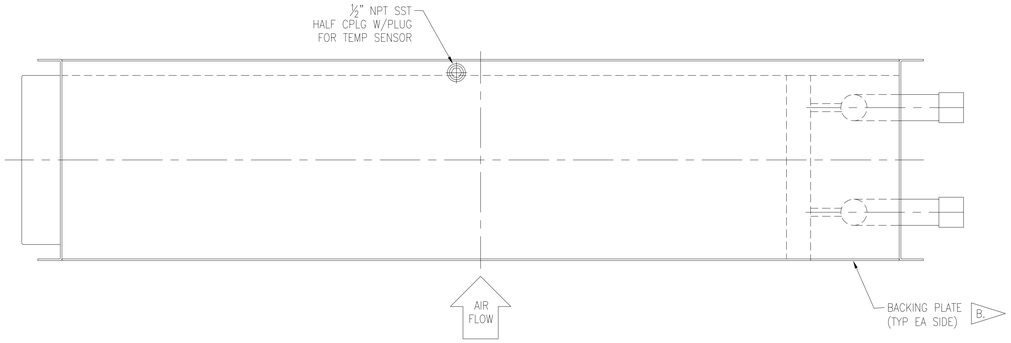

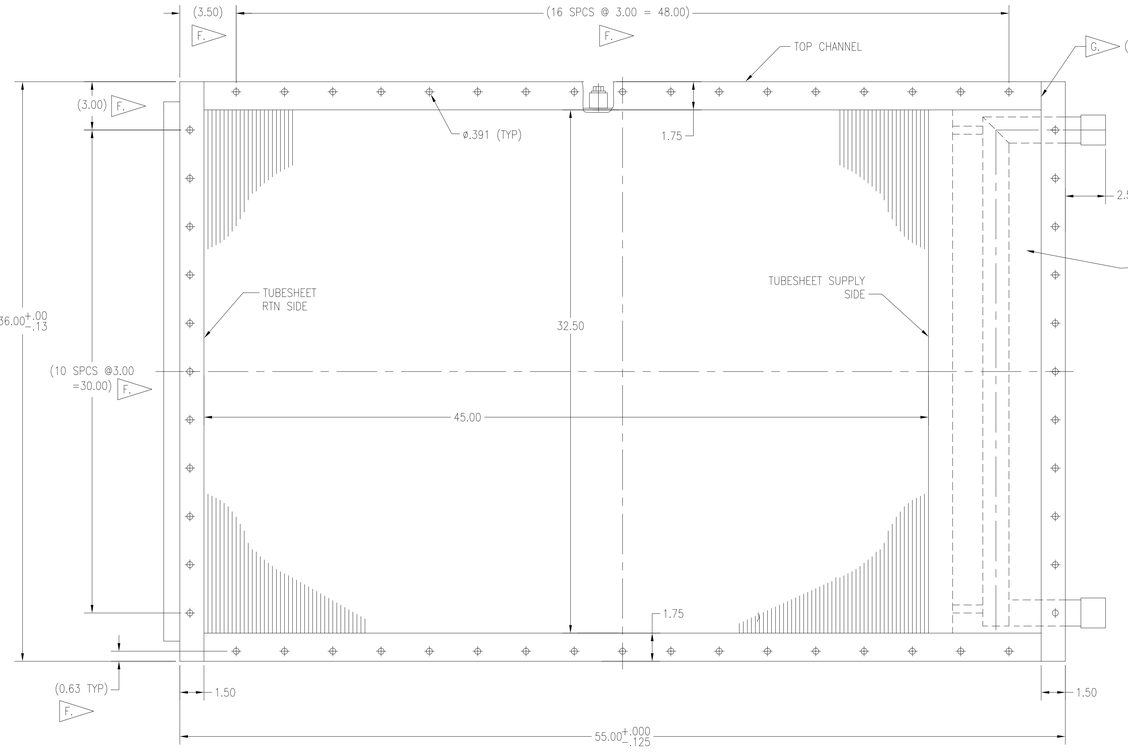

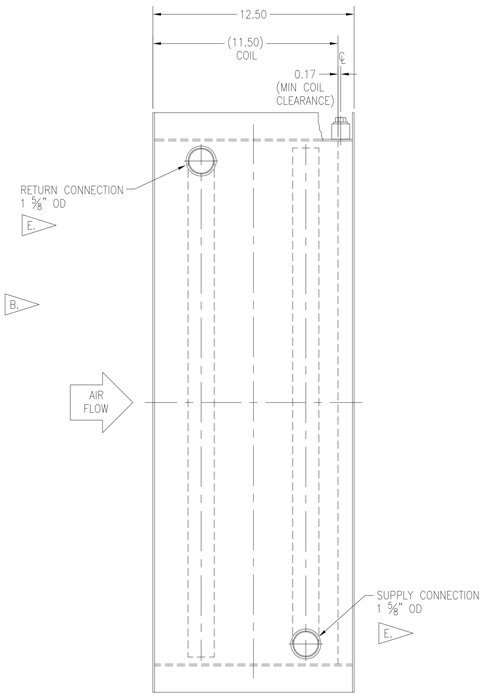

HEAT ABSORPTION COIL ASSEMBLY

SCALE: 1:4

MANUFACTURER: SUPER RADIATOR COILS
MODEL: 32.5x45-9R-12/216
P/N: 16503220450-1809AC06003-C02A01G01RL

COIL PERFORMANCE

AIR MASS FLOW (lbm/min)	ENTERING AIR			LEAVING AIR		FLUID TYPE	GPM	CAPACITY (btu/hr)
	SPEC. HUM.	TEMP.	PRESSURE	TEMP.	SPEC. HUM.			
300	.02517	167°F	17.7 psia	117°F	.02517	20% PROPYLENE GLYCOL MIXTURE	13.75	222,317

MATERIALS OF CONSTRUCTION D.

TUBES	½"OD X .016 WALL COPPER, SPRING TURBULATORS 26 ROWS HIGH, 9 ROWS DEEP, 18 CIRCUITS
FINS	FLAT .0045" THK ALUMINUM, SINEWAVE, 18 FINS PER INCH
HEADERS	1 ⅝" OD CONNECTIONS, TYPE K COPPER
CASING	10 GA 304 SST, WELDED CONSTRUCTION

SYM	ZONE	DESCRIPTION	DATE	APPROVAL
REVISIONS				

SIGNATURES		DATE
DRAFTER	T. JOBE	05/06/11
CHECKER	D. MAY	05/06/11
ENGINEER	A. JACQUES	05/06/11
	R. WITHERSPOON	05/06/11
	R. FRANCO	05/06/11
SUBMITTED	T.O. ADAMS	05/06/11
APPROVED	E.A. THAXTON	DATE 05/06/11
TITLE		

NATIONAL AERONAUTICS AND SPACE ADMINISTRATION
JOHN F. KENNEDY SPACE CENTER, NASA
KENNEDY SPACE CENTER, FLORIDA

ASSEMBLY DRAWINGS
MPPU REFURBISHMENT DESIGN
ENVIRONMENTAL CONTROL SYSTEM
HEAT ABSORPTION COIL ASSEMBLY

SIZE	DWG. NO.	REV
F	584F0301001	–
PROJ. NO. 95255	SHEET	OF

M-9D

P:\95255\DRAWINGS\MECH\M-90.DWG 28-APR-2011 09:05 JOBEL

FOR ANY PURPOSE OTHER THAN IN CONNECTION WITH A DEFINITELY RELATED GOVERNMENT PROCUREMENT OPERATION, THE UNITED STATES GOVERNMENT THEREBY INCURS NO RESPONSIBILITY NOR ANY OBLIGATION WHATSOEVER, AND THE FACT THAT THE GOVERNMENT MAY HAVE FORMULATED, FURNISHED, OR IN ANY WAY SUPPLIED THE SAID DRAWINGS, SPECIFICATIONS OR ANY OTHER DATA IS NOT TO BE REGARDED BY IMPLICATION OR OTHERWISE IN ANY MANNER LICENSING THE HOLDER OR ANY OTHER PERSONS OR CORPORATION, OR CONVEYING ANY RIGHTS OR PERMISSION TO MANUFACTURE, USE, OR SELL ANY PATENTED INVENTION THAT IN ANY WAY BE RELATED THERETO.

EAR 99 - NO LICENSE REQUIRED

The information contained in the document is technical in content, but not technical data as defined by the International Traffic in Arms Regulations (ITAR) or the Export Administration Regulations (EAR), and therefore is EAR 99 NLR, no export license required, suitable for public release. (General Prohibition Six (Embargo) applies to all items subject to the EAR, i.e. items on the CCL and within EAR 99 NLR. You may not make an export or reexport contrary to the provisions of part 746 (Embargos and Other Special Controls) of the EAR and 22 CFR part 126.1 of the ITAR).

EDDR # 113043 - NASA KSC Export Control Office (321- 867-6039)

EAR 99

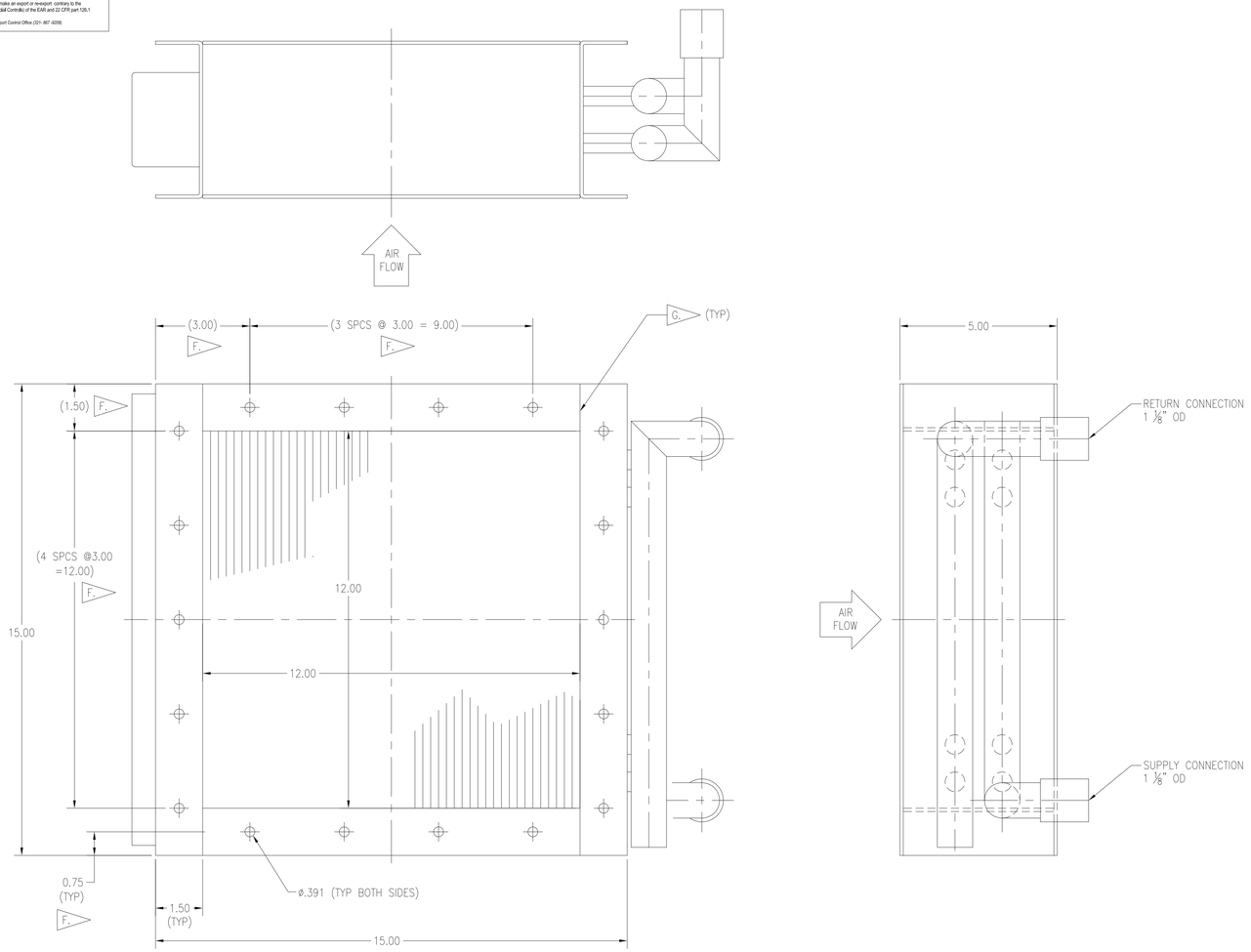

OUTLET 1 RE-HEAT COIL ASSEMBLY
SCALE: 1:4

MANUFACTURER: SUPER RADIATOR COILS
MODEL: 12x12-3R-58/144
P/N: 02F01200120-0303AH04000-C04A05G01LL E.

SPECIFIC NOTES:

A. TEST: TUBESIDE PNEUMATIC TEST UNDERWATER @ 50 PSIG.

B. COIL CASING TO BE AIRTIGHT DESIGN: OPERATING PRESSURE: 4 PSIG – TEST PRESSURE: 6 PSIG.

C. COIL CASING TO BE ALL WELDED CONSTRUCTION.

D. COIL (INCLUDING CASING) SHALL BE COATED WITH FLEXIBLE POLYMER E-COAT WITH DRY FILM THICKNESS OF .6-1.2 MILS ON ALL SURFACES.

E. OR APPROVED EQUAL.

F. FIELD VERIFY MOUNTING HOLE LOCATIONS WITH EXISTING FLANGE PATTERN.

G. WELD ALL FLANGES SEAMS.

COIL PERFORMANCE						
AIR MASS FLOW (lbm/min)	ENTERING AIR TEMP.	LEAVING AIR TEMP.	FLUID TYPE	ENTERING FLUID TEMP	CAPACITY (MBH)	GPM
85	45°F	105°F	20% PROPYLENE GLYCOL MIXTURE	195°F	74.5	9.0

MATERIALS OF CONSTRUCTION D.	
TUBES	5/8"OD X .020 WALL COPPER 8 ROWS HIGH, 3 ROWS DEEP, 3 CIRCUITS
FINS	FLAT .0080" THK ALUMINUM, 12 FINS PER INCH
HEADERS	7/8", 1 1/8" OD CONNECTIONS, TYPE K COPPER
CASING	10 GA 304 SST, WELDED CONSTRUCTION

SYM	ZONE	DESCRIPTION	DATE	APPROVAL

REVISIONS

SIGNATURES		DATE
DRAFTER	T. JOBE	05/06/11
CHECKER	D. MAY	05/06/11
ENGINEER	A. JACQUES	05/06/11
	R. WITHERSPOON	05/06/11
	R. FRANCO	05/06/11
SUBMITTED	T.O. ADAMS	05/06/11
APPROVED	E.A. THAXTON	05/06/11
TITLE		

NATIONAL AERONAUTICS AND SPACE ADMINISTRATION
JOHN F. KENNEDY SPACE CENTER, NASA
KENNEDY SPACE CENTER, FLORIDA

ASSEMBLY DRAWINGS
MPPU REFURBISHMENT DESIGN
ENVIRONMENTAL CONTROL SYSTEM
OUTLET #1 REHEAT COIL

SIZE F | DWG. NO. 584F0301001 | REV –
PROJ. NO. 95255 | SHEET OF

M-9E

P:\95255\DRAWINGS\MECH\M-9E.DWG 30-MAR-2011 10:13 JOBETL

KSC FORM 1-11 (REV. 3/76) (C/G 3/93)

EAR 99

FOR ANY PURPOSE OTHER THAN IN CONNECTION WITH A DEFINITELY RELATED GOVERNMENT PROCUREMENT OPERATION, THE UNITED STATES GOVERNMENT THEREBY INCURS NO RESPONSIBILITY NOR ANY OBLIGATION WHATSOEVER; AND THE FACT THAT THE GOVERNMENT MAY HAVE FORMULATED, FURNISHED, OR IN ANY WAY SUPPLIED THE SAID DRAWINGS, SPECIFICATIONS OR ANY OTHER DATA IS NOT TO BE REGARDED BY IMPLICATION OR OTHERWISE IN ANY MANNER LICENSING THE HOLDER OR ANY OTHER PERSONS OR CORPORATION, OR CONVEYING ANY RIGHTS OR PERMISSION TO MANUFACTURE, USE, OR SELL ANY PATENTED INVENTION THAT IN ANY WAY BE RELATED THERETO.

EAR 99 - NO LICENSE REQUIRED

The information contained in this document is technical in content, but not technical data as defined by the International Traffic in Arms (ITAR) or as defined by the Export Administration Regulations (EAR), and therefore is EAR 99 NLR, no export license required, suitable for public release. (General Prohibition Six (Embargo) applies to all items subject to the EAR, i.e. items on the CCL and within EAR 99 NLR. You may not make an export or reexport contrary to the provisions of part 746 (Embargos and Other Special Controls) of the EAR and 22 CFR part 126.1 of the ITAR).

EDDR # 113043 : NASA KSC Export Control Office (321- 867-9209)

SPECIFIC NOTES:

A — TO MATCH HEAT PIPE FLANGE:

B — MODIFY AT INSTALLATION TO PROVIDE CLEARANCE.

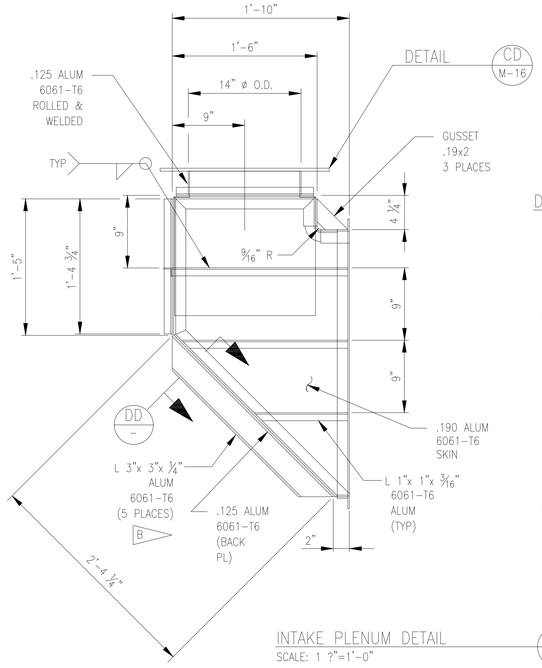

INTAKE PLENUM DETAIL — CE M-9
SCALE: 1 ?"=1'-0"

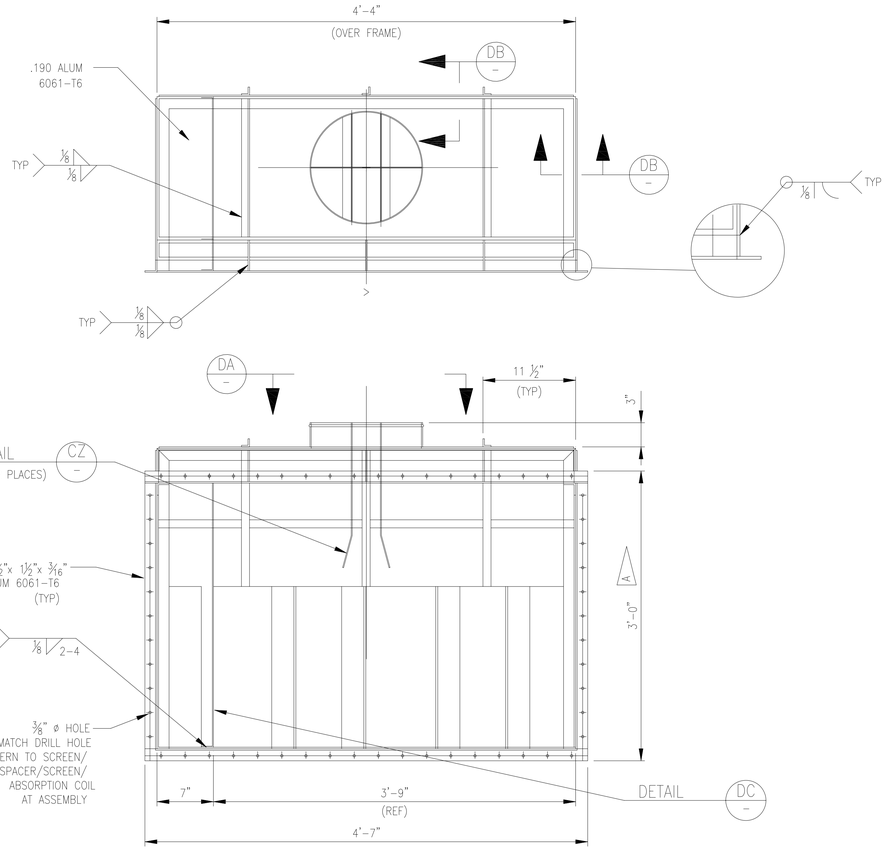

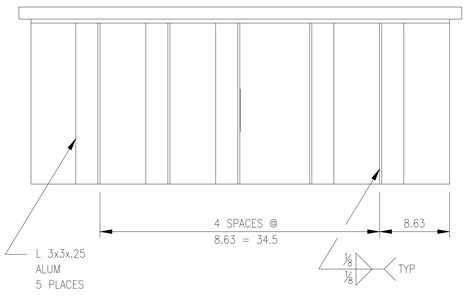

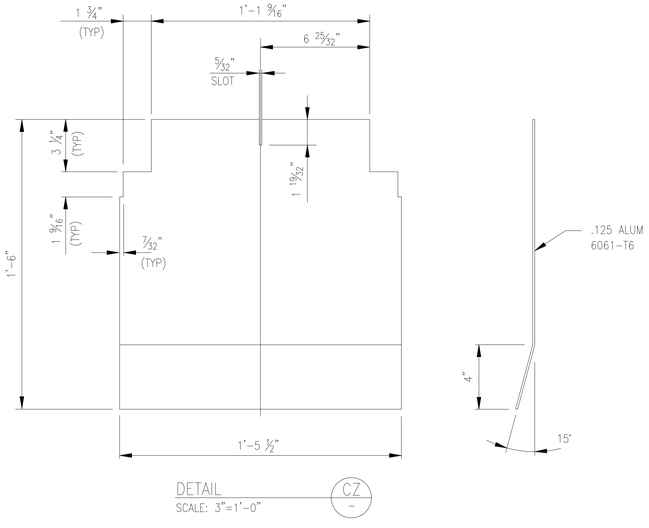

DETAIL — CZ
SCALE: 3"=1'-0"
QTY: 2 PER UNIT

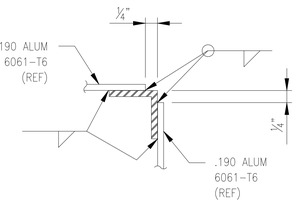

SECTION — DB –
SCALE: 6"=1'-0"

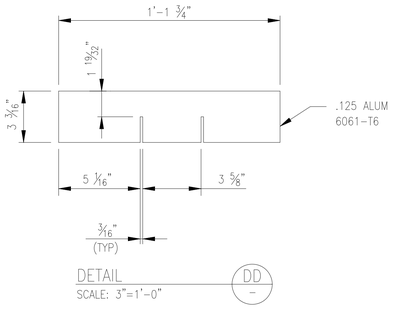

DETAIL — DD –
SCALE: 3"=1'-0"

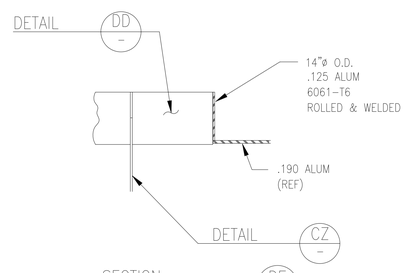

SECTION — DE –
SCALE: 3"=1'-0"

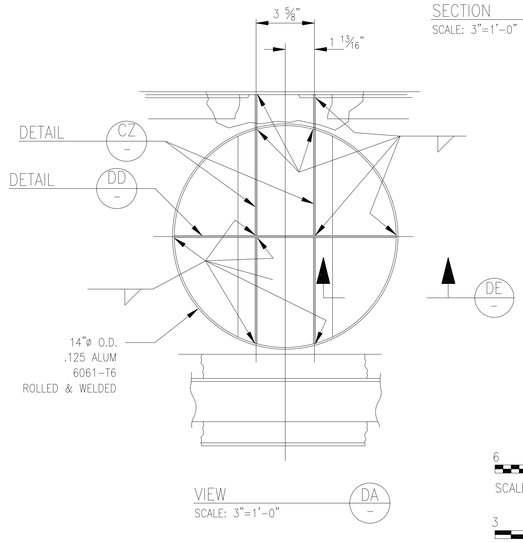

VIEW — DA –
SCALE: 3"=1'-0"

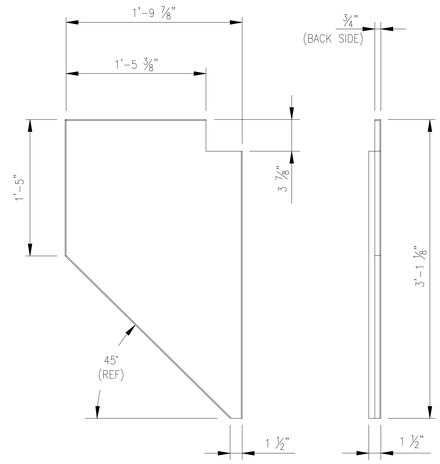

DETAIL — DC –
SCALE: 1 1/2"=1'-0"
MAT'L: ℞ ⅛" ALUM 6061-T6

THIS SHEET IS REFERENCE ONLY COPIED FROM 80K57281

6 0 12 24
SCALE:1 1/2" = 1'

3 0 3 6 9
SCALE: 3" = 1'

0 2 4 6
SCALE: 6" = 1'

SYM	ZONE	DESCRIPTION	DATE	APPROVAL
		REVISIONS		

SIGNATURES	DATE
DRAFTER	
CHECKER	
ENGINEER	
SUBMITTED	
APPROVED	DATE
TITLE	

NATIONAL AERONAUTICS AND SPACE ADMINISTRATION
JOHN F. KENNEDY SPACE CENTER, NASA
KENNEDY SPACE CENTER, FLORIDA

ASSEMBLY DRAWINGS
MPPU REFURBISHMENT DESIGN
ENVIRONMENTAL CONTROL SYSTEM
INTAKE PLENUM DETAILS

SIZE	DWG. NO.	REV
F	584F0301001	–
PROJ. NO.	95255	SHEET OF

M-10

P:\95255\DRAWINGS\MECH\M-10.DWG 27-JAN-2011 15:53 JOBETL

KSC FORM 1-11 (REV. 3/76) (C/G 3/93)

FOR ANY PURPOSE OTHER THAN IN CONNECTION WITH A DEFINITELY RELATED GOVERNMENT PROCUREMENT OPERATION, THE UNITED STATES GOVERNMENT THEREBY INCURS NO RESPONSIBILITY NOR ANY OBLIGATION WHATSOEVER; AND THE FACT THAT THE GOVERNMENT MAY HAVE FORMULATED, FURNISHED, OR IN ANY WAY SUPPLIED THE SAID DRAWINGS, SPECIFICATIONS OR ANY OTHER DATA IS NOT TO BE REGARDED BY IMPLICATION OR OTHERWISE IN ANY MANNER LICENSING THE HOLDER OR ANY OTHER PERSONS OR CORPORATION, OR CONVEYING ANY RIGHTS OR PERMISSION TO MANUFACTURE, USE, OR SELL ANY PATENTED INVENTION THAT IN ANY WAY BE RELATED THERETO.

EAR 99 - NO LICENSE REQUIRED

The information contained in this document is technical in content, but not technical data as defined by the International Traffic in Arms (ITAR) or the Export Administration Regulations (EAR), and therefore is EAR 99 NLR, meaning no license required, suitable for public release. (General Prohibition Six (Embargo) applies to all items subject to the EAR, i.e. items on the CCL and within EAR 99 NLR. You may not make an export or reexport contrary to the provisions of part 746 (Embargos and Other Special Controls) of the EAR and 22 CFR part 126.1 of the ITAR).

EDDR # 113043 : NASA KSC Export Control Office (321- 867-9209)

EAR 99

SPECIFIC NOTES:

A. REMOVE ALL BURRS AND BREAK SHARP EDGES.

B. PREPARE AND PAINT IN ACCORDANCE WITH GENERAL NOTES FROM SHEET V-1A.

C. FOR NUMBERED FLAG NOTES REFER TO SHEET M-1.

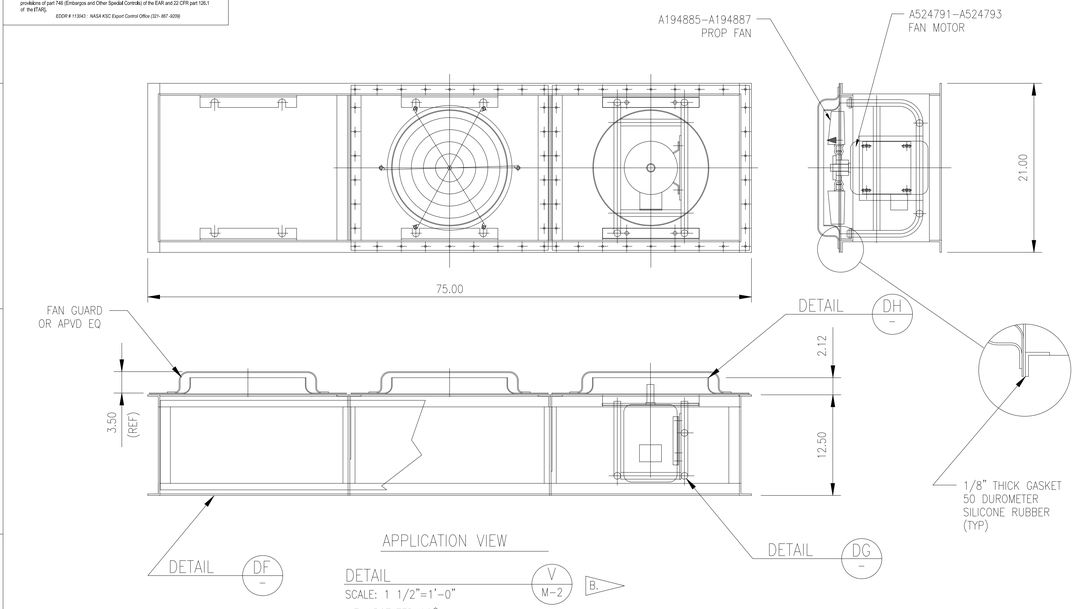

APPLICATION VIEW

DETAIL V M-2 B.
SCALE: 1 1/2"=1'-0"
VIEW ROTATED 90^

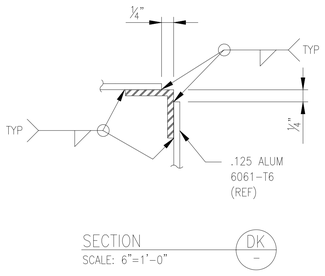

SECTION DK
SCALE: 6"=1'-0"

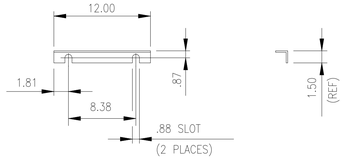

DETAIL DJ B.
SCALE: 1 1/2"=1'-0"
MAT'L: ALUM L1.5x1.5x.19
QTY: 6 PER UNIT

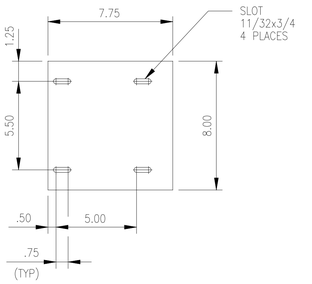

DETAIL DN B.
SCALE: 6"=1'-0"
MAT'L: .190 ALUM Ç 6061-T6

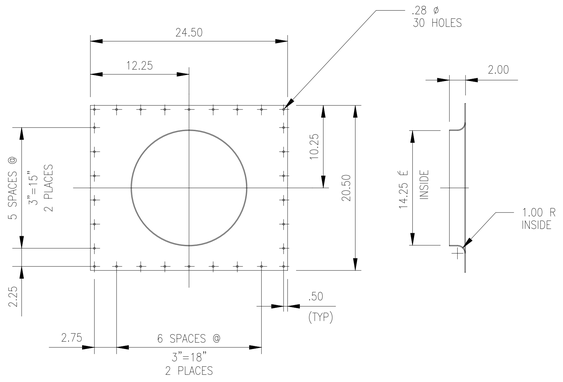

DETAIL DH B.
SCALE: 1 1/2"=1'-0"
MAT'L: .090 ALUM 3003-H14
QTY: 3 PER UNIT

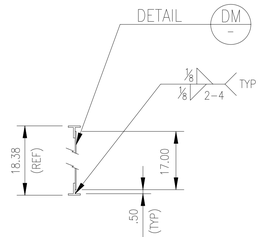

VIEW DL
SCALE: 1 1/2"=1'-0"

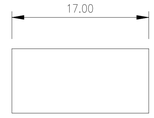

DETAIL DM B.
SCALE: 1 1/2"=1'-0"
MAT'L: .125 ALUM 6061-T6
QTY: 2 PER UNIT

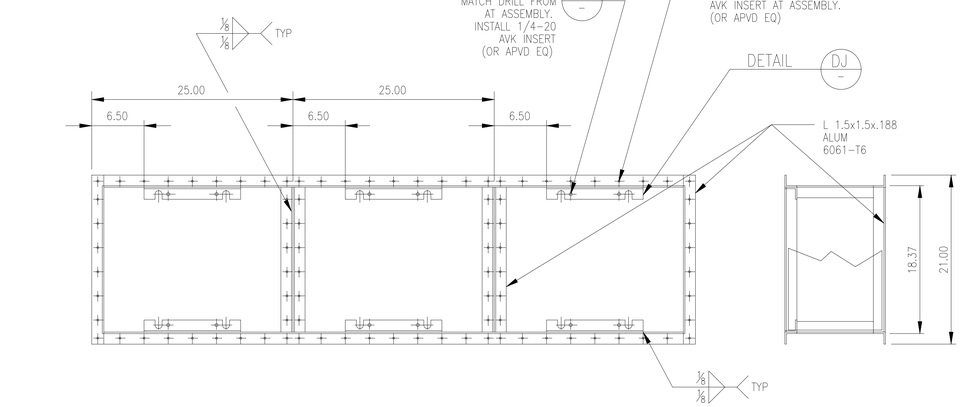

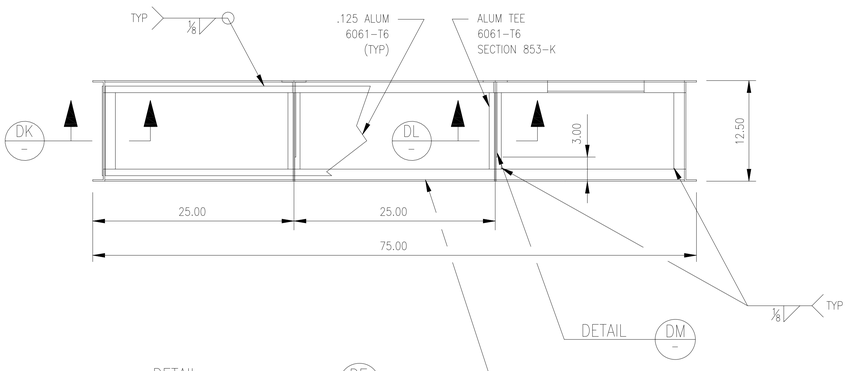

DETAIL DF B.
SCALE: 1 1/2"=1'-0"
MAT'L: ALUM, AS NOTED

MATCH DRILL TO HEAT REJECTION
COIL. USE TEMPLATE PROVIDED.

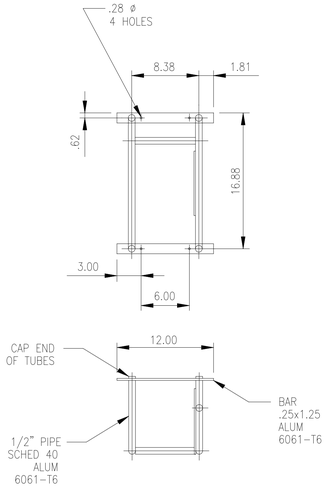

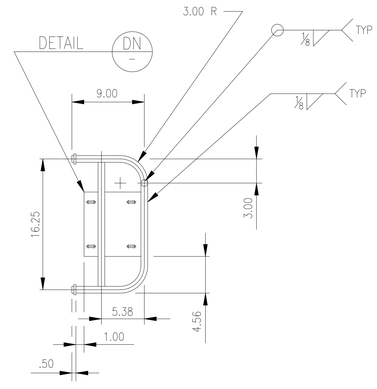

DETAIL DG B.
SCALE: 1 1/2"=1'-0"
MAT'L: ALUM, AS NOTED

THIS SHEET IS REFERENCE ONLY COPIED FROM 80K57281

6 0 12 24
SCALE:1 1/2" = 1'

0 2 4 6
SCALE: 6" = 1'

SYM	ZONE	DESCRIPTION	DATE	APPROVAL
		REVISIONS		

SIGNATURES		DATE
DRAFTER	T. JOBE	05/06/11
CHECKER	D. MAY	05/06/11
ENGINEER	A. JACQUES	05/06/11
	R. WITHERSPOON	05/06/11
	R. FRANCO	05/06/11
SUBMITTED	T.O. ADAMS	05/06/11
APPROVED	E.A. THAXTON	05/06/11

NATIONAL AERONAUTICS AND SPACE ADMINISTRATION
JOHN F. KENNEDY SPACE CENTER, NASA
KENNEDY SPACE CENTER, FLORIDA

ASSEMBLY DRAWINGS
MPPU REFURBISHMENT DESIGN
ENVIRONMENTAL CONTROL SYSTEM
SECTIONS & DETAILS

SIZE F | DWG. NO. 584F0301001 | REV —

TITLE | PROJ. NO. 95255 | SHEET | OF

M-11

P:\95255\DRAWINGS\MECH\M-11.DWG 24-FEB-2011 09:43 JOBEIL

KSC FORM 1-11 (REV. 3/76) (C/G 3/93)

EAR 99

FOR ANY PURPOSE OTHER THAN IN CONNECTION WITH A DEFINITELY RELATED GOVERNMENT PROCUREMENT OPERATION, THE UNITED STATES GOVERNMENT THEREBY INCURS NO RESPONSIBILITY NOR ANY OBLIGATION WHATSOEVER; AND THE FACT THAT THE GOVERNMENT MAY HAVE FORMULATED, FURNISHED, OR IN ANY WAY SUPPLIED THE SAID DRAWINGS, SPECIFICATIONS OR ANY OTHER DATA IS NOT TO BE REGARDED BY IMPLICATION OR OTHERWISE IN ANY MANNER LICENSING THE HOLDER OR ANY OTHER PERSONS OR CORPORATION, OR CONVEYING ANY RIGHTS OR PERMISSION TO MANUFACTURE, USE, OR SELL ANY PATENTED INVENTION THAT IN ANY WAY BE RELATED THERETO.

EAR 99 - NO LICENSE REQUIRED

The information contained in this document is technical in content, but not technical data as defined by the International Traffic in Arms (ITAR) or the Export Administration Regulations (EAR), and therefore is EAR 99 NLR, meaning no license required, suitable for public release. (General Prohibition Six (Embargo) applies to all items subject to the EAR, i.e. items on the CCL and within EAR 99 NLR. You may not make an export or reexport contrary to the prohibitions of part 746 (Embargos and Other Special Controls) of the EAR and 22 CFR part 126.1 of the ITAR).

EDDR # 113043 : NASA KSC Export Control Office (321- 867-9209)

EAR 99

SPECIFIC NOTES:

A — 304 SST WIRE CLOTH, 8x8 MESH, .063 WIRE DIAMETER, 0.062 WIDTH OPENING.

B — TIG WELD WIRE CLOTH TO SST FRAME.

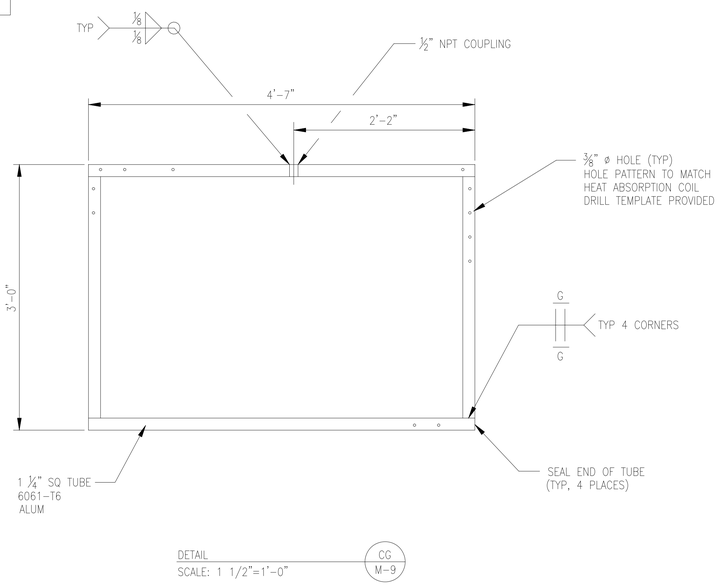

DETAIL — CG / M-9
SCALE: 1 1/2"=1'-0"

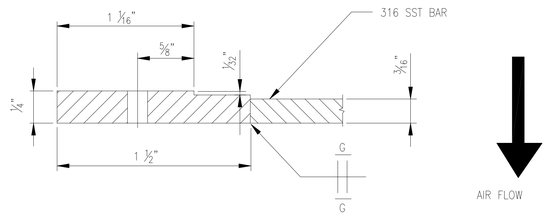

SECTION — DR / –
SCALE: NONE

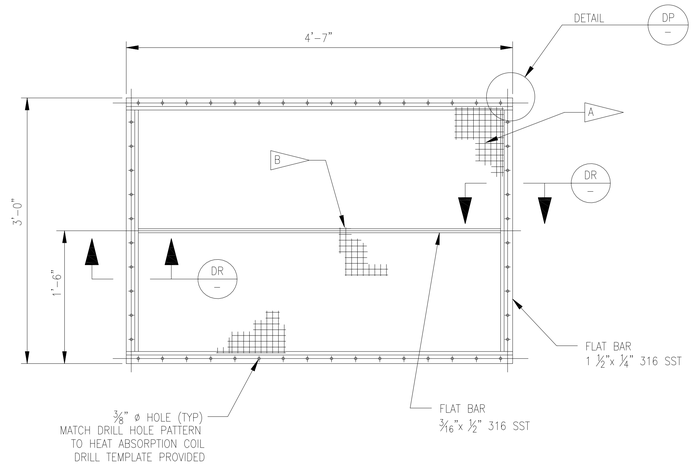

DETAIL — CF / M-9
SCALE: 1 1/2"=1'-0"
QTY: 2 PER UNIT

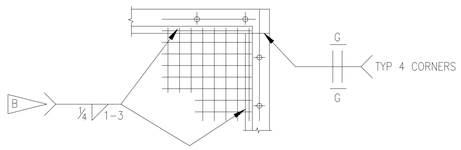

DETAIL — DP / –
SCALE: 3"=1'-0"

THIS SHEET IS REFERENCE ONLY COPIED FROM 80K57281

6 0 12 24
SCALE: 1 1/2"= 1'

3 0 3 6 9
SCALE: 3"= 1'

SYM	ZONE	DESCRIPTION	DATE	APPROVAL

REVISIONS

SIGNATURES	DATE
DRAFTER	
CHECKER	
ENGINEER	
SUBMITTED	
APPROVED	DATE
TITLE	

NATIONAL AERONAUTICS AND SPACE ADMINISTRATION
JOHN F. KENNEDY SPACE CENTER, NASA
KENNEDY SPACE CENTER, FLORIDA

ASSEMBLY DRAWINGS

MPPU REFURBISHMENT DESIGN
ENVIRONMENTAL CONTROL SYSTEM
SCREEN & SPACER DETAILS

M-11A

SIZE	DWG. NO.	REV
F	584F0301001	—
PROJ. NO. 95255	SHEET	OF

P:\95255\DRAWINGS\MECH\M-11A.DWG 27-JAN-2011 16:40 JOBETL

KSC FORM 1-11 (REV. 3/76) (C/G 3/93)

EAR 99

FOR ANY PURPOSE OTHER THAN IN CONNECTION WITH A DEFINITELY RELATED GOVERNMENT PROCUREMENT OPERATION, THE UNITED STATES GOVERNMENT THEREBY INCURS NO RESPONSIBILITY NOR ANY OBLIGATION WHATSOEVER; AND THE FACT THAT THE GOVERNMENT MAY HAVE FORMULATED, FURNISHED, OR IN ANY WAY SUPPLIED THE SAID DRAWINGS, SPECIFICATIONS OR ANY OTHER DATA IS NOT TO BE REGARDED BY IMPLICATION OR OTHERWISE IN ANY MANNER LICENSING THE HOLDER OR ANY OTHER PERSONS OR CORPORATION, OR CONVEYING ANY RIGHTS OR PERMISSION TO MANUFACTURE, USE, OR SELL ANY PATENTED INVENTION THAT IN ANY WAY BE RELATED THERETO.

EAR 99 – NO LICENSE REQUIRED

The Information contained in this document is technical in content, but not technical data as defined by the International Traffic in Arms (ITAR) or the Export Administration Regulations (EAR), and therefore is EAR 99 NLR, meaning no license required, subject to public release. (General Prohibition Six (Embargo) applies to all items subject to the EAR, i.e. items on the CCL and within EAR 99 NLR. You may not make an export or reexport contrary to the prohibitions of part 746 (Embargos and Other Special Controls) of the EAR and 22 CFR part 126.1 of the ITAR).

EDDR # 113043 : NASA KSC Export Control Office (321- 867-9209)

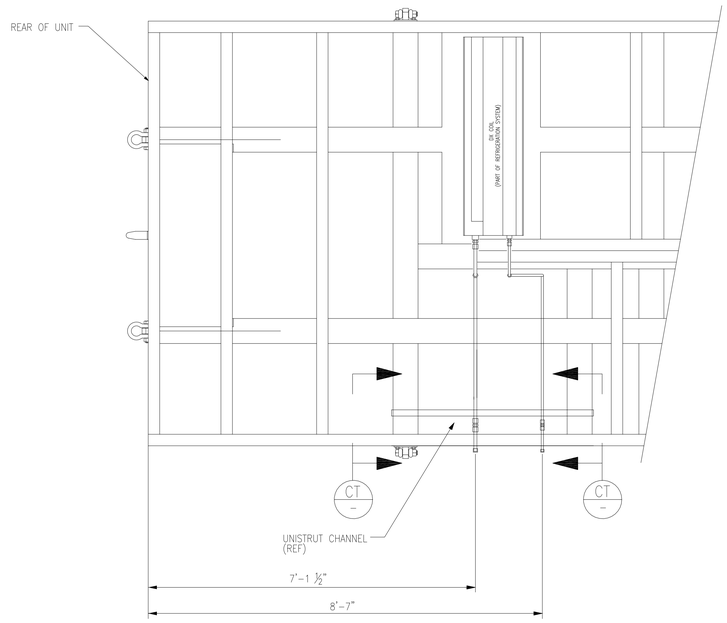

DETAIL CS M-3
SCALE: 3/4" = 1'-0"

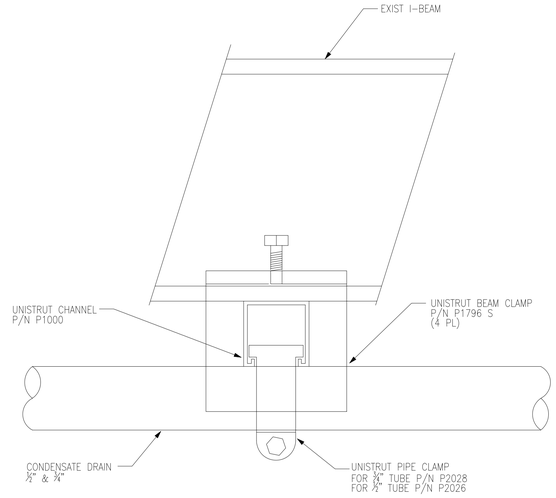

DETAIL CT M-3 (2 PL)
SCALE: NONE

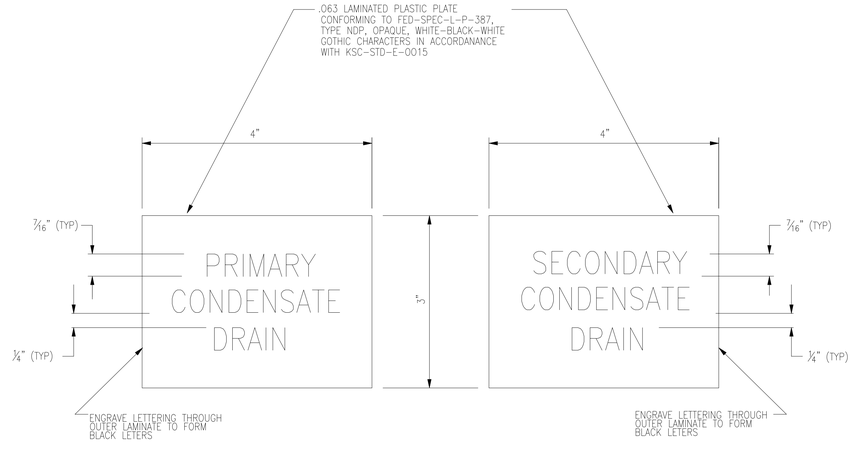

ENGRAVED NAMEPLATE DETAIL CU M-3
SCALE: FULL

ENGRAVED NAMEPLATE DETAIL CV M-3
SCALE: FULL

THIS SHEET IS REFERENCE ONLY COPIED FROM 80K57281

SYM	ZONE	DESCRIPTION	DATE	APPROVAL

REVISIONS

SIGNATURES	DATE
DRAFTER	
CHECKER	
ENGINEER	
SUBMITTED	
APPROVED	DATE
TITLE	

NATIONAL AERONAUTICS AND SPACE ADMINISTRATION
JOHN F. KENNEDY SPACE CENTER, NASA
KENNEDY SPACE CENTER, FLORIDA

ASSEMBLY DRAWINGS

MPPU REFURBISHMENT DESIGN
ENVIRONMENTAL CONTROL SYSTEM
CONDENSATE DRAIN DETAILS

SIZE	DWG. NO.	REV
F	584F0301001	–

M-11B

PROJ. NO. 95255 SHEET OF

P:\95255\DRAWINGS\MECH\M-12.DWG 27-JAN-2011 17:03 JOBEIL

FOR ANY PURPOSE OTHER THAN IN CONNECTION WITH A DEFINITELY RELATED GOVERNMENT PROCUREMENT OPERATION, THE UNITED STATES GOVERNMENT THEREBY INCURS NO RESPONSIBILITY NOR ANY OBLIGATION WHATSOEVER; AND THE FACT THAT THE GOVERNMENT MAY HAVE FORMULATED, FURNISHED, OR IN ANY WAY SUPPLIED THE SAID DRAWINGS, SPECIFICATIONS OR ANY OTHER DATA IS NOT TO BE REGARDED BY IMPLICATION OR OTHERWISE IN ANY MANNER LICENSING THE HOLDER OR ANY OTHER PERSONS OR CORPORATION, OR CONVEYING ANY RIGHTS OR PERMISSION TO MANUFACTURE, USE, OR SELL ANY PATENTED INVENTION THAT IN ANY WAY BE RELATED THERETO.

EAR 99 – NO LICENSE REQUIRED

The Information contained in this document is technical in content, but not technical data as defined by the International Traffic in Arms (ITAR) or the Export Administration Regulations (EAR), and therefore is EAR 99 NLR, no export license required, suitable for public release. (General Prohibition Six (Embargo) applies to all items subject to the EAR, i.e. items on the CCL and within EAR 99 NLR. You may not make an export or reexport contrary to the provisions of part 746 (Embargos and Other Special Controls) of the EAR and 22 CFR part 126.1 of the ITAR).

EDDR # 113043 : NASA KSC Export Control Office (321- 867-9209)

EAR 99

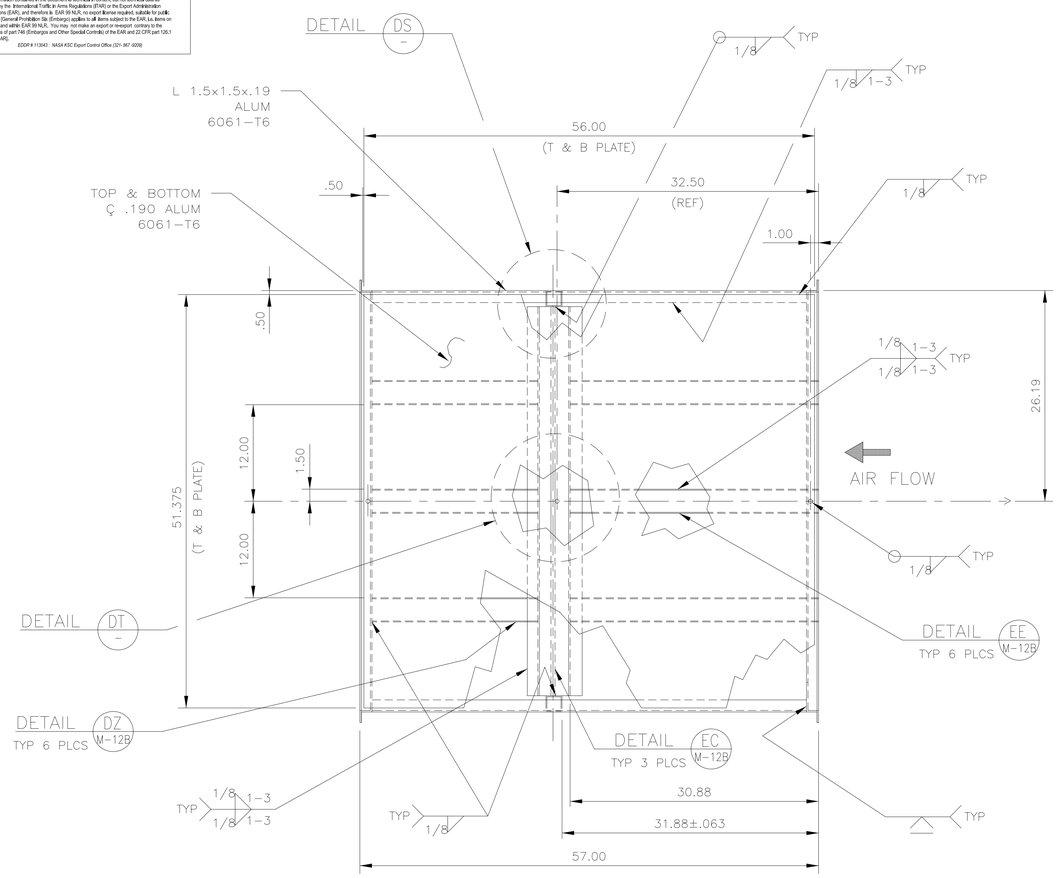

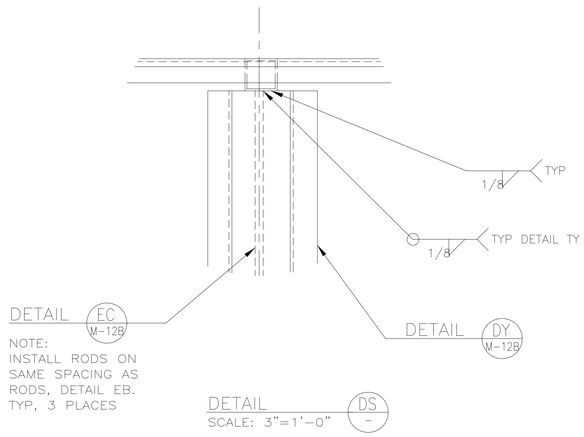

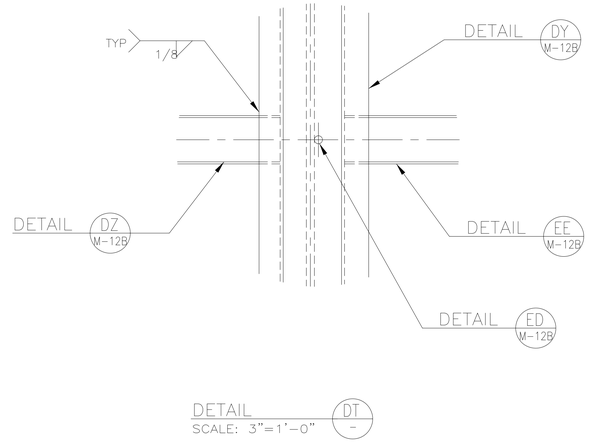

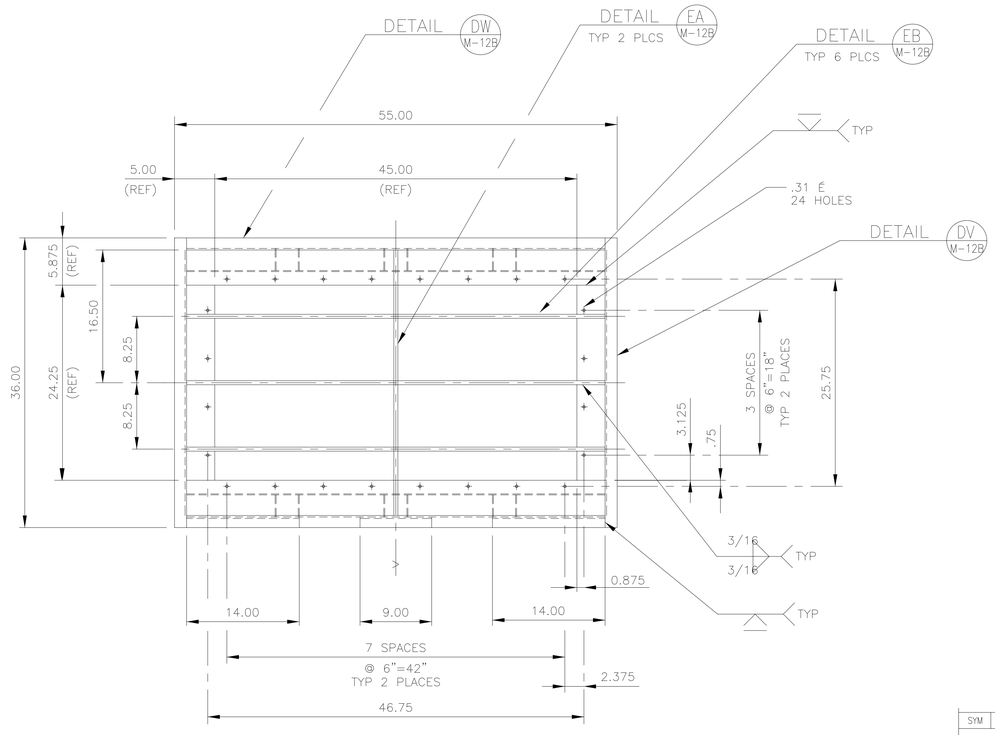

FOR SERIAL #'S:
001, 002, 003.

THIS SHEET IS REFERENCE ONLY COPIED FROM 80K57281

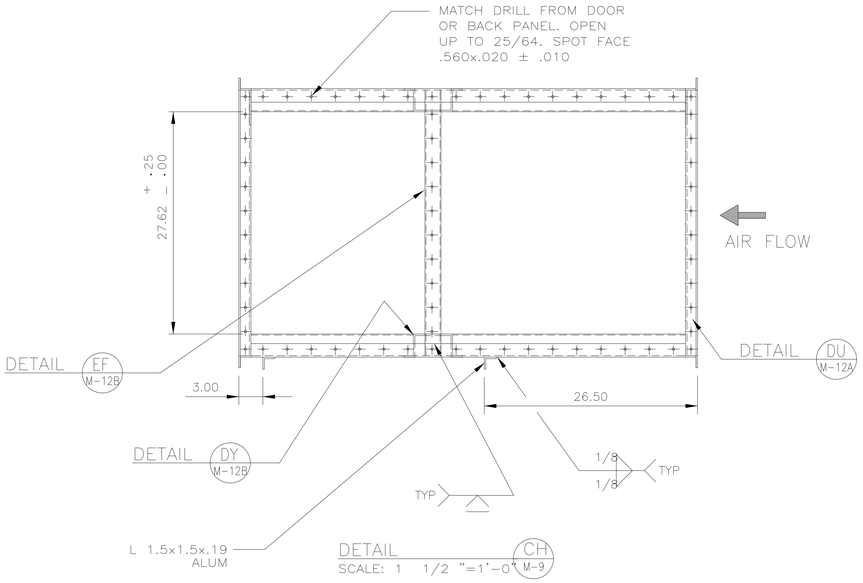

6 0 12 24
SCALE: 1 1/2 "= 1'

3 0 3 6 9
SCALE: 3"= 1'

SYM	ZONE	DESCRIPTION	DATE	APPROVAL
		REVISIONS		

SIGNATURES	DATE
DRAFTER	
CHECKER	
ENGINEER	
SUBMITTED	
APPROVED	DATE
TITLE	

NATIONAL AERONAUTICS AND SPACE ADMINISTRATION
JOHN F. KENNEDY SPACE CENTER, NASA
KENNEDY SPACE CENTER, FLORIDA

ASSEMBLY DRAWINGS

MPPU REFURBISHMENT DESIGN
ENVIRONMENTAL CONTROL SYSTEM
FILTER PRESSURE HOUSING ASSEMBLY

M-12

SIZE	DWG. NO.	REV
F	584F0301001	—
PROJ. NO. 95255	SHEET	OF

P:\95255\DRAWINGS\MECH\M-12.DWG 27-JAN-2011 17:03 JOBETL

KSC FORM 1-11 (REV. 3/76) (C/G 3/93)

EAR 99

FOR ANY PURPOSE OTHER THAN IN CONNECTION WITH A DEFINITELY RELATED GOVERNMENT PROCUREMENT OPERATION, THE UNITED STATES GOVERNMENT THEREBY INCURS NO RESPONSIBILITY NOR ANY OBLIGATION WHATSOEVER; AND THE FACT THAT THE GOVERNMENT MAY HAVE FORMULATED, FURNISHED, OR IN ANY WAY SUPPLIED THE SAID DRAWINGS, SPECIFICATIONS OR ANY OTHER DATA IS NOT TO BE REGARDED BY IMPLICATION OR OTHERWISE IN ANY MANNER LICENSING THE HOLDER OR ANY OTHER PERSONS OR CORPORATION, OR CONVEYING ANY RIGHTS OR PERMISSION TO MANUFACTURE, USE, OR SELL ANY PATENTED INVENTION THAT IN ANY WAY BE RELATED THERETO.

EAR 99 – NO LICENSE REQUIRED

The information contained in this document is technical in content, but not technical data as defined by the International Traffic in Arms (ITAR) or the Export Administration Regulations (EAR), and therefore is EAR 99 NLR, meaning no license required, suitable for public release. (General Prohibition Six (Embargo) applies to all items subject to the EAR, i.e. items on the CCL and within EAR 99 NLR. You may not make an export or reexport contrary to the prohibitions of part 746 (Embargos and Other Special Controls) of the EAR and 22 CFR part 126.1 of the ITAR).

EDDR # 113043 : NASA KSC Export Control Office (321- 867-9209)

DETAIL EH –

DETAIL EL M-12B — INSTALL WITH 1/4-20 HEX BOLT, FLAT AND LK WASHER (72 PLACES)

AIR FLOW

HEPA FILTER HOUSING FAR GLIDE PAK 3P1 1Hx2W, FOR PRE-FILTER AND HEPA FILTER. FULLY INSULATED

CARBON FILTER HOUSING FAR GLIDE PAK, RIGA-SORB 1Hx2W FULLY INSULATED

GASKET 1/8x1.5 NEOPRENE RUBBER 40 DUROMETER (2 PLACES)

18.00 (TYP)

57.00

DETAIL EK M-12B — INSTALL WITH 1/4-20 HEX BOLT, FLAT AND LK WASHER (72 PLACES)

SECTION EG – SCALE: 1 1/2"=1'-0"

DETAIL EJ – SCALE: 3"=1'-0"

DETAIL EM M-12B — TYPICAL 4 PER SIDE

DETAIL EH – SCALE: 3"=1'-0"

SPECIFIC NOTES:

A. PRESSURE TEST HOUSING TO 6 PSIG BEFORE INSULATING. HOUSING TO BE LEAK TIGHT AT 4 PSIG.

DETAIL EM M-12B — TYPICAL 4 PER SIDE

INSTALL AVK INSERT (IN TUBE) WITH 1/4-20 HEX BOLT (TYP 8 PLACES)

1/4-20 HEX BOLT AND NUT WITH FLAT & LOCK WASHERS

HEPA FILTER HOUSING

CARBON FILTER HOUSING

DETAIL OF GASKET CORNER

SECTION EJ – SCALE: 3"=1'-0"

EG – AIR FLOW EG –

3.00

26.50 (REF)

INSTALL AVK SERIES A-L INSERT (WITH SEAL). 72 PLACES, BOTH SIDES. P/N ALS4-4200-260SB

DETAIL DU M-12 SCALE: 1 1/2"=1'-0"

MATCH DRILL HOLE PATTERN FROM TEMPLATE DETAIL F, SHEET M-9A.

55.00

36.00

MATCH DRILL .28 ø INTO GLIDE/PACK. INSTALL 1/4-20 AVK CLOSED END INTO GUIDE/PACK. USE 1/4-20 HEX BOLT TO FASTEN GLIDE/PACK TO PRESSURE HOUSING. BOTH ENDS.

THIS SHEET IS REFERENCE ONLY COPIED FROM 80K57281

6 0 12 24 SCALE: 1 1/2"= 1'

3 0 3 6 9 SCALE: 3"= 1'

SYM	ZONE	DESCRIPTION	DATE	APPROVAL
		REVISIONS		

SIGNATURES		DATE
DRAFTER	T. JOBE	05/06/11
CHECKER	D. MAY	05/06/11
ENGINEER	A. JACQUES	05/06/11
	R. WITHERSPOON	05/06/11
	R. FRANCO	05/06/11
SUBMITTED	T.O. ADAMS	05/06/11
APPROVED	E.A. THAXTON	05/06/11

NATIONAL AERONAUTICS AND SPACE ADMINISTRATION
JOHN F. KENNEDY SPACE CENTER, NASA
KENNEDY SPACE CENTER, FLORIDA

ASSEMBLY DRAWINGS

MPPU REFURBISHMENT DESIGN
ENVIRONMENTAL CONTROL SYSTEM
FILTER PRESSURE HOUSING

SIZE F | DWG. NO. 584F0301001 | REV –

TITLE | PROJ. NO. 95255 | SHEET | OF

M-12A

P:\95255\DRAWINGS\MECH\M-12A.DWG 24-FEB-2011 10:19 JOBETL

FOR ANY PURPOSE OTHER THAN IN CONNECTION WITH A DEFINITELY RELATED GOVERNMENT PROCUREMENT OPERATION, THE UNITED STATES GOVERNMENT THEREBY INCURS NO RESPONSIBILITY NOR ANY OBLIGATION WHATSOEVER; AND THE FACT THAT THE GOVERNMENT MAY HAVE FORMULATED, FURNISHED, OR IN ANY WAY SUPPLIED THE SAID DRAWINGS, SPECIFICATIONS OR ANY OTHER DATA IS NOT TO BE REGARDED BY IMPLICATION OR OTHERWISE IN ANY MANNER LICENSING THE HOLDER OR ANY OTHER PERSONS OR CORPORATION, OR CONVEYING ANY RIGHTS OR PERMISSION TO MANUFACTURE, USE, OR SELL ANY PATENTED INVENTION THAT IN ANY WAY BE RELATED THERETO.

EAR 99 - NO LICENSE REQUIRED

The Information contained in this document is technical in content, but not technical data as defined by the International Traffic in Arms (ITAR) or the Export Administration Regulations (EAR), and therefore is EAR 99 NLR, meaning no license required, suitable for public release. (General Prohibition Six (Embargo) applies to all items subject to the EAR, i.e. items on the CCL and within EAR 99 NLR. You may not make an export or reexport contrary to the provisions of part 746 (Embargos and Other Special Controls) of the EAR and 22 CFR part 126.1 of the ITAR).

EDDR # 113043 : NASA KSC Export Control Office (321- 867-9209)

EAR 99

DETAIL DW M-12
SCALE: 1"=1'-0"
MAT'L: .190 ALUM 5052-H32
QTY: 4 PER UNIT

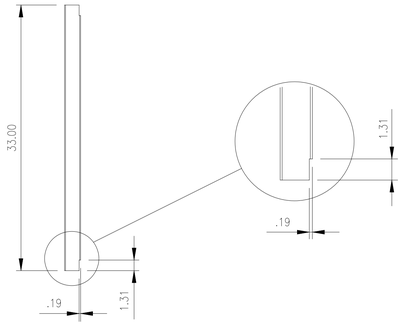

DETAIL EF M-12
SCALE: 1"=1'-0"
MAT'L: 2x2x.125 WALL
ALUM TUBE 6061-T6
QTY: 2 PER UNIT

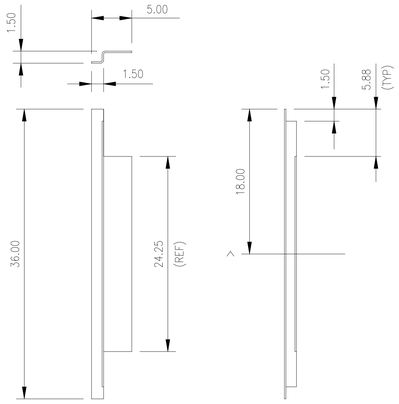

DETAIL DV M-12
SCALE: 1"=1'-0"
MAT'L: .190 ALUM 5052-H32
QTY: 4 PER UNIT

DETAIL DY M-12
SCALE: 1"=1'-0"
MAT'L: .190 ALUM 5052-H32
QTY: 2 PER UNIT

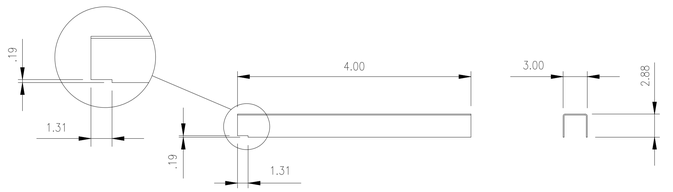

P/N	A	QTY	EEI P/N
DZ	20.13	6	304-3P47
EE	28.88	6	304-3P48

EEI P/N'S ARE "OR APVD EQUAL"

DETAIL DZ M-12 EE M-12
SCALE: NONE
MAT'L: .100 ALUM 5052-H32

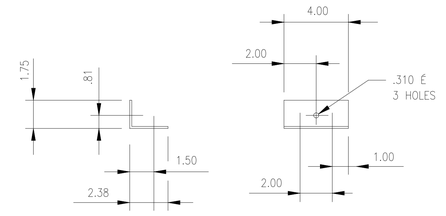

DETAIL EM M-12A
SCALE: 1"=1'-0"
MAT'L: .125 ALUM 5052-H32
QTY: 8 PER UNIT
NOTE: FURNISH LOOSE
SHIP WITH WELDMENT

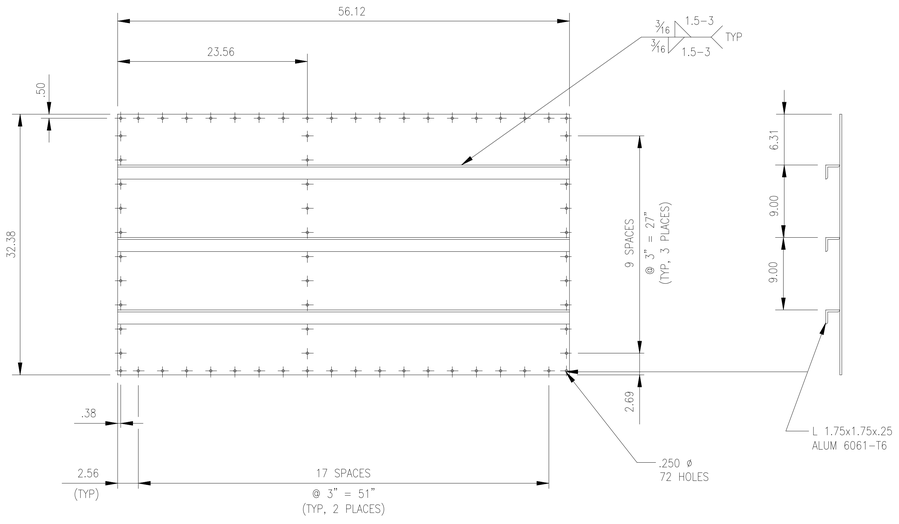

FILTER ACCESS DOOR

DETAIL EK M-12A
SCALE: 1"=1'-0"
MAT'L: .25 ALUM 6061-T6
QTY: ONE PER UNIT

REAR PANEL

DETAIL EL M-12A
SCALE: 1"=1'-0"
MAT'L: .25 ALUM 6061-T6
QTY: ONE PER UNIT
NOTE: SAME AS DOOR EXCEPT
OPPOSITE HAND

DETAIL	L	QTY
EA	33.00	2
EB	52.00	6
EC	48.31	3
ED	27.63	1

DETAIL EA M-12 EB M-12 EC M-12 ED M-12
SCALE: NONE
MAT'L: .50 ø ALUM ROD 5052-H32

THIS SHEET IS REFERENCE ONLY COPIED FORM 80K57281

1' 0 1' 2'
SCALE: 1"=1' 0"

SYM	ZONE	DESCRIPTION	DATE	APPROVAL
		REVISIONS		

SIGNATURES	DATE
DRAFTER	
CHECKER	
ENGINEER	
SUBMITTED	
APPROVED	DATE
TITLE	

NATIONAL AERONAUTICS AND SPACE ADMINISTRATION
JOHN F. KENNEDY SPACE CENTER, NASA
KENNEDY SPACE CENTER, FLORIDA

ASSEMBLY DRAWINGS
MPPU REFURBISHMENT DESIGN
ENVIRONMENTAL CONTROL SYSTEM
FILTER HOUSING DETAILS

M-12B

SIZE	DWG. NO.	REV
F	584F0301001	-
PROJ. NO. 95255	SHEET	OF

P:\95255\DRAWINGS\MECH\M-12B.DWG 24-FEB-2011 10:21 JOBEIL

KSC FORM 1-11 (REV. 3/76) (C/G 3/93)

EAR 99

FOR ANY PURPOSE OTHER THAN IN CONNECTION WITH A DEFINITELY RELATED GOVERNMENT PROCUREMENT OPERATION, THE UNITED STATES GOVERNMENT THEREBY INCURS NO RESPONSIBILITY NOR ANY OBLIGATION WHATSOEVER; AND THE FACT THAT THE GOVERNMENT MAY HAVE FORMULATED, FURNISHED, OR IN ANY WAY SUPPLIED THE SAID DRAWINGS, SPECIFICATIONS OR ANY OTHER DATA IS NOT TO BE REGARDED BY IMPLICATION OR OTHERWISE IN ANY MANNER LICENSING THE HOLDER OR ANY OTHER PERSONS OR CORPORATION, OR CONVEYING ANY RIGHTS OR PERMISSION TO MANUFACTURE, USE, OR SELL ANY PATENTED INVENTION THAT IN ANY WAY BE RELATED THERETO.

EAR 99 – NO LICENSE REQUIRED

The information contained in this document is technical in content, but not technical data as defined by the International Traffic in Arms (ITAR) or the Export Administration Regulations (EAR), and therefore is EAR 99 NLR, no export license required, suitable for public release. (General Prohibition Six (Embargo) applies to all items subject to the EAR, i.e. items on the CCL and within EAR 99 NLR. You may not make an export or reexport contrary to the provisions of part 746 (Embargos and Other Special Controls) of the EAR and 22 CFR part 126.1 of the ITAR).

EDDR # 113043 : NASA KSC Export Control Office (321- 867-9209)

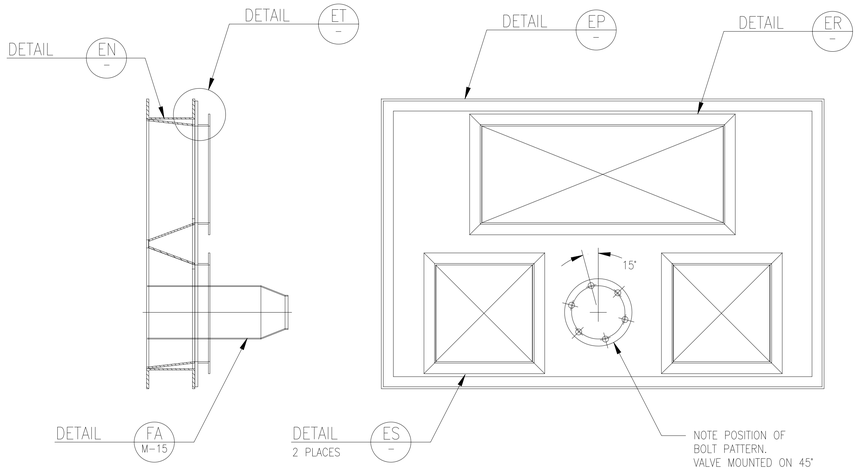

CONSTRUCTION NOTE:
ATTACH FLANGE AFTER PIPE IS WELDED IN. NOTE ORIENTATION SHOWN ACCOMPANING VIEW.

DETAIL CJ M-9
SCALE: 1 1/2"=1'-0"

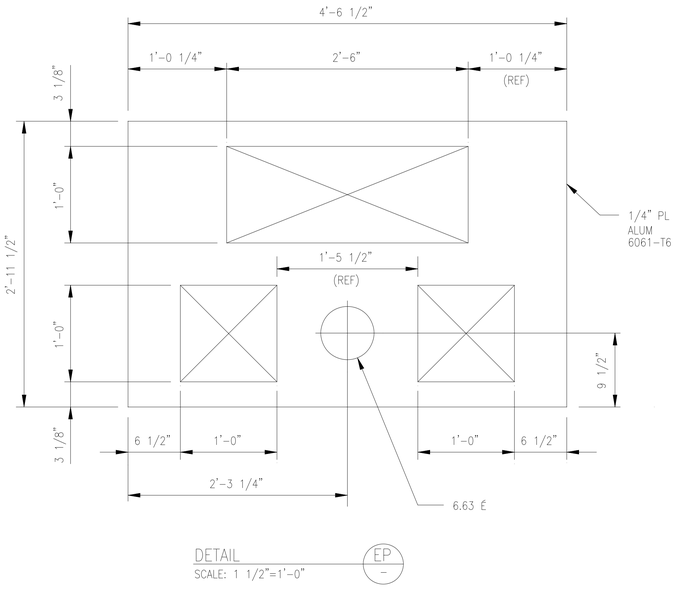

DETAIL EP –
SCALE: 1 1/2"=1'-0"

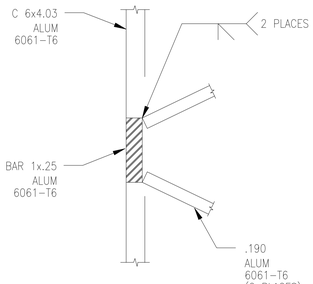

DETAIL EV –
SCALE: FULL

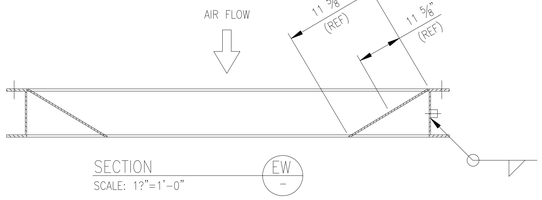

SECTION EW –
SCALE: 1?"=1'-0"

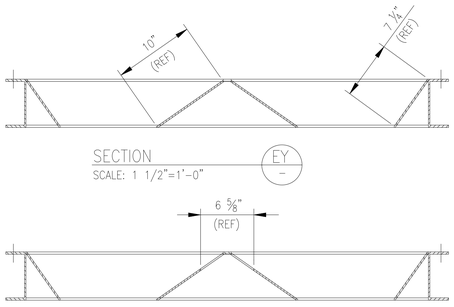

SECTION EY –
SCALE: 1 1/2"=1'-0"

SECTION EZ –
SCALE: 1 1/2"=1'-0"

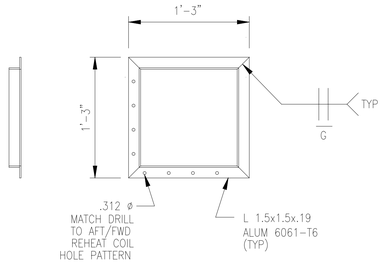

DETAIL ES –
SCALE: 1 1/2"=1'-0"
QTY: 2 PER UNIT

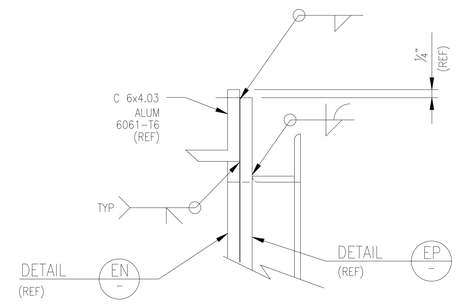

DETAIL ET –
SCALE: 6"=1'-0"

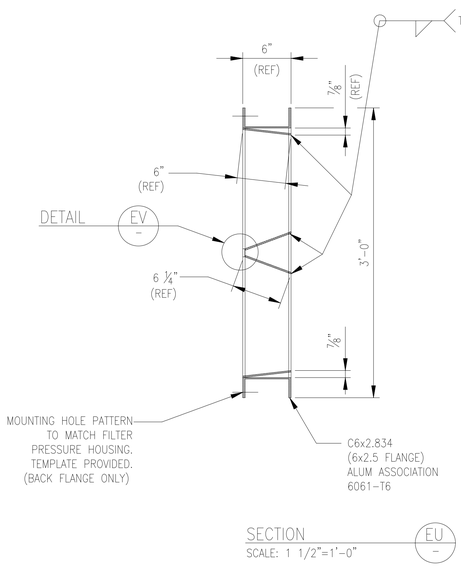

SECTION EU –
SCALE: 1 1/2"=1'-0"

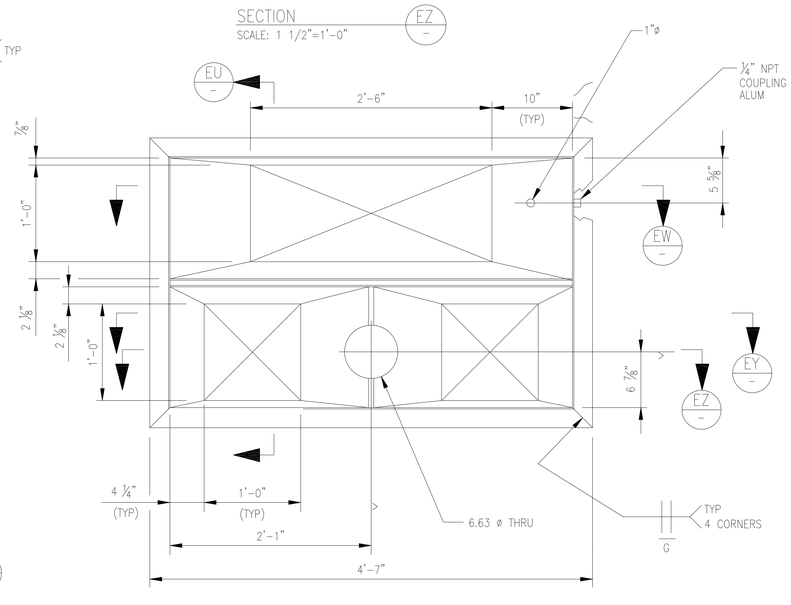

DETAIL EN –
SCALE: 1 1/2"=1'-0"

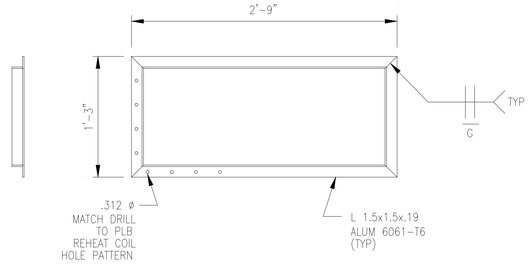

DETAIL ER –
SCALE: 1 1/2"=1'-0"
QTY: ONE PER UNIT

THIS SHEET IS REFERENCE ONLY COPIED FROM 80K57281

6 0 12 24
SCALE: 1 1/2"=1'

0 2 4 6
SCALE: 6"=1'

1 0 1 2
SCALE: FULL

SYM	ZONE	DESCRIPTION	DATE	APPROVAL
		REVISIONS		

SIGNATURES	DATE
DRAFTER	
CHECKER	
ENGINEER	
SUBMITTED	
APPROVED	DATE
TITLE	

NATIONAL AERONAUTICS AND SPACE ADMINISTRATION
JOHN F. KENNEDY SPACE CENTER, NASA
KENNEDY SPACE CENTER, FLORIDA

ASSEMBLY DRAWINGS
MPPU REFURBISHMENT DESIGN
ENVIRONMENTAL CONTROL SYSTEM
BAFFLE PLATE WELDMENT ASSY

SIZE	DWG. NO.	REV.
F	584F0301001	–
PROJ. NO. 95255	SHEET	OF

M-13

P:\95255\DRAWINGS\MECH\M-13.DWG 28-JAN-2011 09:05 JOBETL

KSC FORM 1-11 (REV. 3/76) (C/G 3/93)

FOR ANY PURPOSE OTHER THAN IN CONNECTION WITH A DEFINITELY RELATED GOVERNMENT PROCUREMENT OPERATION, THE UNITED STATES GOVERNMENT THEREBY INCURS NO RESPONSIBILITY NOR ANY OBLIGATION WHATSOEVER; AND THE FACT THAT THE GOVERNMENT MAY HAVE FORMULATED, FURNISHED, OR IN ANY WAY SUPPLIED THE SAID DRAWINGS, SPECIFICATIONS OR ANY OTHER DATA IS NOT TO BE REGARDED BY IMPLICATION OR OTHERWISE IN ANY MANNER LICENSING THE HOLDER OR ANY OTHER PERSONS OR CORPORATION, OR CONVEYING ANY RIGHTS OR PERMISSION TO MANUFACTURE, USE, OR SELL ANY PATENTED INVENTION THAT IN ANY WAY BE RELATED THERETO.

EAR 99 – NO LICENSE REQUIRED

The information contained in the documents is technical in content, but not technical data as defined by the International Traffic in Arms (ITAR) or the Export Administration Regulations (EAR), and therefore is EAR 99 NLR. Accordingly, no export license required, suitable for public release. (General Prohibition Six (Embargo) applies to all items subject to the EAR, i.e. items on the CCL and within EAR 99 NLR. You may not make an export or reexport contrary to the provisions of part 746 (Embargoes and Other Special Controls) of the EAR and 22 CFR part 126.1 of the ITAR).

EDDR # 113043 : NASA KSC Export Control Office (321- 867-9209)

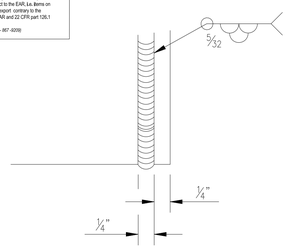

DETAIL SCALE: FULL — CA – / CA M-7 / CA M-8 / CA M-15 / CA M15A

NOTE: BEAD PER SAE AS5131

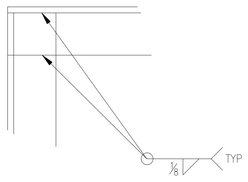

DETAIL SCALE: 6"=1'-0" — FC –

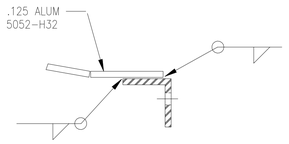

DETAIL SCALE: 6"=1'-0" — FB –

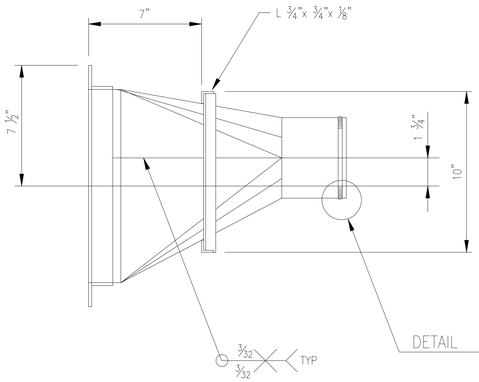

DETAIL — CA –

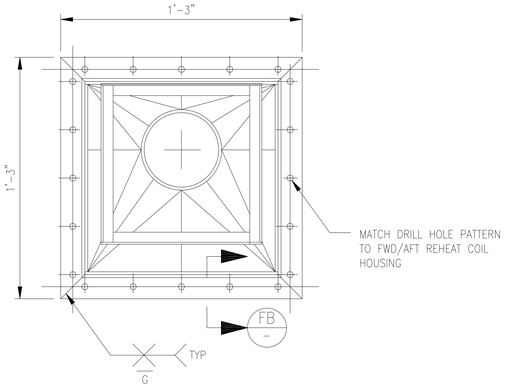

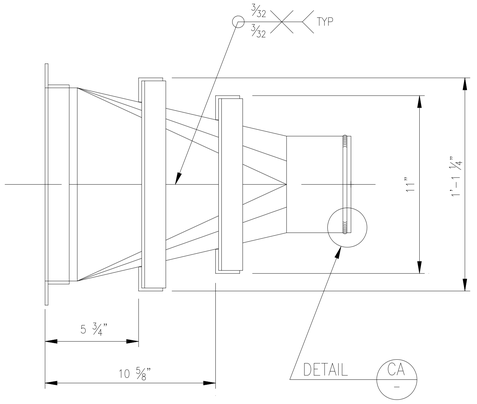

DETAIL — CA –

DETAIL — FC –

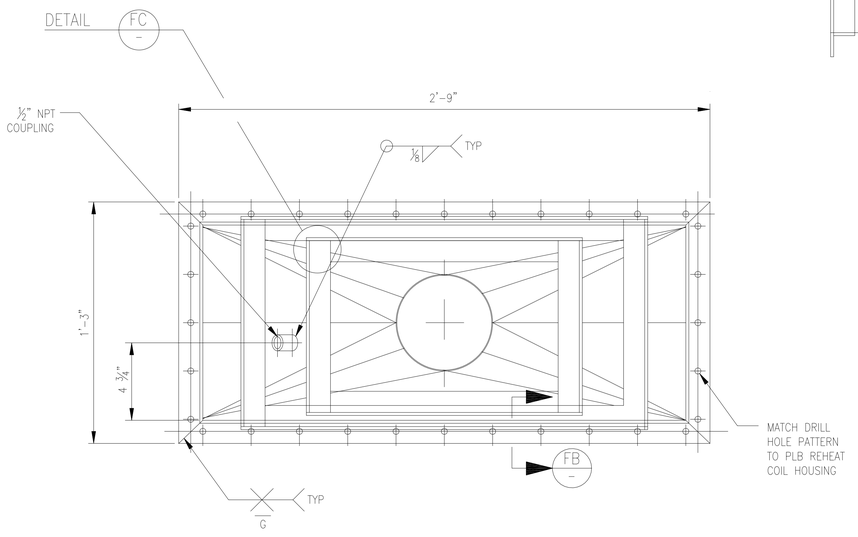

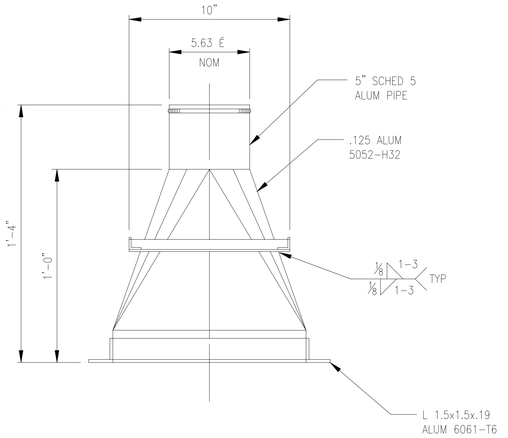

DETAIL SCALE: 3"=1'-0" QTY: 2 PER UNIT — CK M-9

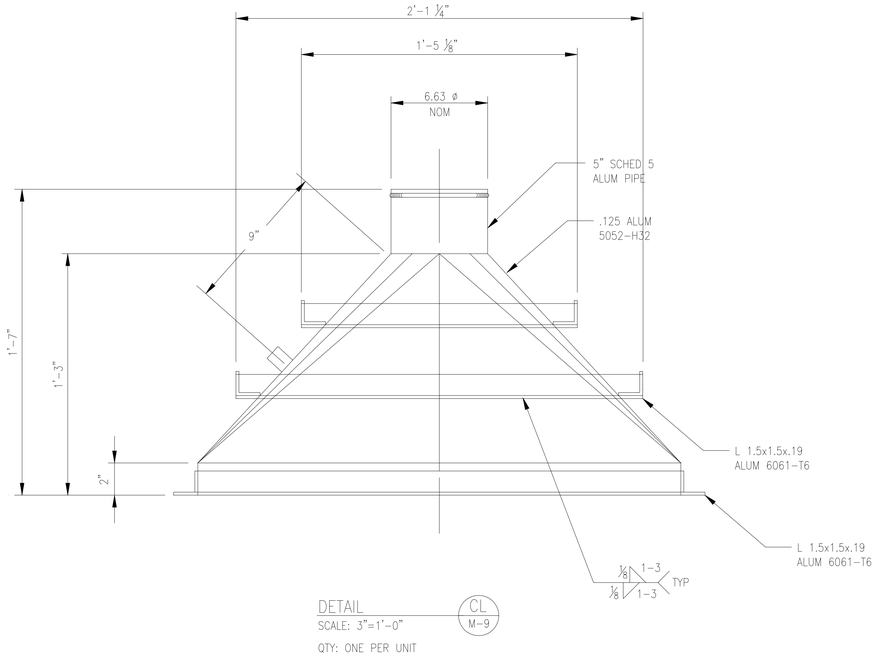

DETAIL SCALE: 3"=1'-0" QTY: ONE PER UNIT — CL M-9

THIS SHEET IS REFERENCE ONLY COPIED FROM 80K57281

3 0 3 6 9
SCALE: 3" = 1'

0 2 4 6
SCALE: 6" = 1'

SYM	ZONE	DESCRIPTION	DATE	APPROVAL

REVISIONS

SIGNATURES	DATE
DRAFTER	
CHECKER	
ENGINEER	
SUBMITTED	
APPROVED	DATE
TITLE	

NATIONAL AERONAUTICS AND SPACE ADMINISTRATION
JOHN F. KENNEDY SPACE CENTER, NASA
KENNEDY SPACE CENTER, FLORIDA

ASSEMBLY DRAWINGS

MPPU REFURBISHMENT DESIGN
ENVIRONMENTAL CONTROL SYSTEM
HEATER TRANSITION DETAILS

SIZE F | DWG. NO. 584F0301001 | REV –

PROJ. NO. 95255 | SHEET | OF

M-14

P:\95255\DRAWINGS\MECH\M-14.DWG 28-JAN-2011 09:27 JOBETL

FOR ANY PURPOSE OTHER THAN IN CONNECTION WITH A DEFINITELY RELATED GOVERNMENT PROCUREMENT OPERATION, THE UNITED STATES GOVERNMENT THEREBY INCURS NO RESPONSIBILITY NOR ANY OBLIGATION WHATSOEVER; AND THE FACT THAT THE GOVERNMENT MAY HAVE FORMULATED, FURNISHED, OR IN ANY WAY SUPPLIED THE SAID DRAWINGS, SPECIFICATIONS OR ANY OTHER DATA IS NOT TO BE REGARDED BY IMPLICATION OR OTHERWISE IN ANY MANNER LICENSING THE HOLDER OR ANY OTHER PERSONS OR CORPORATION, OR CONVEYING ANY RIGHTS OR PERMISSION TO MANUFACTURE, USE, OR SELL ANY PATENTED INVENTION THAT IN ANY WAY BE RELATED THERETO.

EAR 99 – NO LICENSE REQUIRED

The information contained in this document is technical in content, but not technical data as defined by the International Traffic in Arms (ITAR) or the Export Administration Regulations (EAR), and therefore is EAR 99 NLR, meaning no license required, suitable for public release. (General Prohibition Six (Embargo) applies to all items subject to the EAR, i.e. items on the CCL and within EAR 99 NLR. You may not make an export or reexport contrary to the provisions of part 746 (Embargos and Other Special Controls) of the EAR and 22 CFR part 126.1 of the ITAR).

EDDR # 113043 : NASA KSC Export Control Office (321- 867-9209)

EAR 99

DISCHARGE DUCT SCHEDULE

REF DETAIL	QTY	A	B	C	D	E	L 1	L 2	L 3	REMARKS
BL	2	21.63	32.63	5x4 CONC REDUCER	5" SCH 5 PIPE	4" BUTTERFLY VALVE (A524781 OR A524783)	37.25	8.75	3	OUTLET 1 & 3
BM	1	26.38	29.38	6x5 CONC REDUCER	6" SCH 5 PIPE	5" BUTTERFLY VALVE (A524782)	34	8.75	3	OUTLET 2

SPECIFIC NOTES:

MOD 25 — SEE SHEET V-1A FOR REHABILITATION ACTIVITY.

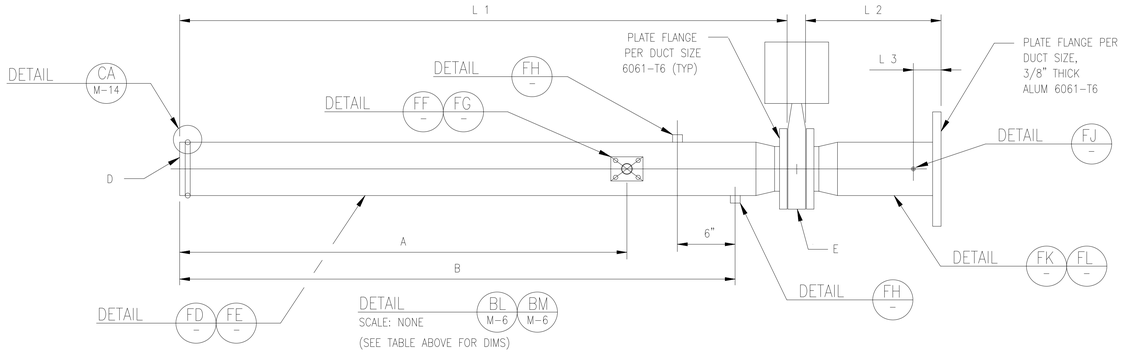

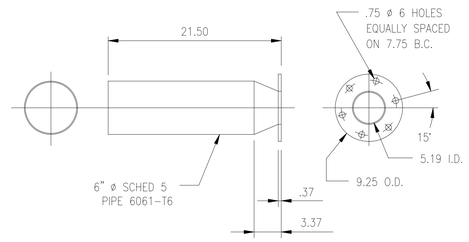

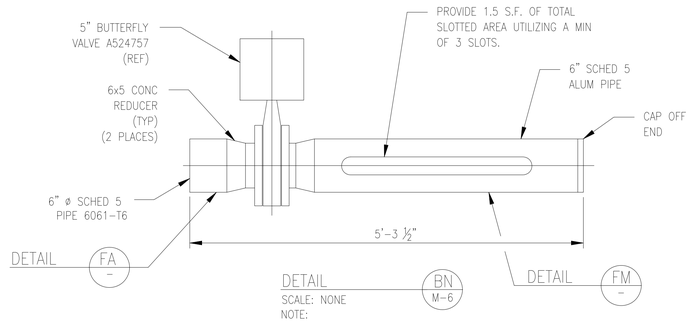

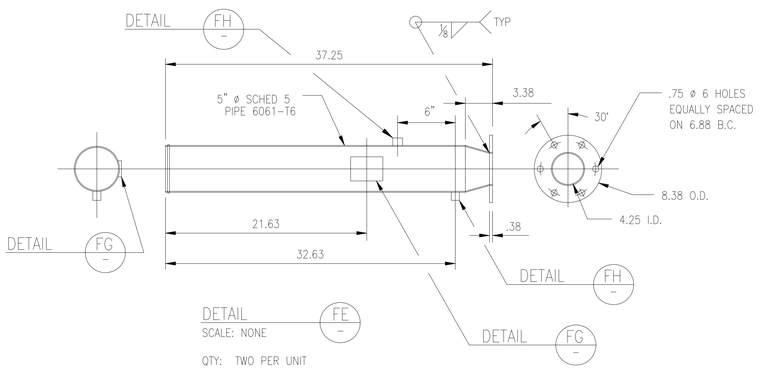

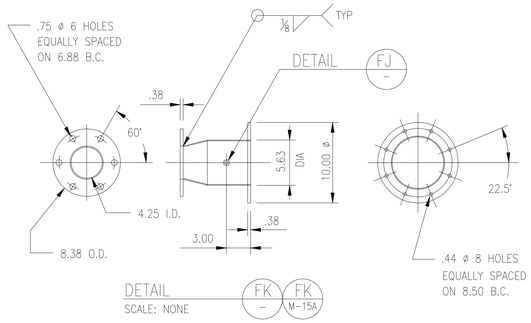

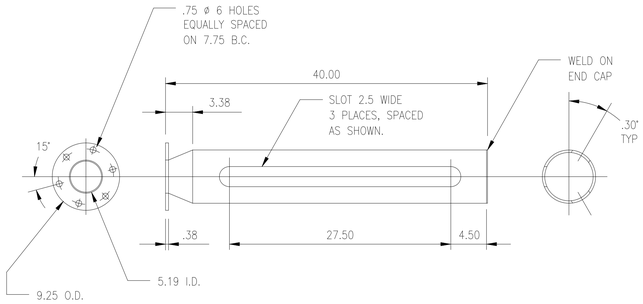

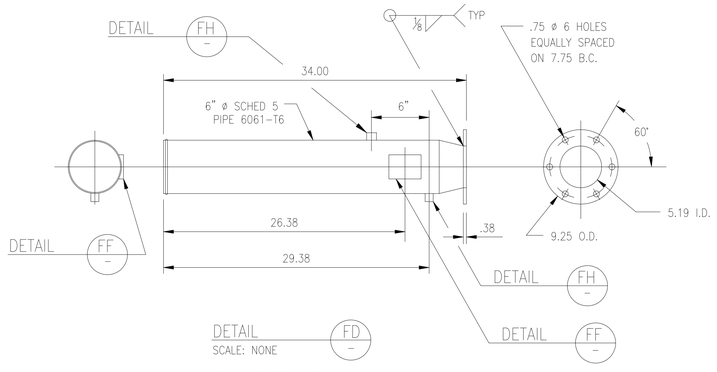

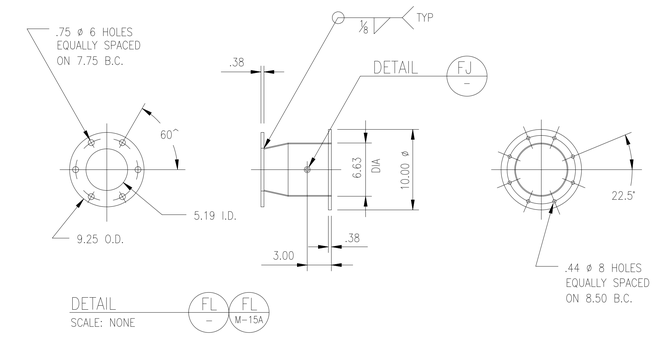

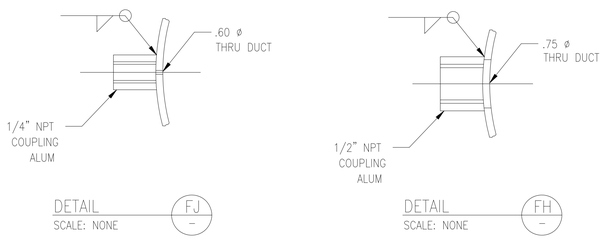

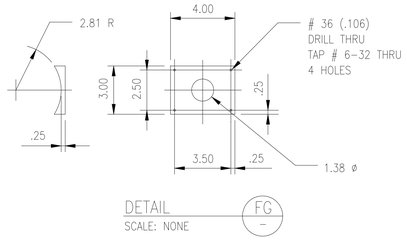

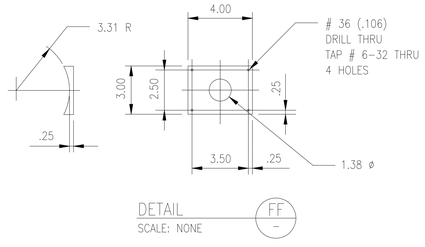

THIS SHEET IS REFERENCE ONLY COPIED FROM 80K57281

3 0 3 6 9
SCALE : 3" = 1'

SYM	ZONE	DESCRIPTION	DATE	APPROVAL

REVISIONS

SIGNATURES	DATE
DRAFTER	
CHECKER	
ENGINEER	
SUBMITTED	
APPROVED	DATE

NATIONAL AERONAUTICS AND SPACE ADMINISTRATION
JOHN F. KENNEDY SPACE CENTER, NASA
KENNEDY SPACE CENTER, FLORIDA

ASSEMBLY DRAWINGS

MPPU REFURBISHMENT DESIGN ENVIRONMENTAL CONTROL SYSTEM DUCTING DETAILS

TITLE

SIZE F | DWG. NO. 584F0301001 | REV –

PROJ. NO. 95255 | SHEET OF

M-15

P:\95255\DRAWINGS\MECH\M-15.DWG 28-JAN-2011 09:54 JOBETL

KSC FORM 1-11 (REV. 3/76) (C/G 3/93)

EAR 99

FOR ANY PURPOSE OTHER THAN IN CONNECTION WITH A DEFINITELY RELATED GOVERNMENT PROCUREMENT OPERATION, THE UNITED STATES GOVERNMENT THEREBY INCURS NO RESPONSIBILITY NOR ANY OBLIGATION WHATSOEVER; AND THE FACT THAT THE GOVERNMENT MAY HAVE FORMULATED, FURNISHED, OR IN ANY WAY SUPPLIED THE SAD DRAWINGS, SPECIFICATIONS OR ANY OTHER DATA IS NOT TO BE REGARDED BY IMPLICATION OR OTHERWISE IN ANY MANNER LICENSING THE HOLDER OR ANY OTHER PERSONS OR CORPORATION, OR CONVEYING ANY RIGHTS OR PERMISSION TO MANUFACTURE, USE, OR SELL ANY PATENTED INVENTION THAT IN ANY WAY BE RELATED THERETO.

EAR 99 – NO LICENSE REQUIRED

The information contained in this document is technical in content, but not technical data as defined by the International Traffic in Arms (ITAR) or the Export Administration Regulations (EAR), and therefore is EAR 99 NLR, no export license required, suitable for public release. (General Prohibition Six (Embargo) applies to all items subject to the EAR, i.e. items on the CCL and within EAR 99 NLR. You may not make an export or reexport contrary to the provisions of part 746 (Embargos and Other Special Controls) of the EAR and 22 CFR part 126.1 of the ITAR).

EDDR # 113043 : NASA KSC Export Control Office (321- 867-9209)

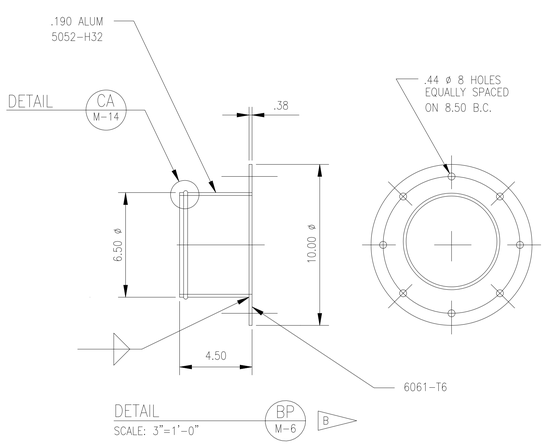

QTY: 2 PER UNIT

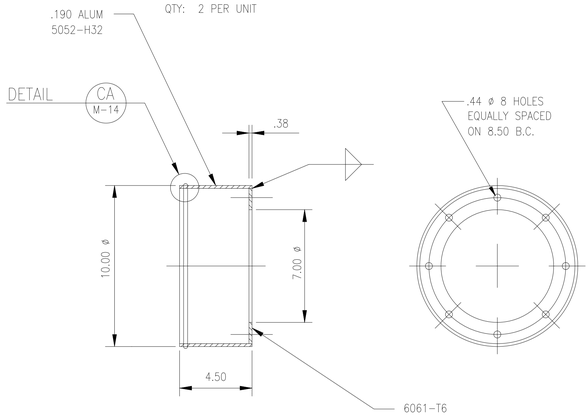

QTY: ONE PER UNIT

SPECIFIC NOTES:

A. REMOVE ALL BURRS AND BREAK SHARP EDGES.

B PREPARE AND PAINT IN ACCORDANCE WITH GENERAL NOTES FROM SHEET V–1A.

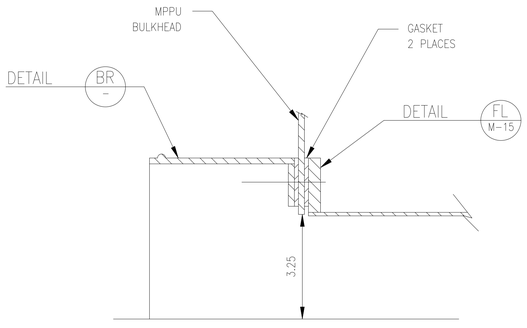

DETAIL
SCALE: 6"=1'–0"
CE
M–2

QTY: ONE PER UNIT

ASSEMBLY

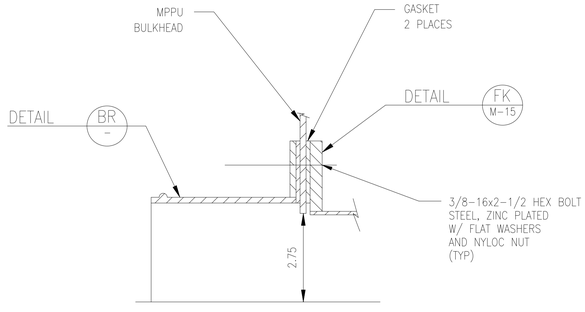

DETAIL
SCALE: 6"=1'–0"
CD
M–2

TYP: 2 PLACES

ASSEMBLY

THIS SHEET IS REFERENCE ONLY COPIED FROM 80K57281

SYM	ZONE	DESCRIPTION	DATE	APPROVAL
		REVISIONS		

SIGNATURES	DATE
DRAFTER	
CHECKER	
ENGINEER	
SUBMITTED	
APPROVED	DATE
TITLE	

NATIONAL AERONAUTICS AND SPACE ADMINISTRATION
JOHN F. KENNEDY SPACE CENTER, NASA
KENNEDY SPACE CENTER, FLORIDA

ASSEMBLY DRAWINGS

MPPU REFURBISHMENT DESIGN
ENVIRONMENTAL CONTROL SYSTEM
DUCTING DETAILS

SIZE	DWG. NO.	REV
F	584F0301001	–
	PROJ. NO. 95255	SHEET OF

M–15A

P:\95255\DRAWINGS\MECH\M–15A.DWG | 28–JAN–2011 10:01 | JOBETL

KSC FORM 1–11 (REV. 3/76) (C/G 3/93)

FOR ANY PURPOSE OTHER THAN IN CONNECTION WITH A DEFINITELY RELATED GOVERNMENT PROCUREMENT OPERATION, THE UNITED STATES GOVERNMENT THEREBY INCURS NO RESPONSIBILITY NOR ANY OBLIGATION WHATSOEVER; AND THE FACT THAT THE GOVERNMENT MAY HAVE FORMULATED, FURNISHED, OR IN ANY WAY SUPPLIED THE SAID DRAWINGS, SPECIFICATIONS OR ANY OTHER DATA IS NOT TO BE REGARDED BY IMPLICATION OR OTHERWISE IN ANY MANNER LICENSING THE HOLDER OR ANY OTHER PERSONS OR CORPORATION, OR CONVEYING ANY RIGHTS OR PERMISSION TO MANUFACTURE, USE, OR SELL ANY PATENTED INVENTION THAT IN ANY WAY BE RELATED THERETO.

EAR 99 – NO LICENSE REQUIRED

The information contained in this document is technical in content, but not technical data as defined by the International Traffic in Arms (ITAR) or the Export Administration Regulations (EAR), and therefore is EAR 99 NLR, meaning no license required, suitable for public release. (General Prohibition Six (Embargo) applies to all items subject to the EAR, i.e. items on the CCL and within EAR 99 NLR. You may not make an export or reexport contrary to the prohibitions of part 746 (Embargos and Other Special Controls) of the EAR and 22 CFR part 126.1 of the ITAR).

EDDR # 113043 : NASA KSC Export Control Office (321- 867-9209)

EAR 99

SPECIFIC NOTES:

A. REMOVE ALL BURRS AND BREAK SHARP EDGES.

B PREPARE AND PAINT IN ACCORDANCE WITH GENERAL NOTES FROM SHEET V-1A.

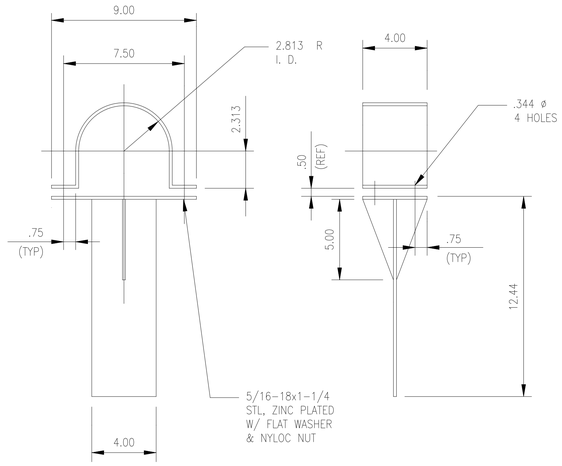

BRACKET, OUTLET 1 & 3
50 DISCHARGE PIPE

DETAIL ST M-6 B
SCALE: 3"=1'-0"

MATL: 11 GA STEEL

QTY: 2 PER UNIT

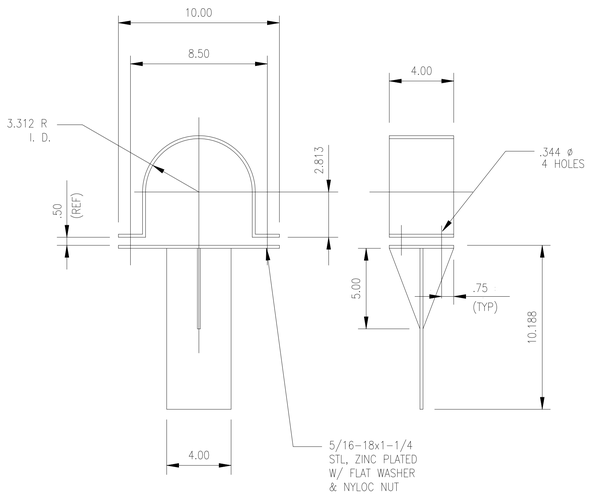

BRACKET, PRESSURE DUMP
60 PIPE

DETAIL SU M-6 B
SCALE: 3"=1'-0"

MATL: 11 GA STEEL

QTY: ONE PER UNIT

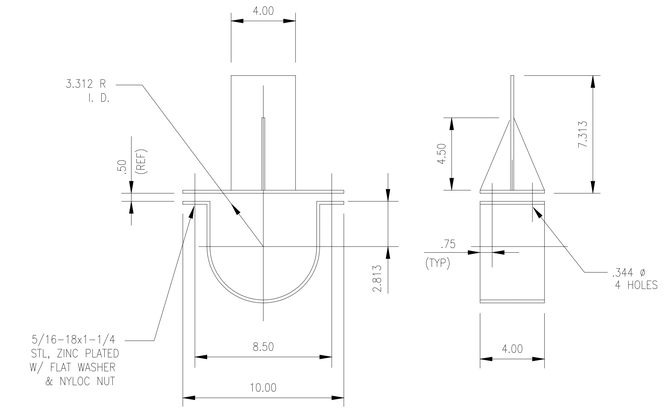

BRACKET, OUTLET 2 DISCHARGE
60 PIPE

DETAIL SV M-6 B
SCALE: 3"=1'-0"

MATL: 11 GA STEEL

QTY: ONE PER UNIT

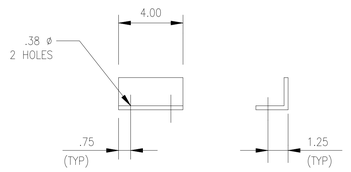

MOUNTING ANGLE

DETAIL WH M-6 B
SCALE: 3"=1'-0"

MATL: ALUM L 2x2x.25
6061-T6

QTY: 2 PER UNIT

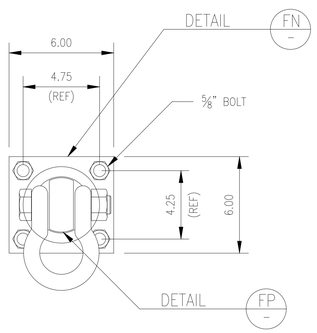

SWIVEL,
TIE DOWN ASSY

DETAIL FM M-2
SCALE: 3"=1'-0"

QTY: 4 PER UNIT

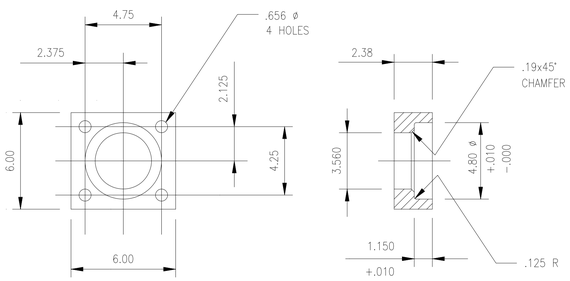

SWIVEL PLATE

DETAIL FN – B
SCALE: 3"=1'-0"

MATL: 4140 STEEL

QTY: 4 PER UNIT

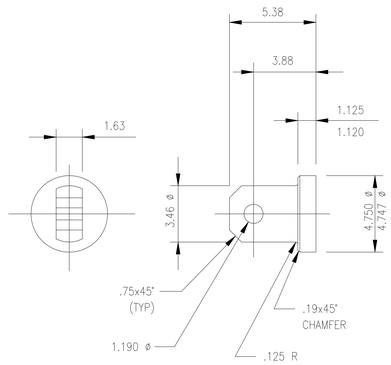

SWIVEL BAR

DETAIL FP – B
SCALE: 3"=1'-0"

MATL: 4140 STEEL

QTY: 4 PER UNIT

THIS SHEET IS REFERENCE ONLY COPIED FROM 80K57281

3 0 3 6 9
SCALE: 3" = 1'

SYM	ZONE	DESCRIPTION	DATE	APPROVAL
		REVISIONS		

SIGNATURES	DATE
DRAFTER	
CHECKER	
ENGINEER	
SUBMITTED	
APPROVED	DATE
TITLE	

NATIONAL AERONAUTICS AND SPACE ADMINISTRATION
JOHN F. KENNEDY SPACE CENTER, NASA
KENNEDY SPACE CENTER, FLORIDA

ASSEMBLY DRAWINGS
MPPU REFURBISHMENT DESIGN
ENVIRONMENTAL CONTROL SYSTEM
BRACKETS & MACHINED PARTS

M-15B

SIZE	DWG. NO.	REV
F	584F0301001	—
PROJ. NO. 95255	SHEET	OF

P:\95255\DRAWINGS\MECH\M-15B.DWG 24-FEB-2011 10:40 JOBETL

KSC FORM 1-11 (REV. 3/76) (C/G 3/93)

EAR 99

FOR ANY PURPOSE OTHER THAN IN CONNECTION WITH A DEFINITELY RELATED GOVERNMENT PROCUREMENT OPERATION, THE UNITED STATES GOVERNMENT THEREBY INCURS NO RESPONSIBILITY NOR ANY OBLIGATION WHATSOEVER, AND THE FACT THAT THE GOVERNMENT MAY HAVE FORMULATED, FURNISHED, OR IN ANY WAY SUPPLIED THE SAID DRAWINGS, SPECIFICATIONS OR ANY OTHER DATA IS NOT TO BE REGARDED BY IMPLICATION OR OTHERWISE IN ANY MANNER LICENSING THE HOLDER OR ANY OTHER PERSONS OR CORPORATION, OR CONVEYING ANY RIGHTS OR PERMISSION TO MANUFACTURE, USE, OR SELL ANY PATENTED INVENTION THAT IN ANY WAY BE RELATED THERETO.

EAR 99 - NO LICENSE REQUIRED

The information contained in the document is technical in content, but not technical data as defined by the International Traffic in Arms Regulations (ITAR) or the Export Administration Regulations (EAR), and therefore is EAR 99 NLR, no export license required, suitable for public release. (General Prohibition Six (Embargo) applies to all items subject to the EAR, i.e. items on the CCL and within EAR 99 NLR. You may not make an export or reexport contrary to the provisions of part 746 (Embargos and Other Special Controls) of the EAR and 22 CFR part 126.1 of the ITAR).

EDDR # 113043 : NASA KSC Export Control Office (321-867-6208)

EAR 99

SPECIFIC NOTES:

A. REMOVE ALL BURRS AND BREAK SHARP EDGES.

B. PREPARE AND PAINT IN ACCORDANCE WITH GENERAL NOTES FROM SHEET V-1A.

C. 4.50 ø HOLE FOR A524798 DIFFERENTIAL PRESSURE GAUGE.

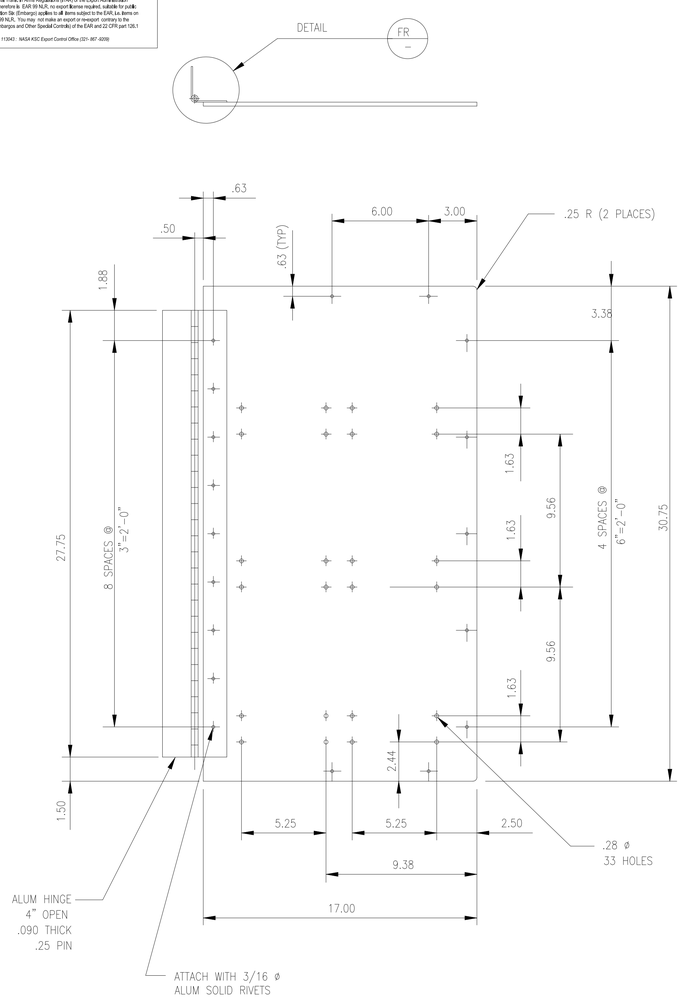

DETAIL AK M-4 AK M-18 TA E-25A B
SCALE: 3"=1'-0"
MATL: .25 ALUM 5052-H32
QTY: ONE PER UNIT

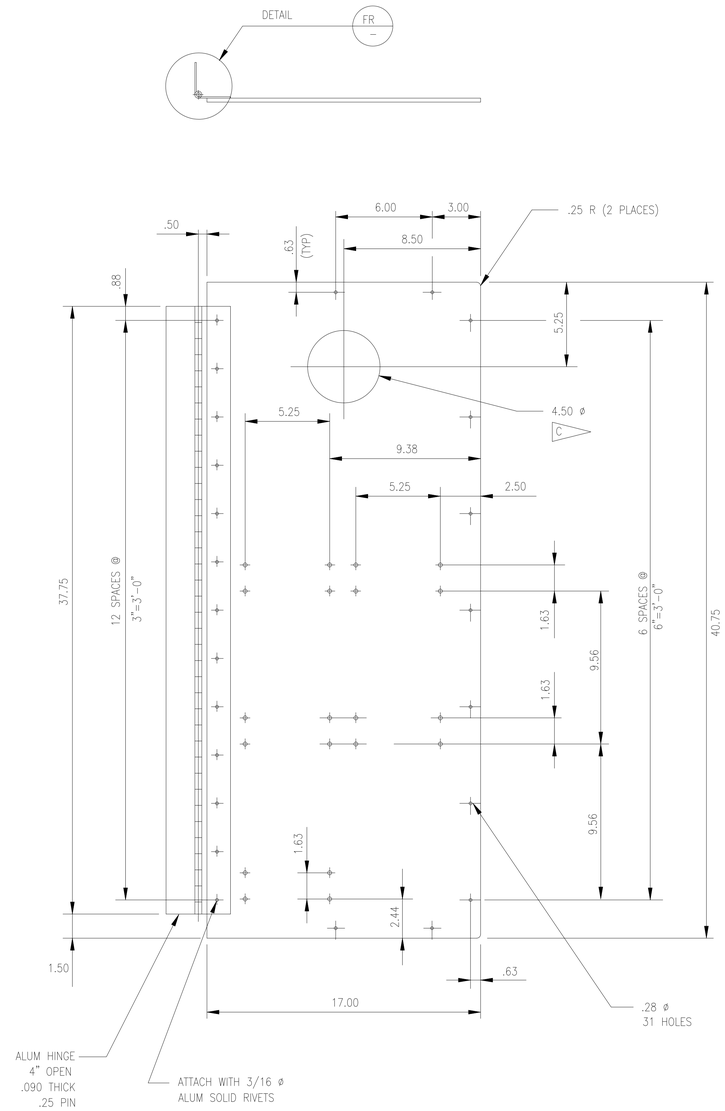

DETAIL AL M-4 AL M-18 TB E-25A B
SCALE: 3"=1'-0"
MATL: .25 ALUM 5052-H32
QTY: ONE PER UNIT

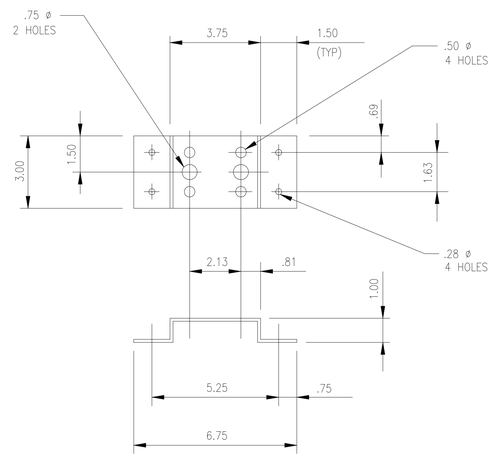

DETAIL TC E-25A B
SCALE: 3"=1'-0"
MATL: .25 ALUM 5052-H32
QTY: 11 PER UNIT

THIS SHEET IS REFERENCE ONLY COPIED FROM 80K57281

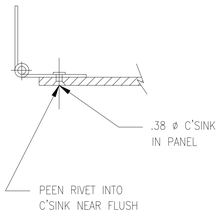

DETAIL FR
SCALE: NONE

3 0 3 6 9
SCALE: 3" = 1'

SYM	ZONE	DESCRIPTION	DATE	APPROVAL

REVISIONS

SIGNATURES	DATE
DRAFTER	
CHECKER	
ENGINEER	
SUBMITTED	
APPROVED	DATE
TITLE	

NATIONAL AERONAUTICS AND SPACE ADMINISTRATION
JOHN F. KENNEDY SPACE CENTER, NASA
KENNEDY SPACE CENTER, FLORIDA

ASSEMBLY DRAWINGS
MPPU REFURBISHMENT DESIGN
ENVIRONMENTAL CONTROL SYSTEM
ACCESS DOORS

SIZE F | DWG. NO. 584F0301001 | REV –
PROJ. NO. 95255 | SHEET OF

M-15C

P:\95255\DRAWINGS\MECH\M-15C.DWG 28-JAN-2011 11:05 JOBETL

KSC FORM 1-11 (REV. 3/76) (C/G 3/93)

EAR 99

FOR ANY PURPOSE OTHER THAN IN CONNECTION WITH A DEFINITELY RELATED GOVERNMENT PROCUREMENT OPERATION, THE UNITED STATES GOVERNMENT THEREBY INCURS NO RESPONSIBILITY NOR ANY OBLIGATION WHATSOEVER, AND THE FACT THAT THE GOVERNMENT MAY HAVE FORMULATED, FURNISHED, OR IN ANY WAY SUPPLIED THE SAID DRAWINGS, SPECIFICATIONS OR ANY OTHER DATA IS NOT TO BE REGARDED BY IMPLICATION OR OTHERWISE IN ANY MANNER LICENSING THE HOLDER OR ANY OTHER PERSONS OR CORPORATION, OR CONVEYING ANY RIGHTS OR PERMISSION TO MANUFACTURE, USE, OR SELL ANY PATENTED INVENTION THAT IN ANY WAY BE RELATED THERETO.

EAR 99 - NO LICENSE REQUIRED

This information contained in the document is technical in content, but not technical data as defined by the International Traffic in Arms Regulations (ITAR) or the Export Administration Regulations (EAR), and therefore is EAR 99 NLR, no export license required, suitable for public release. General Prohibition Six (Embargo) applies to all items subject to the EAR, i.e. items on the CCL and within EAR 99 NLR. You may not make an export or reexport contrary to the provisions of part 746 (Embargos and Other Special Controls) of the EAR and 22 CFR part 126.1 of the ITAR).

EDDR # 113043 : NASA KSC Export Control Office (321- 867- 6208)

EAR 99

SPECIFIC NOTES:

A. REMOVE ALL BURRS AND BREAK SHARP EDGES.

B. PREPARE AND PAINT IN ACCORDANCE WITH GENERAL NOTES FROM SHEET V-1A.

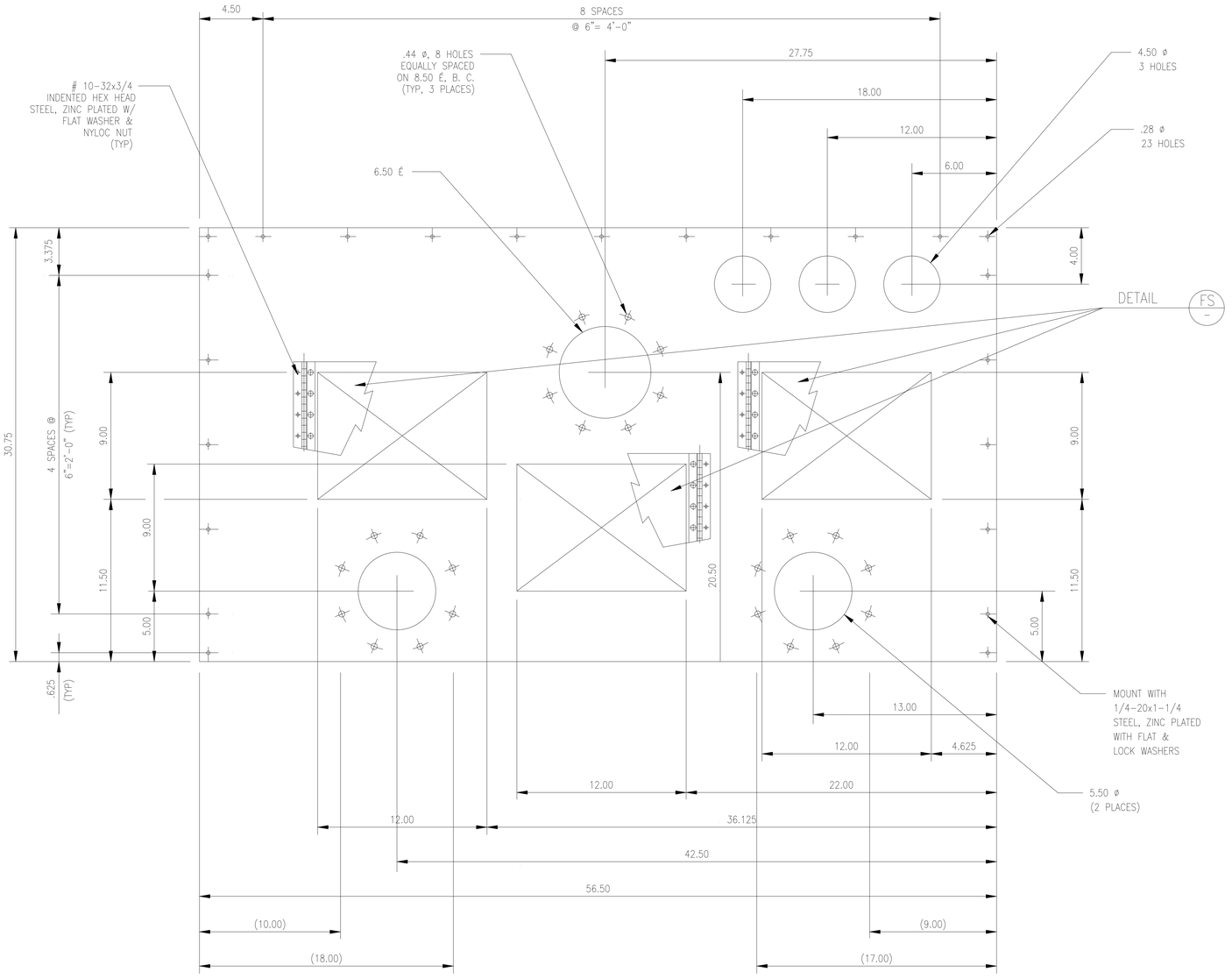

NOTE: DIMS IN ( ) ARE FOR NOTCHING OF ANGLE @ ASSEMBLY. NOT PART OF FABRICATION THIS PART.

DETAIL BB M-5 A B
SCALE: 3"=1'-0"

MATL: .190 ALUM
5052-H32

QTY: ONE PER UNIT

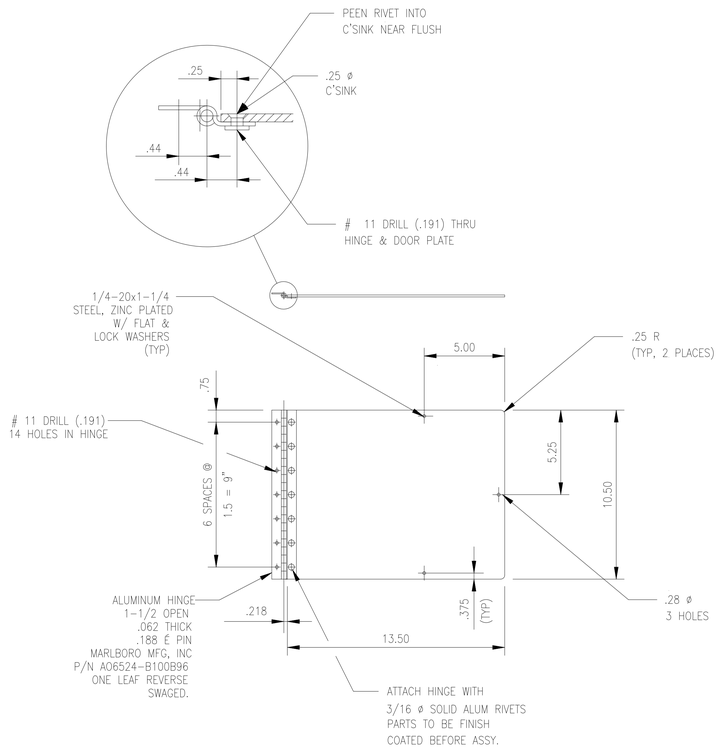

DETAIL FS A B
SCALE: 3"=1'-0"

MATL: .125 ALUM
5052-H32

QTY: 3 PER UNIT

NOTE: DOOR ASSY INSTALLED AFTER FINAL PAINT.

THIS SHEET IS REFERENCE ONLY COPIED FORM 80K57281

3 0 3 6 9
SCALE: 3" = 1'

SYM	ZONE	DESCRIPTION	DATE	APPROVAL

REVISIONS

SIGNATURES	DATE
DRAFTER	
CHECKER	
ENGINEER	
SUBMITTED	
APPROVED	DATE
TITLE	

NATIONAL AERONAUTICS AND SPACE ADMINISTRATION
JOHN F. KENNEDY SPACE CENTER, NASA
KENNEDY SPACE CENTER, FLORIDA

ASSEMBLY DRAWINGS
MPPU REFURBISHMENT DESIGN
ENVIRONMENTAL CONTROL SYSTEM
BULKHEAD DETAILS

SIZE F | DWG. NO. 584F0301001 | REV –
PROJ. NO. 95255 | SHEET | OF

M-15D

KSC FORM 1-11 (REV. 3/76) (C/G 3/93)

P:\95255\DRAWINGS\MECH\M-15D.DWG 28-JAN-2011 11:12 JOBETL

EAR 99

FOR ANY PURPOSE OTHER THAN IN CONNECTION WITH A DEFINITELY RELATED GOVERNMENT PROCUREMENT OPERATION, THE UNITED STATES GOVERNMENT THEREBY INCURS NO RESPONSIBILITY NOR ANY OBLIGATION WHATSOEVER; AND THE FACT THAT THE GOVERNMENT MAY HAVE FORMULATED, FURNISHED, OR IN ANY WAY SUPPLIED THE SAID DRAWINGS, SPECIFICATIONS OR ANY OTHER DATA IS NOT TO BE REGARDED BY IMPLICATION OR OTHERWISE IN ANY MANNER LICENSING THE HOLDER OR ANY OTHER PERSONS OR CORPORATION, OR CONVEYING ANY RIGHTS OR PERMISSION TO MANUFACTURE, USE, OR SELL ANY PATENTED INVENTION THAT IN ANY WAY BE RELATED THERETO.

EAR 99 – NO LICENSE REQUIRED

The information contained in this document is technical in content, but not technical data as defined by the International Traffic in Arms (ITAR) or the Export Administration Regulations (EAR), and therefore is EAR 99 NLR, no export license required, suitable for public release. (General Prohibition Six (Embargo) applies to all items subject to the EAR, i.e. items on the CCL and within EAR 99 NLR. You may not make an export or reexport contrary to the provisions of part 746 (Embargos and Other Special Controls) of the EAR and 22 CFR part 126.1 of the ITAR).

EDDR # 113043 : NASA KSC Export Control Office (321- 867-9209)

EAR 99

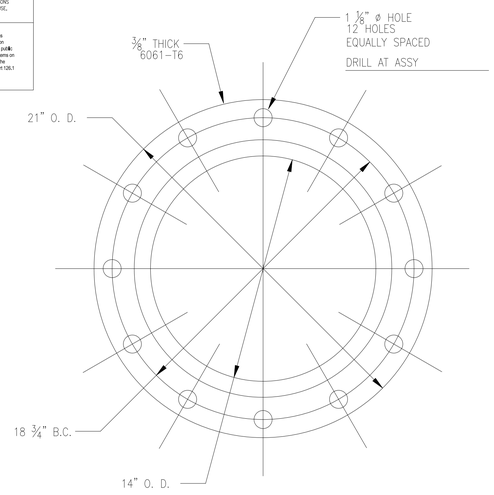

DETAIL — SCALE: 3"=1'-0" — CD / M-8 — CD / M-10 — A

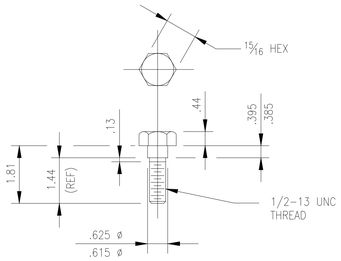

DETAIL — SCALE: 6"=1'-0" — BV / M-6

MATL: .4140 STEEL
HEAT TREAT TO GR 5
PLATING: BRIGHT ZINC

QTY: 18 PER UNIT

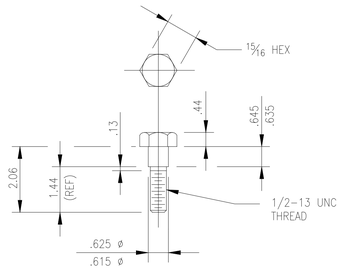

DETAIL — SCALE: 6"=1'-0" — BU / M-6

MATL: .4140 STEEL
HEAT TREAT TO GR 5
PLATING: BRIGHT ZINC

QTY: 18 PER UNIT

SPECIFIC NOTES:

A — SAME CONFIGURATION FOR GASKET. FABRICATE GASKET USING 40 DUROMETER SILICONE RUBBER, 1/4" THICK.

B — HEAD OF SHOULDER BOLT SHALL NOT CLAMP DOWN ONTO GUIDE.

C — PREPARE AND PAINT IN ACCORDANCE WITH GENERAL NOTES FROM SHEET V-1A.

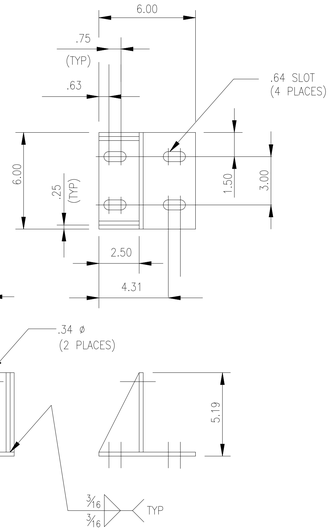

DETAIL — SCALE: 3"=1'-0" — BS / –

MATL: .25 STEEL PLATE
ALLOY 1018

QTY: 6 PER UNIT

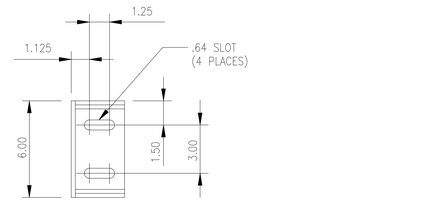

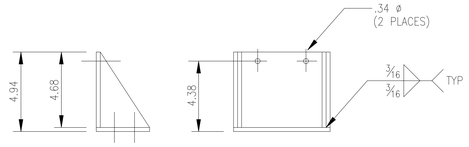

DETAIL — SCALE: 3"=1'-0" — BT / –

MATL: .25 STEEL PLATE
ALLOY 1018

QTY: 6 PER UNIT

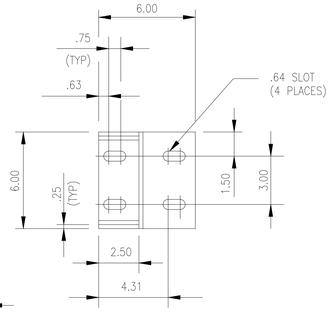

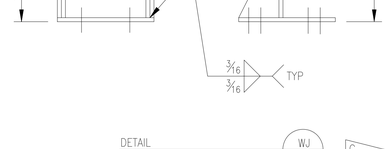

DETAIL — SCALE: 3"=1'-0" — WJ / M-6 — C

MATL: .25 STEEL PLATE
ALLOY 1018

QTY: 6 PER UNIT

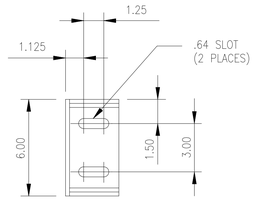

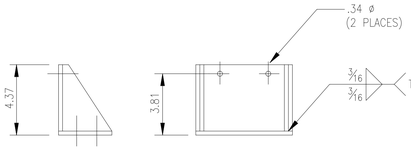

DETAIL — SCALE: 3"=1'-0" — WK / M-6 — C

MATL: .25 STEEL PLATE
ALLOY 1018

QTY: 6 PER UNIT

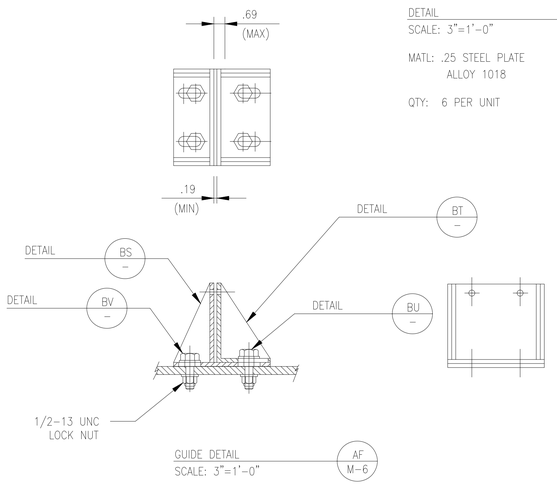

GUIDE DETAIL — SCALE: 3"=1'-0" — AF / M-6

THIS SHEET IS REFERENCE ONLY COPIED FROM 80K57281

3 0 3 6 9
SCALE: 3" = 1'

0 2 4 6
SCALE: 6" = 1'

SYM	ZONE	DESCRIPTION	DATE	APPROVAL
		REVISIONS		

SIGNATURES	DATE
DRAFTER	
CHECKER	
ENGINEER	
SUBMITTED	
APPROVED	DATE

NATIONAL AERONAUTICS AND SPACE ADMINISTRATION
JOHN F. KENNEDY SPACE CENTER, NASA
KENNEDY SPACE CENTER, FLORIDA

ASSEMBLY DRAWINGS

MPPU REFURBISHMENT DESIGN
ENVIRONMENTAL CONTROL SYSTEM
FLANGE & SUPPORT DETAILS

SIZE F | DWG. NO. 584F0301001 | REV —

PROJ. NO. 95255 | SHEET | OF

TITLE

M-16

P:\95255\DRAWINGS\MECH\M-16.DWG 31-JAN-2011 08:30 JOBETL

KSC FORM 1-11 (REV. 3/76) (C/G 3/93)

EAR 99

FOR ANY PURPOSE OTHER THAN IN CONNECTION WITH A DEFINITELY RELATED GOVERNMENT PROCUREMENT OPERATION, THE UNITED STATES GOVERNMENT THEREBY INCURS NO RESPONSIBILITY NOR ANY OBLIGATION WHATSOEVER, AND THE FACT THAT THE GOVERNMENT MAY HAVE FORMULATED, FURNISHED, OR IN ANY WAY SUPPLIED THE SAID DRAWINGS, SPECIFICATIONS OR ANY OTHER DATA IS NOT TO BE REGARDED BY IMPLICATION OR OTHERWISE IN ANY MANNER LICENSING THE HOLDER OR ANY OTHER PERSONS OR CORPORATION, OR CONVEYING ANY RIGHTS OR PERMISSION TO MANUFACTURE, USE, OR SELL ANY PATENTED INVENTION THAT IN ANY WAY BE RELATED THERETO.

EAR 99 - NO LICENSE REQUIRED

The information contained in this document is technical in content, but not technical data as defined by the International Traffic in Arms Regulations (ITAR) or the Export Administration Regulations (EAR), and therefore is EAR 99 NLR, no export license required, suitable for public release. (General Prohibition Six (Embargo) applies to all items subject to the EAR, i.e. items on the CCL and within EAR 99 NLR. You may not make an export or reexport contrary to the provisions of part 746 (Embargos and Other Special Controls) of the EAR and 22 CFR part 126.1 of the ITAR).

ECCN # 113043 : NASA KSC Export Control Office (321- 867-6009)

EAR 99

SPECIFIC NOTES:

A. PREPARE AND PAINT IN ACCORDANCE WITH GENERAL NOTES FROM SHEET V-1A.

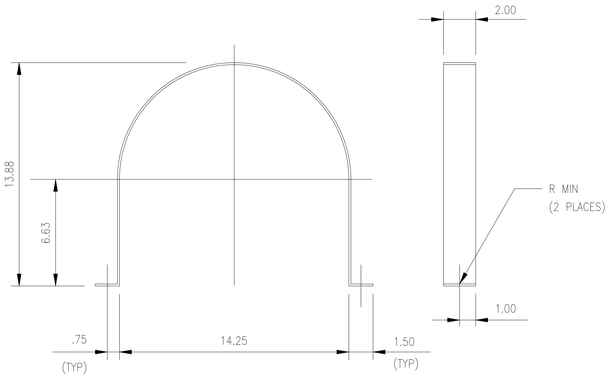

DETAIL AF M-2A
SCALE: NTS
MAT'L: 16 GA 304 STEEL
QTY: 3 PER UNIT

ANGLE, HEATER SUPPORT, HORIZ.

DETAIL SK M-2
SCALE: NTS

(BOLT IN, FURNISH LOOSE)
(ADD AT ASSEMBLY)
MAT'L: L 2-1/2x2-1/2x1/4
STRUCTURAL STEEL
QTY: 4 PER UNIT
(TYPICAL)

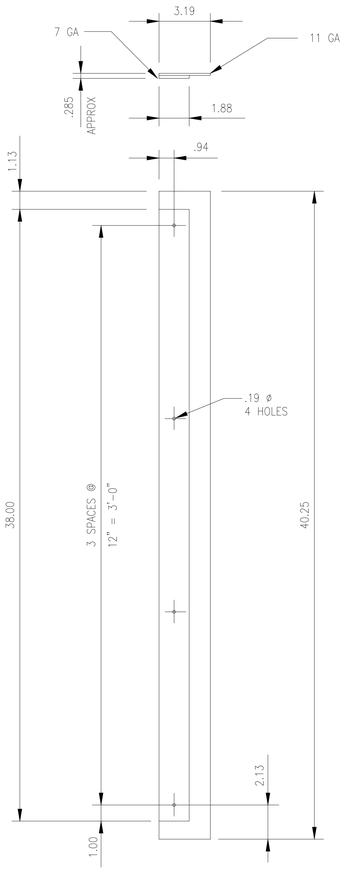

EXTENSION, LOUVER
AT FILTER HOUSING

DETAIL AM M-4
SCALE: NTS
MAT'L: STEEL AS NOTED
QTY: ONE PER UNIT
NOTE: RIVET AT ASSEMBLY

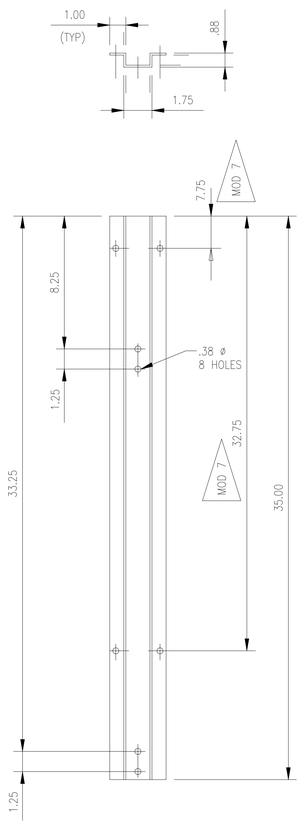

CHANNEL, HEATER MTG VERTICAL

DETAIL W M-2
SCALE: NTS
MAT'L: .125 ALUM, 5052-H32
QTY: 2 PER UNIT

MOD 7 A.

NOTE: REPLACE OR MODIFY HEATER MOUNTING BRACKET. FIELD VERIFY MOUNTING HOLE LOCATIONS.

6 0 12 24
SCALE:1 1/2"=1'

SYM	ZONE	DESCRIPTION	DATE	APPROVAL

REVISIONS

SIGNATURES		DATE
DRAFTER	T. JOBE	05/06/11
CHECKER	D. MAY	05/06/11
ENGINEER	A. JACQUES	05/06/11
	R. WITHERSPOON	05/06/11
	R. FRANCO	05/06/11
SUBMITTED	T.O. ADAMS	05/06/11
APPROVED	E.A. THAXTON	05/06/11
TITLE		

NATIONAL AERONAUTICS AND SPACE ADMINISTRATION
JOHN F. KENNEDY SPACE CENTER, NASA
KENNEDY SPACE CENTER, FLORIDA

ASSEMBLY DRAWINGS
MPPU REFURBISHMENT DESIGN
ENVIRONMENTAL CONTROL SYSTEM
MISC SHEET METAL DETAILS

SIZE F | DWG. NO. 584F0301001 | REV –
PROJ. NO. 95255 | SHEET OF

M-16A

P:\95255\DRAWINGS\MECH\M-16A.DWG 24-JAN-2011 08:39 JOBETL

KSC FORM 1-11 (REV. 3/76) (C/G 3/93)

EAR 99

FOR ANY PURPOSE OTHER THAN IN CONNECTION WITH A DEFINITELY RELATED GOVERNMENT PROCUREMENT OPERATION, THE UNITED STATES GOVERNMENT THEREBY INCURS NO RESPONSIBILITY NOR ANY OBLIGATION WHATSOEVER; AND THE FACT THAT THE GOVERNMENT MAY HAVE FORMULATED, FURNISHED, OR IN ANY WAY SUPPLIED THE SAID DRAWINGS, SPECIFICATIONS OR ANY OTHER DATA IS NOT TO BE REGARDED BY IMPLICATION OR OTHERWISE IN ANY MANNER LICENSING THE HOLDER OR ANY OTHER PERSONS OR CORPORATION, OR CONVEYING ANY RIGHTS OR PERMISSION TO MANUFACTURE, USE, OR SELL ANY PATENTED INVENTION THAT IN ANY WAY BE RELATED THERETO.

EAR 99 – NO LICENSE REQUIRED

The Information contained in this document is technical in content, but not technical data as defined by the International Traffic in Arms (ITAR) or the Export Administration Regulations (EAR), and therefore is EAR 99 NLR, no license required, suitable for public release. (General Prohibition Six (Embargo) applies to all items subject to the EAR, i.e. items on the CCL and within EAR 99 NLR. You may not make an export or reexport contrary to the prohibitions of part 746 (Embargos and Other Special Controls) of the EAR and 22 CFR part 126.1 of the ITAR).

EDDR # 113043 : NASA KSC Export Control Office (321- 867-9209)

SPECIFIC NOTES:

A. THE REQUIREMENTS FOR THIS SPACER AND OVERALL THICKNESS TO BE VERIFIED ON SITE AFTER INSTALLATION OF ALL COILS, SCREENS & PLENUMS.

B. FIELD VERIFY MOUNTING HOLE LOCATIONS WITH EXISTING FLANGE PATTERN.

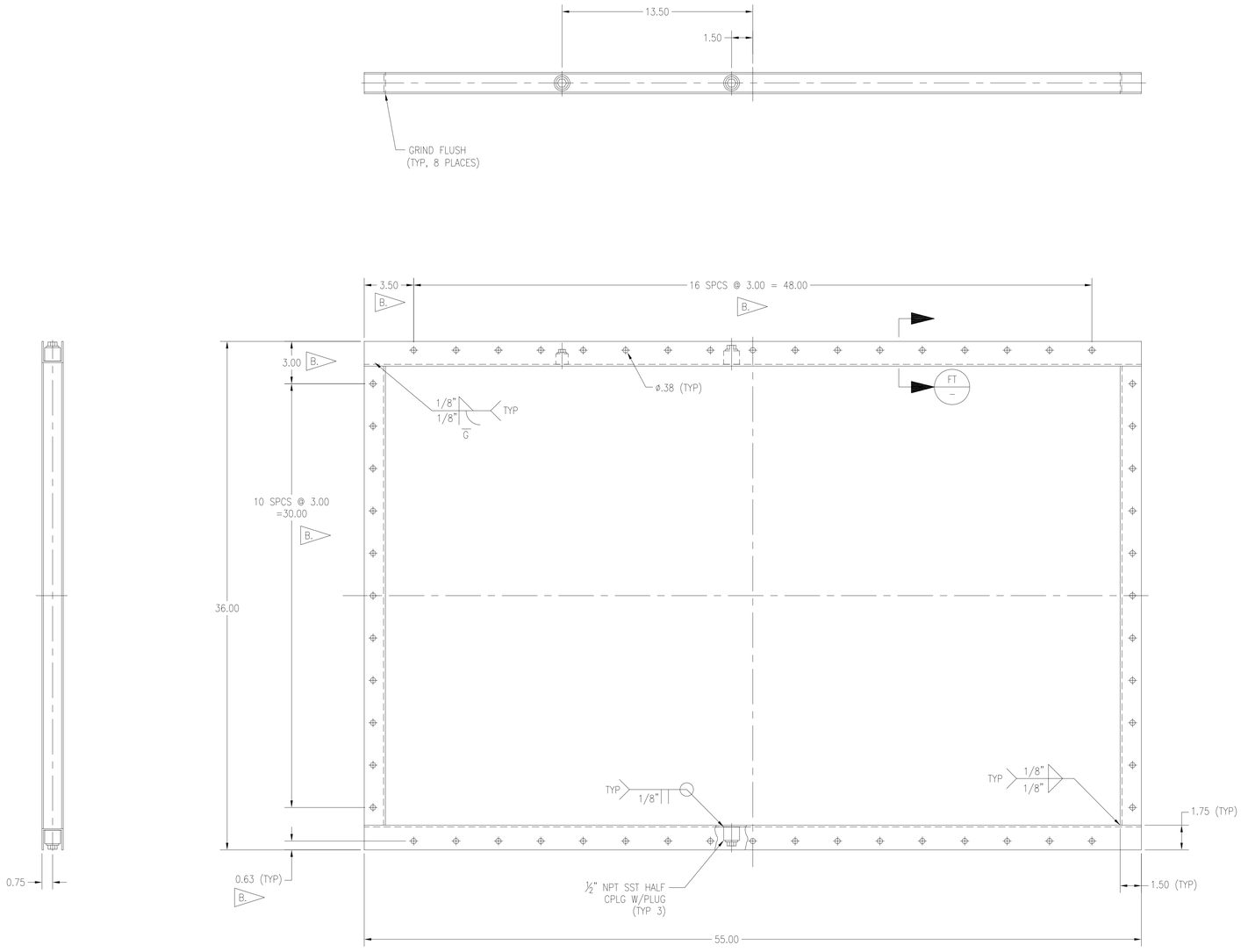

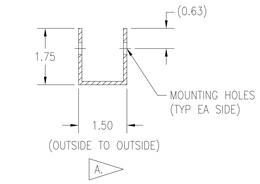

SECTION FT
SCALE: 6"=1'-0"

SPACER DETAIL CM M-6 CM M-9
SCALE: 1 1/2"=1'-0"

SPACER, COLD DECK
MAT'L: 12 GA SST
QTY: ONE PER UNIT

MOD 15A

6 0 12 24
SCALE:1 1/2"=1'

SYM	ZONE	DESCRIPTION	DATE	APPROVAL
		REVISIONS		

SIGNATURES		DATE
DRAFTER	T. JOBE	05/06/11
CHECKER	D. MAY	05/06/11
ENGINEER	A. JACQUES	05/06/11
	R. WITHERSPOON	05/06/11
	R. FRANCO	05/06/11
SUBMITTED	T.O. ADAMS	05/06/11
APPROVED	E.A. THAXTON	05/06/11

NATIONAL AERONAUTICS AND SPACE ADMINISTRATION
JOHN F. KENNEDY SPACE CENTER, NASA
KENNEDY SPACE CENTER, FLORIDA

ASSEMBLY DRAWINGS

MPPU REFURBISHMENT DESIGN
ENVIRONMENTAL CONTROL SYSTEM
PLENUM SPACER

M-16B

SIZE F | DWG. NO. 584F0301001 | REV —

TITLE | PROJ. NO. 95255 | SHEET | OF

P:\95255\DRAWINGS\MECH\M-16B.DWG 28-APR-2011 09:08 JOBETL

KSC FORM 1-11 (REV. 3/76) (C/G 3/93)

FOR ANY PURPOSE OTHER THAN IN CONNECTION WITH A DEFINITELY RELATED GOVERNMENT PROCUREMENT OPERATION, THE UNITED STATES GOVERNMENT THEREBY INCURS NO RESPONSIBILITY NOR ANY OBLIGATION WHATSOEVER; AND THE FACT THAT THE GOVERNMENT MAY HAVE FORMULATED, FURNISHED, OR IN ANY WAY SUPPLIED THE SAID DRAWINGS, SPECIFICATIONS OR ANY OTHER DATA IS NOT TO BE REGARDED BY IMPLICATION OR OTHERWISE IN ANY MANNER LICENSING THE HOLDER OR ANY OTHER PERSONS OR CORPORATION, OR CONVEYING ANY RIGHTS OR PERMISSION TO MANUFACTURE, USE, OR SELL ANY PATENTED INVENTION THAT IN ANY WAY BE RELATED THERETO.

EAR 99 – NO LICENSE REQUIRED

The information contained in this document is technical in content, but not technical data as defined by the International Traffic in Arms (ITAR) or the Export Administration Regulations (EAR), and therefore is EAR 99 NLR. No export license required, suitable for public release. (General Prohibition Six (Embargo) applies to all items subject to the EAR, i.e. items on the CCL and within EAR 99 NLR. You may not make an export or reexport contrary to the provisions of part 746 (Embargos and Other Special Controls) of the EAR and 22 CFR part 126.1 of the ITAR).

EDDR # 113043 : NASA KSC Export Control Office (321- 867-9209)

EAR 99

SPECIFIC NOTES:

A. PIPING SHALL BE TYPE K COPPER TUBING IN ACCORDANCE WITH ASTM B88. INDICATED SIZES REFER TO NOMINAL DIAMETER.

B. SUPPORT PIPING FROM BASE STRUCTURE AS REQUIRED.

C. VALVES & PUMPS TO BE SUPPLIED WITH OPTIONAL MOUNTING KIT. SUPPORT VALVES & PUMPS FROM STEEL FRAME TO PREVENT PIPE MOVEMENT & VIBRATION.

D. ALL HOT WATER PIPING SHALL BE INSULATED WITH 1" THICK ARMAFLEX INSULATION. THE INSULATION ON THE HORIZONTAL PIPING ADJACENT TO THE HOT WATER CONTROL VALVES SHALL BE COVERED WITH A PVC JACKET, P/N: 550 PVC, CHILDERS PRODUCTS CO.

E. SUPPORT EQUIPMENT FROM ADJACENT STRUCTURE AS REQUIRED.

F. REFERENCE SCHEMATICS ON SHEET V–2A FOR MORE COMPLETE INFORMATION.

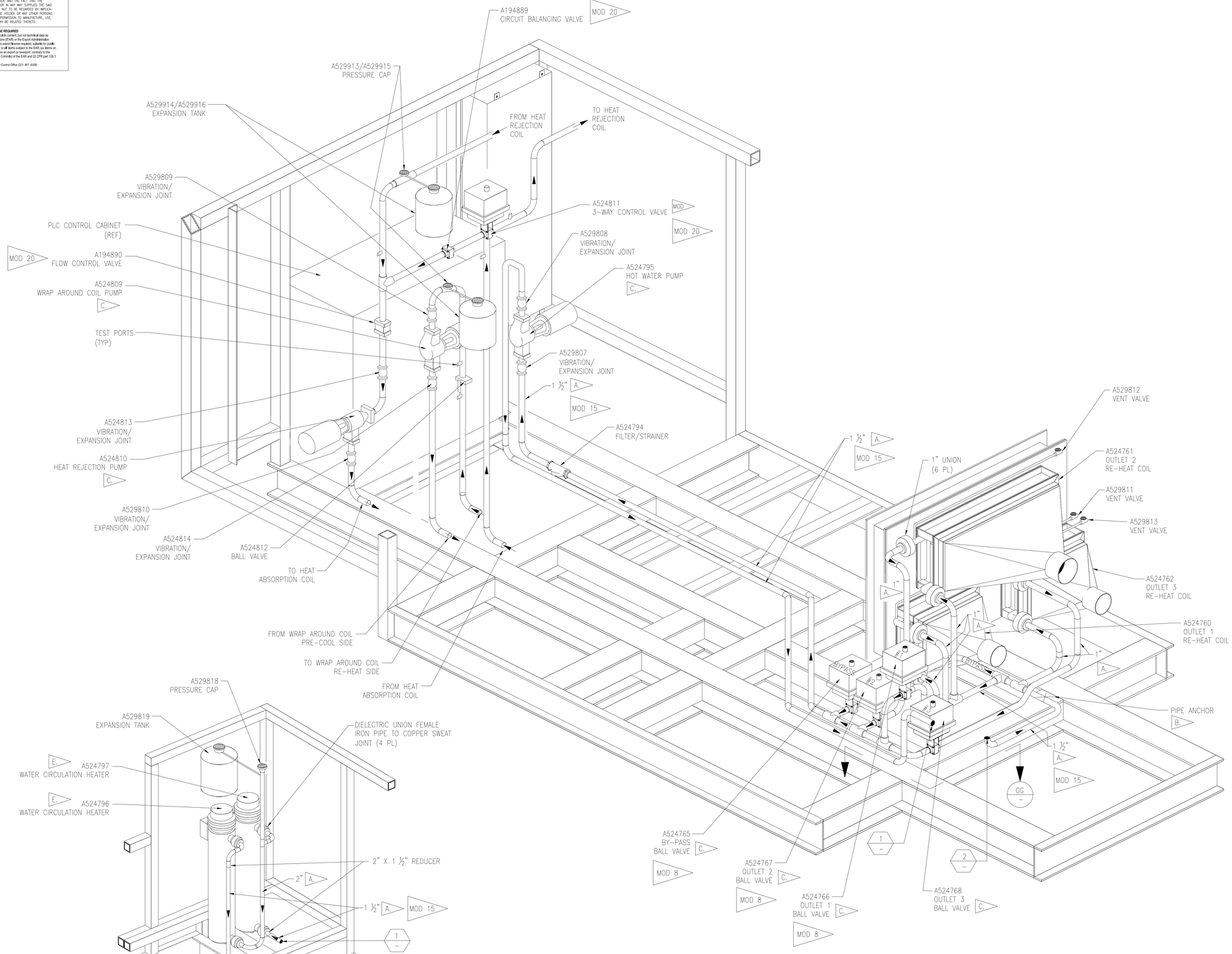

HOT WATER PIPING ISOMETRIC

NTS

SYM	ZONE	DESCRIPTION	DATE	APPROVAL
		REVISIONS		

SIGNATURES		DATE
DRAFTER	T. JOBE	05/06/11
CHECKER	D. MAY	05/06/11
ENGINEER	A. JACQUES	05/06/11
	R. WITHERSPOON	05/06/11
	R. FRANCO	05/06/11
SUBMITTED	T.O. ADAMS	05/06/11
APPROVED	E.A. THAXTON	05/06/11

NATIONAL AERONAUTICS AND SPACE ADMINISTRATION
JOHN F. KENNEDY SPACE CENTER, NASA
KENNEDY SPACE CENTER, FLORIDA

ASSEMBLY DRAWINGS

MPPU REFURBISHMENT DESIGN
ENVIRONMENTAL CONTROL SYSTEM
HOT WATER PIPING
ISOMETRIC

SIZE F | DWG. NO. 584F0301001 | REV –

PROJ. NO. 95255 | SHEET | OF

TITLE

M–17

P:\95255\DRAWINGS\MECH\M-17.DWG 25-APR-2011 08:24 JOBETL

EAR 99

KSC FORM 1–11 (REV. 3/76) (C/G 3/93)

FOR ANY PURPOSE OTHER THAN IN CONNECTION WITH A DEFINITELY RELATED GOVERNMENT PROCUREMENT OPERATION, THE UNITED STATES GOVERNMENT THEREBY INCURS NO RESPONSIBILITY NOR ANY OBLIGATION WHATSOEVER; AND THE FACT THAT THE GOVERNMENT MAY HAVE FORMULATED, FURNISHED, OR IN ANY WAY SUPPLIED THE SAID DRAWINGS, SPECIFICATIONS OR ANY OTHER DATA IS NOT TO BE REGARDED BY IMPLICATION OR OTHERWISE IN ANY MANNER LICENSING THE HOLDER OR ANY OTHER PERSONS OR CORPORATION, OR CONVEYING ANY RIGHTS OR PERMISSION TO MANUFACTURE, USE, OR SELL ANY PATENTED INVENTION THAT IN ANY WAY BE RELATED THERETO.

EAR 99 – NO LICENSE REQUIRED

The information contained in this document is technical in content, but not technical data as defined by the International Traffic in Arms (ITAR) or the Export Administration Regulations (EAR), and therefore is EAR 99 NLR, no export license required, suitable for public release. (General Prohibition Six (Embargo) applies to all items subject to the EAR, i.e. items on the CCL and within EAR 99 NLR. You may not make an export or reexport contrary to the provisions of part 746 (Embargos and Other Special Controls) of the EAR and 22 CFR part 126.1 of the ITAR).

EDDR # 113043 : NASA KSC Export Control Office (321- 867- 6039)

EAR 99

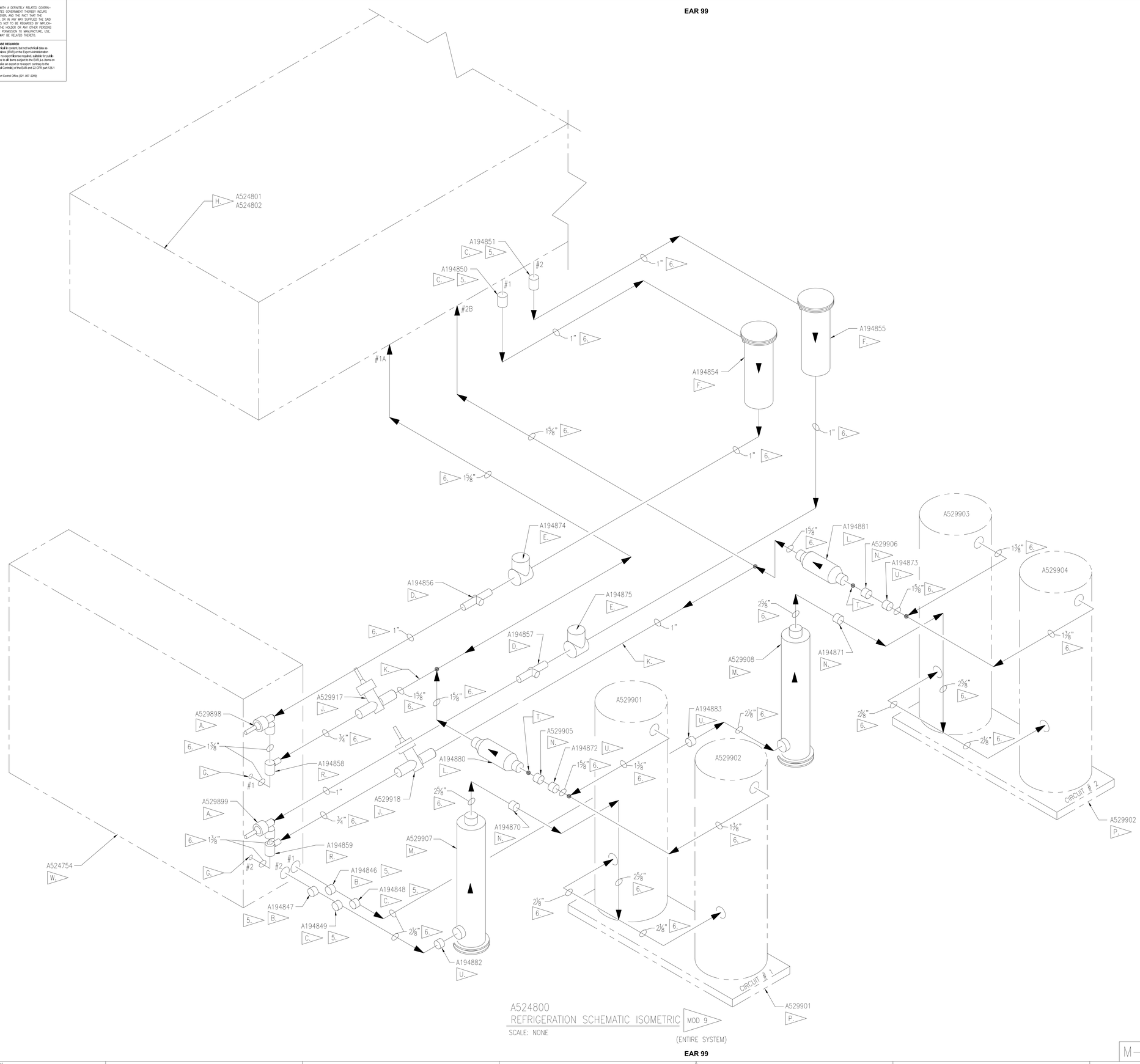

A524800
REFRIGERATION SCHEMATIC ISOMETRIC MOD 9
SCALE: NONE
(ENTIRE SYSTEM)

SPECIFIC NOTES:

- A. ELECTRICAL EXPANSION VALVE (EEV)
- B. TEMPERATURE SENSOR
- C. PRESSURE SENSOR
- D. SIGHT GLASS
- E. ISOLATION VALVE WITH ACCESS PORT
- F. LIQUID LINE DRYER/FILTER
- G. DISTRIBUTOR (PART OF COIL)
- H. CONDENSERS (2 PER UNIT)
- J. HOT GAS BYPASS VALVE
- K. PRESSURE LINE TO HOT GAS BYPASS VALVE
- L. CHECK VALVE
- M. SUCTION LINE STRAINER
- N. ISOLATION VALVE WITH ACCESS PORT
- P. COMPRESSOR UNIT
- R. AUXILIARY SIDE CONNECTOR
- T. PRESSURE (FOR GAUGES) PORT
- U. RELIEF VALVE
- W. EVAPORATOR COOLING COIL

GENERAL NOTES:

1. ALL MANUAL VALVES SHALL BE ORIENTED FOR EASE OF OPERATION & ACCESS.
2. ALL FILTERS/STRAINERS SHALL BE LOCATED FOR CLEAR ACCESS TO FILTER ELEMENTS.
3. ALL VISUAL INDICATORS SHALL BE CLEARLY VISIBLE FROM COMPRESSOR ACCESS PANEL LOCATION.
4. COMPRESSOR SUCTION LINES SHALL BE INSULATED WITH 2" THICK INSULATION (ARMAFLEX INSULATION INSTALLED USING 520 ADHESIVE & WB ARMAFLEX FINISH).

5. SENSORS TO BE LOCATED WITHIN 6" OF COIL OUTLET.

6. FOR TUBING & FITTING SPECIFICATIONS SEE DWG V-2B

7. JOINTS SHALL BE BRAZED IN ACCORDANCE WITH KSC-SPEC-Z-0005A.
8. COMPRESSORS SHALL BE MOUNTED TO MAINTAIN CLEAR ACCESS TO FASTENERS, FITTINGS & MAINTAIN CLEAR ACCESS FOR COMPRESSOR REMOVAL.
9. ALL COMPRESSOR TO TUBE CONNECTIONS SHALL BE SUPPLIED WITH STEEL ROTO LOCK TO BRAZED TUBE ADAPTERS.
10. COMPRESSORS SHALL BE RUBBER MOUNTED IN ACCORDANCE WITH MANUFACTURE RECOMMENDATIONS.
11. RELIEF PIPING SHALL BE ADEQUATELY SUPPORTED AND THE DISCHARGE LINE SHALL BE ROUTED TO VENT BELOW THE BOTTOM OF THE MPPU, WITH A T TYPE DISCHARGE TO PREVENT REACTION LOADS ON RELIEF VALVE AND PIPING.

SYM	ZONE	DESCRIPTION	DATE	APPROVAL

REVISIONS

SIGNATURES		DATE
DRAFTER	T. JOBE	05/06/11
CHECKER	D. MAY	05/06/11
ENGINEER	A. JACQUES	05/06/11
	R. WITHERSPOON	05/06/11
	R. FRANCO	05/06/11
SUBMITTED	T.O. ADAMS	05/06/11
APPROVED	E.A. THAXTON	05/06/11

NATIONAL AERONAUTICS AND SPACE ADMINISTRATION
JOHN F. KENNEDY SPACE CENTER, NASA
KENNEDY SPACE CENTER, FLORIDA

ASSEMBLY DRAWINGS

MPPU REFURBISHMENT DESIGN
ENVIRONMENTAL CONTROL SYSTEM
REFRIGERATION SCHEMATIC
ISOMETRIC

TITLE

SIZE F | DWG. NO. 584F0301001 | REV –

PROJ. NO. 95255 | SHEET OF

M-17A

P:\95255\DRAWINGS\MECH\M-17A.DWG 14-APR-2011 16:23 JOBEL

KSC FORM 1-11 (REV. 3/76) (C/G 3/93)

EAR 99

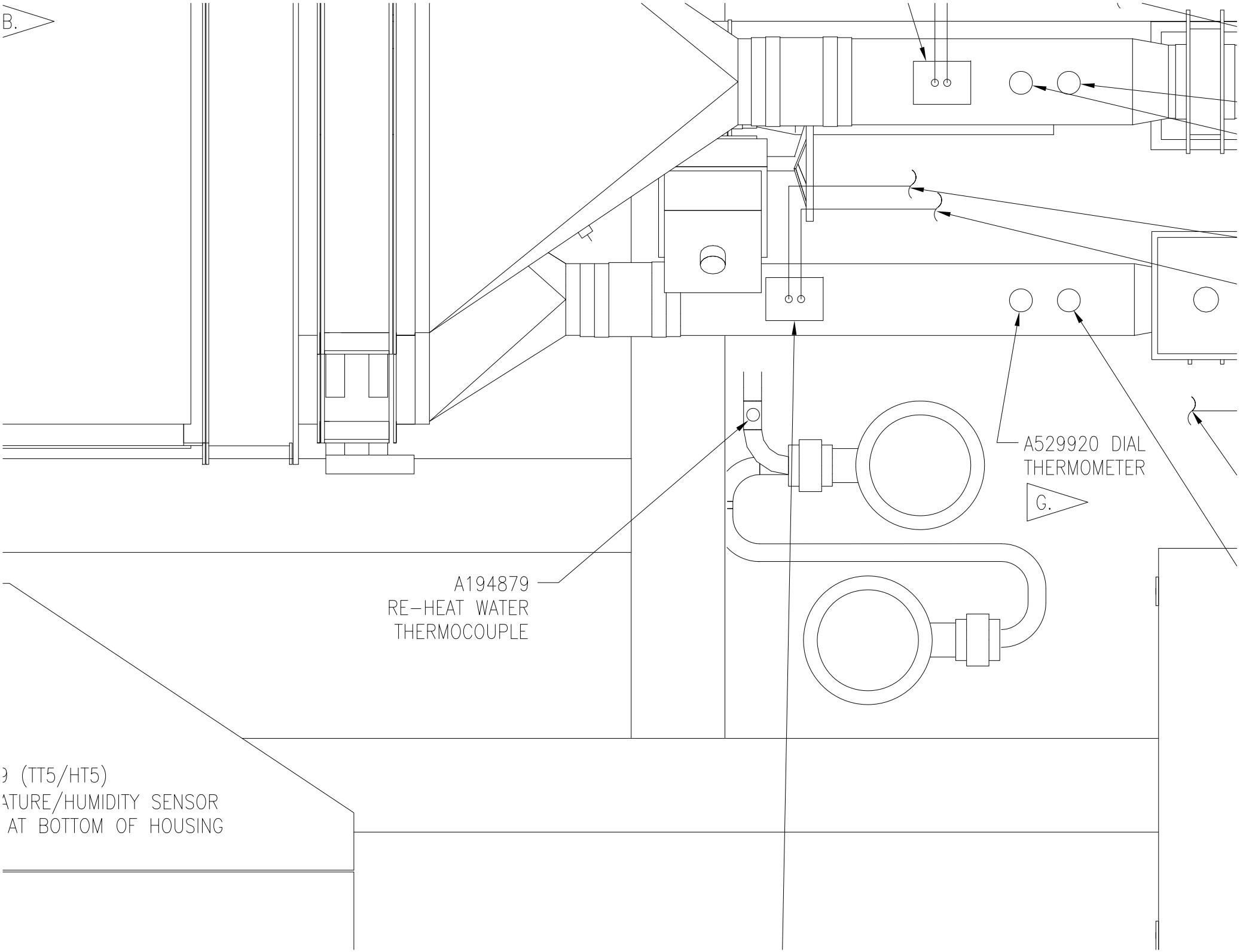
B.
A529920 DIAL
THERMOMETER
G.
A194879
RE-HEAT WATER
THERMOCOUPLE
(TT5/HT5)
ATURE/HUMIDITY SENSOR
AT BOTTOM OF HOUSING

FOR ANY PURPOSE OTHER THAN IN CONNECTION WITH A DEFINITELY RELATED GOVERNMENT PROCUREMENT OPERATION, THE UNITED STATES GOVERNMENT THEREBY INCURS NO RESPONSIBILITY NOR ANY OBLIGATION WHATSOEVER; AND THE FACT THAT THE GOVERNMENT MAY HAVE FORMULATED, FURNISHED, OR IN ANY WAY SUPPLIED THE SAID DRAWINGS, SPECIFICATIONS OR ANY OTHER DATA IS NOT TO BE REGARDED BY IMPLICATION OR OTHERWISE IN ANY MANNER LICENSING THE HOLDER OR ANY OTHER PERSONS OR CORPORATION, OR CONVEYING ANY RIGHTS OR PERMISSION TO MANUFACTURE, USE, OR SELL ANY PATENTED INVENTION THAT IN ANY WAY BE RELATED THERETO.

EAR 99 – NO LICENSE REQUIRED

The information contained in this document is technical in content, but not technical data as defined by the International Traffic in Arms (ITAR) or the Export Administration Regulations (EAR), and therefore is EAR 99 NLR, meaning no license required, suitable for public release. (General Prohibition Six (Embargo) applies to all items subject to the EAR, i.e. items on the CCL and within EAR 99 NLR. You may not make an export or reexport contrary to the provisions of part 746 (Embargos and Other Special Controls) of the EAR and 22 CFR part 126.1 of the ITAR).

EDDR # 113043 : NASA KSC Export Control Office (321- 867- 6039)

EAR 99

SPECIFIC NOTES:

A. ALL COMPONENTS WITH AN ASSIGNED MECHANICAL "A" NUMBER IN THE SYSTEM SCHEMATIC SHALL HAVE THE "A" NUMBER AND DRAWING NUMBER STAMPED OR ENGRAVED ONTO ITEM TAG. LETTERS SHALL BE 1/8" HIGH AND MARKING SHALL BE PER THE PROVISIONS MIL-STD-792 & THE GENERAL REQUIREMENTS (PARAGRAPH 3.1) & QUALITY PROVISIONS (PARAGRAPH 4) OF KSC-STD-E-0015. TAGS SHALL BE ATTACHED TO THEIR RESPECTIVE COMPONENTS WITH SAFETY WIRE AND SWAGING SLEEVES.

B. PHOTO ETCH TO 0.063 THICK ALUMINUM PLATE AND LOCATE ON FACE OF DOOR USING DOUBLE STICK TAPE. USE METAL PHOTO PROCESS. NOMENCLATURE SIZE AND LOCATION APPROXIMATELY AS SHOWN. CHARACTERS SHALL BE PER THE GENERAL REQUIREMENTS (PARAGRAPH 3.1) & QUALITY ASSURANCE PROVISIONS (PARAGRAPH 4) OF KSC-STD-0015. MARKING SHALL BE MADE PRIOR TO ANODIZING.

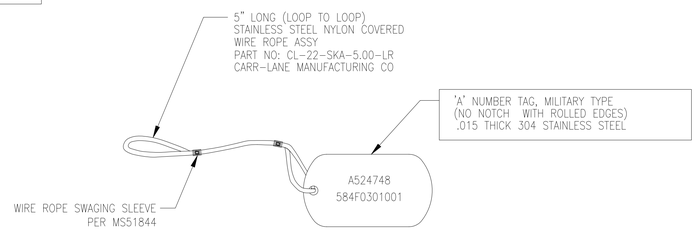

TYPICAL "A" NUMBER TAG A.
SCALE: NONE

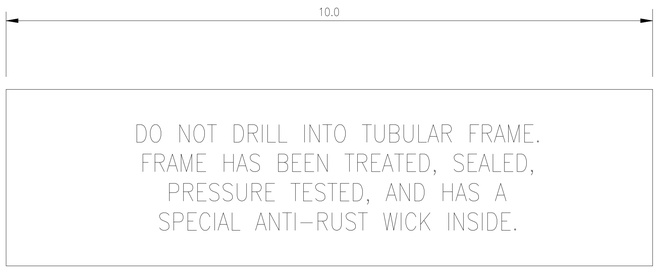

DETAIL BC M-5 B.
SCALE: FULL
QTY: 4 PER UNIT

DETAIL BF M-5 B.
SCALE: FULL
QTY: ONE PER UNIT

DETAIL BD M-5 B.
SCALE: FULL
QTY: ONE PER UNIT

DETAIL BE M-5 B.
SCALE: FULL
QTY: ONE PER UNIT

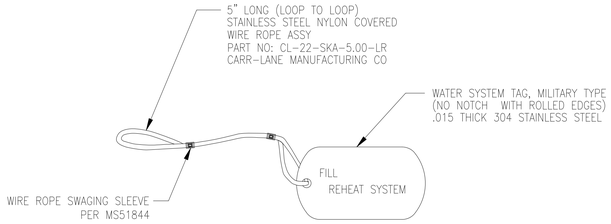

TYPICAL WATER SYSTEM TAG A.
SCALE: NONE

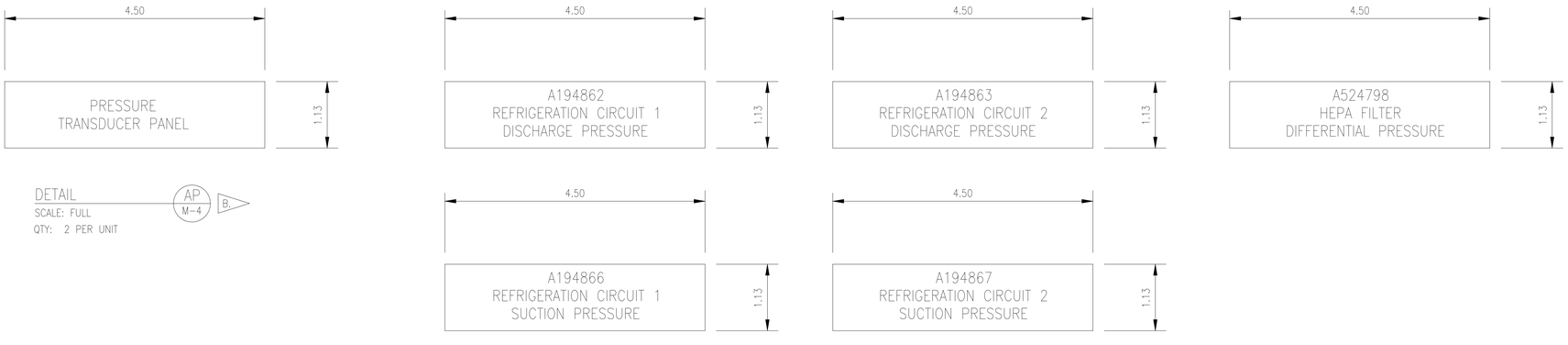

DETAIL AP M-4 B.
SCALE: FULL
QTY: 2 PER UNIT

REFRIGERATION GAUGE PANEL LABELS B.
SCALE: FULL
QTY: ONE PER UNIT
MOD 15B

FILL
REHEAT SYSTEM
FILL
WRAP AROUND SYSTEM
FILL
HEAT REJECT SYSTEM
FILL
OUTLET 1 COIL
FILL
OUTLET 3 COIL
FILL
OUTLET 2 COIL
VENT
HEAT REJECT COIL

VENT
WRAP AROUND
REHEAT COIL
VENT
WRAP AROUND
PRECOOL COIL
DRAIN
REHEAT SYSTEM
DRAIN
WRAP AROUND
SYSTEM
DRAIN
HEAT REJECT SYSTEM
VENT
ABSORPTION COIL

SYM	ZONE	DESCRIPTION	DATE	APPROVAL
REVISIONS				

SIGNATURES		DATE
DRAFTER	T. JOBE	05/06/11
CHECKER	D. MAY	05/06/11
ENGINEER	A. JACQUES	05/06/11
	R. WITHERSPOON	05/06/11
	R. FRANCO	05/06/11
SUBMITTED	T.O. ADAMS	05/06/11
APPROVED	E.A. THAXTON	05/06/11

NATIONAL AERONAUTICS AND SPACE ADMINISTRATION
JOHN F. KENNEDY SPACE CENTER, NASA
KENNEDY SPACE CENTER, FLORIDA

ASSEMBLY DRAWINGS
MPPU REFURBISHMENT DESIGN ENVIRONMENTAL CONTROL SYSTEM IDENTIFICATION TAG DETAILS

SIZE F | DWG. NO. 584F0301001 | REV —
PROJ. NO. 95255 | SHEET | OF
TITLE
P:\95255\DRAWINGS\MECH\M-19.DWG 15-MAR-2011 13:47 JOBETL

M-19

KSC FORM 1-11 (REV. 3/76) (C/G 3/93)

EAR 99

FOR ANY PURPOSE OTHER THAN IN CONNECTION WITH A DEFINITELY RELATED GOVERNMENT PROCUREMENT OPERATION, THE UNITED STATES GOVERNMENT THEREBY INCURS NO RESPONSIBILITY NOR ANY OBLIGATION WHATSOEVER; AND THE FACT THAT THE GOVERNMENT MAY HAVE FORMULATED, FURNISHED, OR IN ANY WAY SUPPLIED THE SAID DRAWINGS, SPECIFICATIONS OR ANY OTHER DATA IS NOT TO BE REGARDED BY IMPLICATION OR OTHERWISE IN ANY MANNER LICENSING THE HOLDER OR ANY OTHER PERSONS OR CORPORATION, OR CONVEYING ANY RIGHTS OR PERMISSION TO MANUFACTURE, USE, OR SELL ANY PATENTED INVENTION THAT IN ANY WAY BE RELATED THERETO.

EAR 99 – NO LICENSE REQUIRED

The Information contained in this document is technical in content, but not technical data as defined by the International Traffic in Arms (ITAR) or the Export Administration Regulations (EAR), and therefore is EAR 99 NLR, no export license required, suitable for public release. (General Prohibition Six (Embargo) applies to all items subject to the EAR, i.e. items on the CCL and within EAR 99 NLR. You may not make an export or reexport contrary to the provisions of part 746 (Embargos and Other Special Controls) of the EAR and 22 CFR part 126.1 of the ITAR).

EDDR # 113043 : NASA KSC Export Control Office (321- 867- 6039)

EAR 99

SPECIFIC NOTES:

A. STENCIL USING 1 INCH HIGH CHARACTERS ON VINYL CLAD CARD STOCK AS NOTED PER THE GENERAL REQUIREMENTS (PARAGRAPH 3.1) & QUALITY ASSURANCE PROVISIONS (PARAGRAPH 4) OF KSC-STD-E-0015, APPROXIMATELY WHERE SHOWN. STENCIL PAINT SHALL BE A COMMERCIALLY AVAILABLE SPRAY LACQUER(KRYLON INDUSTRIAL SPARVAR LACQUER PAINTS OR EQUAL). TEXT COLOR SHALL BE CLOSEST TO BLACK NO.17038 PER FED STD-595.

B. PER TIRE MANUFACTURE RECOMMENDATION

OUTLET 1

OUTLET 2

OUTLET 3

REFRIGERANT TYPE R-410A

NO STEP

EQUIPMENT SPEC
584FCM01001

SMS/EMCD
584F0301001

ASSEMBLY DRAWING
584F0301001

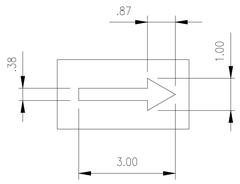

DETAIL
NTS

FILL AND VENT
HEAT REJECT SYSTEM
WRAP AROUND SYSTEM
ACCESS

FILL AND VENT
REHEAT SYSTEM
ACCESS

B. TIRE PRESSURE
XXX PSIG +/- X

1/2" CHARACTERS

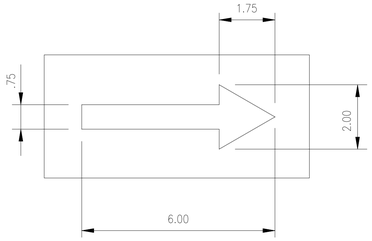

DETAIL
NTS

CAUTION
NOISE LEVEL EXCEEDS 90 DB
HEARING PROTECTION REQUIRED

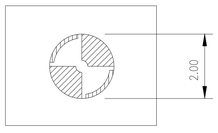

LABELS
SCALE: NTS

MOD 15B

SYM	ZONE	DESCRIPTION	DATE	APPROVAL
		REVISIONS		

	SIGNATURES	DATE
DRAFTER	T. JOBE	05/06/11
CHECKER	D. MAY	05/06/11
ENGINEER	A. JACQUES	05/06/11
	R. WITHERSPOON	05/06/11
	R. FRANCO	05/06/11
SUBMITTED	T.O. ADAMS	05/06/11
APPROVED	E.A. THAXTON	05/06/11

NATIONAL AERONAUTICS AND SPACE ADMINISTRATION
JOHN F. KENNEDY SPACE CENTER, NASA
KENNEDY SPACE CENTER, FLORIDA

ASSEMBLY DRAWINGS
MPPU REFURBISHMENT DESIGN
ENVIRONMENTAL CONTROL SYSTEM
STENCILS

TITLE M-19A

SIZE F | DWG. NO. 584F0301001 | REV –

PROJ. NO. 95255 | SHEET OF

P:\95255\DRAWINGS\MECH\M-19A.DWG 28-APR-2011 08:34 JOBEIL

KSC FORM 1-11 (REV. 3/76) (C/G 3/93)

EAR 99

FOR ANY PURPOSE OTHER THAN IN CONNECTION WITH A DEFINITELY RELATED GOVERNMENT PROCUREMENT OPERATION, THE UNITED STATES GOVERNMENT THEREBY INCURS NO RESPONSIBILITY NOR ANY OBLIGATION WHATSOEVER; AND THE FACT THAT THE GOVERNMENT MAY HAVE FORMULATED, FURNISHED, OR IN ANY WAY SUPPLIED THE SAID DRAWINGS, SPECIFICATIONS OR ANY OTHER DATA IS NOT TO BE REGARDED BY IMPLICATION OR OTHERWISE IN ANY MANNER LICENSING THE HOLDER OR ANY OTHER PERSONS OR CORPORATION, OR CONVEYING ANY RIGHTS OR PERMISSION TO MANUFACTURE, USE, OR SELL ANY PATENTED INVENTION THAT IN ANY WAY BE RELATED THERETO.

EAR 99 – NO LICENSE REQUIRED

The information contained in this document is technical in content, but not technical data as defined by the International Traffic in Arms (ITAR) or the Export Administration Regulations (EAR), and therefore is EAR 99 NLR. Items so designated, suitable for public release. (General Prohibition Six (Embargo) applies to all items subject to the EAR, i.e. items on the CCL and within EAR 99 NLR. You may not make an export or reexport contrary to the provisions of part 746 (Embargos and Other Special Controls) of the EAR and 22 CFR part 126.1 of the ITAR).

EDDR # 113043 : NASA KSC Export Control Office (321- 867-9209)

EAR 99

COMPRESSOR UNIT SCHEDULE

TAG No	TYPE	REFRIG MASS FLOW (total)	ISENTROPIC EFFICIENCY	COMPRESSOR				MOTOR		REMARKS:
				SUCTION TEMP	SUCTION PRESS	REFRIG	No OF COMPRESSORS	HP	ELECT	
A524800	SCROLL	3,475 lb/hr (EACH)	73%	50°F	122 PSIA	R-410A	4	4 @ 31 HP	480/3/60	B.

CONDENSER COIL SCHEDULE

TAG No	TYPE	TOTAL REJECTION CAPACITY	REFRIG	FINS	TUBES	TOTAL AIRFLOW	TEMP AIR IN	TEMP AIR OUT	No OF ROWS	No OF FINS	CONDENSER FANS					REMARKS
											TAG No	QTY	AIR FLOW EACH	MOTOR		
														HP EACH	ELECT	
A524801 A524802	AIR COOLED	503 MBH	R-410A	ALUM/W COATING	COPPER	22,850 ACFM	95°F	117°F	24	10 FPI	A194842 A194843 A194844 A194845	4	5,780 SCFM	5	480/3/60 TEFC, 3,600 RPM	SEE SHEET M-4B FOR FURTHER INFORMATION

EVAPORATOR COIL SCHEDULE

TAG No	AIR FLOW RATE (lbm/min)	TOTAL CAPACITY	AIR ENTERING COIL	AIR LEAVING COIL	OPERATING PRESSURE AIR SIDE	No OF ROWS	No OF FINS	AIR PRESS DROP (IN W.C.)	REMARKS
A524754	300	738 MBH	117°F DB 95.3°F WB	40.2°F DB 40.1°F WB	17.7 PSIA	26 x 12	17 FPI	1.06	SEE SHEET M-9D FOR FURTHER INFORMATION

RE-HEAT COIL SCHEDULE

TAG No	CAPACITY MBH	AIR FLOW RATE (lbm/min)	ENTERING AIR TEMP °F DB	LEAVING MAX °F DB	EWT	LWT	GPM MAX/MIN A.	WATER PRESS DROP FT	AIR PRESS DROP	REMARKS
A524760	74.5	85	45°F	105°F	195°F	178	9.0	6.0	0.73 IN WG	OUTLET 1 SEE SHEET M-9E FOR FURTHER INFORMATION B.
A524762	63	72	45°F	105°F	195°F	186	15	5.21	0.57 IN WG	OUTLET 3 B.
A524761	87	100	45°F	105°F	195°F	157	4.7	.88	0.23 IN WG	OUTLET 2 B.

WRAP-AROUND COIL SCHEDULE

TAG No	SECTION	AIR FLOW	KSC CONDITIONS			NUMBER			AIR PRESS DROP (IN W.C.)	REMARKS
			ENTERING AIR TEMP	LEAVING AIR TEMP	GPM A.	ROWS	FINS	TUBES		
A529816	PRE-COOL SECTION	4000 SCFM	114.6°F DB 88.9°F WB	104.5°F DB 86.8°F WB	9.2	1	12 FPI	22	0.07	
A529817	RE-HEAT SECTION	4000 SCFM	40.5°F DB 40.3°F WB	50.5°F DB 45.4°F WB	9.2	1	12 FPI	22	0.07	

HEAT REJECTION COIL SCHEDULE

TAG No	SECTION	AIR FLOW	KSC CONDITIONS			NUMBER			AIR PRESS DROP (IN W.C.)	REMARKS
			ENTERING AIR TEMP	LEAVING AIR TEMP	GPM A.	ROWS	FINS	TUBES		
A524752	ABSORPTION SECTION	4000 SCFM	167°F DB 96°F WB	117°F DB 95.3°F WB	13.75	9	18 FPI	26	0.92	SEE SHEET M-9D FOR FURTHER INFORMATION B.
A524764	REJECTION SECTION	9300 SCFM	95°F DB 85°F WB	118°F	13.75	6	11 FPI	12	1.40	B.

SPECIFIC NOTES:

A. 20% PROPYLENE GLYCOL, 80% WATER.

B. SEE SHEETS M-1A & M-1B FOR MODEL SPECIFIC INFORMATION.

HEATER SCHEDULE

TAG No	HTG CAP	CASE SIZE	FLOWING MEDIA	V/ø/HZ	No CKTS	AMPS PER CKT	REMARKS
A524796	40 KW	5"	A.	480/3/60	1	36.1	SET WORKING TEMP TO 195°F
A524797	40 KW	5"	A.	480/3/60	1	36.1	

HEAT REJECTION FAN SCHEDULE

TAG No	FAN						ELECTRICAL			
	TYPE	QTY	AIR FLOW	RPM	PRESSURE DROP (IN W.C.)	MODEL	V/ø/HZ	RPM	HP	MOTOR
A524791 A524792 A524793	AXIAL H SERIES	3	3,100 SCFM (EACH)	3450	1.40	MULTI-WING P/N 14/6/-6/35/AL/3HL B.	230/460/3/60	3450	2	FRAME: 145 TZ TEAO B.

PUMP SCHEDULE

TAG No	SERVICE	TYPE	PUMPING TEMP °F	GPM	TDH LIQUID	PUMP RPM	ELECTRICAL			REMARKS
							V/ø/HZ	HP	MOTOR	
A524795	HOT WATER CIRCULATION PUMP	CENT	195	29	15.4 FT	1750	115/1/60	1/3	TEFC	B.
A524809	WRAP-AROUND COIL CIRCULATION PUMP	CENT	85	9.2	12 FT	1750	115/1/60	1/6	TEFC	B.
A524810	HEAT REJECTION CIRCULATION PUMP	CENT	130	13.75	40 FT	3500	115/1/60	1/2	TEFC	B.

BLOWER SCHEDULE

TAG No	TYPE	GAS	FLOW RATE	INLET PRESS MAX PRESS	DISCH PRESS	INLET TEMP SUMMER	INLET TEMP WINTER	SPECIFIC HEAT RATIO	MOTOR				REMARKS
									HP	ELECT	MAX FULL LOAD	ACCESSORIES	
A524751	CENTRIFUGAL	AIR	300 LBS/MIN	15.0 PSIA	19.2 PSIA	95°F DB 85°F WB	30.2°F	1.395	125	460/3/60	150A	INLET VANE DAMPER	SPENCER TURBINE CO CAT No 40125-H-MOD

SYM	ZONE	DESCRIPTION	DATE	APPROVAL
		REVISIONS		

SIGNATURES		DATE
DRAFTER	T. JOBE	05/06/11
CHECKER	D. MAY	05/06/11
ENGINEER	A. JACQUES	05/06/11
	R. WITHERSPOON	05/06/11
	R. FRANCO	05/06/11
SUBMITTED	T.O. ADAMS	05/06/11
APPROVED	E.A. THAXTON	DATE 05/06/11

NATIONAL AERONAUTICS AND SPACE ADMINISTRATION
JOHN F. KENNEDY SPACE CENTER, NASA
KENNEDY SPACE CENTER, FLORIDA

ASSEMBLY DRAWINGS

MPPU REFURBISHMENT DESIGN
ENVIRONMENTAL CONTROL SYSTEM
SCHEDULES

TITLE

SIZE F | DWG. NO. 584F0301001 | REV –

PROJ. NO. 95255 | SHEET | OF

M-20

I:\95255\DRAWINGS\MECH\M-20.DWG | 15-MAR-2011 15:13 | JOBEL

EAR 99

KSC FORM 1-11 (REV. 3/76) (C/G 3/93)

FOR ANY PURPOSE OTHER THAN IN CONNECTION WITH A DEFINITELY RELATED GOVERNMENT PROCUREMENT OPERATION, THE UNITED STATES GOVERNMENT THEREBY INCURS NO RESPONSIBILITY NOR ANY OBLIGATION WHATSOEVER; AND THE FACT THAT THE GOVERNMENT MAY HAVE FORMULATED, FURNISHED, OR IN ANY WAY SUPPLIED THE SAID DRAWINGS, SPECIFICATIONS OR ANY OTHER DATA IS NOT TO BE REGARDED BY IMPLICATION OR OTHERWISE IN ANY MANNER LICENSING THE HOLDER OR ANY OTHER PERSONS OR CORPORATION, OR CONVEYING ANY RIGHTS OR PERMISSION TO MANUFACTURE, USE, OR SELL ANY PATENTED INVENTION THAT IN ANY WAY BE RELATED THERETO.

EAR 99 – NO LICENSE REQUIRED

The information contained in this document is technical/scientific content, but not technical data as defined by the International Traffic in Arms (ITAR) or as defined by the Export Administration Regulations (EAR), and therefore is EAR 99 NLR, no export license required, suitable for public release. (General Prohibition Six (Embargo) applies to all items subject to the EAR, i.e. items on the CCL and within EAR 99 NLR. You may not make an export or reexport contrary to the prohibitions of part 746 (Embargos and Other Special Controls) of the EAR and 22 CFR part 126.1 of the ITAR).

EDDR # 113043 : NASA KSC Export Control Office (321-867-6039)

EAR 99

NOTES:

1. THIS SCHEMATIC IS TO BE USED IN DEVELOPING AND WRITING THE SYSTEM, CLS ENVIRONMENTAL CONTROL, PROCEDURES. TO AID IN WRITING THESE GOAL LANGUAGE PROCEDURES, ALL APPLICABLE MEASUREMENT NUMBERS HAVE BEEN INCLUDED.
2. COMPONENTS ARE DEPICTED IN A POWERED DOWN OR DE-ENERGIZED STATE.
3. COMPONENT SYMBOLOGY AS SHOWN IN LEGEND OR DEFINED ON BODY OF DRAWING.
4. ALL PRESSURES ARE GAUGE UNLESS OTHERWISE SPECIFIED.
5. THIS EMCD DOCUMENTS THE DESIGN OF THE MINI PORTABLE PURGE UNIT AS OF THE DATE OF THIS DRAWING. THE DESIGN DOES NOT YET DOCUMENT ALL OF THE COMPONENTS THAT WILL BE INCLUDED IN THE FINISHED MPPU. THIS DRAWING DOES NOT DOCUMENT THE CONTROLLER OR INSTRUMENTATION INVOLVED WITH THE REFRIGERATION SYSTEM. THIS EMC WILL BE UPDATED BY DRAWING REVISION ONCE COMPLETE DEFINITION OF MPPU IS KNOWN.

LEGEND:

- PNEUMATIC FLOW
- LIQUID FLOW
- MAIN AIR FLOW
- AIR VENT
- CURRENT TRANSDUCER (C)
- TEMPERATURE GAUGE
- TEMPERATURE TRANSDUCER
- TEMPERATURE AND HUMIDITY TRANSDUCER (H)
- FILTER, ACTIVATED CARBON ADSORPTIVE TYPE, AND PRE-FILTER AND HEPA FILTER (HIGH EFFECIENCY PARTICULATE AIR) (C, H)
- PRESSURE GAUGE
- PRESSURE TRANSDUCER
- MANUALLY OPERATED FLOW CONTROL VALVE
- MOTORIZED 3-WAY FLOW CONTROL VALVE W/ 2 POSITION INDICATING SWITCHES (M)
- MOTORIZED FLOW CONTROL VALVE W/ POSITION INDICATING TRANSDUCER & 2 POSITION INDICATING SWITCHES (M)
- A:B:CC — MPPU PLC I/O WHERE:
  "A" = PLC NUMBER
  (1 IS PRIMARY, THERE IS NO SECONDARY)
  "B" = CARD SLOT
  "CC" = CHANNEL
- ELECTRIC HEATER
- FILTER
- FAN
- HEAT EXCHANGER, LIQUID IN TUBE
- FLOW DIFFUSING SCREEN
- TURBO-COMPRESSOR / PUMP
- PITOT TUBE ARRAY
- FLOW SENSOR (FS)

SYM	ZONE	DESCRIPTION	DATE	APPROVAL

REVISIONS

SIGNATURES		DATE
DRAFTER	T. JOBE	05/06/11
CHECKER	J. LOBODA	05/06/11
ENGINEER	A. JACQUES	05/06/11
	R. WITHERSPOON	05/06/11
	R. FRANCO	05/06/11
SUBMITTED	T.O. ADAMS	05/06/11
APPROVED	E.A. THAXTON	05/06/11

NATIONAL AERONAUTICS AND SPACE ADMINISTRATION
JOHN F. KENNEDY SPACE CENTER, NASA
KENNEDY SPACE CENTER, FLORIDA

ASSEMBLY DRAWINGS

MPPU REFURBISHMENT DESIGN
ENVIRONMENTAL CONTROL SYSTEM
ELECTRO MECHANICAL CONTROL DIAGRAM
EMCD

SIZE F | DWG. NO. 584F0301001 | REV –

TITLE | PROJ. NO. 95255 | SHEET | OF

M-21

P:\95255\DRAWINGS\MECH\M-21.DWG 02-MAY-2011 16:11 JOBEL

KSC FORM 1-11 (REV. 3/76) (C/G 3/93)

EAR 99

FOR ANY PURPOSE OTHER THAN IN CONNECTION WITH A DEFINITELY RELATED GOVERNMENT PROCUREMENT OPERATION, THE UNITED STATES GOVERNMENT THEREBY INCURS NO RESPONSIBILITY NOR ANY OBLIGATION WHATSOEVER, AND THE FACT THAT THE GOVERNMENT MAY HAVE FORMULATED, FURNISHED, OR IN ANY WAY SUPPLIED THE SAID DRAWINGS, SPECIFICATIONS OR ANY OTHER DATA IS NOT TO BE REGARDED BY IMPLICATION OR OTHERWISE IN ANY MANNER LICENSING THE HOLDER OR ANY OTHER PERSONS OR CORPORATION, OR CONVEYING ANY RIGHTS OR PERMISSION TO MANUFACTURE, USE, OR SELL ANY PATENTED INVENTION THAT IN ANY WAY BE RELATED THERETO.

EAR 99 - NO LICENSE REQUIRED

The information contained in this document is technically content, but not technical data as defined by the International Traffic in Arms Regulations (ITAR) or the Export Administration Regulations (EAR), and therefore is EAR 99 NLR, no export license required, suitable for public release. (General Prohibition Six (Embargo) applies to all items subject to the EAR, i.e. items on the CCL and within EAR 99 NLR. You may not make an export or reexport contrary to the provisions of part 746 (Embargos and Other Special Controls) of the EAR and 22 CFR part 126.1 of the ITAR).

EDDR # 113043 : NASA KSC Export Control Office (321- 867-6009)

EAR 99

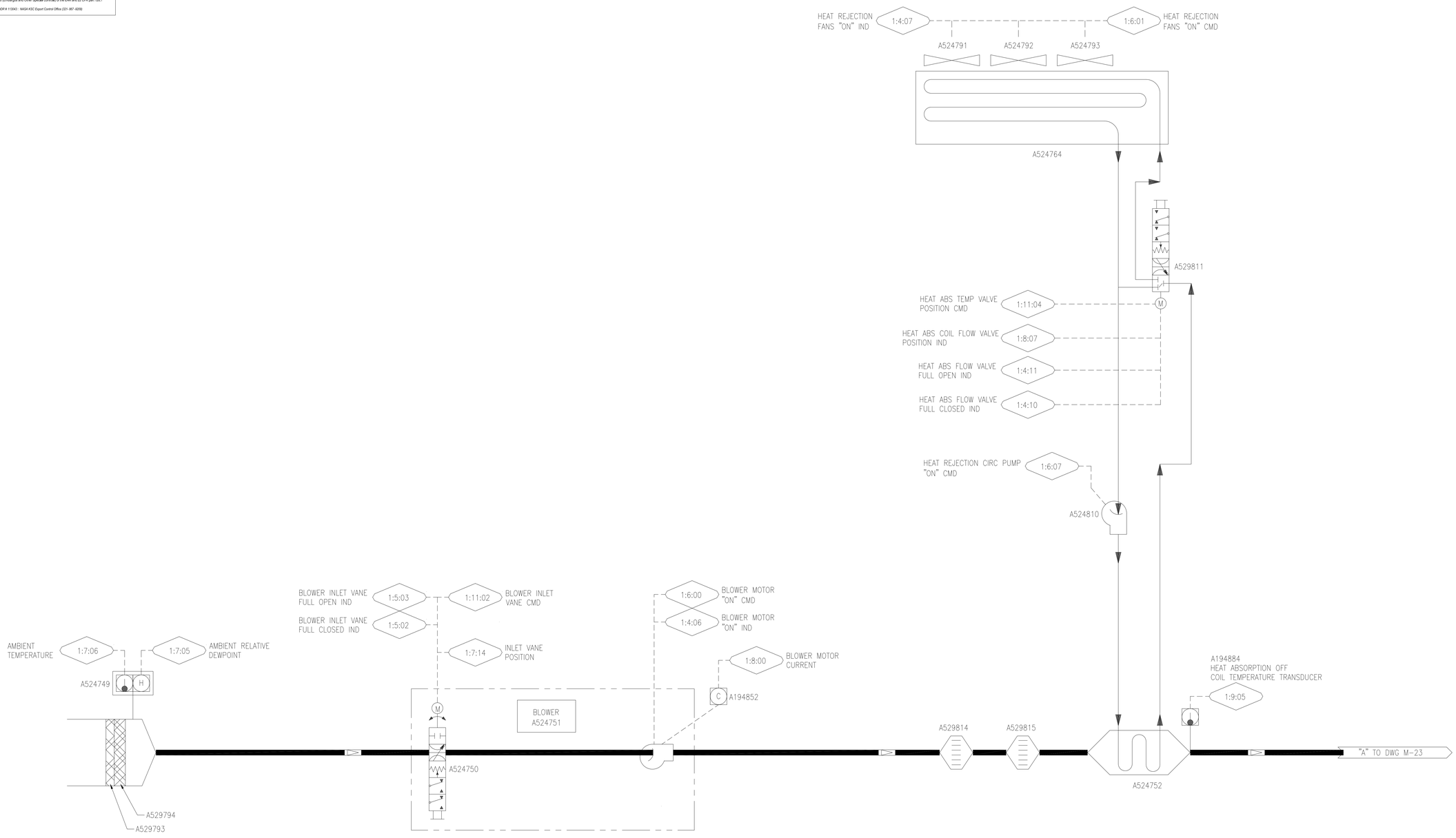

SYM	ZONE	DESCRIPTION	DATE	APPROVAL

REVISIONS

SIGNATURES		DATE
DRAFTER	T. JOBE	05/06/11
CHECKER	J. LOBODA	05/06/11
ENGINEER	A. JACQUES	05/06/11
	R. WITHERSPOON	05/06/11
	R. FRANCO	05/06/11
SUBMITTED	T.O. ADAMS	05/06/11
APPROVED	E.A. THAXTON	05/06/11

NATIONAL AERONAUTICS AND SPACE ADMINISTRATION
JOHN F. KENNEDY SPACE CENTER, NASA
KENNEDY SPACE CENTER, FLORIDA

ASSEMBLY DRAWINGS

MPPU REFURBISHMENT DESIGN
ENVIRONMENTAL CONTROL SYSTEM
ELECTRO MECHANICAL CONTROL DIAGRAM
EMCD

SIZE F | DWG. NO. 584F0301001 | REV –

TITLE | PROJ. NO. 95255 | SHEET | OF

M-22

P:\95255\DRAWINGS\MECH\M-22.DWG 02-MAY-2011 16:59 JOBETL

KSC FORM 1-11 (REV. 3/76) (C/G 3/93)

EAR 99

FOR ANY PURPOSE OTHER THAN IN CONNECTION WITH A DEFINITELY RELATED GOVERNMENT PROCUREMENT OPERATION, THE UNITED STATES GOVERNMENT THEREBY INCURS NO RESPONSIBILITY NOR ANY OBLIGATION WHATSOEVER, AND THE FACT THAT THE GOVERNMENT MAY HAVE FORMULATED, FURNISHED, OR IN ANY WAY SUPPLIED THE SAID DRAWINGS, SPECIFICATIONS OR ANY OTHER DATA IS NOT TO BE REGARDED BY IMPLICATION OR OTHERWISE IN ANY MANNER LICENSING THE HOLDER OR ANY OTHER PERSONS OR CORPORATION, OR CONVEYING ANY RIGHTS OR PERMISSION TO MANUFACTURE, USE, OR SELL ANY PATENTED INVENTION THAT IN ANY WAY BE RELATED THERETO.

EAR 99 - NO LICENSE REQUIRED

The information contained in the document is technically content, but not technical data as defined by the International Traffic in Arms Regulations (ITAR) or the Export Administration Regulations (EAR), and therefore is EAR 99 NLR, no export license required, suitable for public release. (General Prohibition Six (Embargo) applies to all items subject to the EAR, i.e. items on the CCL and within EAR 99 NLR. You may not make an export or reexport contrary to the provisions of part 746 (Embargos and Other Special Controls) of the EAR and 22 CFR part 126.1 of the ITAR).

ECCN # 113043 - NASA KSC Export Control Office (321- 867-0209)

EAR 99

SPECIFIC NOTES:

A. REFRIGERATION SYSTEM HAS INDEPENDENT CONTROL SOFTWARE. FOR DETAILS ON REFRIGERATION SYSTEM CONTROL SEE DRAWING V-2B & REFRIGERATION SPEC 11820.

B. REFRIGERATION CONTROL SYSTEM SHALL COMMUNICATE WITH THE MAIN MPPU PLC BY MEANS OF ETHERNET & HARDWIRED ANALOG & DIGITAL I/O. CONTRACTOR TO COORDINATE CONMMUNICATIONS NETWORK. (REF SPEC 11820).

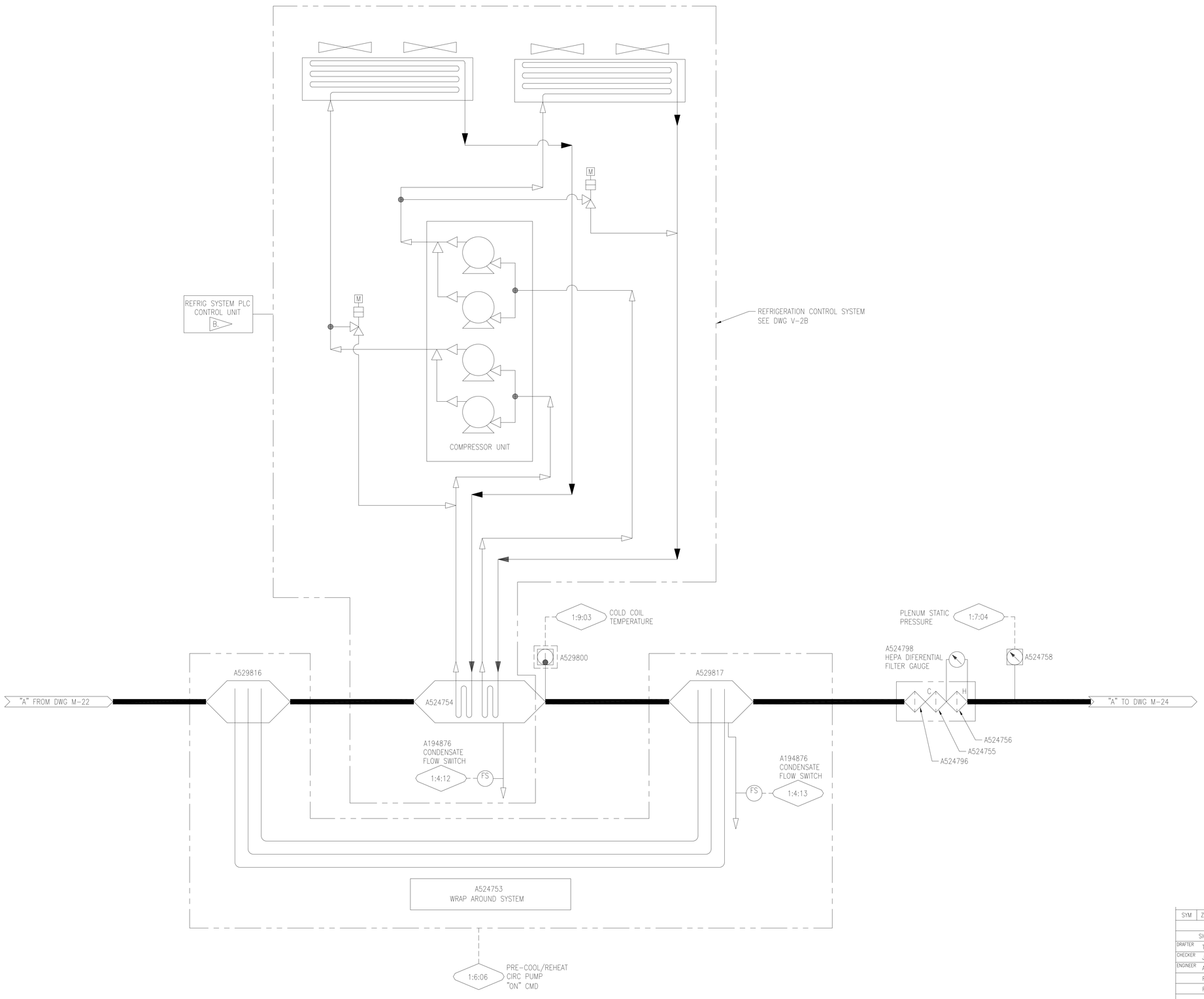

SYM	ZONE	DESCRIPTION	DATE	APPROVAL

REVISIONS

SIGNATURES		DATE
DRAFTER	T. JOBE	05/06/11
CHECKER	J. LOBODA	05/06/11
ENGINEER	A. JACQUES	05/06/11
	R. WITHERSPOON	05/06/11
	R. FRANCO	05/06/11
SUBMITTED	T.O. ADAMS	05/06/11
APPROVED	E.A. THAXTON	DATE 05/06/11
TITLE		

NATIONAL AERONAUTICS AND SPACE ADMINISTRATION
JOHN F. KENNEDY SPACE CENTER, NASA
KENNEDY SPACE CENTER, FLORIDA

ASSEMBLY DRAWINGS

MPPU REFURBISHMENT DESIGN
ENVIRONMENTAL CONTROL SYSTEM
ELECTRO MECHANICAL CONTROL DIAGRAM
EMCD

SIZE F | DWG. NO. 584F0301001 | REV –

PROJ. NO. 95255 | SHEET OF

M-23

P:\95255\DRAWINGS\MECH\M-23.DWG 02-MAY-2011 16:13 JOBETL

KSC FORM 1-11 (REV. 3/76) (C/G 3/93)

EAR 99

FOR ANY PURPOSE OTHER THAN IN CONNECTION WITH A DEFINITELY RELATED GOVERNMENT PROCUREMENT OPERATION, THE UNITED STATES GOVERNMENT THEREBY INCURS NO RESPONSIBILITY NOR ANY OBLIGATION WHATSOEVER; AND THE FACT THAT THE GOVERNMENT MAY HAVE FORMULATED, FURNISHED, OR IN ANY WAY SUPPLIED THE SAID DRAWINGS, SPECIFICATIONS OR ANY OTHER DATA IS NOT TO BE REGARDED BY IMPLICATION OR OTHERWISE IN ANY MANNER LICENSING THE HOLDER OR ANY OTHER PERSONS OR CORPORATION, OR CONVEYING ANY RIGHTS OR PERMISSION TO MANUFACTURE, USE, OR SELL ANY PATENTED INVENTION THAT IN ANY WAY BE RELATED THERETO.

EAR 99 – NO LICENSE REQUIRED

The information contained in this document is technical in content, but not technical data as defined by the International Traffic in Arms (ITAR) or the Export Administration Regulations (EAR), and therefore is EAR 99 NLR, no export license required, suitable for public release. (General Prohibition Six (Embargo) applies to all items subject to the EAR, i.e. items on the CCL and within EAR 99 NLR. You may not make an export or reexport contrary to the provisions of part 746 (Embargos and Other Special Controls) of the EAR and 22 CFR part 126.1 of the ITAR).

EDDR # 113043 : NASA KSC Export Control Office (321- 867- 6039)

EAR 99

PLENUM DUMP VALVE FULL OPEN IND 1:4:05
PLENUM DUMP VALVE FULL CLOSED IND 1:4:04
1:11:03 PLENUM DUMP VALVE FLOW COMMAND CMD
1:7:15 DUMP VALVE POSITION
A524757
1:6:05 PLENUM REHEAT PUMP "ON" COMMAND
A524795
HEATER #1 POWER CONTROLLER % POWER 1:11:00
DUCT HEATER #1 "ENABLE" CMD 1:6:03
DUCT HEATER #1 "ON" IND 1:4:08
A529808
A524796
1:11:05 HEATER #2 POWER CONTROLLER % POWER
1:6:04 DUCT HEATER #2 "ENABLE" CMD
1:4:09 DUCT HEATER #2 "ON" IND
A524797
1:9:04 HEATER LOOP TEMP
A194879
OUTLET 3 DUCT TEMP VALVE FULL OPEN IND 1:5:07
OUTLET 3 DUCT TEMP VALVE FULL CLOSED IND 1:5:06
1:10:03 OUTLET 3 DUCT TEMP VALVE CMD
1:7:10 OUTLET 3 DUCT TEMP VALVE POSITION
A524768
A524794
A529813 MANUAL RELIEF
A529807
A524762
OUTLET 3 DUCT PRESSURE 1:7:00
OUTLET 3 DUCT UPSTREAM STATIC PRESSURE 1:8:01
A524771
A524774
A529921 TEMPERATURE GAUGE
A524777
OUTLET 3 DUCT FLOW VALVE FULL OPEN IND 1:5:01
OUTLET 3 DUCT FLOW VALVE FULL CLOSED IND 1:5:00
1:10:00 OUTLET 3 DUCT FLOW VALVE CMD
1:7:07 OUTLET 3 DUCT FLOW VALVE POSITION
1:9:00 OUTLET 3 DUCT TEMPERATURE
A524780
1:8:04 OUTLET 3 DUCT DISCHARGE TOTAL PRESSURE
A524786
A524789
A524783
A529799
OUTLET 3

OUTLET 2 DUCT TEMP VALVE FULL OPEN IND 1:5:09
OUTLET 2 DUCT TEMP VALVE FULL CLOSED IND 1:5:08
1:10:04 OUTLET 2 DUCT TEMP VALVE CMD
1:7:11 OUTLET 2 DUCT TEMP VALVE POSITION
A524767
A529812 MANUAL RELIEF
A524761
OUTLET 2 DUCT PRESSURE 1:7:01
OUTLET 2 DUCT UPSTREAM STATIC PRESSURE 1:8:02
A524770
A524773
A529919 TEMPERATURE GAUGE
A524776
OUTLET 2 DUCT FLOW VALVE FULL OPEN IND 1:5:03
OUTLET 2 DUCT FLOW VALVE FULL CLOSED IND 1:5:02
1:10:01 OUTLET 2 DUCT FLOW VALVE CMD
1:7:08 OUTLET 2 DUCT FLOW VALVE POSITION
1:9:01 OUTLET 2 DUCT TEMPERATURE
A524779
1:8:05 OUTLET 2 DUCT DISCHARGE TOTAL PRESSURE
A524785
A524788
A524782
A529798
OUTLET 2

"A" FROM M-23
OUTLET 1 DUCT TEMP VALVE FULL OPEN IND 1:5:11
OUTLET 1 DUCT TEMP VALVE FULL CLOSED IND 1:5:10
1:10:05 OUTLET 1 DUCT TEMP VALVE CMD
1:7:12 OUTLET 1 DUCT TEMP VALVE POSITION
A524766
A529811 MANUAL RELIEF
A524760
OUTLET 1 DUCT PRESSURE 1:7:02
OUTLET 1 DUCT UPSTREAM STATIC PRESSURE 1:8:03
A524769
A524772
A529920 TEMPERATURE GAUGE
A524775
OUTLET 1 DUCT FLOW VALVE FULL OPEN IND 1:5:05
OUTLET 1 DUCT FLOW VALVE FULL CLOSED IND 1:5:04
1:10:02 OUTLET 1 DUCT FLOW VALVE CMD
1:7:09 OUTLET 1 DUCT FLOW VALVE POSITION
1:9:02 OUTLET 1 DUCT TEMPERATURE
A524778
1:8:06 OUTLET 1 DUCT DISCHARGE TOTAL PRESSURE
A524784
A524787
A524781
A529797
OUTLET 1

1:8:03 DUCT TEMP CONTROL PRESSURE
A524790
DUCT TEMP BYPASS VALVE FULL OPEN IND 1:4:01
DUCT TEMP BYPASS VALVE FULL CLOSED IND 1:4:00
1:11:01 DUCT TEMP BYPASS VALVE CMD
1:7:13 DUCT TEMP BYPASS VALVE POSITION
A524765

SYM	ZONE	DESCRIPTION	DATE	APPROVAL
		REVISIONS		

SIGNATURES		DATE
DRAFTER	T. JOBE	05/06/11
CHECKER	J. LOBODA	05/06/11
ENGINEER	A. JACQUES	05/06/11
	R. WITHERSPOON	05/06/11
	R. FRANCO	05/06/11
SUBMITTED	T.O. ADAMS	05/06/11
APPROVED	E.A. THAXTON	05/06/11

NATIONAL AERONAUTICS AND SPACE ADMINISTRATION
JOHN F. KENNEDY SPACE CENTER, NASA
KENNEDY SPACE CENTER, FLORIDA

ASSEMBLY DRAWINGS
MPPU REFURBISHMENT DESIGN
ENVIRONMENTAL CONTROL SYSTEM
ELECTRO MECHANICAL CONTROL DIAGRAM
EMCD

SIZE F | DWG. NO. 584F0301001 | REV –
PROJ. NO. 95255 | SHEET | OF

TITLE

M-24

P:\95255\DRAWINGS\MECH\M-24.DWG 03-MAY-2011 10:36 JOBETL

KSC FORM 1-11 (REV. 3/76) (C/G 3/93)

EAR 99

FOR ANY PURPOSE OTHER THAN IN CONNECTION WITH A DEFINITELY RELATED GOVERNMENT PROCUREMENT OPERATION, THE UNITED STATES GOVERNMENT THEREBY INCURS NO RESPONSIBILITY NOR ANY OBLIGATION WHATSOEVER; AND THE FACT THAT THE GOVERNMENT MAY HAVE FORMULATED, FURNISHED, OR IN ANY WAY SUPPLIED THE SAID DRAWINGS, SPECIFICATIONS OR ANY OTHER DATA IS NOT TO BE REGARDED BY IMPLICATION OR OTHERWISE IN ANY MANNER LICENSING THE HOLDER OR ANY OTHER PERSONS OR CORPORATION, OR CONVEYING ANY RIGHTS OR PERMISSION TO MANUFACTURE, USE, OR SELL ANY PATENTED INVENTION THAT IN ANY WAY BE RELATED THERETO.

EAR 99 – NO LICENSE REQUIRED

The information contained in this document is technical in content, but not technical data as defined by the International Traffic in Arms (ITAR) or the Export Administration Regulations (EAR), and therefore is EAR 99 NLR, not subject to export control, suitable for public release. (General Prohibition Six (Embargo) applies to all items subject to the EAR, i.e. items on the CCL and within EAR 99 NLR.. You may not make an export or reexport contrary to the provisions of part 746 (Embargos and Other Special Controls) of the EAR and 22 CFR part 126.1 of the ITAR).

EDDR # 113043 : NASA KSC Export Control Office (321- 867-9209)

EAR 99

BILL OF MATERIALS

ITEM	QTY	DESCRIPTION	MANUFACTURER	PART NUMBER
1	1	NEMA 4X ENCLOSURE 16"x14"x6" SST	HOFFMAN	A16H1406SSLP
2	1	ENCLOSURE PANEL 14.75"x12.88" SST	HOFFMAN	A-16P14SS
3	A/R	CONDUIT FITTING INSULATED (SIZE AS REQUIRED)	LIQUIDTITE	T&B LT SERIES
4	30	TERMINAL BLOCK 110VAC (UT-4)	PHOENIX CONTACT	3044102
5	2	END STOP FOR TERMINAL BLOCKS (E/UK)	PHOENIX CONTACT	1201442
6	A/R	WIRE DUCT (2" x 1") COVER PART# (C2WH6)	PANDUIT	G2X1WH6
7	15	GROUND TERMINAL BLOCK 110VAC (UT4-PE)	PHOENIX CONTACT	3044128
8	3	PARTITION PLATE FOR UT-4 TERMINAL BLOCKS	PHOENIX CONTACT	3047167
9	3	LABEL CARRIER (UBE/D)	PHOENIX CONTACT	0800307
10	A/R	35mm PERFORATED DINRAIL (NS35/7,5)	PHOENIX CONTACT	1207640

SPECIFIC NOTES:

A. FINAL CONDUIT PENETRATIONS SHALL BE DETERMINED BY CONTRACTOR.

B. DISTRIBUTION BOX SHALL BE FIELD FIT & MOUNTED IN LOCATION CENTRAL TO CONTROL VALVES.

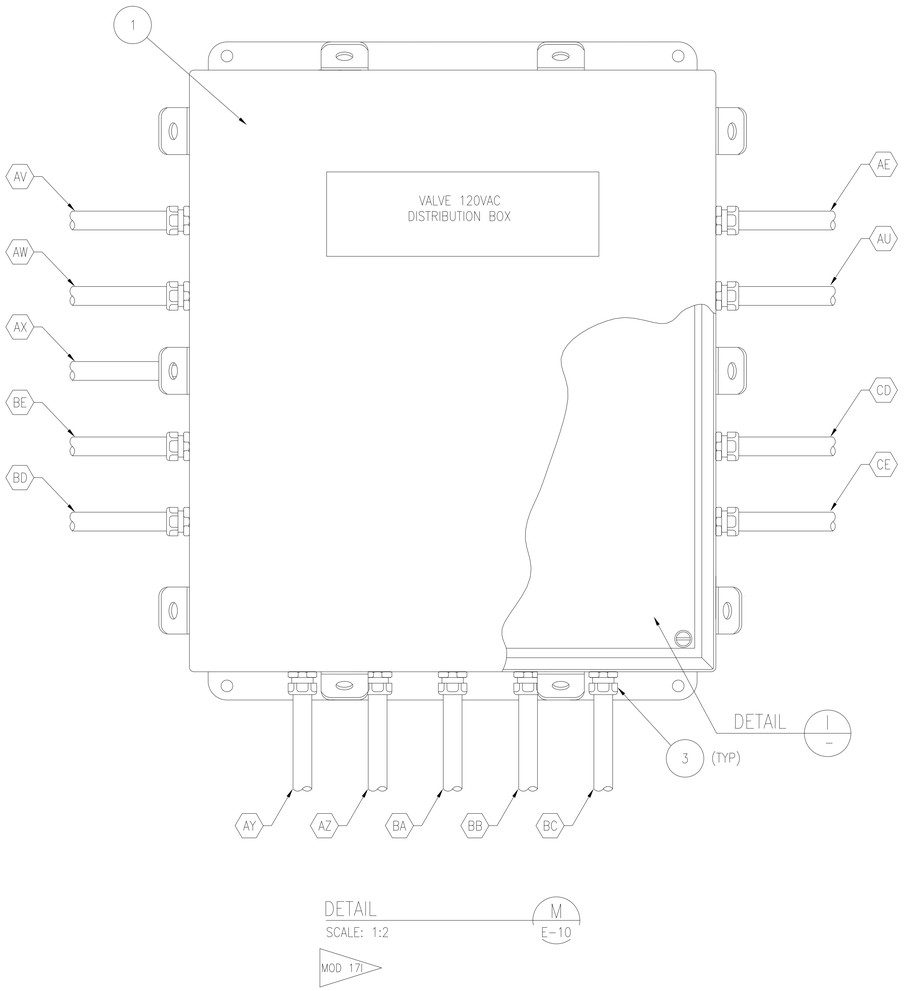

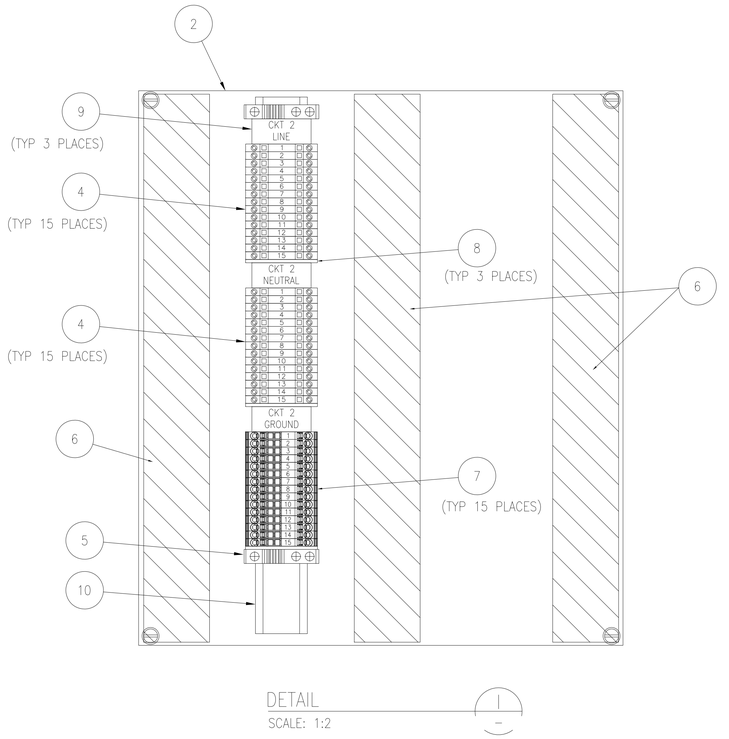

SYM	ZONE	DESCRIPTION	DATE	APPROVAL
		REVISIONS		

SIGNATURES		DATE
DRAFTER	T. JOBE	05/06/11
CHECKER	J. WHITEFORD	05/06/11
ENGINEER	S. RITTER	05/06/11
	R. WITHERSPOON	05/06/11
	R. FRANCO	05/06/11
SUBMITTED	T.O. ADAMS	05/06/11
APPROVED	E.A. THAXTON	DATE 05/06/11

NATIONAL AERONAUTICS AND SPACE ADMINISTRATION
JOHN F. KENNEDY SPACE CENTER, NASA
KENNEDY SPACE CENTER, FLORIDA

ASSEMBLY DRAWINGS

MPPU REFURBISHMENT DESIGN
ENVIRONMENTAL CONTROL SYSTEM
ENCLOSURE LAYOUTS & DETAILS
VALVE 120VAC DISTRIBUTION BOX

SIZE	DWG. NO.	REV
F	584F0301001	—
PROJ. NO. 95255	SHEET	OF

E-19

P:\95255\DRAWINGS\ELECT\E-19.DWG 18-MAR-2011 09:12 JOBETL

KSC FORM 1-11 (REV. 3/76) (C/G 3/93)

EAR 99

FOR ANY PURPOSE OTHER THAN IN CONNECTION WITH A DEFINITELY RELATED GOVERNMENT PROCUREMENT OPERATION, THE UNITED STATES GOVERNMENT THEREBY INCURS NO RESPONSIBILITY NOR ANY OBLIGATION WHATSOEVER; AND THE FACT THAT THE GOVERNMENT MAY HAVE FORMULATED, FURNISHED, OR IN ANY WAY SUPPLIED THE SAID DRAWINGS, SPECIFICATIONS OR ANY OTHER DATA IS NOT TO BE REGARDED BY IMPLICATION OR OTHERWISE IN ANY MANNER LICENSING THE HOLDER OR ANY OTHER PERSONS OR CORPORATION, OR CONVEYING ANY RIGHTS OR PERMISSION TO MANUFACTURE, USE, OR SELL ANY PATENTED INVENTION THAT IN ANY WAY BE RELATED THERETO.

EAR 99 – NO LICENSE REQUIRED

The Information contained in this document is technical in content, but not technical data as defined by the International Traffic in Arms (ITAR) or the Export Administration Regulations (EAR), and therefore is EAR 99 NLR, meaning it is non-regulated, suitable for public release. (General Prohibition Six (Embargo) applies to all items subject to the EAR, i.e. items on the CCL and within EAR 99 NLR. You may not make an export or reexport contrary to the provisions of part 746 (Embargos and Other Special Controls) of the EAR and 22 CFR part 126.1 of the ITAR).

EDDR # 113043 : NASA KSC Export Control Office (321- 867-9209)

EAR 99

SYMBOL LEGEND

(A)	CABLE OR CONDUIT	⏚	GROUND
	CIRCUIT BREAKER		RELAY COIL
	TRANSFORMER		RELAY CONTACT, NORMALLY OPEN
(#)	MOTOR (# = HORSEPOWER)		RELAY CONTACT, NORMALLY CLOSED
	SHIELD		RECTIFIER
	THERMAL OVERLOAD	>>	PLUG AND RECEPTACLE
	CAPACITOR		

GENERAL ELECTRICAL NOTES:

1. ROUTING OF ALL ELECTRICAL CABLES AND CONDUIT SHALL BE FIELD DETERMINED. LOCATION OF CONDUIT AND CABLE ENTRANCES INTO ELECTRICAL ENCLOSURES SHALL BE FIELD DETERMINED.
2. ALL ELECTRICAL EQUIPMENT SHALL BE FABRICATED PER LATEST REVISION OF KSC-STD-E-165.
3. ALL ELECTRICAL MATERIAL FURNISHED FOR THIS PROJECT SHALL BE LISTED AS UL APPROVED AND SUITABLE FOR INSTALLATION IN AREAS SPECIFIED IN THIS DESIGN PACKAGE.
4. ALL ELECTRICAL EQUIPMENT SHALL BE INSTALLED AND ASSEMBLED PER THE LATEST REVISION OF KSC-STD-E-166.
5. ALL ELECTRICAL WORK SHALL BE IN ACCORDANCE WITH THE LATEST REVISION OF THE NATIONAL ELECTRIC CODE, EXCEPT WHERE OVERRIDDEN BY KSC SPECIFICATIONS.
6. UNLESS OTHERWISE SPECIFIED, ALL CONDUCTOR INSULATION USED BY CONTRACTOR SHALL BE TYPE THHN-THWN 600V. ALL CONDUCTORS SHALL BE SIZED AS SPECIFIED. ALL CONDUCTORS SHALL BE COPPER.
7. ALL GROUNDING SHALL BE PER KSC-STD-E-0012.
8. CAP & STOW ALL SPARE CONDUCTORS.
9. WHEN BUILDING THERMOCOUPLE TERMINAL BLOCK ASSEMBLIES, ALTERNATE BETWEEN IRON, CONSTANTAN, AND SHIELD (IF APPLICABLE) TERMINALS.
10. SCHEMATIC SYMBOLOGY PER KSC-STD-152-2, EXCEPT AS NOTED IN LEGEND.
11. ALL CABLES SHALL BE STRIPPED THE MINIMUM LENGTH TO MAINTAIN PROPER SHIELDING.
12. ADHESIVE WIRE LABEL SHALL HAVE CABLE IDENTIFICATION NUMBER PRE TYPED WITH 3mm HIGH VERTICAL GOTHIC LETTERING.
13. APPLY LABEL TO BOTH ENDS OF CABLE.
14. PREPARE WIRE AS SHOWN IN DETAIL 1 BEFORE SOLDERING OR CRIMPING.
15. SOLDER WIRE BUTT SPLICES & SEAL WITH HEAT SHRINKABLE TUBING.

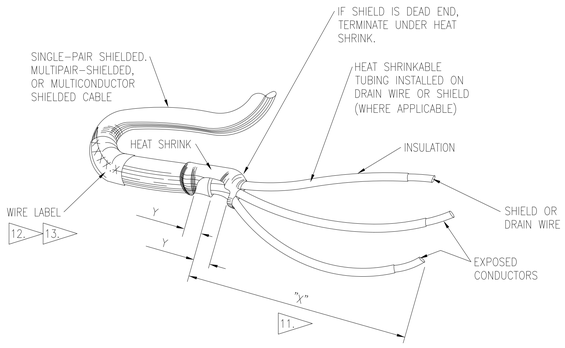

DETAIL 1

SCALE: N.T.S.
CABLE END PREPARATION DETAILS FOR TERMINAL BLOCKS AND THERMOCOUPLES

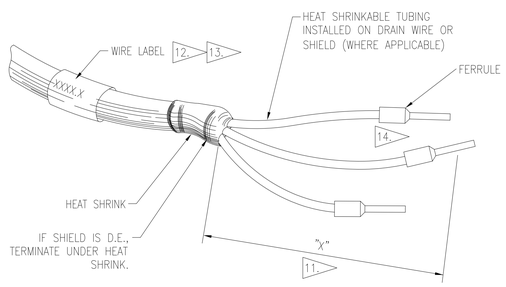

DETAIL 4

SCALE: N.T.S.
CABLE END PREPARATION DETAILS FOR CAGE CLAMP TERMINALS

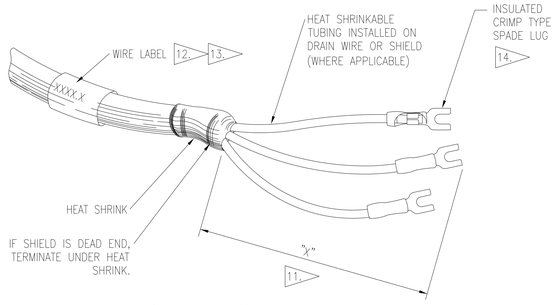

DETAIL 2

SCALE: N.T.S.
CABLE END PREPARATION DETAILS FOR NEFF BARRIER STRIPS AND SCREW TERMINALS

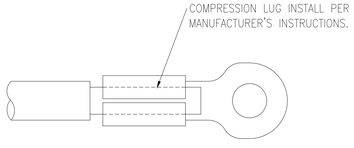

DETAIL 3

SCALE: N.T.S.

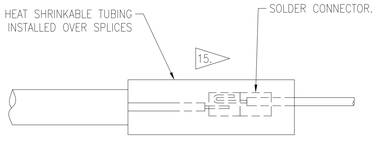

DETAIL 5

SCALE: N.T.S.
BUTT SPLICE CONNECTION DETAIL

SYM	ZONE	DESCRIPTION	DATE	APPROVAL
REVISIONS				

SIGNATURES		DATE
DRAFTER	T. JOBE	05/06/11
CHECKER	J. WHITEFORD	05/06/11
ENGINEER	S. RITTER	05/06/11
	R. WITHERSPOON	05/06/11
	R. FRANCO	05/06/11
SUBMITTED	T.O. ADAMS	05/06/11
APPROVED	E.A. THAXTON	DATE 05/06/11
TITLE		

NATIONAL AERONAUTICS AND SPACE ADMINISTRATION
JOHN F. KENNEDY SPACE CENTER, NASA
KENNEDY SPACE CENTER, FLORIDA

ASSEMBLY DRAWINGS
MPPU REFURBISHMENT DESIGN
ENVIRONMENTAL CONTROL SYSTEM
SYMBOL LEGEND & NOTES

SIZE F | DWG. NO. 584F0301001 | REV –
PROJ. NO. 95255 | SHEET | OF

E-1

P:\95255\DRAWINGS\ELECT\E-1.DWG 06-MAY-2011 10:19 JOBETL

KSC FORM 1-11 (REV. 3/76) (C/G 3/93)

EAR 99

FOR ANY PURPOSE OTHER THAN IN CONNECTION WITH A DEFINITELY RELATED GOVERNMENT PROCUREMENT OPERATION, THE UNITED STATES GOVERNMENT THEREBY INCURS NO RESPONSIBILITY NOR ANY OBLIGATION WHATSOEVER; AND THE FACT THAT THE GOVERNMENT MAY HAVE FORMULATED, FURNISHED, OR IN ANY WAY SUPPLIED THE SAID DRAWINGS, SPECIFICATIONS OR ANY OTHER DATA IS NOT TO BE REGARDED BY IMPLICATION OR OTHERWISE IN ANY MANNER LICENSING THE HOLDER OR ANY OTHER PERSONS OR CORPORATION, OR CONVEYING ANY RIGHTS OR PERMISSION TO MANUFACTURE, USE, OR SELL ANY PATENTED INVENTION THAT IN ANY WAY BE RELATED THERETO.

EAR 99 – NO LICENSE REQUIRED

The information contained in this document is technical in content, but not technical data as defined by the International Traffic in Arms (ITAR) or the Export Administration Regulations (EAR), and therefore is EAR 99 NLR, no export license required, suitable for public release. (General Prohibition Six (Embargo) applies to all items subject to the EAR, i.e. items on the CCL and within EAR 99 NLR. You may not make an export or reexport contrary to the provisions of part 746 (Embargos and Other Special Controls) of the EAR and 22 CFR part 126.1 of the ITAR).

EDDR # 113043 : NASA KSC Export Control Office (321- 867-9209)

EAR 99

MOD 17E MOD 17F

CABLE AND CONDUIT SCHEDULE

CONDUIT IDENT.	CONDUIT	CONDUCTORS	REMARKS	REFERENCE DRAWING
A	NONE	4(4–W33)	GENERATOR/FACILITY POWER TO MPPU	E–6, E–7
B	2–1/2" LIQUIDTIGHT FLEX CONDUIT	4(3–W32, 1–W26)	MPPU INCOMING TO MPPU PANEL	E–6, E–7
C	NONE	4(4–W33)	GENERATOR/FACILITY POWER TO MPPU	E–6, E–7
D	2–1/2" LIQUIDTIGHT FLEX CONDUIT	4(3–W32, 1–W26)	MPPU INCOMING TO MPPU PANEL	E–6, E–7
E	3/4" LIQUIDTIGHT FLEX CONDUIT	4(4–W20)	MPPU PANEL TO TRANSFORMER	E–6, E–7, E–9
F	3/4" LIQUIDTIGHT FLEX CONDUIT	4(3–W22, 1–W21)	MPPU PANEL TO CONDENSER FANS STARTER CABINET	E–6, E–7, E–8
G	2–1/2" LIQUIDTIGHT FLEX CONDUIT	4(3–W32, 1–W24)	MPPU PANEL TO COMPRESSOR CABINET	E–6, E–7
H	2–1/2" LIQUIDTIGHT FLEX CONDUIT	4(3–W32, 1–W25)	MPPU PANEL TO BLOWER STARTER CABINET	E–6, E–7
I	3/4" LIQUIDTIGHT FLEX CONDUIT	4(4–W20)	MPPU PANEL TO STARTER CABINET	E–6, E–7
J	1–1/2" LIQUIDTIGHT FLEX CONDUIT	4(3–W29, 1–W23)	MPPU PANEL TO STARTER CABINET	E–6, E–7
K	1–1/4" LIQUIDTIGHT FLEX CONDUIT	4(3–W26, 1–W22)	STARTER CABINET TO HEATER CONTROLLER	E–6, E–7
L	1–1/4" LIQUIDTIGHT FLEX CONDUIT	4(3–W26, 1–W22)	STARTER CABINET TO HEATER CONTROLLER	E–6, E–7
M	1–1/4" LIQUIDTIGHT FLEX CONDUIT	4(3–W26, 1–W22)	HEATER CONTROLLER TO HTR4B	E–6, E–7
N	1–1/4" LIQUIDTIGHT FLEX CONDUIT	4(3–W26, 1–W22)	HEATER CONTROLLER TO HTR4A	E–6, E–7
O	2–1/2" LIQUIDTIGHT FLEX CONDUIT	4(3–W32, 1–W25)	BLOWER STARTER CABINET TO BLOWER	E–6, E–7
P	1/2" LIQUIDTIGHT FLEX CONDUIT	4(4–W2)	HEATER CONTROLLER TO HTR4B	E–6, E–7, E–8
Q	1/2" LIQUIDTIGHT FLEX CONDUIT	6(4–W20, 2–W2)	JUNCTION BOX TO HEAT REJECTION FAN	E–6, E–7, E–8
R	1/2" LIQUIDTIGHT FLEX CONDUIT	6(4–W20, 2–W2)	JUNCTION BOX TO HEAT REJECTION FAN	E–6, E–7, E–8
S	1/2" LIQUIDTIGHT FLEX CONDUIT	6(4–W20, 2–W2)	JUNCTION BOX TO HEAT REJECTION FAN	E–6, E–7, E–8
T	1/2" LIQUIDTIGHT FLEX CONDUIT	4(4–W2)	HEATER CONTROLLER TO HTR4A	E–7
U	3/4" LIQUIDTIGHT FLEX CONDUIT	6(6–W4)	ISOLATION TRANSFORMER TO CONTROL ENCLOSURE	E–9, E–33, E–35
V	1/2" LIQUIDTIGHT FLEX CONDUIT	4(4–W20)	CONDENSER FANS STARTER CABINET TO CONDENSER FAN	E–6, E–8
W	1/2" LIQUIDTIGHT FLEX CONDUIT	4(4–W20)	CONDENSER FANS STARTER CABINET TO CONDENSER FAN	E–6, E–8
X	1/2" LIQUIDTIGHT FLEX CONDUIT	4(4–W20)	CONDENSER FANS STARTER CABINET TO CONDENSER FAN	E–6, E–8
Y	1/2" LIQUIDTIGHT FLEX CONDUIT	4(4–W20)	CONDENSER FANS STARTER CABINET TO CONDENSER FAN	E–6, E–8
Z	3/4" LIQUIDTIGHT FLEX CONDUIT	4(2–W2, 1–W12, 1–W14)	CONTROL CABINET TO BLOWER MOTOR STARTER	E–7, E–37, E–39, E–41
AA	1–1/2" LIQUIDTIGHT FLEX CONDUIT	13(13–W14)	CONTROL CABINET TO INST. DISTRUBUTION JB	E–40, E–41, E–51
AB	3/4" LIQUIDTIGHT FLEX CONDUIT	6(6–W13)	CONTROL CABINET TO INST. DISTRUBUTION JB	E–43, E–53
AC	1/2" LIQUIDTIGHT FLEX CONDUIT	6(3–W2, 3–W12)	CONTROL CABINET TO STARTER CABINET	E–7, E–37, E–39
AD	1/2" LIQUIDTIGHT FLEX CONDUIT	4(2–W12, 2–W14)	CONTROL CABINET TO HEATER CONTROLLER	E–7, E–39, E–45
AE	1/2" LIQUIDTIGHT FLEX CONDUIT	6(4–W2, 2–W4)	ISOLATION TRANSFORMER TO 120VAC DISTRIBUTION BOX (VALVES)	E–34
AF	1/2" LIQUIDTIGHT FLEX CONDUIT	4(2–W12, 2–W14)	VALVE FEEDBACK / CONTROL CABINET TO FV3A	E–46, E–47
AG	1/2" LIQUIDTIGHT FLEX CONDUIT	4(2–W12, 2–W14)	VALVE FEEDBACK / CONTROL CABINET TO FV2A	E–46, E–47
AH	1 ½" LIQUIDTIGHT FLEX CONDUIT	20(20,–W14)	CONTROL CABINET TO VALVE FEEDBACK/CONTRIL JB	E–40, E–41, E–44, E–45, E–46
AI	1 ½" LIQUIDTIGHT FLEX CONDUIT	20(20,–W12)	CONTROL CABINET TO VALVE FEEDBACK/CONTRIL JB	E–37, E–38, E–46
AJ	1/2" LIQUIDTIGHT FLEX CONDUIT	4(2–W12, 2–W14)	VALVE FEEDBACK / CONTROL CABINET TO FV1A	E–46, E–47
AK	1/2" LIQUIDTIGHT FLEX CONDUIT	4(2–W12, 2–W14)	VALVE FEEDBACK / CONTROL CABINET TO FV3B	E–46, E–49
AL	1/2" LIQUIDTIGHT FLEX CONDUIT	4(2–W12, 2–W14)	VALVE FEEDBACK / CONTROL CABINET TO FV2B	E–46, E–49
AM	1/2" LIQUIDTIGHT FLEX CONDUIT	4(2–W12, 2–W14)	VALVE FEEDBACK / CONTROL CABINET TO FV1B	E–46, E–49
AN	1/2" LIQUIDTIGHT FLEX CONDUIT	4(2–W12, 2–W14)	VALVE FEEDBACK / CONTROL CABINET TO FV7	E–46, E–48
AO	1/2" LIQUIDTIGHT FLEX CONDUIT	4(2–W12, 2–W14)	VALVE FEEDBACK / CONTROL CABINET TO FV10	E–46, E–50
AP	1/2" LIQUIDTIGHT FLEX CONDUIT	4(2–W12, 2–W14)	VALVE FEEDBACK / CONTROL CABINET TO FV5	E–46, E–48
AQ	1/2" LIQUIDTIGHT FLEX CONDUIT	4(2–W12, 2–W14)	VALVE FEEDBACK / CONTROL CABINET TO FV4	E–46, E–50
AR	1/2" LIQUIDTIGHT FLEX CONDUIT	3(3–W2)	CONTROL CABINET TO CP1	E–7, E–35, E–39
AS	1/2" LIQUIDTIGHT FLEX CONDUIT	3(3–W2)	CONTROL CABINET TO CP2	E–7, E–35, E–39
AT	1/2" LIQUIDTIGHT FLEX CONDUIT	3(3–W2)	CONTROL CABINET TO CP3	E–7, E–35, E–39
AU	1/2" LIQUIDTIGHT FLEX CONDUIT	3(3–W2)	120VAC DISTRIBUTION BOX (VALVES) TO CONVENIENCE OUTLET	E–34
AV	1/2" LIQUIDTIGHT FLEX CONDUIT	3(3–W2)	120VAC DISTRIBUTION BOX (VALVES) TO FV3A	E–34, E–47
AW	1/2" LIQUIDTIGHT FLEX CONDUIT	3(3–W2)	120VAC DISTRIBUTION BOX (VALVES) TO FV2A	E–34, E–47
AX	1/2" LIQUIDTIGHT FLEX CONDUIT	3(3–W2)	120VAC DISTRIBUTION BOX (VALVES) TO FV1A	E–34, E–47
AY	1/2" LIQUIDTIGHT FLEX CONDUIT	3(3–W2)	120VAC DISTRIBUTION BOX (VALVES) TO FV3B	E–34, E–49
AZ	1/2" LIQUIDTIGHT FLEX CONDUIT	3(3–W2)	120VAC DISTRIBUTION BOX (VALVES) TO FV2B	E–34, E–49
BA	1/2" LIQUIDTIGHT FLEX CONDUIT	3(3–W2)	120VAC DISTRIBUTION BOX (VALVES) TO FV1B	E–34, E–49
BB	1/2" LIQUIDTIGHT FLEX CONDUIT	3(3–W2)	120VAC DISTRIBUTION BOX (VALVES) TO FV7	E–34, E–48
BC	1/2" LIQUIDTIGHT FLEX CONDUIT	3(3–W2)	120VAC DISTRIBUTION BOX (VALVES) TO FV10	E–34, E–50
BD	1/2" LIQUIDTIGHT FLEX CONDUIT	3(3–W2)	120VAC DISTRIBUTION BOX (VALVES) TO FV5	E–34, E–48
BE	1/2" LIQUIDTIGHT FLEX CONDUIT	3(3–W2)	120VAC DISTRIBUTION BOX (VALVES) TO FV4	E–34, E–50
BF	1/2" LIQUIDTIGHT FLEX CONDUIT	1(1–W14)	INSTRUMENTATION DISTRIBUTION TO PTS3A	E–51
BG	1/2" LIQUIDTIGHT FLEX CONDUIT	1(1–W14)	INSTRUMENTATION DISTRIBUTION TO PTD3	E–51
BH	1/2" LIQUIDTIGHT FLEX CONDUIT	2(2–W13)	INSTRUMENTATION DISTRIBUTION TO TT3	E–53
BI	1/2" LIQUIDTIGHT FLEX CONDUIT	1(1–W14)	INSTRUMENTATION DISTRIBUTION TO PTS3B	E–51
BJ	1/2" LIQUIDTIGHT FLEX CONDUIT	1(1–W14)	INSTRUMENTATION DISTRIBUTION TO PTS2A	E–51
BK	1/2" LIQUIDTIGHT FLEX CONDUIT	1(1–W14)	INSTRUMENTATION DISTRIBUTION TO PTD2	E–51
BL	1/2" LIQUIDTIGHT FLEX CONDUIT	2(2–W13)	INSTRUMENTATION DISTRIBUTION TO TT2	E–53
BM	1/2" LIQUIDTIGHT FLEX CONDUIT	1(1–W14)	INSTRUMENTATION DISTRIBUTION TO PTS2B	E–51
BN	1/2" LIQUIDTIGHT FLEX CONDUIT	1(1–W14)	INSTRUMENTATION DISTRIBUTION TO PTD4	E–51
BO	1/2" LIQUIDTIGHT FLEX CONDUIT	1(1–W13)	INSTRUMENTATION DISTRIBUTION TO TT8	E–53
BP	1/2" LIQUIDTIGHT FLEX CONDUIT	1(1–W14)	INSTRUMENTATION DISTRIBUTION TO PTS1A	E–51
BQ	1/2" LIQUIDTIGHT FLEX CONDUIT	1(1–W14)	INSTRUMENTATION DISTRIBUTION TO PTD1	E–51
BR	1/2" LIQUIDTIGHT FLEX CONDUIT	2(2–W13)	INSTRUMENTATION DISTRIBUTION TO TT1	E–53
BS	1/2" LIQUIDTIGHT FLEX CONDUIT	1(1–W14)	INSTRUMENTATION DISTRIBUTION TO PTS1B	E–51
BT	1/2" LIQUIDTIGHT FLEX CONDUIT	2(2–W14)	INSTRUMENTATION DISTRIBUTION TO HT5 AND TT5	E–51
BU	1/2" LIQUIDTIGHT FLEX CONDUIT	1(1–W14)	INSTRUMENTATION DISTRIBUTION TO PTS7	E–51
BV	1/2" LIQUIDTIGHT FLEX CONDUIT	1(1–W13)	INSTRUMENTATION DISTRIBUTION TO TT10	E–53
BW	1/2" LIQUIDTIGHT FLEX CONDUIT	2(2–W13)	INSTRUMENTATION DISTRIBUTION TO TT4	E–53
BX	1/2" LIQUIDTIGHT FLEX CONDUIT	2(2–W2)	STARTER CABINET TO JUNCTION BOX	E–7, E–8
BY	3/4" LIQUIDTIGHT FLEX CONDUIT	6(6–W2)	CONTROL CABINET TO HEATER CONTROLLER	E–7, E–35
BZ	1/2" LIQUIDTIGHT FLEX CONDUIT	4(4–W2)	CONTROL CABINET TO COMPRESSOR CABINET	E–7, E–39
CA	1/2" LIQUIDTIGHT FLEX CONDUIT	1(1–W12)	CONTROL CABINET TO FS1 (A194876)	E–37
CB	1/2" LIQUIDTIGHT FLEX CONDUIT	1(1–W12)	CONTROL CABINET TO FS2 (A194877)	E–37
CC	1/2" LIQUIDTIGHT FLEX CONDUIT	4(4–W20)	STARTER CABINET TO JUNCTION BOX	E–6, E–7, E–8
CD	1/2" LIQUIDTIGHT FLEX CONDUIT	3(3–W2)	CONTROL CABINET TO 120VAC DISTRIBUTION BOX	E–34, E–39
CE	1/2" LIQUIDTIGHT FLEX CONDUIT	4(4–W2)	STARTER CABINET TO 120VAC DISTRIBUTION BOX	E–7, E–34

WIRE DESIGNATION

	WIRE NUMBER	WIRE TYPE
W1	100 – 199	16AWG STRANDED COPPER SINGLE CONDUCTOR WIRE, MIL–SPEC M16878
W2	200 – 299	14AWG STRANDED COPPER SINGLE CONDUCTOR WIRE, MIL–SPEC M5086.
W3	300 – 399	12AWG STRANDED COPPER SINGLE CONDUCTOR WIRE, MIL–SPEC M5086.
W4	400 – 499	10AWG STRANDED COPPER SINGLE CONDUCTOR WIRE, MIL–SPEC M5086.
	500 – 999	NOT USED
W10	1000 – 1999	16AWG SINGLE PAIR CABLE WITHOUT SHIELD OF TYPE BELDEN 9410 OR EQUAL.
W11	2000–2999	16AWG STRANDED COPPER SINGLE CONDUCTOR WIRE, MIL–SPEC M16878.
W12	3000 – 3999	16AWG SINGLE PAIR CABLE WITHOUT SHIELD OF TYPE BELDEN 9410 OR EQUAL.
W13	4000 – 4999	T–TYPE THERMOCOUPLE SHIELDED EXTENTION CABLE OF TYPE BELDEN 3113A OR EQUAL.
W14	5000 – 5999	18AWG SINGLE PAIR CABLE WITH SHIELD OF TYPE BELDEN 8760 OR EQUAL.
W20	7000–7099	12 AWG STRANDED COPPER, MIL–SPEC M5086.
W21	7100–7199	10 AWG STRANDED COPPER, MIL–SPEC M5086.
W22	7200–7299	8 AWG STRANDED COPPER, MIL–SPEC M5086.
W23	7300–7399	6 AWG STRANDED COPPER, MIL–SPEC M5086.
W24	7400–7499	4 AWG STRANDED COPPER, MIL–SPEC M5086.
W25	7500–7599	3 AWG STRANDED COPPER, MIL–SPEC M5086.
W26	7600–7699	2 AWG STRANDED COPPER, MIL–SPEC M5086.
W27	7700–7799	1 AWG STRANDED COPPER, MIL–SPEC M5086.
W28	7800–7899	1/0 AWG STRANDED COPPER, MIL–SPEC M5086.
W29	7900–7999	2/0 AWG STRANDED COPPER, MIL–SPEC M5086.
W30	8000–8099	3/0 AWG STRANDED COPPER, MIL–SPEC M5086.
W31	8100–8199	4/0 AWG STRANDED COPPER, MIL–SPEC M5086.
W32	8200–8299	250 KCMIL STRANDED COPPER, MIL–SPEC M5086.
W33	8300–8399	3/0 AWG STRANDED COPPER TYPE W

LEGEND:

X(Y–WZ)

X = TOTAL NUMBER OF CABLES IN CONDUIT

Y = TOTAL NUMBER OF SPECIFIED WIRE TYPES

Z = WIRE TYPE REFERENCE

SYM	ZONE	DESCRIPTION	DATE	APPROVAL
		REVISIONS		

SIGNATURES		DATE
DRAFTER	T. JOBE	05/06/11
CHECKER	J. WHITEFORD	05/06/11
ENGINEER	S. RITTER	05/06/11
	R. WITHERSPOON	05/06/11
	R. FRANCO	05/06/11
SUBMITTED	T.O. ADAMS	05/06/11
APPROVED	E.A. THAXTON	05/06/11

NATIONAL AERONAUTICS AND SPACE ADMINISTRATION
JOHN F. KENNEDY SPACE CENTER, NASA
KENNEDY SPACE CENTER, FLORIDA

ASSEMBLY DRAWINGS

MPPU REFURBISHMENT DESIGN
ENVIRONMENTAL CONTROL SYSTEM
WIRE & CONDUIT SCHEDULE

TITLE

SIZE F | DWG. NO. 584F0301001 | REV –

PROJ. NO. 95255 | SHEET | OF

E–2

P:\95255\DRAWINGS\ELECT\E–2.DWG 14–APR–2011 10:31 JOBETL

KSC FORM 1–11 (REV. 3/76) (C/G 3/93)

FOR ANY PURPOSE OTHER THAN IN CONNECTION WITH A DEFINITELY RELATED GOVERNMENT PROCUREMENT OPERATION, THE UNITED STATES GOVERNMENT THEREBY INCURS NO RESPONSIBILITY NOR ANY OBLIGATION WHATSOEVER; AND THE FACT THAT THE GOVERNMENT MAY HAVE FORMULATED, FURNISHED, OR IN ANY WAY SUPPLIED THE SAID DRAWINGS, SPECIFICATIONS OR ANY OTHER DATA IS NOT TO BE REGARDED BY IMPLICATION OR OTHERWISE IN ANY MANNER LICENSING THE HOLDER OR ANY OTHER PERSONS OR CORPORATION, OR CONVEYING ANY RIGHTS OR PERMISSION TO MANUFACTURE, USE, OR SELL ANY PATENTED INVENTION THAT IN ANY WAY BE RELATED THERETO.

EAR 99 – NO LICENSE REQUIRED

The information contained in this drawing is technically content, but not technical data as defined by the International Traffic in Arms (ITAR) or the Export Administration Regulations (EAR), and therefore is EAR 99 N.L.R. - no license required, suitable for public release. (General Prohibition Six (Embargo) applies to all items subject to the EAR, i.e. items on the CCL and within EAR 99 N.L.R.. You may not make an export or reexport contrary to the provisions of part 746 (Embargos and Other Special Controls) of the EAR and 22 CFR part 126.1 of the ITAR).

EDDR # 113043 : NASA KSC Export Control Office (321-867-6039)

EAR 99

SPECIFIC NOTES:

A. SEE DWG E-54 FOR COMMUNICATION NETWORK DETAILS.

SLOT	0	1	2	3	4	5	6	7	8	9	10	11	12	13	14	15	16
	1756-PA75	1756-EN2T	1756-L63	1756-CN2R	1756-CN2R	1756-IB16I	1756-IB16I	1756-OW16I	1756-IF16	1756-IF16	1756-IT6I2	1756-OF8H	1756-OF8H	1756-N2	1756-EN2T	1756-IF6I	1756-IF6I	1756-EN2T
	1756-A17 A13 POWER SUPPLY	ETHERNET BRIDGE 10/100	LOGIX 5563 PROCESSOR	CONTROLNET REDUNDANT BRIDGE	CONTROLNET REDUNDANT BRIDGE	12/24VDC SINK/SOURCE ISOLATED INPUT 16 PTS	12/24VDC SINK/SOURCE ISOLATED INPUT 16 PTS	5... 150 VDC 10...256 VAC 16 N.O. INDIVIDUALLY ISOLATED OUTPUTS	ANALOG INPUT CURRENT/VOLTAGE 16 PTS.	ANALOG INPUT CURRENT/VOLTAGE 16 PTS.	ENHANCED ISOLATED THERMOCOUPLE MV	ANALOG OUTPUT-CURRENT/VOLTAGE 8 PTS	ANALOG OUTPUT-CURRENT/VOLTAGE 8 PTS	BLANK SLOT FILLER	ETHERNET BRIDGE 10/100	6 INDIVIDUALLY ISOLATED INPUTS	6 INDIVIDUALLY ISOLATED INPUTS	ETHERNET BRIDGE 10/100

OPERATOR INTERFACE COMPUTER & DISPLAY

A. REMOTE I/O CONTROL NET NETWORK

A. KSC/KGCS COMMAND & CONTROL NETWORK

A. KSC/KGCS HEALTH MONITORING NETWORK

A.

DTP1

0	FV4-DI1 DUCT TEMP BYPASS VALVE FULL CLOSED IND.
1	FV4-DI2 DUCT TEMP BYPASS VALVE FULL OPEN IND.
2	FV5-DI1 BLOWER INLET VANE FULL FULL CLOSED IND.
3	FV5-DI2 BLOWER INLET VANE FULL OPEN IND.
4	FV7-DI1 PLENUM DUMP VALVE FULL CLOSED IND.
5	FV7-DI2 PLENUM DUMP VALVE FULL OPEN IND.
6	MS5-DI BLOWER MOTOR "ON" INDICATION
7	MS6-DI HEAT REJECTION FANS "ON" INDICATION
8	MS4A-DI DUCT HEATER #1 "ON" INDICATION
9	MS4B-DI DUCT HEATER #2 "ON" INDICATION
10	FV10-DI1 HEAT ABS FLOW VALVE FULL CLOSED IND
11	FV10-DI2 HEAT ABS FLOW VALVE FULL OPEN IND
12	FS1-DI1 CONDENSATE FLOW SWITCH 1
13	FS2-DI2 CONDENSATE FLOW SWITCH 2
14	SPARE
15	SPARE

DTP3

0	MS5-DO BLOWER MOTOR "ON" COMMAND
1	MS6-DO HEAT REJECTION FANS "ON" COMMAND
2	CH1-DO CHILLER "ON" COMMAND
3	MS4A-DO DUCT HEATER #1 "ENABLE" COMMAND
4	MS4B-DO DUCT HEATER #2 "ENABLE" COMMAND
5	CP1-DO PLENUM REHEAT PUMP "ON" COMMAND
6	CP2-DO PRECOOL/REHEAT CIRC. PUMP "ON" COMMAND
7	CP3-DO HEAT REJECTION CIRC. PUMP "ON" COMMAND
8	SCR4A-DO HEATER #1 "ON" COMMAND
9	SCR4B-DO HEATER #2 "ON" COMMAND
10	SPARE
11	SPARE
12	SPARE
13	SPARE
14	SPARE
15	SPARE

ATP4

0	TT3-AI OUTLET 3 DUCT TEMPERATURE (T T/C)
1	TT2-AI OUTLET 2 DUCT TEMPERATURE (T T/C)
2	TT1-AI OUTLET 1 DUCT TEMPERATURE (T T/C)
3	TT4-AI COLD COIL TEMPERATURE (T T/C)
4	TT8-AI HEATER LOOP TEMPERATURE (T T/C)
5	TT10-AI HEAT ABS. COIL OFF COIL TEMP. (T T/C)

ATP6

0	PCI-AO HEATER 1 POWER CONTROLLER % POWER
1	FV4-AO DUCT TEMP VALVE BYPASS COMMAND
2	FV5-AO BLOWER INLET VANE COMMAND
3	FV7-AO PLENUM DUMP VALVE FLOW COMMAND
4	FV10-AO HEAT ABS. TEMP VALVE COMMAND
5	PCI-AO HEATER 2 POWER CONTROLLER % POWER
6	SPARE
7	SPARE

ATP7

0	SPARE
1	SPARE
2	SPARE
3	SPARE
4	SPARE
5	SPARE

DTP2

0	FV3A-DI1 OUTLET 3 DUCT FLOW VALVE FULL CLOSED IND.
1	FV3A-DI2 OUTLET 3 DUCT FLOW VALVE FULL OPEN IND.
2	FV2A-DI1 OUTLET 2 DUCT FLOW VALVE FULL CLOSED IND.
3	FV2A-DI2 OUTLET 2 DUCT FLOW VALVE FULL OPEN IND.
4	FV1A-DI1 OUTLET 1 DUCT FLOW VALVE FULL CLOSED IND.
5	FV1A-DI2 OUTLET 1 DUCT FLOW VALVE FULL OPEN IND.
6	FV3B-DI1 OUTLET 3 DUCT TEMP VALVE FULL CLOSED IND.
7	FV3B-DI2 OUTLET 3 DUCT TEMP VALVE FULL OPEN IND.
8	FV2B-DI1 OUTLET 2 DUCT TEMP VALVE FULL CLOSED IND.
9	FV2B-DI2 OUTLET 2 DUCT TEMP VALVE FULL OPEN IND.
10	FV1B-DI1 OUTLET 1 DUCT TEMP VALVE FULL CLOSED IND.
11	FV1B-DI2 OUTLET 1 DUCT TEMP VALVE FULL OPEN IND.
12	ESPB-DI E-STOP PUSH BUTTON
13	SPARE
14	SPARE
15	SPARE

ATP1

0	PTD3-AI OUTLET 3 DUCT FLOW DELTA PRESSURE
1	PTD2-AI OUTLET 2 DUCT FLOW DELTA PRESSURE
2	PTD1-AI OUTLET 1 DUCT FLOW DELTA PRESSURE
3	PTD4-AI DUCT TEMP CONTROL PRESSURE
4	PTS7-AI PLENUM STATIC PRESSURE
5	DPS-AI DEWPOINT
6	TT5-AI AMBIENT TEMPERATURE
7	FV3A-AI OUTLET 3 DUCT FLOW VALVE POSITION
8	FV2A-AI OUTLET 2 DUCT FLOW VALVE POSITION
9	FV1A-AI OUTLET 1 DUCT FLOW VALVE POSITION
10	FV3B-A1 OUTLET 3 DUCT TEMP VALVE POSITION
11	FV2B-AI OUTLET 2 DUCT TEMP VALVE POSITION
12	FV1B-AI OUTLET 1 DUCT TIMP VALVE POSITION
13	FV4-AI DUCT TEMP BYPASS VALVE POSITION
14	FV5-AI INLET VANE POSITION
15	FV7-AI DUMP VALVE POSITION

ATP2

0	CS5-AI BLOWER MOTOR CURRENT
1	PTS3A-AI OUTLET 3 DUCT UPSTREAM TOTAL PRESSURE
2	PTS2A-AI OUTLET 2 DUCT UPSTREAM TOTAL PRESSURE
3	PTS1A-AI OUTLET 1 DUCT UPSTREAM TOTAL PRESSURE
4	PTS3B-AI OUTLET 3 DUCT DISCHARGE TOTAL PRESSURE
5	PTS2B-AI OUTLET 2 DUCT DISCHARGE TOTAL PRESSURE
6	PTS1B-AI OUTLET 1 DUCT DISCHARGE TOTAL PRESSURE
7	FV10-AI HEAT ABS. COIL FLOW VALVE POS.
8	SPARE
9	SPARE
10	SPARE
11	SPARE
12	SPARE
13	SPARE
14	SPARE
15	SPARE

ATP5

0	FV3A-AO OUTLET 3 DUCT FLOW VALVE COMMAND
1	FV2A-AO OUTLET 2 DUCT FLOW VALVE COMMAND
2	FV1A-AO OUTLET 1 DUCT FLOW VALVE COMMAND
3	FV3B-AO OUTLET 3 DUCT TEMP VALVE COMMAND
4	FV2B-AO OUTLET 2 DUCT TEMP VALVE COMMAND
5	FV1B-AO OUTLET 1 DUCT TEMP VALVE COMMAND
6	SPARE
7	SPARE

ATP3

0	SPARE
1	SPARE
2	SPARE
3	SPARE
4	SPARE
5	SPARE

SYM	ZONE	DESCRIPTION	DATE	APPROVAL

REVISIONS

SIGNATURES		DATE
DRAFTER	T. JOBE	05/06/11
CHECKER	J. WHITEFORD	05/06/11
ENGINEER	S. RITTER	05/06/11
	R. WITHERSPOON	05/06/11
	R. FRANCO	05/06/11
SUBMITTED	T.O. ADAMS	05/06/11
APPROVED	E.A. THAXTON	05/06/11

NATIONAL AERONAUTICS AND SPACE ADMINISTRATION
JOHN F. KENNEDY SPACE CENTER, NASA
KENNEDY SPACE CENTER, FLORIDA

ASSEMBLY DRAWINGS

MPPU REFURBISHMENT DESIGN ENVIRONMENTAL CONTROL SYSTEM PLC BLOCK DIAGRAM

TITLE

SIZE F | DWG. NO. 584F0301001 | REV –

PROJ. NO. 95255 | SHEET | OF

E-5

KSC FORM 1-11 (REV. 3/76) (C/G 3/93)

EAR 99

FOR ANY PURPOSE OTHER THAN IN CONNECTION WITH A DEFINITELY RELATED GOVERNMENT PROCUREMENT OPERATION, THE UNITED STATES GOVERNMENT THEREBY INCURS NO RESPONSIBILITY NOR ANY OBLIGATION WHATSOEVER; AND THE FACT THAT THE GOVERNMENT MAY HAVE FORMULATED, FURNISHED, OR IN ANY WAY SUPPLIED THE SAID DRAWINGS, SPECIFICATIONS OR ANY OTHER DATA IS NOT TO BE REGARDED BY IMPLICATION OR OTHERWISE IN ANY MANNER LICENSING THE HOLDER OR ANY OTHER PERSONS OR CORPORATION, OR CONVEYING ANY RIGHTS OR PERMISSION TO MANUFACTURE, USE, OR SELL ANY PATENTED INVENTION THAT IN ANY WAY BE RELATED THERETO.

EAR 99 – NO LICENSE REQUIRED

The Information contained in this document is technical in content, but not technical data as defined by the International Traffic in Arms (ITAR) or the Export Administration Regulations (EAR), and therefore is EAR 99 NLR, no license required, suitable for public release. (General Prohibition Six (Embargo) applies to all items subject to the EAR, i.e. items on the CCL and within EAR 99 NLR. You may not make an export or reexport contrary to the provisions of part 746 (Embargos and Other Special Controls) of the EAR and 22 CFR part 126.1 of the ITAR).

EDDR # 113043 : NASA KSC Export Control Office (321- 867-9209)

SPECIFIC NOTES:

A. SEE DRAWING E-33 FOR CONTINUATION OF CIRCUIT.

B. SEE DRAWING E-34 FOR CONTINUATION OF CIRCUIT.

C. SEE DRAWING E-35 FOR CONTINUATION OF CIRCUIT.

D. PROVIDE 25 FEET PER PHASE OF CONDUCTOR TYPE W. PROVIDE CROUSE-HINDS POSI-LOK PLUGS E0400-299, E0400-295 & E0400-292 ON THE LOAD SIDE OF THE CONDUCTORS.

E. PROVIDE 100% RATED MAIN CIRCUIT BREAKER.

F. OVERLOADS ARE INTEGRAL TO THE MOTOR.

G. RE-USE EXISTING POWER PANEL ENCLOSURE. ALL CIRCUIT BREAKERS SHALL BE NEW AND RATED FOR AT LEAST 40°C AMBIENT AND 65KA INTERRUPTING RATING.

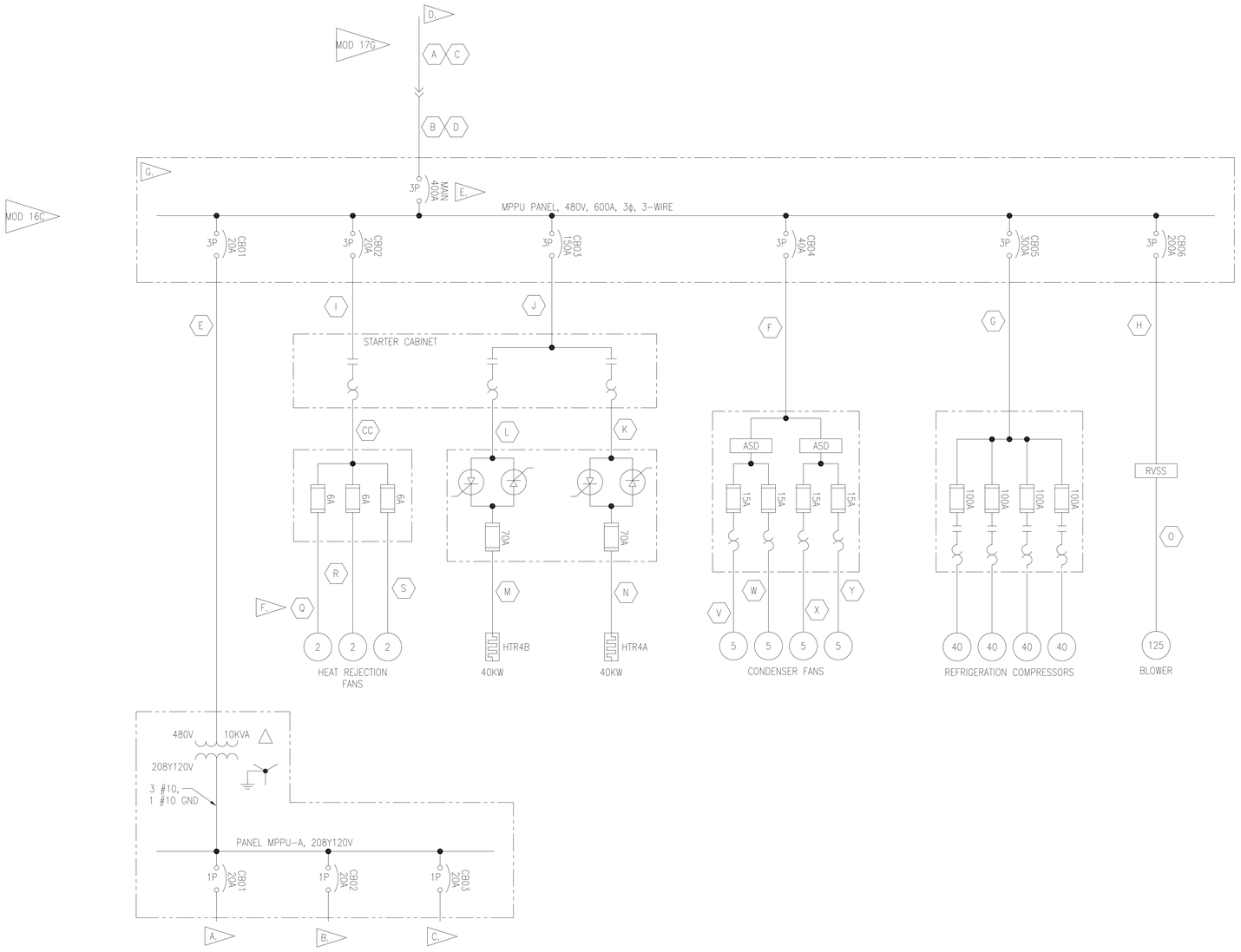

SYM	ZONE	DESCRIPTION	DATE	APPROVAL
		REVISIONS		

SIGNATURES		DATE
DRAFTER	M. HENNIGH	05/06/11
CHECKER	J. WHITEFORD	05/06/11
ENGINEER	B. GARLAND	05/06/11
	R. WITHERSPOON	05/06/11
	R. FRANCO	05/06/11
SUBMITTED	T.O. ADAMS	05/06/11
APPROVED	E.A. THAXTON	05/06/11

NATIONAL AERONAUTICS AND SPACE ADMINISTRATION
JOHN F. KENNEDY SPACE CENTER, NASA
KENNEDY SPACE CENTER, FLORIDA

ASSEMBLY DRAWINGS

MPPU REFURBISHMENT DESIGN ENVIRONMENTAL CONTROL SYSTEM SINGLE LINE DIAGRAM

TITLE

SIZE F | DWG. NO. 584F0301001 | REV –

PROJ. NO. 95255 | SHEET | OF

E-6

KSC FORM 1-11 (REV. 3/76) (C/G 3/93)

FOR ANY PURPOSE OTHER THAN IN CONNECTION WITH A DEFINITELY RELATED GOVERNMENT PROCUREMENT OPERATION, THE UNITED STATES GOVERNMENT THEREBY INCURS NO RESPONSIBILITY NOR ANY OBLIGATION WHATSOEVER, AND THE FACT THAT THE GOVERNMENT MAY HAVE FORMULATED, FURNISHED, OR IN ANY WAY SUPPLIED THE SAID DRAWINGS, SPECIFICATIONS OR ANY OTHER DATA IS NOT TO BE REGARDED BY IMPLICATION OR OTHERWISE IN ANY MANNER LICENSING THE HOLDER OR ANY OTHER PERSONS OR CORPORATION, OR CONVEYING ANY RIGHTS OR PERMISSION TO MANUFACTURE, USE, OR SELL ANY PATENTED INVENTION THAT IN ANY WAY BE RELATED THERETO.

EAR 99 - NO LICENSE REQUIRED

The information contained in the document is technical in content, but not technical data as defined by the International Traffic in Arms Regulations (ITAR) or the Export Administration Regulations (EAR), and therefore is EAR 99 NLR, no export license required, suitable for public release. (General Prohibition Six (Embargo) applies to all items subject to the EAR, i.e. items on the CCL and within EAR 99 NLR. You may not make an export or reexport contrary to the provisions of part 746 (Embargos and Other Special Controls) of the EAR and 22 CFR part 126.1 of the ITAR).

EDDR # 113043 : NASA KSC Export Control Office (321- 867-6208)

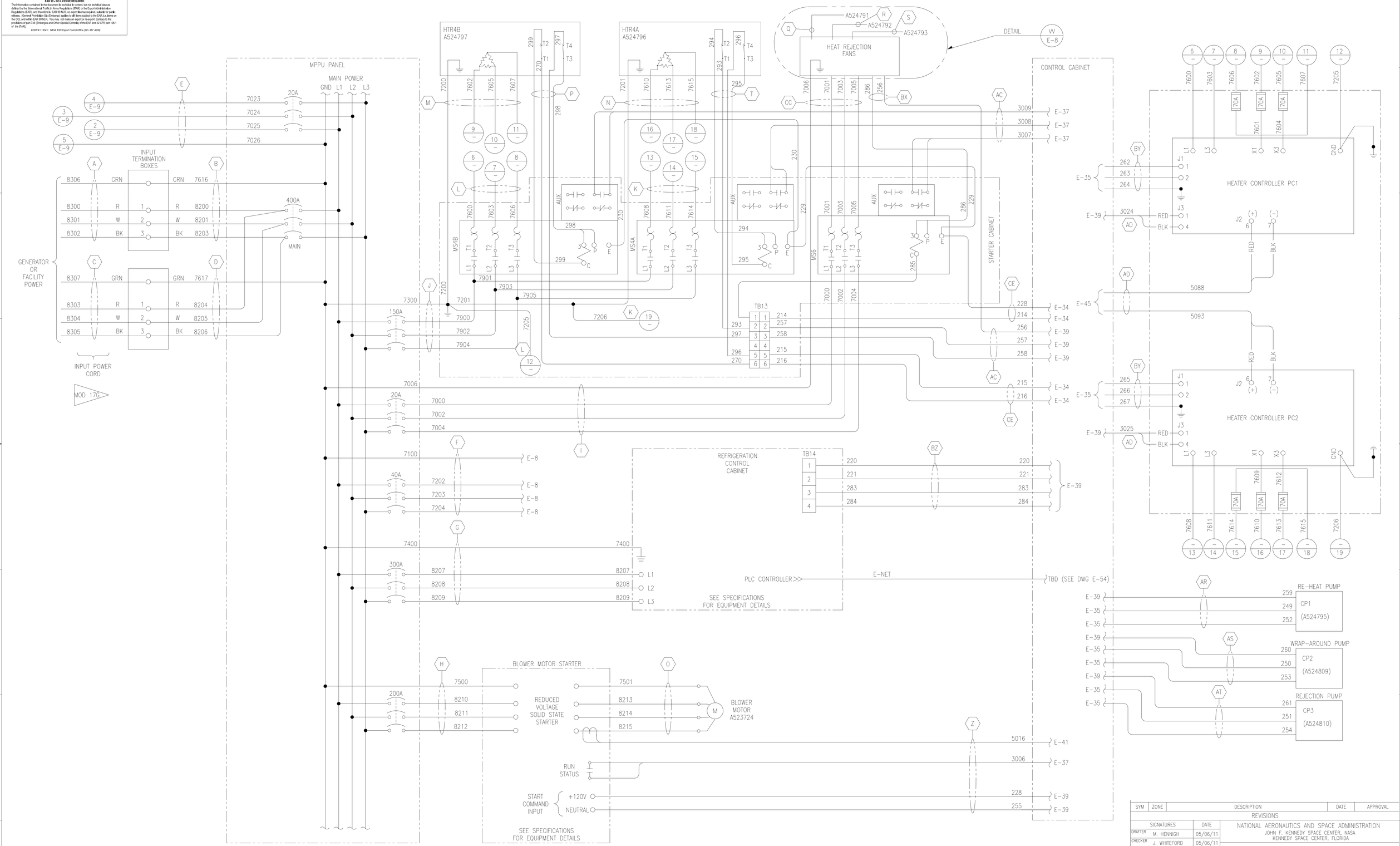

SYM	ZONE	DESCRIPTION	DATE	APPROVAL

REVISIONS

SIGNATURES		DATE
DRAFTER	M. HENNIGH	05/06/11
CHECKER	J. WHITEFORD	05/06/11
ENGINEER	B. GARLAND	05/06/11
	R. WITHERSPOON	05/06/11
	R. FRANCO	05/06/11
SUBMITTED	T.O. ADAMS	05/06/11
APPROVED	E.A. THAXTON	05/06/11

NATIONAL AERONAUTICS AND SPACE ADMINISTRATION
JOHN F. KENNEDY SPACE CENTER, NASA
KENNEDY SPACE CENTER, FLORIDA

ASSEMBLY DRAWINGS

MPPU REFURBISHMENT DESIGN
ENVIRONMENTAL CONTROL SYSTEM
480 VAC WIRING DIAGRAM

SIZE F | DWG. NO. 584F0301001 | REV –

PROJ. NO. 95255 | SHEET | OF

E-7

KSC FORM 1-11 (REV. 3/76) (C/G 3/93)

FOR ANY PURPOSE OTHER THAN IN CONNECTION WITH A DEFINITELY RELATED GOVERNMENT PROCUREMENT OPERATION, THE UNITED STATES GOVERNMENT THEREBY INCURS NO RESPONSIBILITY NOR ANY OBLIGATION WHATSOEVER; AND THE FACT THAT THE GOVERNMENT MAY HAVE FORMULATED, FURNISHED, OR IN ANY WAY SUPPLIED THE SAID DRAWINGS, SPECIFICATIONS OR ANY OTHER DATA IS NOT TO BE REGARDED BY IMPLICATION OR OTHERWISE IN ANY MANNER LICENSING THE HOLDER OR ANY OTHER PERSONS OR CORPORATION, OR CONVEYING ANY RIGHTS OR PERMISSION TO MANUFACTURE, USE, OR SELL ANY PATENTED INVENTION THAT IN ANY WAY BE RELATED THERETO.

EAR 99 – NO LICENSE REQUIRED

The Information contained in this document is technical in content, but not technical data as defined by the International Traffic in Arms (ITAR) or the Export Administration Regulations (EAR), and therefore is EAR 99 NLR, and no license required, suitable for public release. (General Prohibition Six (Embargo) applies to all items subject to the EAR, i.e. items on the CCL and within EAR 99 NLR. You may not make an export or reexport contrary to the provisions of part 746 (Embargos and Other Special Controls) of the EAR and 22 CFR part 126.1 of the ITAR).

EDDR # 113043 : NASA KSC Export Control Office (321- 867-9209)

EAR 99

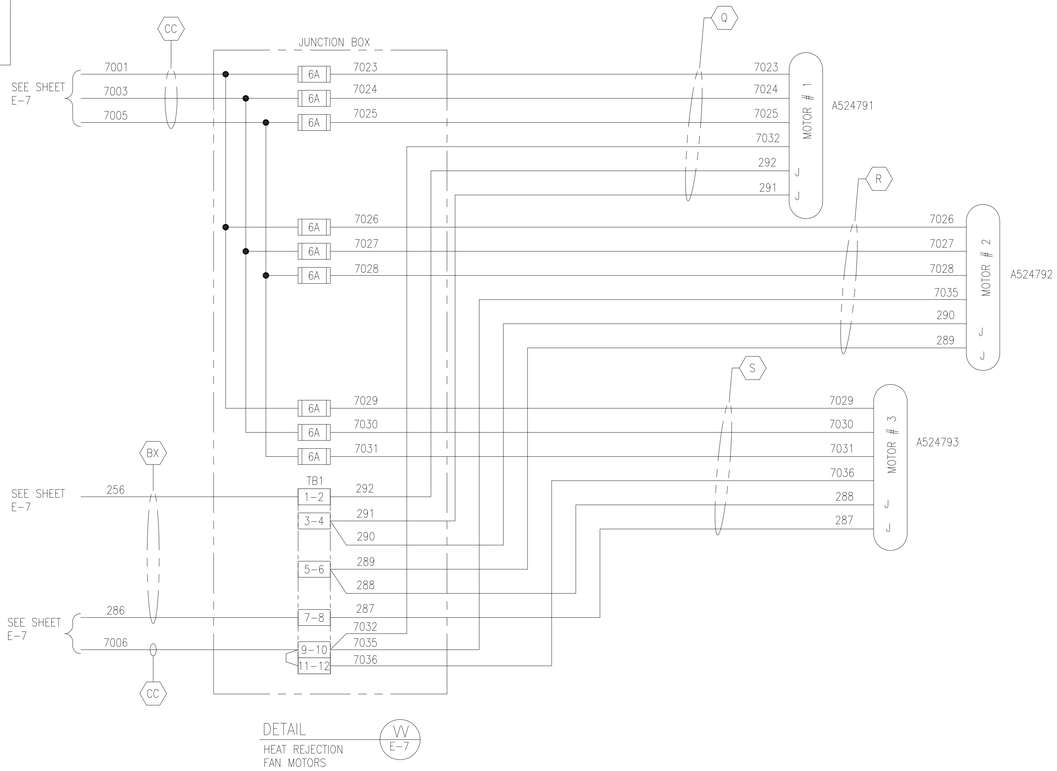

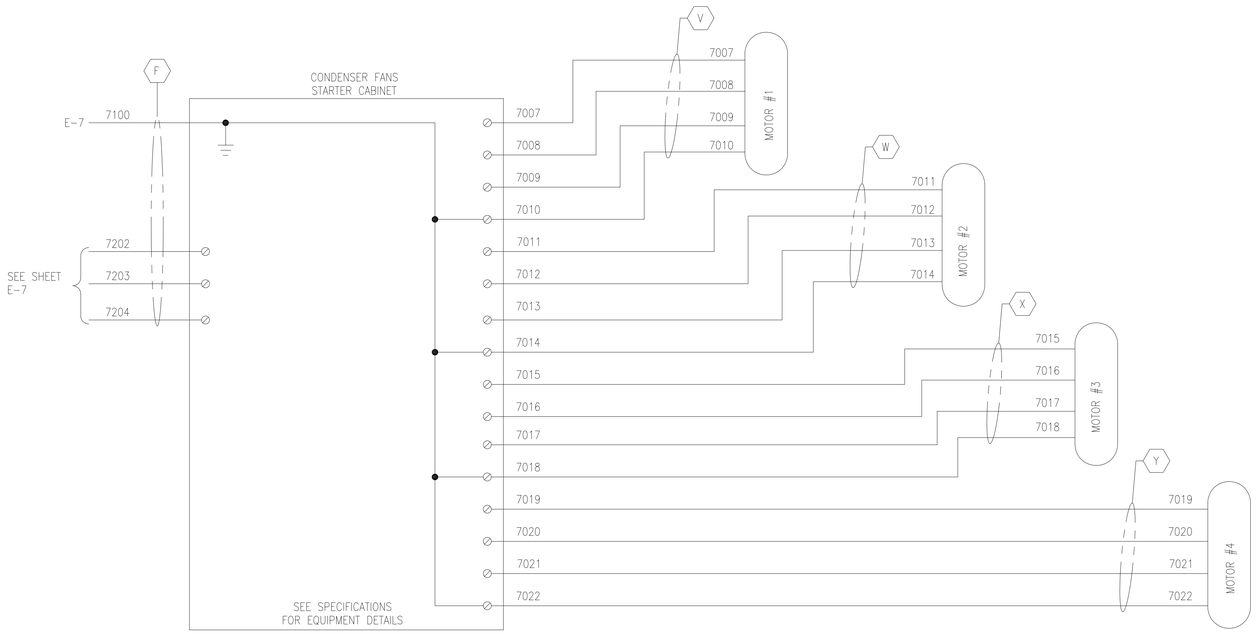

CONDENSER FAN MOTORS

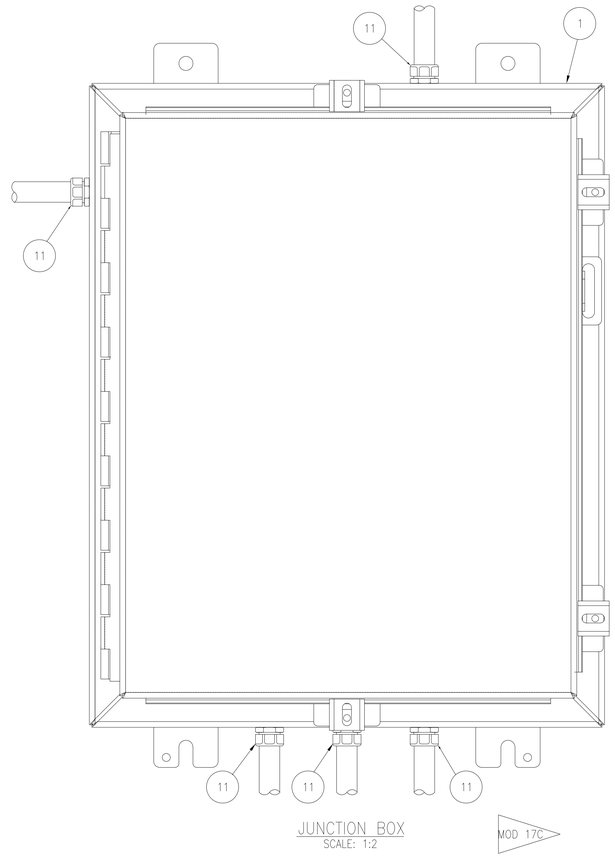

JUNCTION BOX
SCALE: 1:2

MOD 17C

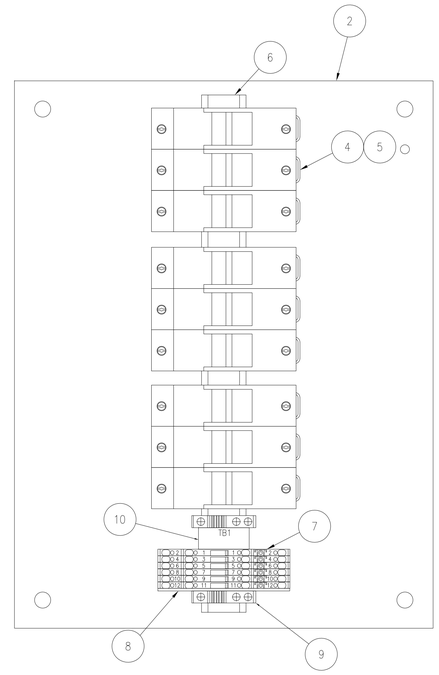

JUNCTION BOX PANEL
SCALE: 1:2

BILL OF MATERIALS

ITEM	QTY	DESCRIPTION	MANUFACTURER	PART NUMBER
1	1	STAINLESS STEEL TYPE 4X ENCLOSURE (20"x16"x8")	HOFFMAN	A20H1608SSLP
2	1	STEEL PANEL (17"x13")	HOFFMAN	A20P16
3	2	GROUND STRAPS	HOFFMAN	AGS816
4	3	CLASS J FUSE HOLDERS	MERSEN	US3JI3I
5	9	CLASS J FUSE	MERSEN	AJT6
6	A/R	35MM PERFORATED DINRAIL (NS35/7,5 - PERF75SMM)	PHOENIX CONTACT	1207640
7	6	DOUBLE LEVEL SPRING-CAGE KNIFE DISCONNECT TERMINAL BLOCK - ZFKK 2,5-MT	PHOENIX CONTACT	3025011
8	1	END COVER FOR ZFKK 2,5-MT	PHOENIX CONTACT	3024151
9	2	END STOP FOR TERMINAL BLOCKS (E/UK)	PHOENIX CONTACT	1201442
10	1	LABEL CARRIER (UBE/D)	PHOENIX CONTACT	0800307
11	5	1/2" CONDUIT FITTING INSULATED	LIQUIDTITE	93F7731

A.

SPECIFIC NOTES:

A. ITEM NOT SHOWN ON DRAWING.

B. FINAL CONDUIT PENETRATIONS SHALL BE DETERMINED BY CONTRACTOR.

SYM	ZONE	DESCRIPTION	DATE	APPROVAL
		REVISIONS		

SIGNATURES		DATE
DRAFTER	M. HENNIGH	05/06/11
CHECKER	J. WHITEFORD	05/06/11
ENGINEER	B. GARLAND	05/06/11
	R. WITHERSPOON	05/06/11
	R. FRANCO	05/06/11
SUBMITTED	T.O. ADAMS	05/06/11
APPROVED	E.A. THAXTON	05/06/11

NATIONAL AERONAUTICS AND SPACE ADMINISTRATION
JOHN F. KENNEDY SPACE CENTER, NASA
KENNEDY SPACE CENTER, FLORIDA

ASSEMBLY DRAWINGS

MPPU REFURBISHMENT DESIGN ENVIRONMENTAL CONTROL SYSTEM 480 VAC MOTOR WIRING DIAGRAM

SIZE F | DWG. NO. 584F0301001 | REV —

TITLE JOBCTL | PROJ. NO. 95255 | SHEET | OF

P:\95255\DRAWINGS\ELECT\E-8.DWG 23-MAR-2011 13:41

E-8

KSC FORM 1-11 (REV. 3/76) (C/G 3/93)

EAR 99

FOR ANY PURPOSE OTHER THAN IN CONNECTION WITH A DEFINITELY RELATED GOVERNMENT PROCUREMENT OPERATION, THE UNITED STATES GOVERNMENT THEREBY INCURS NO RESPONSIBILITY NOR ANY OBLIGATION WHATSOEVER; AND THE FACT THAT THE GOVERNMENT MAY HAVE FORMULATED, FURNISHED, OR IN ANY WAY SUPPLIED THE SAID DRAWINGS, SPECIFICATIONS OR ANY OTHER DATA IS NOT TO BE REGARDED BY IMPLICATION OR OTHERWISE IN ANY MANNER LICENSING THE HOLDER OR ANY OTHER PERSONS OR CORPORATION, OR CONVEYING ANY RIGHTS OR PERMISSION TO MANUFACTURE, USE, OR SELL ANY PATENTED INVENTION THAT IN ANY WAY BE RELATED THERETO.

EAR 99 – NO LICENSE REQUIRED

The information contained in this document is technical in content, but not technical data as defined by the International Traffic in Arms (ITAR) or the Export Administration Regulations (EAR), and therefore is EAR 99 NLR, no export license required, suitable for public release. (General Prohibition Six (Embargo) applies to all items subject to the EAR, i.e. items on the CCL and within EAR 99 NLR. You may not make an export or reexport contrary to the prohibitions of part 746 (Embargos and Other Special Controls) of the EAR and 22 CFR part 126.1 of the ITAR).

EDDR # 113043 : NASA KSC Export Control Office (321-867-6039)

SPECIFIC NOTES:

A. SEE E-22 FOR MPPU-A TRANSFORMER BOX LAYOUT.

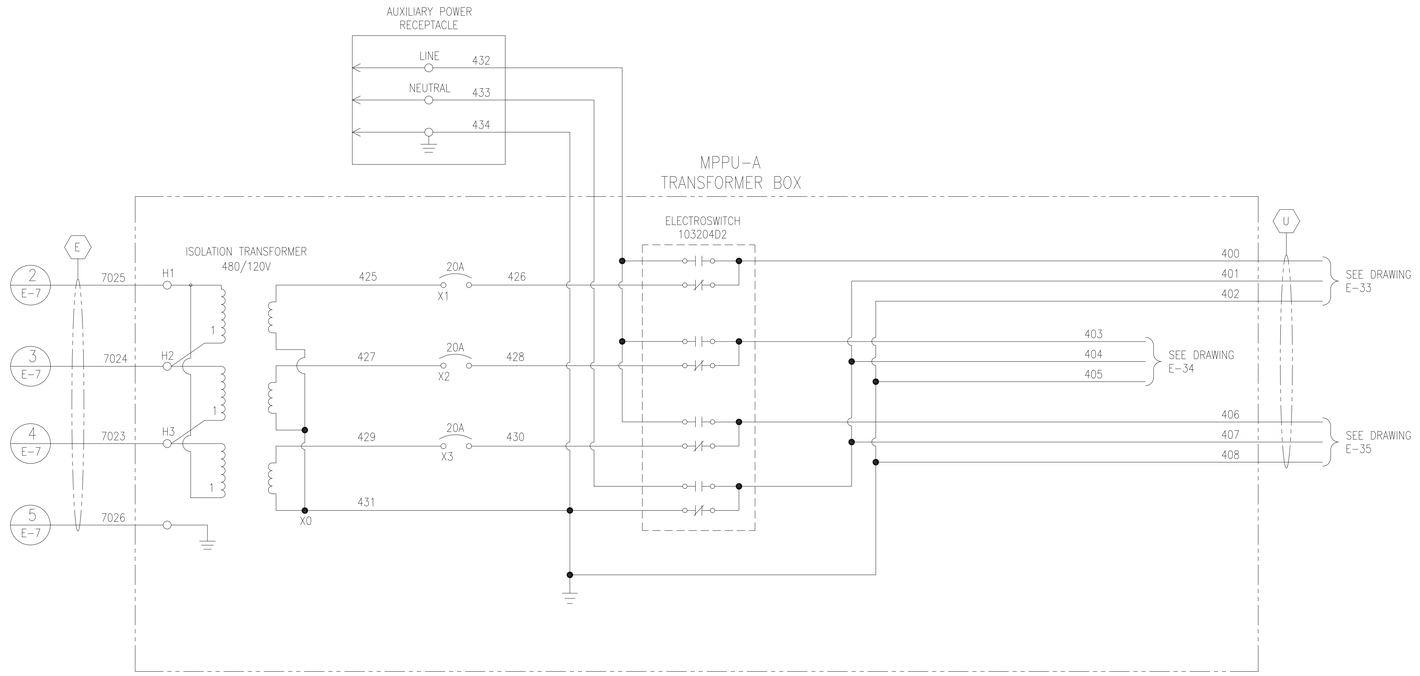

SYM	ZONE	DESCRIPTION	DATE	APPROVAL
		REVISIONS		

SIGNATURES		DATE
DRAFTER	T. JOBE	05/06/11
CHECKER	J. WHITEFORD	05/06/11
ENGINEER	B. GARLAND	05/06/11
	R. WITHERSPOON	05/06/11
	R. FRANCO	05/06/11
SUBMITTED	T.O. ADAMS	05/06/11
APPROVED	E.A. THAXTON	DATE 05/06/11
TITLE		

NATIONAL AERONAUTICS AND SPACE ADMINISTRATION
JOHN F. KENNEDY SPACE CENTER, NASA
KENNEDY SPACE CENTER, FLORIDA

ASSEMBLY DRAWINGS

MPPU REFURBISHMENT DESIGN ENVIRONMENTAL CONTROL SYSTEM 120 VAC WIRING DIAGRAM

SIZE	DWG. NO.	REV
F	584F0301001	–
PROJ. NO. 95255	SHEET	OF

E-9

FOR ANY PURPOSE OTHER THAN IN CONNECTION WITH A DEFINITELY RELATED GOVERNMENT PROCUREMENT OPERATION, THE UNITED STATES GOVERNMENT THEREBY INCURS NO RESPONSIBILITY NOR ANY OBLIGATION WHATSOEVER; AND THE FACT THAT THE GOVERNMENT MAY HAVE FORMULATED, FURNISHED, OR IN ANY WAY SUPPLIED THE SAID DRAWINGS, SPECIFICATIONS OR ANY OTHER DATA IS NOT TO BE REGARDED BY IMPLICATION OR OTHERWISE IN ANY MANNER LICENSING THE HOLDER OR ANY OTHER PERSONS OR CORPORATION, OR CONVEYING ANY RIGHTS OR PERMISSION TO MANUFACTURE, USE, OR SELL ANY PATENTED INVENTION THAT IN ANY WAY BE RELATED THERETO.

EAR 99 – NO LICENSE REQUIRED

The information contained in this document is technical in content, but not technical data as defined by the International Traffic in Arms (ITAR) or the Export Administration Regulations (EAR), and therefore is EAR 99 NLR, meaning no export required, suitable for public release. (General Prohibition Six (Embargo) applies to all items subject to the EAR, i.e. items on the CCL and within EAR 99 NLR. You may not make an export or reexport contrary to the provisions of part 746 (Embargos and Other Special Controls) of the EAR and 22 CFR part 126.1 of the ITAR).

EDDR # 113043 : NASA KSC Export Control Office (321- 867-9209)

EAR 99

SPECIFIC NOTES:

A. FOR ROUTING CABLE AND CONDUIT THROUGH FRAME, REFERENCE DETAIL AW ON SHEET S-5.

B HEATER CONTROLLER CABINET SHOWN OFFSET FOR CLARITY. ACTUAL LOCATION – MOUNTED TO BACK OF MAIN BREAKER BOX.

C. FINAL PLACEMENT OF CONTROL ENCLOSURE JUNCTION BOXES SHALL BE DETERMINED BY CONTRACTOR WITH APPROVAL BY NASA KSC.

D. FINAL CONDUIT PENETRATIONS SHALL BE DETERMINED BY CONTRACTOR.

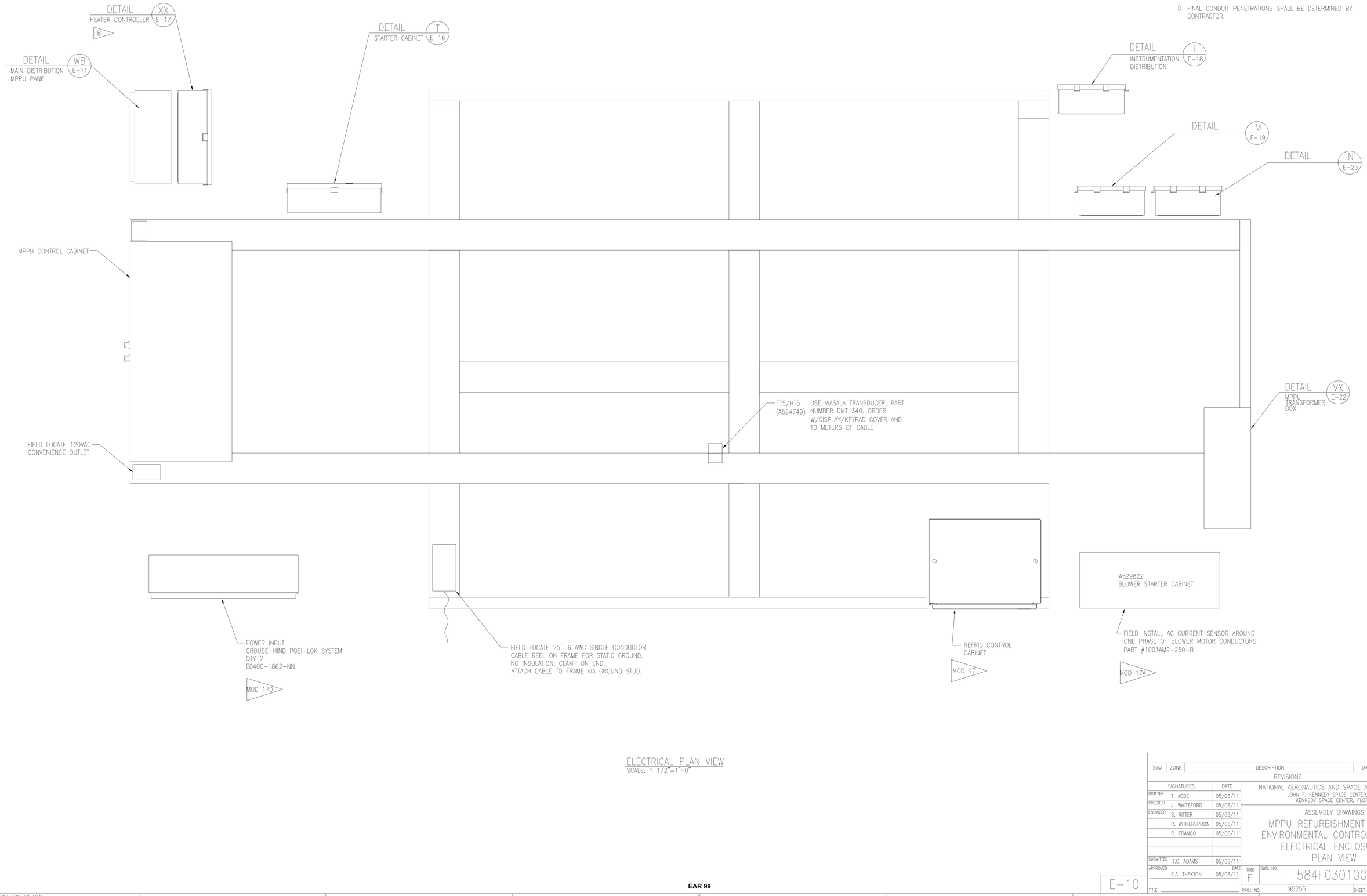

ELECTRICAL PLAN VIEW
SCALE: 1 1/2"=1'-0"

SYM	ZONE	DESCRIPTION	DATE	APPROVAL
		REVISIONS		

SIGNATURES		DATE
DRAFTER	T. JOBE	05/06/11
CHECKER	J. WHITEFORD	05/06/11
ENGINEER	S. RITTER	05/06/11
	R. WITHERSPOON	05/06/11
	R. FRANCO	05/06/11
SUBMITTED	T.O. ADAMS	05/06/11
APPROVED	E.A. THAXTON	DATE 05/06/11

NATIONAL AERONAUTICS AND SPACE ADMINISTRATION
JOHN F. KENNEDY SPACE CENTER, NASA
KENNEDY SPACE CENTER, FLORIDA

ASSEMBLY DRAWINGS

MPPU REFURBISHMENT DESIGN
ENVIRONMENTAL CONTROL SYSTEM
ELECTRICAL ENCLOSURES
PLAN VIEW

SIZE	DWG. NO.	REV
F	584F0301001	–
PROJ. NO. 95255	SHEET	OF

TITLE

E-10

KSC FORM 1-11 (REV. 3/76) (C/G 3/93)

EAR 99

FOR ANY PURPOSE OTHER THAN IN CONNECTION WITH A DEFINITELY RELATED GOVERNMENT PROCUREMENT OPERATION, THE UNITED STATES GOVERNMENT THEREBY INCURS NO RESPONSIBILITY NOR ANY OBLIGATION WHATSOEVER; AND THE FACT THAT THE GOVERNMENT MAY HAVE FORMULATED, FURNISHED, OR IN ANY WAY SUPPLIED THE SAID DRAWINGS, SPECIFICATIONS OR ANY OTHER DATA IS NOT TO BE REGARDED BY IMPLICATION OR OTHERWISE IN ANY MANNER LICENSING THE HOLDER OR ANY OTHER PERSONS OR CORPORATION, OR CONVEYING ANY RIGHTS OR PERMISSION TO MANUFACTURE, USE, OR SELL ANY PATENTED INVENTION THAT IN ANY WAY BE RELATED THERETO.

EAR 99 - NO LICENSE REQUIRED

The Information contained in this document is technical in content, but not technical data as defined by the International Traffic in Arms (ITAR) or the Export Administration Regulations (EAR), and therefore is EAR 99 NLR, meaning no license required, suitable for public release. (General Prohibition Six (Embargo) applies to all items subject to the EAR, i.e. items on the CCL and within EAR 99 NLR. You may not make an export or reexport contrary to the provisions of part 746 (Embargos and Other Special Controls) of the EAR and 22 CFR part 126.1 of the ITAR).

EDDR # 113043 : NASA KSC Export Control Office (321- 867-9209)

EAR 99

A APPLY WARNING LABEL TO ENCLOSURE COVER. LOCATE FOR EASE OF VIEWING.

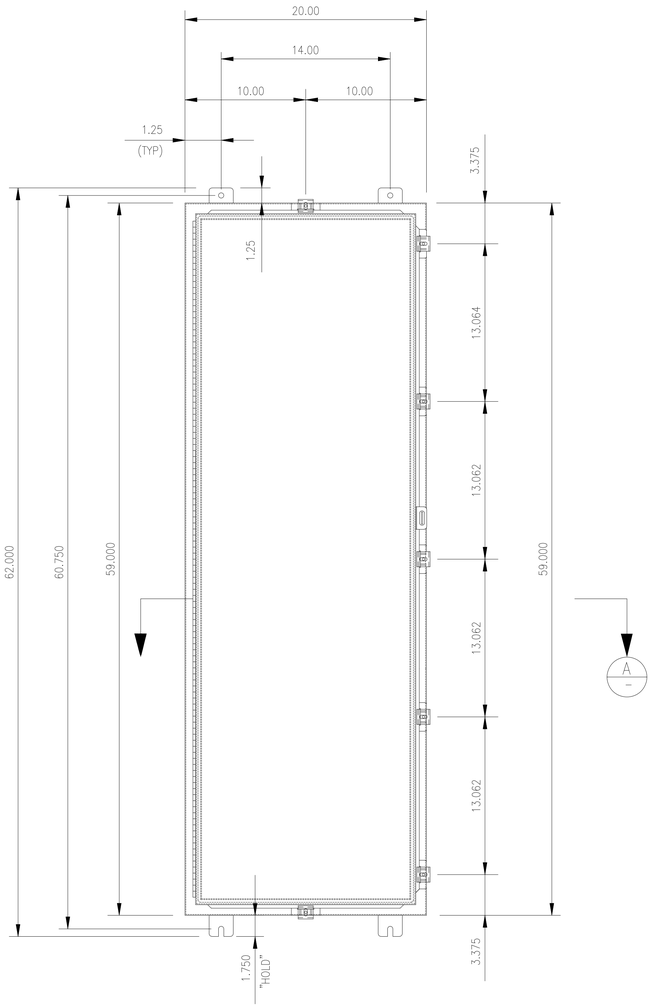

DETAIL MPPU PANEL (WB / E-10)
SCALE: NONE

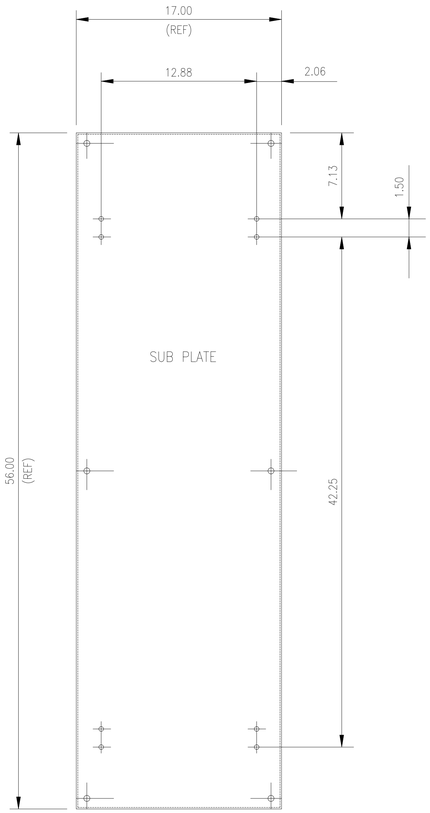

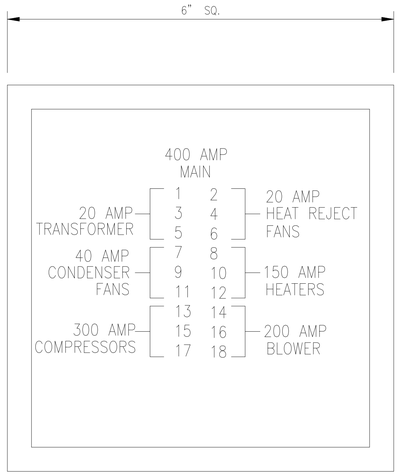

BREAKER IDENTIFICATION LABEL
SCALE: NONE
LOCATED INSIDE OF LOAD CENTER DOOR

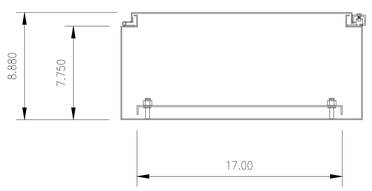

SECTION (A / –)
SCALE: NONE

A

WARNING

Arc Flash and Shock Hazard
Appropriate PPE Required

ARC FLASH PROTECTION		SHOCK PROTECTION	
Working Distance:	**18 inches**	Shock Hazard when Cover is removed:	**480 VAC**
Incident Energy:	**25 cal/cm^2**	Limited Approach:	**120 inches**
Flash Protection Boundary:	**48 inches**	Restricted Approach:	**12 inches**
PPE Category:	**Category 3**	Prohibited Approach:	**1 inches**
		Glove Class:	**00**

Bus: Panel MPPU ***Prot. Dev: Main CB***

Prepared Date: 04/19/2011 Task:

Warning: Changes in equipment settings or system configuration will invalidate the calculated values and PPE requirements

SYM	ZONE	DESCRIPTION	DATE	APPROVAL
		REVISIONS		

SIGNATURES		DATE
DRAFTER	T. JOBE	05/06/11
CHECKER	J. WHITEFORD	05/06/11
ENGINEER	B. GARLAND	05/06/11
	R. WITHERSPOON	05/06/11
	R. FRANCO	05/06/11
SUBMITTED	T.O. ADAMS	05/06/11
APPROVED	E.A. THAXTON	05/06/11

NATIONAL AERONAUTICS AND SPACE ADMINISTRATION
JOHN F. KENNEDY SPACE CENTER, NASA
KENNEDY SPACE CENTER, FLORIDA

ASSEMBLY DRAWINGS

MPPU REFURBISHMENT DESIGN
ENVIRONMENTAL CONTROL SYSTEM
ENCLOSURE LAYOUTS & DETAILS
PANEL MPPU

SIZE F | DWG. NO. 584F0301001 | REV —

PROJ. NO. 95255 | SHEET | OF

TITLE

E-11

P:\95255\DRAWINGS\ELECT\E-11.DWG 20-APR-2011 09:44 JOBETL

KSC FORM 1-11 (REV. 3/76) (C/G 3/93)

EAR 99

FOR ANY PURPOSE OTHER THAN IN CONNECTION WITH A DEFINITELY RELATED GOVERNMENT PROCUREMENT OPERATION, THE UNITED STATES GOVERNMENT THEREBY INCURS NO RESPONSIBILITY NOR ANY OBLIGATION WHATSOEVER; AND THE FACT THAT THE GOVERNMENT MAY HAVE FORMULATED, FURNISHED, OR IN ANY WAY SUPPLIED THE SAID DRAWINGS, SPECIFICATIONS OR ANY OTHER DATA IS NOT TO BE REGARDED BY IMPLICATION OR OTHERWISE IN ANY MANNER LICENSING THE HOLDER OR ANY OTHER PERSONS OR CORPORATION, OR CONVEYING ANY RIGHTS OR PERMISSION TO MANUFACTURE, USE, OR SELL ANY PATENTED INVENTION THAT IN ANY WAY BE RELATED THERETO.

EAR 99 – NO LICENSE REQUIRED

The Information contained in this document is technical in content, but not technical data as defined by the International Traffic in Arms (ITAR) or the Export Administration Regulations (EAR), and therefore is EAR 99 NLR, not subject to export control, suitable for public release. (General Prohibition Six (Embargo) applies to all items subject to the EAR, i.e. items on the CCL and within EAR 99 NLR. You may not make an export or reexport contrary to the provisions of part 746 (Embargos and Other Special Controls) of the EAR and 22 CFR part 126.1 of the ITAR).

EDDR # 113043 : NASA KSC Export Control Office (321- 867-9209)

EAR 99

BILL OF MATERIALS

ITEM	QTY	DESCRIPTION	MANUFACTURER	PART NUMBER
1	1	NEMA 4X ENCLOSURE 20"x16"x8" SST	HOFFMAN	A20H1608SSLP
2	1	ENCLOSURE PANEL 17"x13" SST	HOFFMAN	A-20P16
3	A/R	CONDUIT FITTING INSULATED (SIZE AS REQUIRED)	LIQUIDTITE	T&B LT SERIES
4	2	NEMA 3 STARTER	EATON	W201K3CF
5	3	TYPE W AUXILLARY CONTACT MODULE	EATON	W22
6	3	INTERNAL TRIP INDICATOR	EATON	WLED
7	1	NEMA 1 STARTER	EATON	W201K1CF
8	2	END STOP FOR TERMINAL BLOCKS (E/UK)	PHOENIX CONTACT	1201442
9	1	LABEL CARRIER (UBE/D)	PHOENIX CONTACT	0800307
10	6	110VAC TERMINAL BLOCK (UT-4)	PHOENIX CONTACT	3044102
11	1	PARTITION PLATE FOR TERMINAL BLOCK (UT-4)	PHOENIX CONTACT	3047167
12	A/R	35mm PERFORATED DINRAIL (NS35/7,5)	PHOENIX CONTACT	1207640

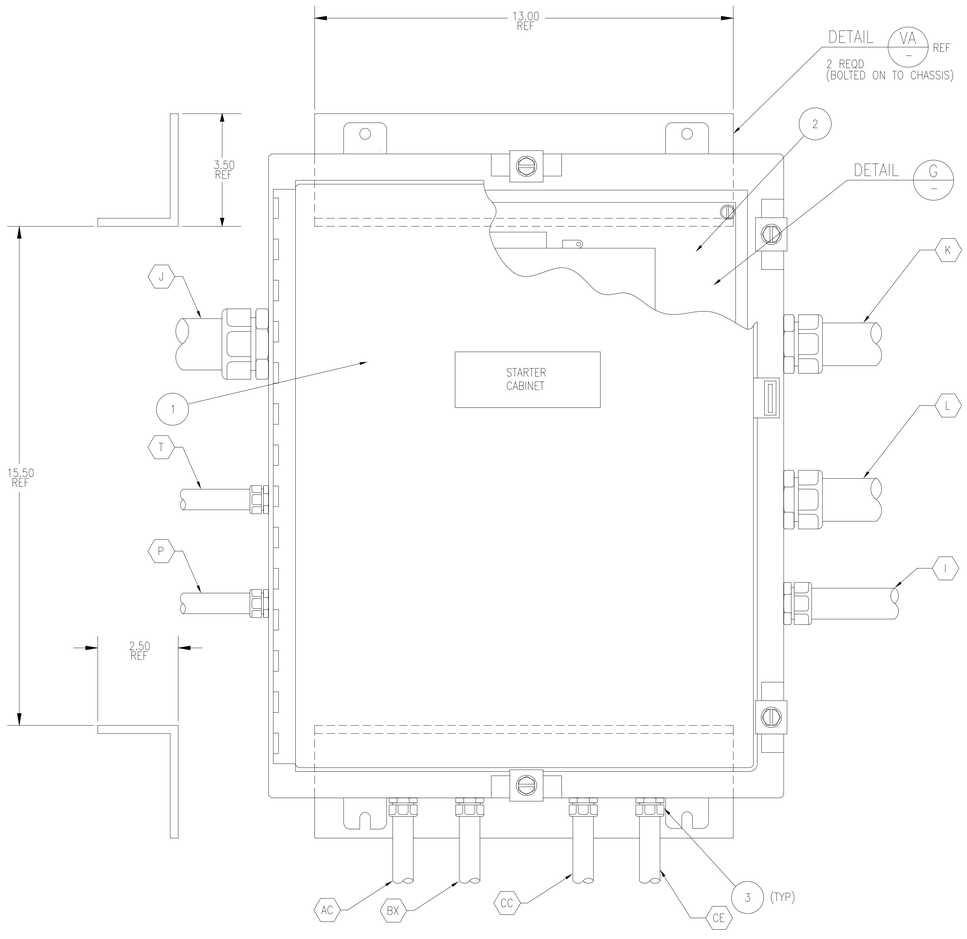

DETAIL T
SCALE: 1:2
MOD 16B

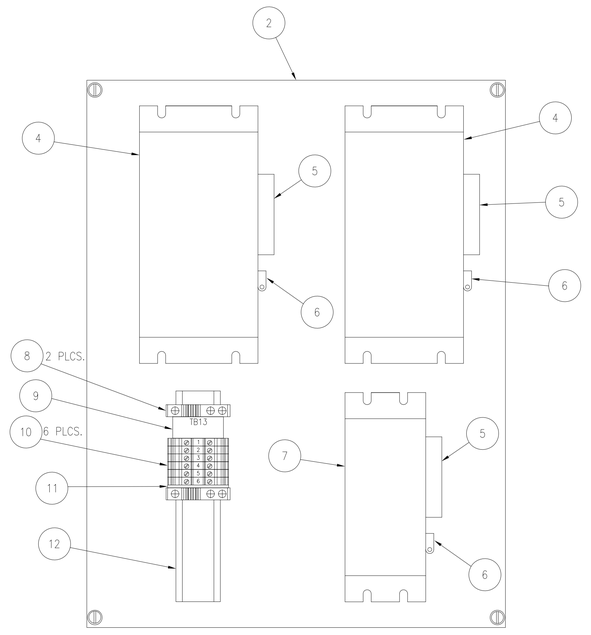

DETAIL G
SCALE: 1:2

SPECIFIC NOTES:

A. LOCATE & MOUNT STARTERS TO ENCLOSURE PANEL USING THE FOLLOWING HARDWARE:

NEMA 1
- #10-32 x 5/8" LONG PAN HEAD SCREW, SST
- #10-32 AVK THREADED INSERT
- #10 FLAT WASHER, SST
- #10 LOCK WASHER, SST

NEMA 3
- 1/4-20 x 5/8" LONG PAN HEAD SCREW, SST
- 1/4-20 AVK THREADED INSERT
- 1/4 FLAT WASHER, SST
- 1/4 LOCK WASHER, SST

B. FINAL CONDUIT PENETRATIONS SHALL BE DETERMINED BY CONTRACTOR.

SYM	ZONE	DESCRIPTION	DATE	APPROVAL
		REVISIONS		

SIGNATURES		DATE
DRAFTER	T. JOBE	05/06/11
CHECKER	J. WHITEFORD	05/06/11
ENGINEER	B. GARLAND	05/06/11
	R. WITHERSPOON	05/06/11
	R. FRANCO	05/06/11
SUBMITTED	T.O. ADAMS	05/06/11
APPROVED	E.A. THAXTON	DATE 05/06/11

TITLE

NATIONAL AERONAUTICS AND SPACE ADMINISTRATION
JOHN F. KENNEDY SPACE CENTER, NASA
KENNEDY SPACE CENTER, FLORIDA

ASSEMBLY DRAWINGS

MPPU REFURBISHMENT DESIGN
ENVIRONMENTAL CONTROL SYSTEM
ENCLOSURE LAYOUTS & DETAILS
STARTER CABINET

SIZE F | DWG. NO. 584F0301001 | REV —

PROJ. NO. 95255 | SHEET OF

E-16

P:\95255\DRAWINGS\ELECT\E-16.DWG 02-MAR-2011 11:30 JOBETL

KSC FORM 1-11 (REV. 3/76) (C/G 3/93)

EAR 99

FOR ANY PURPOSE OTHER THAN IN CONNECTION WITH A DEFINITELY RELATED GOVERNMENT PROCUREMENT OPERATION, THE UNITED STATES GOVERNMENT THEREBY INCURS NO RESPONSIBILITY NOR ANY OBLIGATION WHATSOEVER; AND THE FACT THAT THE GOVERNMENT MAY HAVE FORMULATED, FURNISHED, OR IN ANY WAY SUPPLIED THE SAD DRAWINGS, SPECIFICATIONS OR ANY OTHER DATA IS NOT TO BE REGARDED BY IMPLICATION OR OTHERWISE IN ANY MANNER LICENSING THE HOLDER OR ANY OTHER PERSONS OR CORPORATION, OR CONVEYING ANY RIGHTS OR PERMISSION TO MANUFACTURE, USE, OR SELL ANY PATENTED INVENTION THAT IN ANY WAY BE RELATED THERETO.

EAR 99 – NO LICENSE REQUIRED

The information contained in this document is technical in content, but not technical data as defined by the International Traffic in Arms (ITAR) or the Export Administration Regulations (EAR), and therefore is EAR 99 NLR, and may be exported, subject to public release. (General Prohibition Six (Embargo) applies to all items subject to the EAR, i.e. items on the CCL and within EAR 99 NLR. You may not make an export or reexport contrary to the provisions of part 746 (Embargos and Other Special Controls) of the EAR and 22 CFR part 126.1 of the ITAR).

EDDR # 113043 : NASA KSC Export Control Office (321- 867-9209)

BILL OF MATERIALS

ITEM	QTY	DESCRIPTION	MANUFACTURER	PART NUMBER
1	1	NEMA 4X ENCLOSURE 30"x24"x12"	HOFFMAN	A30H2412SSLP
2	1	ENCLOSURE PANEL 27"x21"	HOFFMAN	A30P24
3	A/R	CONDUIT FITTING INSULATED (SIZE AS REQUIRED)	LIQUIDTITE	T&B LT SERIES
4	A/R	35MM PERFORATED DINRAIL (NS35/7,5 - PERF755MM)	PHOENIX CONTACT	1207640
5	2	MINI-MAX 2 POWER CONTROLLER	CHROMALOX	Mmax2-303110
6	2	FUSE BLOCK	FERRAZ SHAWMUT	61038J
7	6	70 AMP FUSES	FERRAZ SHAWMUT	AJT70

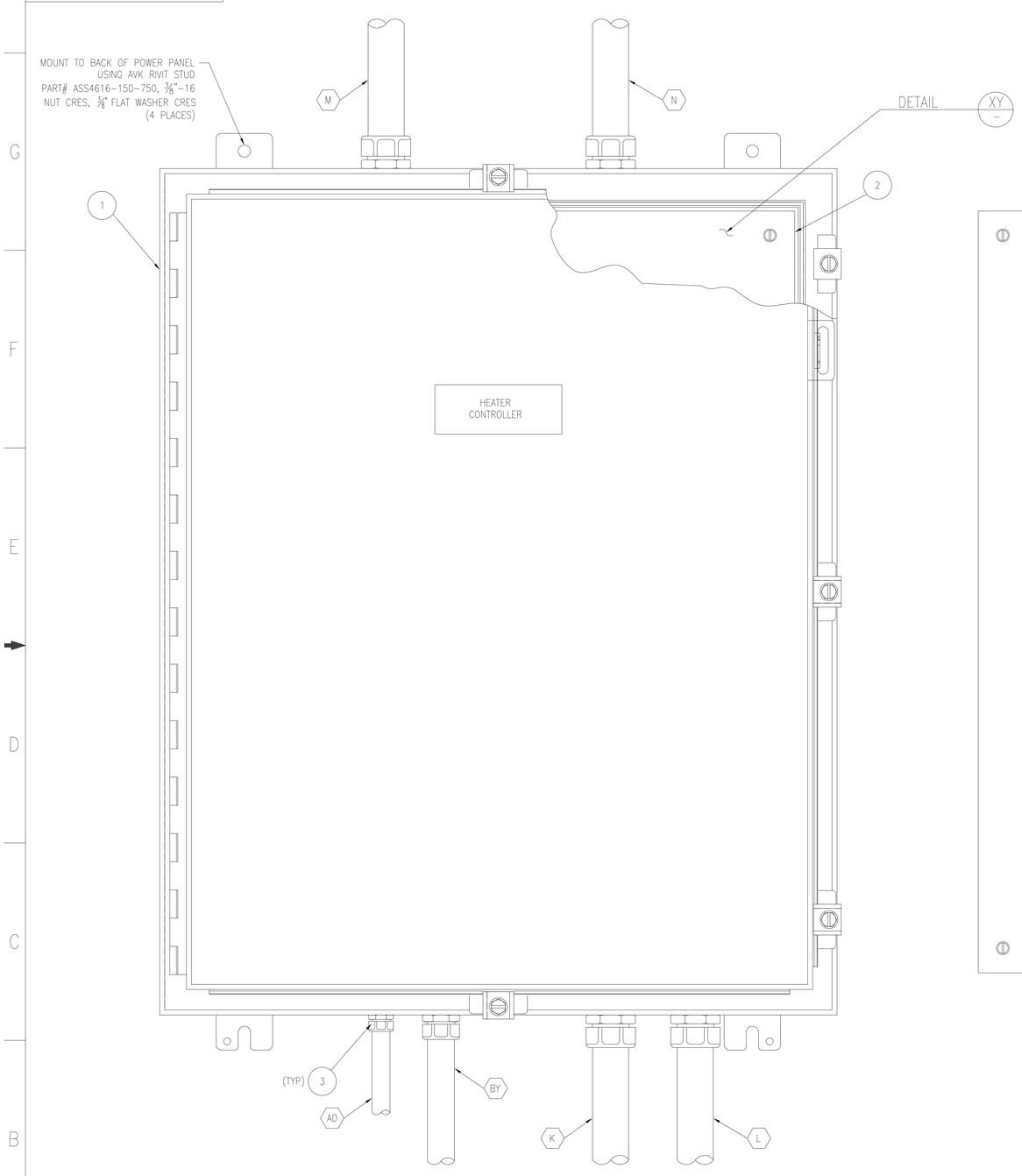

DETAIL XX
SCALE: 1:2
E-10

MOD 19B

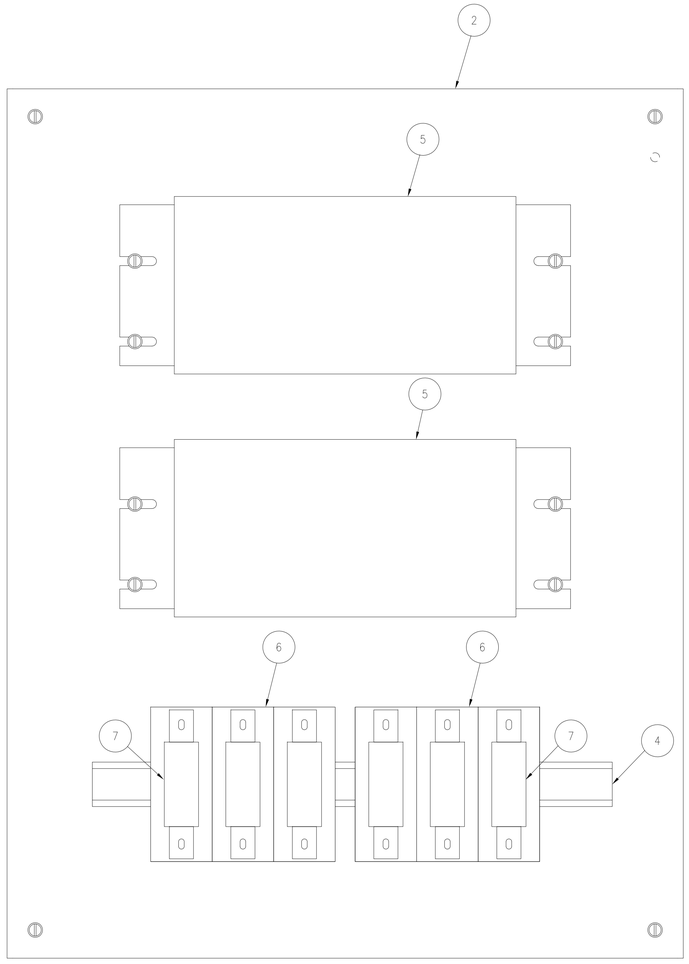

DETAIL XY
SCALE: 1:2
–

SPECIFIC NOTES:

A. FIELD LOCATE & MOUNT POWER CONTROLLER TO ENCLOSURE PANEL APPROX. WHERE SHOWN USING THE FOLLOWING HARDWARE:
#10-32 x 3/8" LONG PAN HEAD SCREW, SST
#10-32 AVK THREADED INSERT
#10 FLAT WASHER, SST
#10 LOCK WASHER, SST

B. WHEN DRILLING POWER PANEL BACK FOR RIVIT STUDS, TAKE CARE TO PREVENT DAMAGE TO INTERIOR WIRING AND COMPONENTS. VERIFY NO DRILL SHAVINGS ARE LEFT IN POWER CABINET.

C. FINAL CONDUIT PENETRATIONS SHALL BE DETERMINED BY CONTRACTOR.

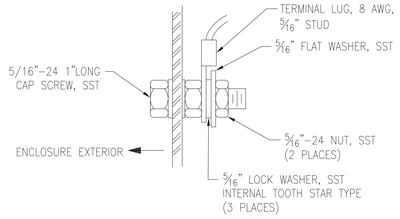

GROUNDING DETAIL
SCALE: FULL

SYM	ZONE	DESCRIPTION	DATE	APPROVAL
		REVISIONS		

SIGNATURES		DATE
DRAFTER	T. JOBE	05/06/11
CHECKER	J. WHITEFORD	05/06/11
ENGINEER	B. GARLAND	05/06/11
	R. WITHERSPOON	05/06/11
	R. FRANCO	05/06/11
SUBMITTED	T.O. ADAMS	05/06/11
APPROVED	E.A. THAXTON	DATE 05/06/11

NATIONAL AERONAUTICS AND SPACE ADMINISTRATION
JOHN F. KENNEDY SPACE CENTER, NASA
KENNEDY SPACE CENTER, FLORIDA

ASSEMBLY DRAWINGS

MPPU REFURBISHMENT DESIGN
ENVIRONMENTAL CONTROL SYSTEM
ENCLOSURE LAYOUTS & DETAILS
HEATER CONTROLLER

TITLE

SIZE F | DWG. NO. 584F0301001 | REV –

PROJ. NO. 95255 | SHEET | OF

E-17

FOR ANY PURPOSE OTHER THAN IN CONNECTION WITH A DEFINITELY RELATED GOVERNMENT PROCUREMENT OPERATION, THE UNITED STATES GOVERNMENT THEREBY INCURS NO RESPONSIBILITY NOR ANY OBLIGATION WHATSOEVER; AND THE FACT THAT THE GOVERNMENT MAY HAVE FORMULATED, FURNISHED, OR IN ANY WAY SUPPLIED THE SAID DRAWINGS, SPECIFICATIONS OR ANY OTHER DATA IS NOT TO BE REGARDED BY IMPLICATION OR OTHERWISE IN ANY MANNER LICENSING THE HOLDER OR ANY OTHER PERSONS OR CORPORATION, OR CONVEYING ANY RIGHTS OR PERMISSION TO MANUFACTURE, USE, OR SELL ANY PATENTED INVENTION THAT IN ANY WAY BE RELATED THERETO.

EAR 99 – NO LICENSE REQUIRED

The Information contained in this document is technical in content, but not technical data as defined by the International Traffic in Arms (ITAR) or the Export Administration Regulations (EAR), and therefore is EAR 99 NLR, not subject to export, suitable for public release. (General Prohibition Six (Embargo) applies to all items subject to the EAR, i.e. items on the CCL and within EAR 99 NLR. You may not make an export or reexport contrary to the provisions of part 746 (Embargos and Other Special Controls) of the EAR and 22 CFR part 126.1 of the ITAR).

EDDR # 113043 : NASA KSC Export Control Office (321- 867-9209)

EAR 99

BILL OF MATERIALS

ITEM	QTY	DESCRIPTION	MANUFACTURER	PART NUMBER
1	1	NEMA 4X ENCLOSURE 16"x14"x6" SST	HOFFMAN	A16H1406SSLP
2	1	ENCLOSURE PANEL 14.75"x12.88" SST	HOFFMAN	A-16P14SS
3	A/R	CONDUIT FITTING INSULATED (SIZE AS REQUIRED)	LIQUIDTITE	T&B LT SERIES
4	72	TERMINAL BLOCK	PHOENIX CONTACT	3036343
5	4	END STOP FOR TERMINAL BLOCKS (E/UK)	PHOENIX CONTACT	1201442
6	6	MTKD DISCONNECT TERMINAL BLOCK	PHOENIX CONTACT	3100017
7	6	PARTITION PLATES FOR MTKD-CU/CUNI (ATS-MTK)	PHOENIX CONTACT	3101029
8	6	THERMOCOUPLE TERMINAL BLOCK PAIR TYPE T (MTKD-CU/CUNI)	PHOENIX CONTACT	3100059
9	A/R	WIRE DUCT (2" x 1") COVER PART# (C2WH6)	PANDUIT	G2X1WH6
10	4	LABEL CARRIER (UBE/D)	PHOENIX CONTACT	0800307
11	3	END COVER FOR D-ST 2.5	PHOENIX CONTACT	3030488
12	A/R	35mm PERFORATED DINRAIL (NS35/7,5)	PHOENIX CONTACT	1207640

SPECIFIC NOTES:

A. FINAL CONDUIT PENETRATIONS SHALL BE DETERMINED BY CONTRACTOR.
B. DIN RAIL MOUNTING DETAILS NOT SHOWN.

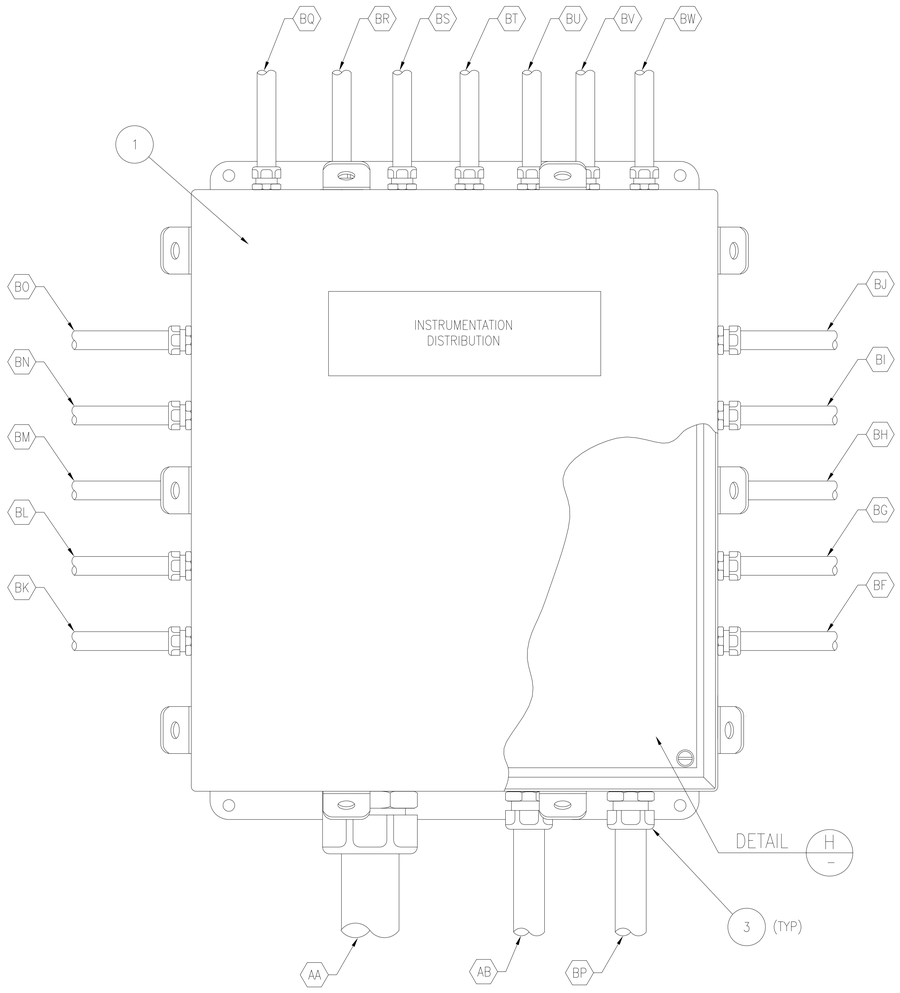

DETAIL L
SCALE: 1:2

MOD 16A

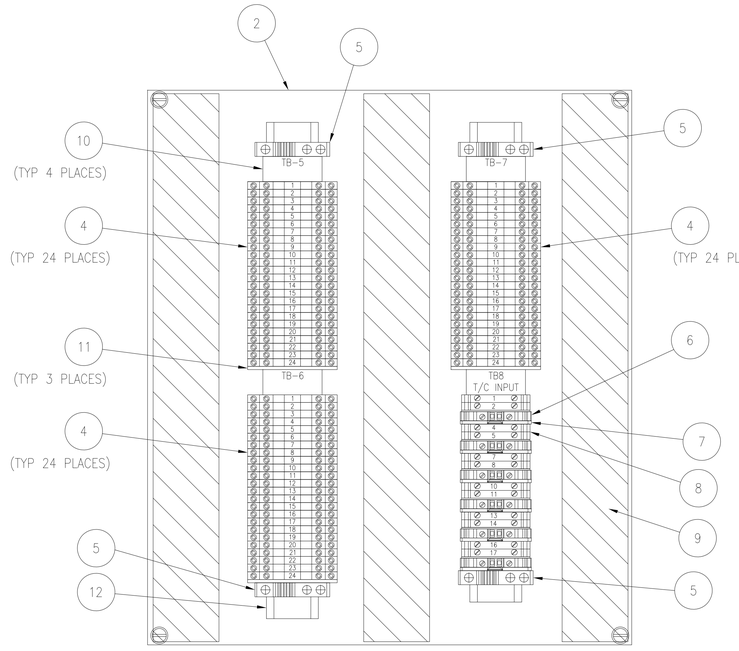

DETAIL H
SCALE: 1:2

SYM	ZONE	DESCRIPTION	DATE	APPROVAL
		REVISIONS		

SIGNATURES		DATE
DRAFTER	T. JOBE	05/06/11
CHECKER	J. WHITEFORD	05/06/11
ENGINEER	S. RITTER	05/06/11
	R. WITHERSPOON	05/06/11
	R. FRANCO	05/06/11
SUBMITTED	T.O. ADAMS	05/06/11
APPROVED	E.A. THAXTON	05/06/11

NATIONAL AERONAUTICS AND SPACE ADMINISTRATION
JOHN F. KENNEDY SPACE CENTER, NASA
KENNEDY SPACE CENTER, FLORIDA

ASSEMBLY DRAWINGS

MPPU REFURBISHMENT DESIGN
ENVIRONMENTAL CONTROL SYSTEM
ENCLOSURE LAYOUTS & DETAILS
INSTRUMENTATION DISTRIBUTION BOX

SIZE F | DWG. NO. 584F0301001 | REV —

TITLE | PROJ. NO. 95255 | SHEET | OF

P:\95255\DRAWINGS\ELECT\E-18.DWG 02-MAR-2011 15:05 JOBETL

E-18

KSC FORM 1-11 (REV. 3/76) (C/G 3/93)

EAR 99

FOR ANY PURPOSE OTHER THAN IN CONNECTION WITH A DEFINITELY RELATED GOVERNMENT PROCUREMENT OPERATION, THE UNITED STATES GOVERNMENT THEREBY INCURS NO RESPONSIBILITY NOR ANY OBLIGATION WHATSOEVER; AND THE FACT THAT THE GOVERNMENT MAY HAVE FORMULATED, FURNISHED, OR IN ANY WAY SUPPLIED THE SAID DRAWINGS, SPECIFICATIONS OR ANY OTHER DATA IS NOT TO BE REGARDED BY IMPLICATION OR OTHERWISE IN ANY MANNER LICENSING THE HOLDER OR ANY OTHER PERSONS OR CORPORATION, OR CONVEYING ANY RIGHTS OR PERMISSION TO MANUFACTURE, USE, OR SELL ANY PATENTED INVENTION THAT IN ANY WAY BE RELATED THERETO.

EAR 99 – NO LICENSE REQUIRED

The Information contained in this document is technical in content, but not technical data as defined by the International Traffic in Arms (ITAR) or the Export Administration Regulations (EAR), and therefore is EAR 99 NLR, meaning no license required, suitable for public release. (General Prohibition Six (Embargo) applies to all items subject to the EAR, i.e. items on the CCL and within EAR 99 NLR. You may not make an export or reexport contrary to the prohibitions of part 746 (Embargos and Other Special Controls) of the EAR and 22 CFR part 126.1 of the ITAR).

EDDR # 113043 : NASA KSC Export Control Office (321- 867-9209)

EAR 99

BILL OF MATERIALS				
ITEM	QTY	DESCRIPTION	MANUFACTURER	PART NUMBER
1	1	NEMA 4X ENCLOSURE TWO DOOR 48"x48"x12" (HXWXL) MODIFIED FOR CUSTOM 44"x40" PANEL	HOFFMAN	A48H4812WFSSLP3PT
2	3	GROUND STRAPS	HOFFMAN	AGS816
3	1	THERMO ELECTRIC AIR CONDITIONER 400BTU	EIC SOLUTIONS	AAC-140-4XT-HC-DC
4	1	RAIN SHROUD ACCESSORY	EIC SOLUTIONS	EICRS-140V
5	1	CONDENSATE DRIP PAN ACCESSORY	EIC SOLUTIONS	EICDP-140V
6	1	PANELVIEW PLUS 1500 TOUCH SCREEN	ALLEN-BRADLEY	2711P-T15C15A2
7	1	LAPTOP INTERFACE NEMA 4X OUTLET BOX	GRACE ENGINEERED PRODUCTS INC.	P-R2A8-M6RF5
8	1	2-POSITION PUSH PULL/TWIST RELEASE PUSHBUTTON	ALLEN-BRADLEY	800T-FXTQ24RA1
9	1	EMERGENCY STOP LEGEND	ALLEN-BRADLEY	800T-X648J
10	2	RJ45 BULKHEAD CONNECTORS	AMPHENOL	RJFTV7PEM1G
11	2	RJ45 RECEPTACLE CAP	AMPHENOL	RJFTVC7G
12	8	ISOLATED JACK TO JACK BNC TO BNC CONNECTOR	ALLEN-BRADLEY	1786-BNCJI

A.
A.

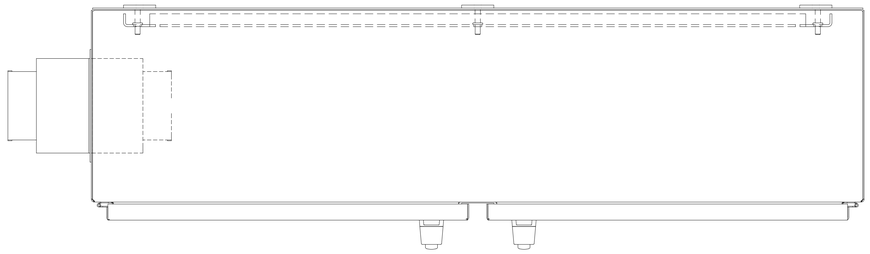

TOP VIEW
SCALE: 1:4

SPECIFIC NOTES:

A. ITEM NOT SHOWN ON DRAWING.

B. TOUCH SCREEN COMES WITH A PANEL CUTOUT TEMPLATE, BE SURE TO LOCATE TOUCH SCREEN FAR ENOUGH TO THE RIGHT TO AVOID DOOR LATCHING MECHANISM.

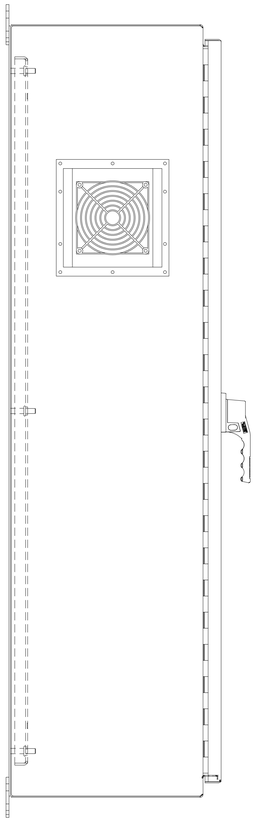

SIDE VIEW
SCALE: 1:4

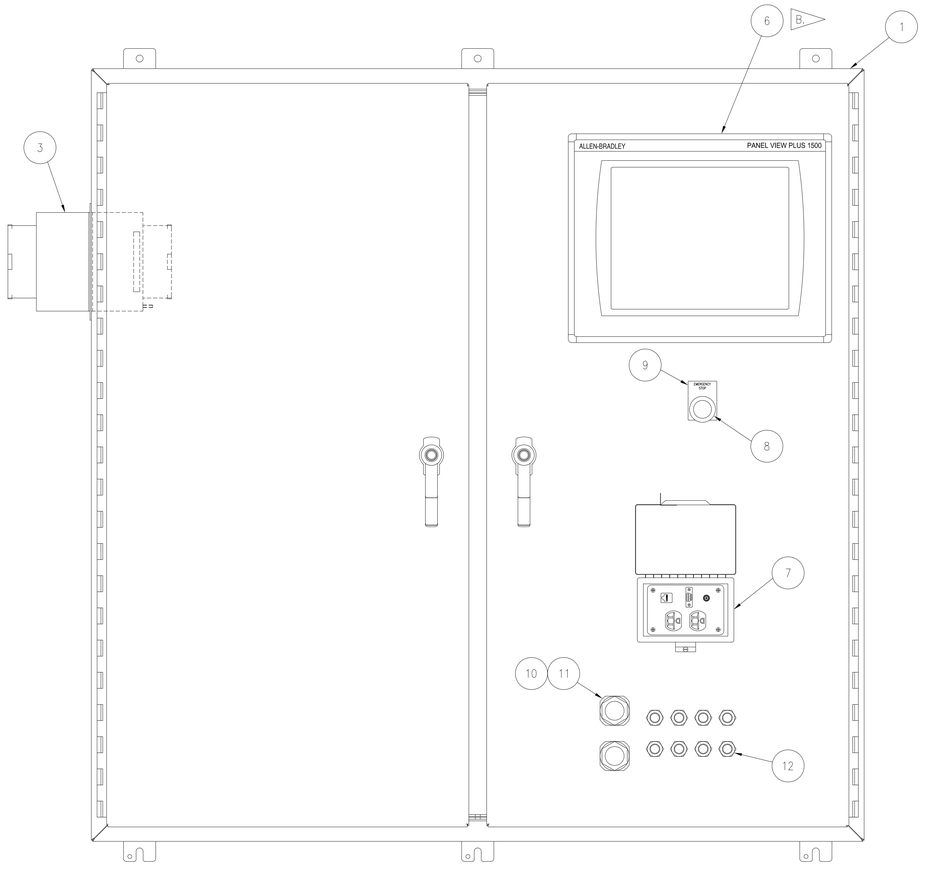

MPPU CONTROL SYSTEM ENCLOSURE
SCALE: 1:4

MOD 16E

SYM	ZONE	DESCRIPTION	DATE	APPROVAL
		REVISIONS		

SIGNATURES		DATE
DRAFTER	M. HENNIGH	05/06/11
CHECKER	J. WHITEFORD	05/06/11
ENGINEER	S. RITTER	05/06/11
	R. WITHERSPOON	05/06/11
	R. FRANCO	05/06/11
SUBMITTED	T.O. ADAMS	05/06/11
APPROVED	E.A. THAXTON	05/06/11

NATIONAL AERONAUTICS AND SPACE ADMINISTRATION
JOHN F. KENNEDY SPACE CENTER, NASA
KENNEDY SPACE CENTER, FLORIDA

ASSEMBLY DRAWINGS

MPPU REFURBISHMENT DESIGN
ENVIRONMENTAL CONTROL SYSTEM
ENCLOSURE LAYOUTS & DETAILS
CONTROL CABINET DETAILS

SIZE F | DWG. NO. 584F0301001 | REV —

TITLE | PROJ. NO. 95255 | SHEET | OF

E-20

EAR 99

KSC FORM 1-11 (REV. 3/76) (C/G 3/93)

FOR ANY PURPOSE OTHER THAN IN CONNECTION WITH A DEFINITELY RELATED GOVERNMENT PROCUREMENT OPERATION, THE UNITED STATES GOVERNMENT THEREBY INCURS NO RESPONSIBILITY NOR ANY OBLIGATION WHATSOEVER, AND THE FACT THAT THE GOVERNMENT MAY HAVE FORMULATED, FURNISHED, OR IN ANY WAY SUPPLIED THE SAID DRAWINGS, SPECIFICATIONS OR ANY OTHER DATA IS NOT TO BE REGARDED BY IMPLICATION OR OTHERWISE IN ANY MANNER LICENSING THE HOLDER OR ANY OTHER PERSONS OR CORPORATION, OR CONVEYING ANY RIGHTS OR PERMISSION TO MANUFACTURE, USE, OR SELL ANY PATENTED INVENTION THAT IN ANY WAY BE RELATED THERETO.

EAR 99 – NO LICENSE REQUIRED

The information contained in this document is technical in content, but not technical data as defined by the International Traffic in Arms Regulations (ITAR) or the Export Administration Regulations (EAR), and therefore is EAR 99 NLR, no export license required, suitable for public release. (General Prohibition Six (Embargo) applies to all items subject to the EAR, i.e. items on the CCL and within EAR 99 NLR. You may not make an export or reexport contrary to the provisions of part 746 (Embargos and Other Special Controls) of the EAR and 22 CFR part 126.1 of the ITAR).

EDDR # 113043 - NASA KSC Export Control Office (321- 867-9209)

EAR 99

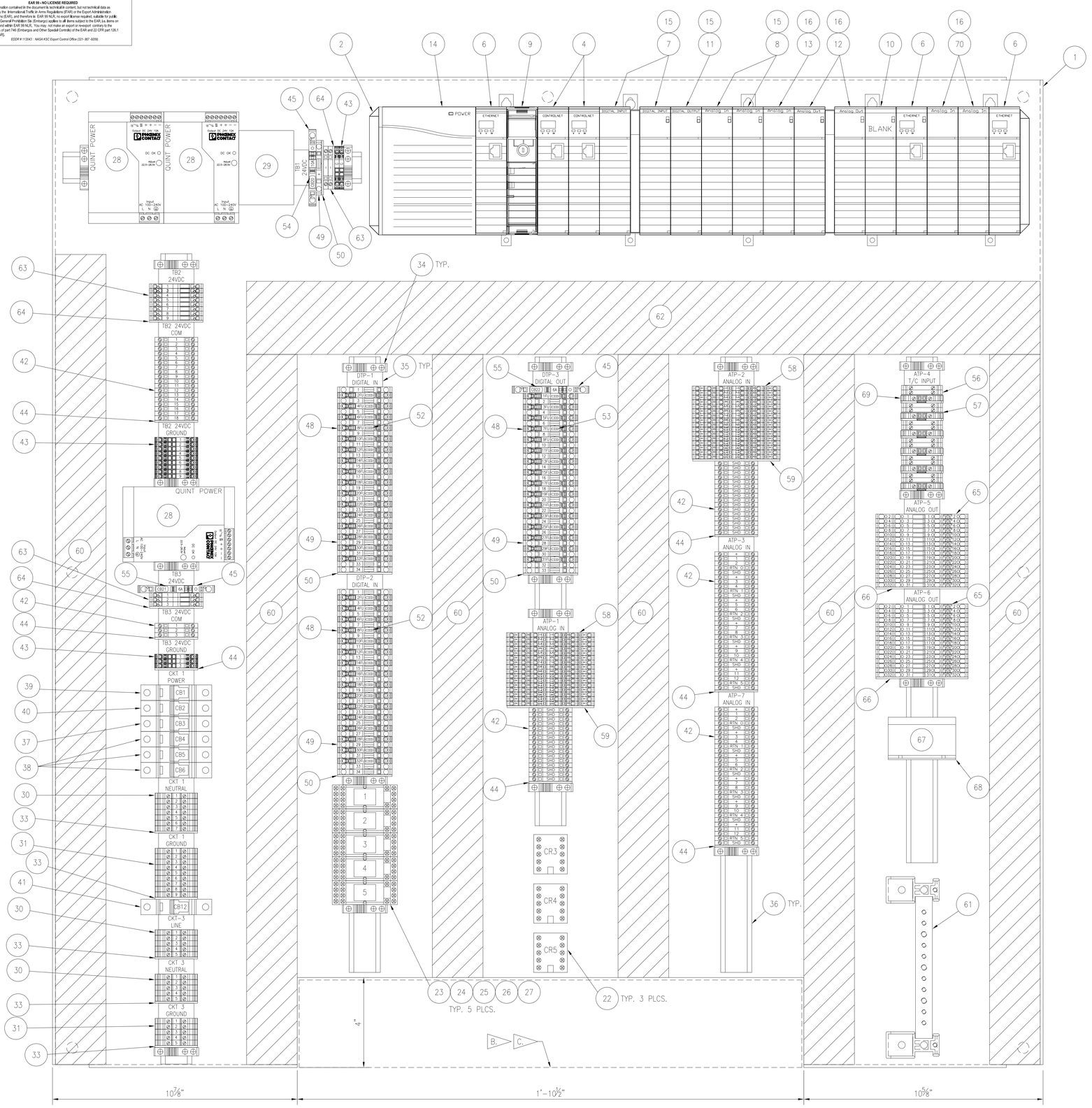

MPPU CONTROL CABINET LAYOUT
SCALE: 1:2

BILL OF MATERIALS

ITEM	QTY	DESCRIPTION	MANUFACTURER	PART NUMBER
1	1	PANEL FOR ENCLOSURE	HOFFMAN	A48P48
2	1	1756 17 SLOT CHASSIS	ALLEN BRADLEY	1756-A17
3	1	CONTROLLOGIX REPLACEMENT BATTERY FOR SERIES B PROCESSORS	ALLEN BRADLEY	1756-BA2
4	2	CONTROLNET REDUNDANT BRIDGE MODULE	ALLEN BRADLEY	1756-CN2R
A. 5	1	LOGIX5000 RS232 PROGRAMMER CABLE	ALLEN BRADLEY	1756-CP3
6	3	ETHERNET 10/100M BRIDGE MODULE (COPPER)	ALLEN BRADLEY	1756-EN2T
7	2	12/24V DC SINK/SOURCE ISOLATED INPUT 16 PTS (36 PIN)	ALLEN BRADLEY	1756-IB16I
8	2	ANALOG INPUT- CURRENT/VOLTAGE 16 PTS (36 PIN)	ALLEN BRADLEY	1756-IF16
9	1	LOGIX5563 PROCESSOR WITH 8MBYTES MEMORY	ALLEN BRADLEY	1756-L63
10	1	EMPTY SLOT FILLER FOR 1756 CHASSIS	ALLEN BRADLEY	1756-N2
11	1	5...150VDC 10...256VAC 16 N.O. INDIVIDUALLY ISOLATED OUTPUTS	ALLEN BRADLEY	1756-OW16I
12	2	ANALOG OUTPUT - CURRENT/VOLTAGE 8 PTS (20 PIN)	ALLEN BRADLEY	1756-OF8H
13	1	ENHANCED ISOLATED THERMOCOUPLE/MV INPUT 6 PTS (20 PIN)	ALLEN BRADLEY	1756-IT6I2
14	1	85-256V AC POWER SUPPLY (5V @ 13 AMP)	ALLEN BRADLEY	1756-PA75
15	5	36 PIN SCREW CLAMP BLOCK WITH STANDARD HOUSING	ALLEN BRADLEY	1756-TBCH
16	5	20 POSITION NEMA SCREW CLAMP BLOCK	ALLEN BRADLEY	1756-TBNH
A. 17	1	INDUSTRIAL COMPACT FLASH CARD 64MB	ALLEN BRADLEY	1756-CF64
A. 18	4	CONTROLNET T-TAP/STRAIGHT	ALLEN BRADLEY	1756-TPS
A. 19	4	CONTROLNET 75 OHM TERMINATOR PLUG	ALLEN BRADLEY	1756-XT
20	6	ULTRA-FLEXIBLE FOAM RUBBER INSULATION ELASTOMERIC BUNA-N/PVC FOAM 36"x48"x1/2"	MCMASTER-CARR	9349K22
21	2	THERMOSTAT DEG F WITH 1 N.O. AND 1 N.C. CONTACT		
22	3	MINI-CONTACTORS TYPE LS07 (FOR PUMPS CP1, CP2, AND CP3)	EE CONTROLS	SLS07.10-NSW1
23	5	PTH SERIES 6-16 AMP MINIATURE RELAY (PLUG IN TYPE , 24VDC COIL)	TYCO ELECTRONICS	PT22A024B (0-1721223-3)
24	5	DINRAIL SOCKETS FOR PTH RELAY	TYCO ELECTRONICS	1415526-1 (PT 78 722)
25	5	PLASTIC RETAINING CLIP FOR DINRAIL RELAY SOCKET (29MM HEIGHT)	TYCO ELECTRONICS	2-1415526-1 (PT 17 021)
26	5	MARKING TAG FOR SOCKET	TYCO ELECTRONICS	5-1419111-9 (PT 12 040)
27	5	DIODE PROTECTION MODULE (STANDARD, A1+, A2-) EM09	TYCO ELECTRONICS	9-1415036-1 (PTM T0 0A0)
28	3	110VAC SINGLE PHASE 24VDC 10A POWER SUPPLY (QUINT-PS-100-240AC/24VDC/10)	PHOENIX CONTACT	2938604
29	1	REDUNDANCY MODULE FOR TWO OF THE ABOVE POWER SUPPLIES (QUINT-DIODE/40)	PHOENIX CONTACT	2938963
30	17	110VAC TERMINAL BLOCK (UT-4)	PHOENIX CONTACT	3044102
31	14	110VAC GROUND TERMINAL BLOCK (UT 4-PE)	PHOENIX CONTACT	3044128
A. 32	5	20 POLE JUMPER FOR UT 4 TERMINAL BLOCKS (FBS20-6)	PHOENIX CONTACT	3030365
33	5	PARTITION PLATE FOR UT 4 TERMINAL BLOCKS (ATP-UT)	PHOENIX CONTACT	3047167
34	A/R	END STOP FOR TERMINAL BLOCKS (E/UK)	PHOENIX CONTACT	1201442
35	A/R	LABEL CARRIER (UBE/D)	PHOENIX CONTACT	0800307
36	A/R	35MM PERFORATED DINRAIL (NS35/7,5 - PERF755MM)	PHOENIX CONTACT	1207640
37	1	1492 MINIATURE CIRCUIT BREAKER 115VAC 6 AMPS TRIP CURVEB (CB3)	ALLEN BRADLEY	1492-SP1B060
38	3	1492 MINIATURE CIRCUIT BREAKER 115VAC 10 AMPS TRIP CURVEB (CB4,5,6)	ALLEN BRADLEY	1492-SP1B100
39	1	1492 MINIATURE CIRCUIT BREAKER 115VAC 10 AMPS TRIP CURVEC (CB1)	ALLEN BRADLEY	1492-SP1C100
40	1	1492 MINIATURE CIRCUIT BREAKER 115VAC 15 AMPS TRIP CURVEC (CB 2)	ALLEN BRADLEY	1492-SP1C150
41	1	1492 MINIATURE CIRCUIT BREAKER 115VAC 20 AMPS TRIP CURVEC (CB 12)	ALLEN BRADLEY	1492-SP1C200
42	113	SPRING CAGE FEEDTHROUGH TERMINAL BLOCKS (ST 2,5)	PHOENIX CONTACT	3031212
43	14	SPRING CAGE FEEDTHROUGH GROUND TERMINAL BLOCKS (ST 2,5-PE)	PHOENIX CONTACT	3031238
44	7	END COVER FOR ST 2,5 (D-ST 2,5)	PHOENIX CONTACT	3030417
45	3	FUSE TERMINAL BLOCK (ST4-FSI/C)	PHOENIX CONTACT	3036372
A. 46	3	10 POLE JUMPER FOR ST 2,5 TERMINAL BLOCKS (FBS 10-5)	PHOENIX CONTACT	3030213
47	3	PARTITION PLATE FOR ST 2,5 (ATP-ST4)	PHOENIX CONTACT	3030721
48	48	FUSE TERMINAL BLOCK WITH LED ST 4-HESILED 24 (5X20)	PHOENIX CONTACT	3036547
49	54	KNIFE DISCONNECT TERMINAL BLOCK (ST 4-MT)	PHOENIX CONTACT	3038875
50	A/R	PARTITION PLATE FOR ST 4-MT	PHOENIX CONTACT	3030721
A. 51	A/R	20 POLE JUMPER FOR ST 2,5-MT TERMINAL BLOCKS (FBS20-5)	PHOENIX CONTACT	3030226
52	32	500MA FUSES FAST BLOW	BUSSMANN	GMA500MA
53	16	2A FUSES FAST BLOW	BUSSMANN	GMA2A
54	1	THERMAL CIRCUIT BREAKER 10A (TCP10A)	PHOENIX CONTACT	0712314
55	2	THERMAL CIRCUIT BREAKER 6A (TCP6A)	PHOENIX CONTACT	0712275
56	6	THERMOCOUPLE TERMINAL BLOCK PAIR TYPE T (MTKD-CU/CUNI)	PHOENIX CONTACT	3100059
57	6	PARTITION PLATES FOR MTKD-CU/CUNI (ATS-MTK)	PHOENIX CONTACT	3101029
58	32	THREE LEVEL SPRING CAGE TERMINAL BLOCKS(ST 2,5-3L)	PHOENIX CONTACT	3036042
59	3	END COVER FOR THREE LEVEL TERMINAL BLOCKS (D-ST 2,5-3L)	PHOENIX CONTACT	3036660
60	A/R	WIRE DUCT (2" x 4") COVER PART# (C2WH6)	PANDUIT	G2X4WH6
61	A/R	GROUND BAR	HOFFMAN	PGS2K OR EQUAL
62	A/R	WIRE DUCT (3" x 4") COVER PART# (C3WH6)	PANDUIT	G3X4WH6
63	13	SPRING CAGE FEEDTHROUGH TERMINAL BLOCK - ST 2,5	PHOENIX CONTACT	3031212
64	3	END COVER FOR ST 2,5	PHOENIX CONTACT	3030417
65	32	DOUBLE LEVEL SPRING-CAGE KNIFE DISCONNECT TERMINAL BLOCK - ZFKK 2,5-MT	PHOENIX CONTACT	3025011
66	2	END COVER FOR ZFKK 2,5-MT	PHOENIX CONTACT	3024151
67	1	MAGNUM ESD42 EDGE SWITCH	GARRETT	ESD42PR00-24VDC
68	1	DIN RAIL BRACKET FOR ESD42	GARRETT	DIN-RAIL-MC2
69	6	MTKD DISCONNECT TERMINAL BLOCK	PHOENIX CONTACT	3100017
70	2	ANALOG INPUT CARD 6PI CURRENT/VOLTAGE	ALLEN BRADLEY	1756-IF6I

SPECIFIC NOTES:

A. ITEM NOT SHOWN ON DRAWING.

B. FINAL CONDUIT LOCATIONS SHALL BE LOCATED AT TIME OF ASSEMBLY.

C. AREA RESERVED FOR CONDUIT ENTRY INTO CONTROL ENCLOSURE.

SYM	ZONE	DESCRIPTION	DATE	APPROVAL

REVISIONS

SIGNATURES		DATE
DRAFTER	M. HENNIGH	05/06/11
CHECKER	J. WHITEFORD	05/06/11
ENGINEER	S. RITTER	05/06/11
	R. WITHERSPOON	05/06/11
	R. FRANCO	05/06/11
SUBMITTED	T.O. ADAMS	05/06/11
APPROVED	E.A. THAXTON	05/06/11

NATIONAL AERONAUTICS AND SPACE ADMINISTRATION
JOHN F. KENNEDY SPACE CENTER, NASA
KENNEDY SPACE CENTER, FLORIDA

ASSEMBLY DRAWINGS
MPPU REFURBISHMENT DESIGN
ENVIRONMENTAL CONTROL SYSTEM
MPPU CONTROL CABINET
LAYOUT & DETAILS

SIZE F | DWG. NO. 584F0301001 | REV –

TITLE | PROJ. NO. 95255 | SHEET | OF

E-21

P:\95255\DRAWINGS\ELECT\E-21.DWG 12-APR-2011 09:15 JOBETL

EAR 99

KSC FORM 1-11 (REV. 3/76) (C/G 3/93)

FOR ANY PURPOSE OTHER THAN IN CONNECTION WITH A DEFINITELY RELATED GOVERNMENT PROCUREMENT OPERATION, THE UNITED STATES GOVERNMENT THEREBY INCURS NO RESPONSIBILITY NOR ANY OBLIGATION WHATSOEVER; AND THE FACT THAT THE GOVERNMENT MAY HAVE FORMULATED, FURNISHED, OR IN ANY WAY SUPPLIED THE SAID DRAWINGS, SPECIFICATIONS OR ANY OTHER DATA IS NOT TO BE REGARDED BY IMPLICATION OR OTHERWISE IN ANY MANNER LICENSING THE HOLDER OR ANY OTHER PERSONS OR CORPORATION, OR CONVEYING ANY RIGHTS OR PERMISSION TO MANUFACTURE, USE, OR SELL ANY PATENTED INVENTION THAT IN ANY WAY BE RELATED THERETO.

EAR 99 – NO LICENSE REQUIRED

The Information contained in this document is technical in content, but not technical data as defined by the International Traffic in Arms (ITAR) or the Export Administration Regulations (EAR), and therefore is EAR 99 NLR, and no license required, suitable for public release. (General Prohibition Six (Embargo) applies to all items subject to the EAR, i.e. items on the CCL and within EAR 99 NLR. You may not make an export or reexport contrary to the provisions of part 746 (Embargos and Other Special Controls) of the EAR and 22 CFR part 126.1 of the ITAR).

EDDR # 113043 : NASA KSC Export Control Office (321- 867- 6039)

EAR 99

BILL OF MATERIALS

ITEM	QTY	DESCRIPTION	MANUFACTURER	PART NUMBER
1	1	SELECTOR SWITCH	ELECTROSWITCH	103204D2
2	3	15 AMP CIRCUIT BREAKER	ALLEN BRADLEY	1492-SP1C150
3	1	10 AMP CIRCUIT BREAKER	ALLEN BRADLEY	1492-SP1B100
4	2	TIMER RELAY	DAYTON	1EJE8
5	3	110VAC TERMINAL BLOCK (UT-4)	PHOENIX CONTACT	3044102
6	1	PARTITION PLATE FOR UT 4 TERMINAL BLOCKS (ATP-UT)	PHOENIX CONTACT	3047167
7	3	END STOP FOR TERMINAL BLOCKS (E/UK)	PHOENIX CONTACT	1201442
8	1	LABEL CARRIER (UBE/D)	PHOENIX CONTACT	0800307
9	A/R	35MM PERFORATED DINRAIL (NS35/7,5 - PERF75SMM)	PHOENIX CONTACT	1207640
A. 10	1	15 KVA TRANSFORMER	ACME	T3-53311
A. 11	3	20A CIRCUIT BREAKERS	SIEMENS	BQ1B020

SPECIFIC NOTES:

A. EXISTING EQUIPMENT.

B APPLY WARNING LABEL TO ENCLOSURE COVER. LOCATE FOR EASE OF VIEWING.

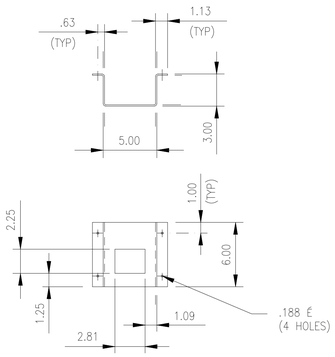

DETAIL WA
SCALE: NONE

MATL: 16 GA 304 SST

QTY: 1 PER UNIT

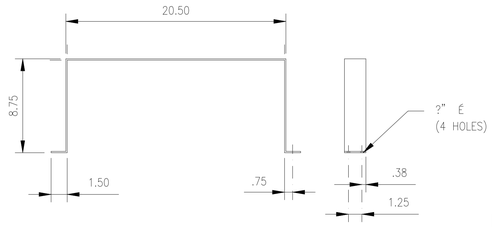

DETAIL VZ
SCALE: NONE

MATL: 16 GA 304 SST

QTY: 1 PER UNIT

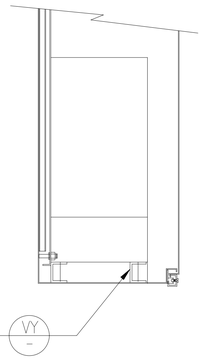

DETAIL VY

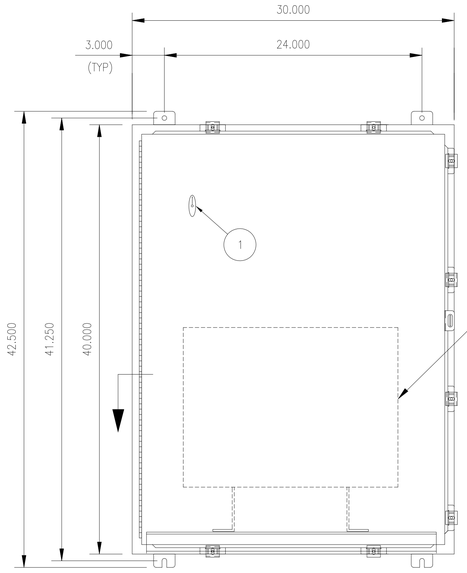

DETAIL VX
E-10

MPPU-A TRANSFORMER BOX
SCALE: NONE

MOD 160

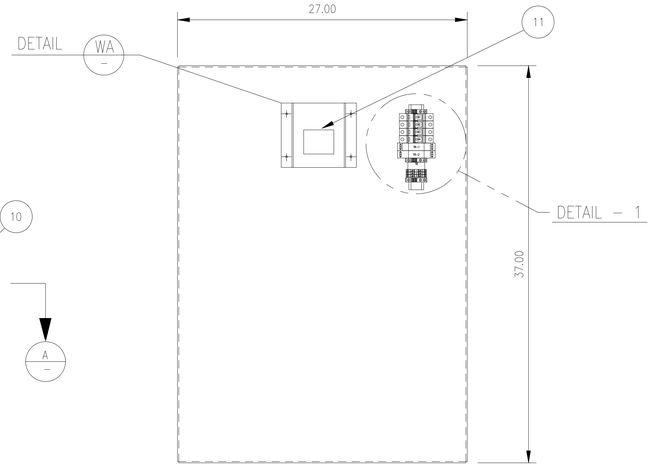

SUB PLATE
SCALE: NONE

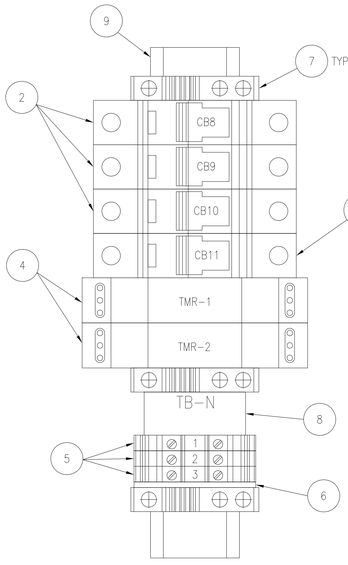

DETAIL – 1
SCALE: 1:1

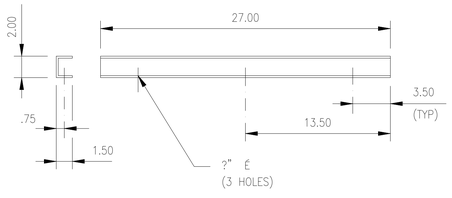

DETAIL VY
SCALE: NONE

MATL: 7 GA 304 SST

QTY: 2 PER UNIT

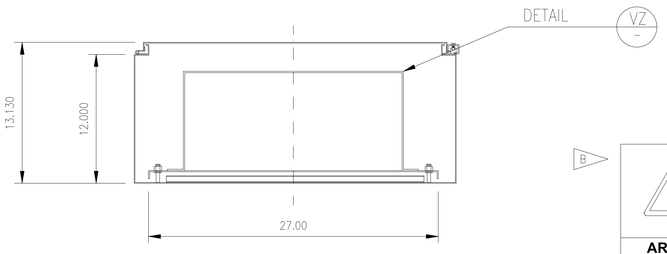

SECTION A
SCALE: NONE

B

WARNING

Arc Flash and Shock Hazard
Appropriate PPE Required

ARC FLASH PROTECTION		SHOCK PROTECTION	
Working Distance:	**18 inches**	Shock Hazard when Cover is removed:	**208 VAC**
Incident Energy:	**25 cal/cm^2**	Limited Approach:	**120 inches**
Flash Protection Boundary:	**25.1 inches**	Restricted Approach:	**0 inches**
PPE Category:	**Category 0**	Prohibited Approach:	**0 inches**
		Glove Class:	**00**

Bus: Panel MPPU-A ***Prot. Dev: Main CB***

Prepared Date: 04/19/2011 Task:

Warning: Changes in equipment settings or system configuration will invalidate the calculated values and PPE requirements

SYM	ZONE	DESCRIPTION	DATE	APPROVAL
		REVISIONS		

SIGNATURES		DATE
DRAFTER	M. HENNIGH	05/06/11
CHECKER	J. WHITEFORD	05/06/11
ENGINEER	B. GARLAND	05/06/11
	R. WITHERSPOON	05/06/11
	R. FRANCO	05/06/11
SUBMITTED	T.O. ADAMS	05/06/11
APPROVED	E.A. THAXTON	05/06/11

NATIONAL AERONAUTICS AND SPACE ADMINISTRATION
JOHN F. KENNEDY SPACE CENTER, NASA
KENNEDY SPACE CENTER, FLORIDA

ASSEMBLY DRAWINGS

MPPU REFURBISHMENT DESIGN
ENVIRONMENTAL CONTROL SYSTEM
MPPU – A ENCLOSURE

SIZE F | DWG. NO. 584F0301001 | REV —

TITLE | PROJ. NO. 95255 | SHEET | OF

E-22

EAR 99

FOR ANY PURPOSE OTHER THAN IN CONNECTION WITH A DEFINITELY RELATED GOVERNMENT PROCUREMENT OPERATION, THE UNITED STATES GOVERNMENT THEREBY INCURS NO RESPONSIBILITY NOR ANY OBLIGATION WHATSOEVER, AND THE FACT THAT THE GOVERNMENT MAY HAVE FORMULATED, FURNISHED, OR IN ANY WAY SUPPLIED THE SAID DRAWINGS, SPECIFICATIONS OR ANY OTHER DATA IS NOT TO BE REGARDED BY IMPLICATION OR OTHERWISE IN ANY MANNER LICENSING THE HOLDER OR ANY OTHER PERSONS OR CORPORATION, OR CONVEYING ANY RIGHTS OR PERMISSION TO MANUFACTURE, USE, OR SELL ANY PATENTED INVENTION THAT IN ANY WAY BE RELATED THERETO.

EAR 99 - NO LICENSE REQUIRED

This information contained in the document is technical in content, but not technical data as defined by the International Traffic in Arms Regulations (ITAR) or the Export Administration Regulations (EAR), and therefore is EAR 99 NLR, no export license required, suitable for public release. (General Prohibition Six (Embargo) applies to all items subject to the EAR, i.e. items on the CCL and within EAR 99 NLR. You may not make an export or reexport contrary to the provisions of part 746 (Embargos and Other Special Controls) of the EAR and 22 CFR part 126.1 of the ITAR).

EDDR # 113043 : NASA KSC Export Control Office (321- 867-6009)

EAR 99

BILL OF MATERIALS

ITEM	QTY	DESCRIPTION	MANUFACTURER	PART NUMBER
1	1	NEMA 4X ENCLOSURE 16"x14"x6" SST	HOFFMAN	A16H1406SSLP
2	1	ENCLOSURE PANEL 14.75"x12.88" SST	HOFFMAN	A-16P14SS
3	A/R	CONDUIT FITTING INSULATED (SIZE AS REQUIRED)	LIQUIDTITE	T&B LT SERIES
4	100	TERMINAL BLOCK	PHOENIX CONTACT	3036343
5	4	END STOP FOR TERMINAL BLOCKS (E/UK)	PHOENIX CONTACT	1201442
6	A/R	WIRE DUCT (2" x 1") COVER PART# (2WH6)	PANDUIT	G2X1WH6
7	2	LABEL CARRIER (UBE/D)	PHOENIX CONTACT	0800307
8	2	END COVER FOR D-ST, 2.5	PHOENIX CONTACT	3030488
9	A/R	35 MM PERFORATED DIN RAIL (N535/7.5)	PHOENIX CONTACT	1207640

SPECIFIC NOTES:

A. FINAL CONDUIT PENETRATIONS SHALL BE DETERMINED BY CONTRACTOR.

B. DISTRIBUTION BOX SHALL BE FIELD FIT & MOUNTED IN LOCATION CENTRAL TO CONTROL VALVES.

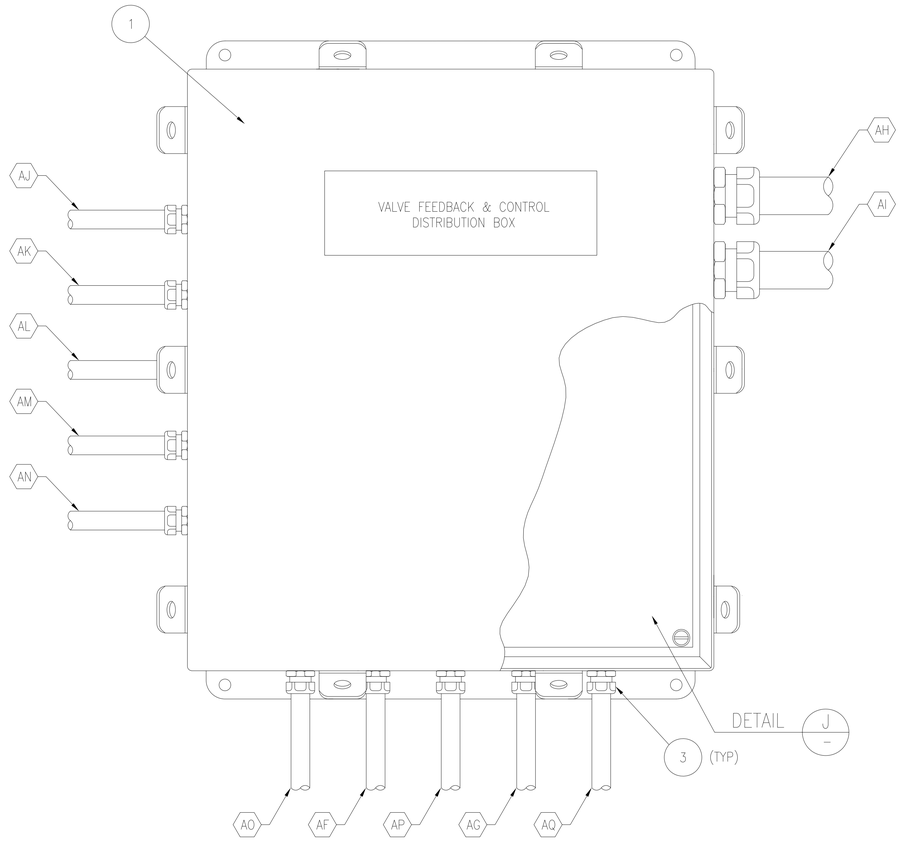

DETAIL N
SCALE: 1:2
E-10

MOD 17H

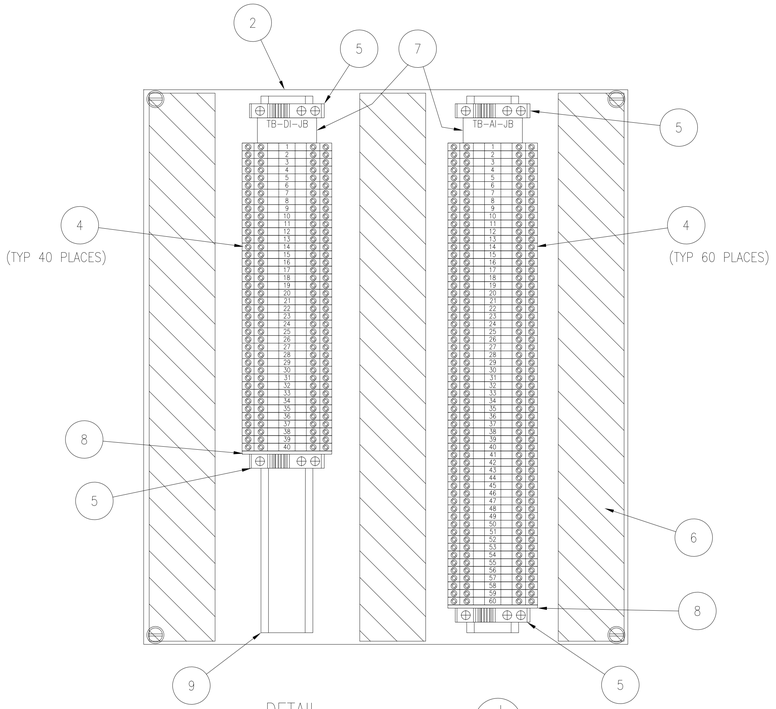

DETAIL J
SCALE: 1:2
–

SYM	ZONE	DESCRIPTION	DATE	APPROVAL

REVISIONS

SIGNATURES		DATE
DRAFTER	T. JOBE	05/06/11
CHECKER	J. WHITEFORD	05/06/11
ENGINEER	S. RITTER	05/06/11
	R. WITHERSPOON	05/06/11
	R. FRANCO	05/06/11
SUBMITTED	T.O. ADAMS	05/06/11
APPROVED	E.A. THAXTON	05/06/11

NATIONAL AERONAUTICS AND SPACE ADMINISTRATION
JOHN F. KENNEDY SPACE CENTER, NASA
KENNEDY SPACE CENTER, FLORIDA

ASSEMBLY DRAWINGS
MPPU REFURBISHMENT DESIGN
ENVIRONMENTAL CONTROL SYSTEM
VALVE FEEDBACK & CONTROL
DISTRIBUTION BOX

SIZE F | DWG. NO. 584F0301001 | REV –

TITLE | PROJ. NO. 95255 | SHEET OF

E-23

P:\95255\DRAWINGS\ELECT\E-23.DWG 18-MAR-2011 10:40 JOBETL

KSC FORM 1-11 (REV. 3/76) (C/G 3/93)

EAR 99

FOR ANY PURPOSE OTHER THAN IN CONNECTION WITH A DEFINITELY RELATED GOVERNMENT PROCUREMENT OPERATION, THE UNITED STATES GOVERNMENT THEREBY INCURS NO RESPONSIBILITY NOR ANY OBLIGATION WHATSOEVER; AND THE FACT THAT THE GOVERNMENT MAY HAVE FORMULATED, FURNISHED, OR IN ANY WAY SUPPLIED THE SAID DRAWINGS, SPECIFICATIONS OR ANY OTHER DATA IS NOT TO BE REGARDED BY IMPLICATION OR OTHERWISE IN ANY MANNER LICENSING THE HOLDER OR ANY OTHER PERSONS OR CORPORATION, OR CONVEYING ANY RIGHTS OR PERMISSION TO MANUFACTURE, USE, OR SELL ANY PATENTED INVENTION THAT IN ANY WAY BE RELATED THERETO.

EAR 99 – NO LICENSE REQUIRED

The information contained in this document is technical in content, but not technical data as defined by the International Traffic in Arms (ITAR) or the Export Administration Regulations (EAR), and therefore is EAR 99 NLR, no export license required, suitable for public release. (General Prohibition Six (Embargo) applies to all items subject to the EAR, i.e. items on the CCL and within EAR 99 NLR. You may not make an export or reexport contrary to the provisions of part 746 (Embargos and Other Special Controls) of the EAR and 22 CFR part 126.1 of the ITAR).

EDDR # 113043 : NASA KSC Export Control Office (321- 867-9209)

EAR 99

SPECIFIC NOTES:

A. THIS IS THE VALVE CONTROL/FEEDBACK JUNCTION BOX.

AUXILIARY POWER

MPPU PANEL

MPPU ISOLATION TRANSFORMER BOX — XFMR1

REFRIGERATION CONTROL CABINET

CONDENSER FANS STARTER CABINET

MOTOR #1 | MOTOR #2 | MOTOR #3 | MOTOR #4

BLOWER MOTOR STARTER — MS5B

BLOWER MOTOR — MTR5

STARTER CABINET — MS6

FS1

FS2

DUCT HEATER #2 — A524797 — HTR4B

DUCT HEATER #1 — A524796 — HTR4A

HEATER CONTROLLER — PC1

HEAT REJECTION FAN #1 — A524791

HEAT REJECTION FAN #2 — A524792

HEAT REJECTION FAN #3 — A524793

J BOX

1 E-29

2 E-29

MPPU CONTROL CABINET

120 VAC CONVENIENCE OUTLET

VALVES 120 VAC DISTRIBUTION BOX

VALVE CONTROL/ FEEDBACK JB

OUTLET 3 DUCT FLOW CONTROL VALVE — A524783 — FV3A

OUTLET 2 DUCT FLOW CONTROL VALVE — A524782 — FV2A

OUTLET 1 DUCT FLOW CONTROL VALVE — A524781 — FV1A

OUTLET 3 DUCT TEMP CONTROL VALVE — A524768 — FV3B

OUTLET 2 DUCT TEMP CONTROL VALVE — A524767 — FV2B

OUTLET 1 DUCT TEMP CONTROL VALVE — A524766 — FV1B

PLENUM DUMP VALVE — A524757 — FV7

HEAT ABS COIL FLOW VALVE — A524811 — FV10

BLOWER INLET VANE CONTROL VALVE — A524750 — FV5

DUCT TEMP CONTROL BYPASS VALVE — A524765 — FV4

PLENUM REHEAT PUMP — A524795 — CP1

PLENUM PRE-COOL/ REHEAT SYSTEM PUMP — A524809 — CP2

HEAT REJECTION SYSTEM PUMP — A524810 — CP3

SYM	ZONE	DESCRIPTION	DATE	APPROVAL
		REVISIONS		

SIGNATURES		DATE
DRAFTER	T. JOBE	05/06/11
CHECKER	J. WHITEFORD	05/06/11
ENGINEER	S. RITTER	05/06/11
	R. WITHERSPOON	05/06/11
	R. FRANCO	05/06/11
SUBMITTED	T.O. ADAMS	05/06/11
APPROVED	E.A. THAXTON	05/06/11

NATIONAL AERONAUTICS AND SPACE ADMINISTRATION
JOHN F. KENNEDY SPACE CENTER, NASA
KENNEDY SPACE CENTER, FLORIDA

ASSEMBLY DRAWINGS

MPPU REFURBISHMENT DESIGN ENVIRONMENTAL CONTROL SYSTEM ELECTRICAL BLOCK DIAGRAMS SHEET 1 OF 2

SIZE	DWG. NO.	REV
F	584F0301001	–

PROJ. NO. 95255 | SHEET | OF

TITLE

E-28

P:\95255\DRAWINGS\ELECT\E-28.DWG 03-MAR-2011 10:11 JOBETL

KSC FORM 1-11 (REV. 3/76) (C/G 3/93)

EAR 99

FOR ANY PURPOSE OTHER THAN IN CONNECTION WITH A DEFINITELY RELATED GOVERNMENT PROCUREMENT OPERATION, THE UNITED STATES GOVERNMENT THEREBY INCURS NO RESPONSIBILITY NOR ANY OBLIGATION WHATSOEVER; AND THE FACT THAT THE GOVERNMENT MAY HAVE FORMULATED, FURNISHED, OR IN ANY WAY SUPPLIED THE SAID DRAWINGS, SPECIFICATIONS OR ANY OTHER DATA IS NOT TO BE REGARDED BY IMPLICATION OR OTHERWISE IN ANY MANNER LICENSING THE HOLDER OR ANY OTHER PERSONS OR CORPORATION, OR CONVEYING ANY RIGHTS OR PERMISSION TO MANUFACTURE, USE, OR SELL ANY PATENTED INVENTION THAT IN ANY WAY BE RELATED THERETO.

EAR 99 – NO LICENSE REQUIRED

The information contained in this document is technical in content, but not technical data as defined by the International Traffic in Arms (ITAR) or the Export Administration Regulations (EAR), and therefore is EAR 99 NLR, no export license required, suitable for public release. (General Prohibition Six (Embargo) applies to all items subject to the EAR, i.e. items on the CCL and within EAR 99 NLR. You may not make an export or reexport contrary to the prohibitions of part 746 (Embargos and Other Special Controls) of the EAR and 22 CFR part 126.1 of the ITAR).

EDDR # 113043 : NASA KSC Export Control Office (321-867-6039)

EAR 99

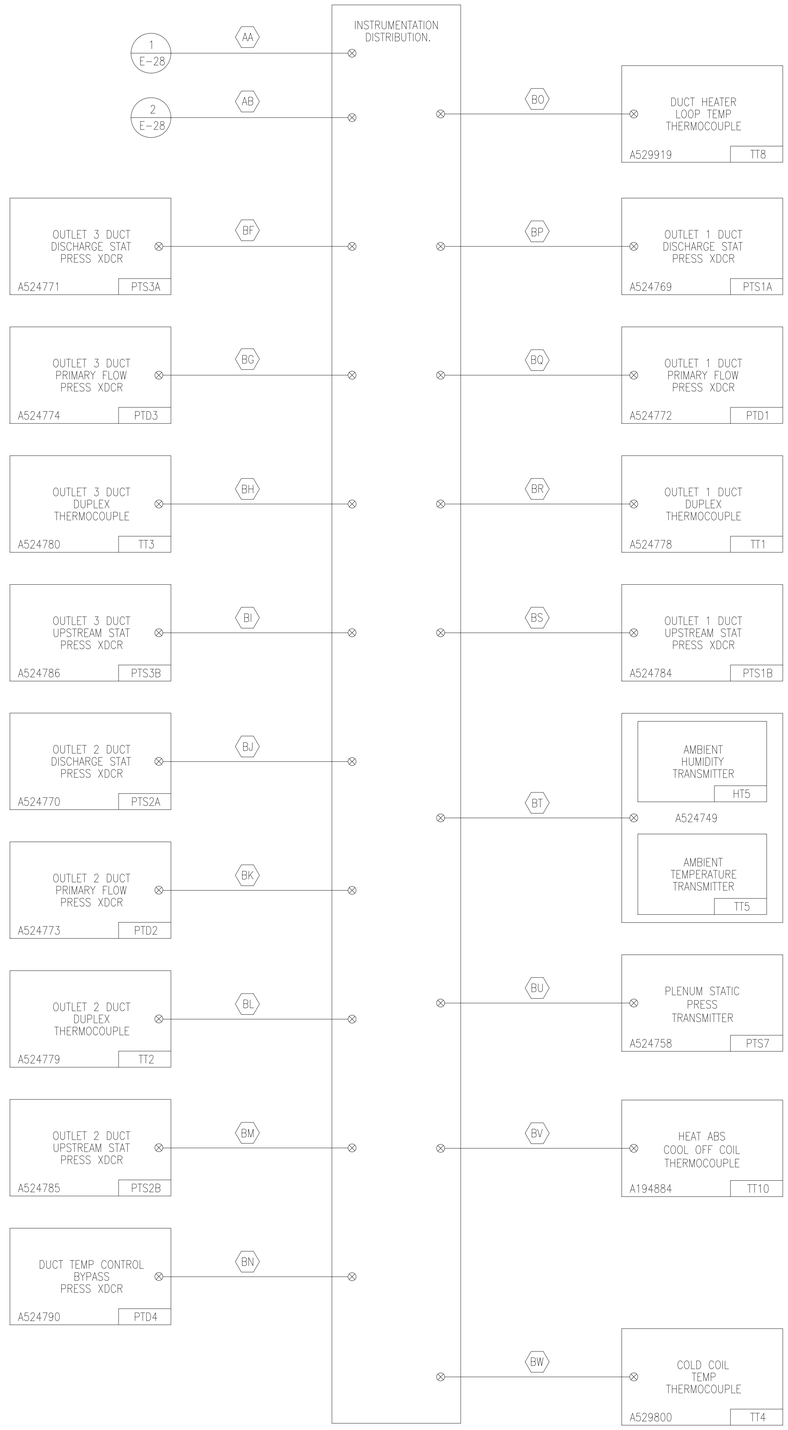

SYM	ZONE	DESCRIPTION	DATE	APPROVAL
		REVISIONS		

SIGNATURES		DATE
DRAFTER	T. JOBE	05/06/11
CHECKER	J. WHITEFORD	05/06/11
ENGINEER	S. RITTER	05/06/11
	R. WITHERSPOON	05/06/11
	R. FRANCO	05/06/11
SUBMITTED	T.O. ADAMS	05/06/11
APPROVED	E.A. THAXTON	05/06/11
TITLE		

NATIONAL AERONAUTICS AND SPACE ADMINISTRATION
JOHN F. KENNEDY SPACE CENTER, NASA
KENNEDY SPACE CENTER, FLORIDA

ASSEMBLY DRAWINGS

MPPU REFURBISHMENT DESIGN ENVIRONMENTAL CONTROL SYSTEM ELECTRICAL BLOCK DIAGRAMS SHEET 2 OF 2

SIZE	DWG. NO.	REV
F	584F0301001	–
PROJ. NO.	95255	SHEET OF

P:\95255\DRAWINGS\ELECT\E-29.DWG 15-FEB-2011 10:42 JOBETL

E-29

FOR ANY PURPOSE OTHER THAN IN CONNECTION WITH A DEFINITELY RELATED GOVERNMENT PROCUREMENT OPERATION, THE UNITED STATES GOVERNMENT THEREBY INCURS NO RESPONSIBILITY NOR ANY OBLIGATION WHATSOEVER; AND THE FACT THAT THE GOVERNMENT MAY HAVE FORMULATED, FURNISHED, OR IN ANY WAY SUPPLIED THE SAID DRAWINGS, SPECIFICATIONS OR ANY OTHER DATA IS NOT TO BE REGARDED BY IMPLICATION OR OTHERWISE IN ANY MANNER LICENSING THE HOLDER OR ANY OTHER PERSONS OR CORPORATION, OR CONVEYING ANY RIGHTS OR PERMISSION TO MANUFACTURE, USE, OR SELL ANY PATENTED INVENTION THAT IN ANY WAY BE RELATED THERETO.

EAR 99 – NO LICENSE REQUIRED

The information contained in this document is technical in content, but not technical data as defined by the International Traffic in Arms (ITAR) or the Export Administration Regulations (EAR), and therefore is EAR 99 NLR, meaning it is not export regulated, suitable for public release. (General Prohibition Six (Embargo) applies to all items subject to the EAR, i.e. items on the CCL and within EAR 99 NLR. You may not make an export or reexport contrary to the provisions of part 746 (Embargos and Other Special Controls) of the EAR and 22 CFR part 126.1 of the ITAR).

EDDR # 113043 : NASA KSC Export Control Office (321- 867-9209)

EAR 99

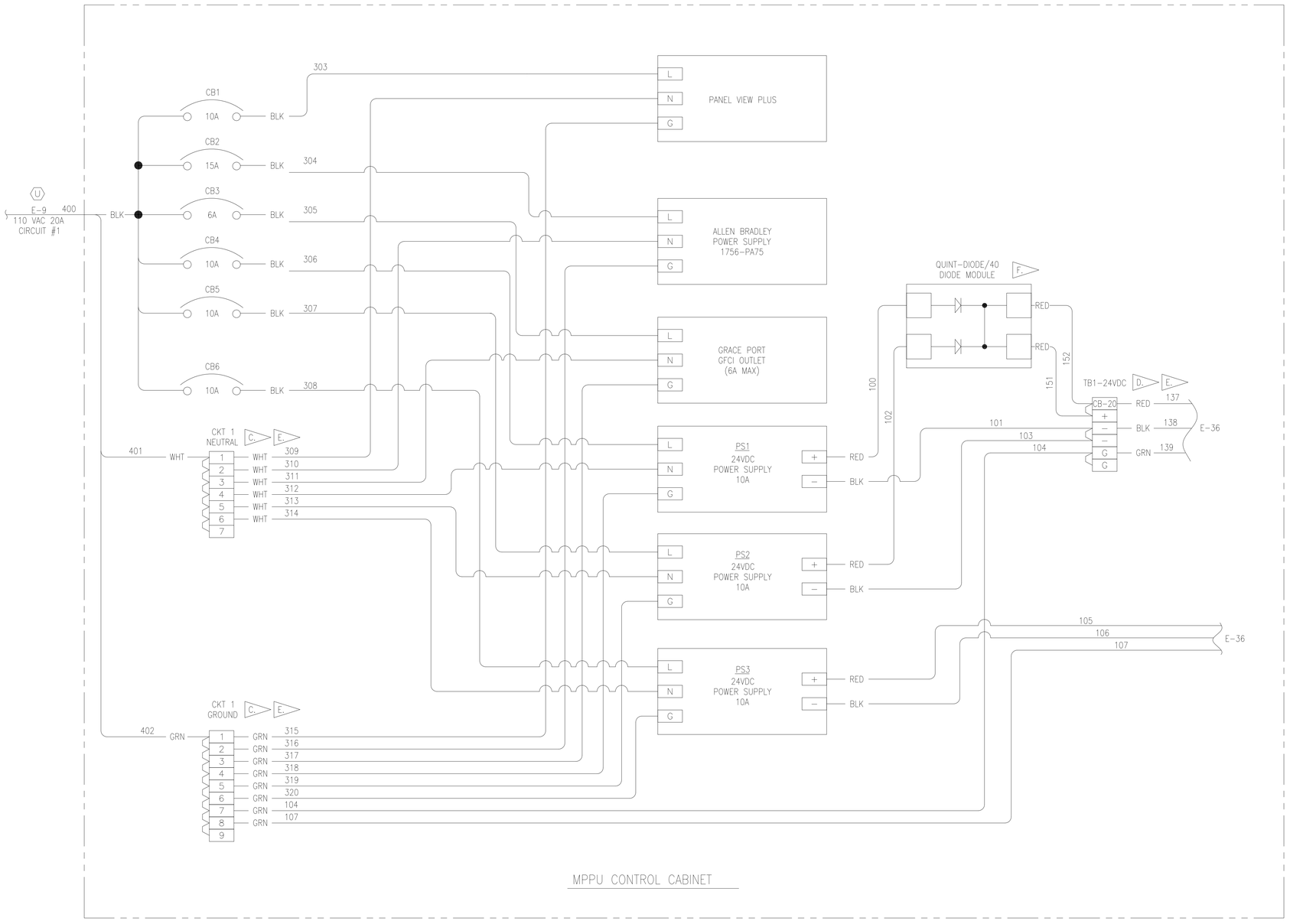

SPECIFIC NOTES:

A. CB-20 IS A 10A THERMO MAGNETIC CIRCUIT BREAKER OF TYPE PHOENIX CONTACT TCP10A P/N 072314.

B. ALL WIRING SHALL BE STRANDED COPPER WIRE.

C. TERMINAL BLOCK JUMPERS ARE 20 POLE CUT TO FIT BRIDGES OF TYPE PHOENIX CONTACT FBS20-6 P/N 3030365.

D. TERMINAL BLOCK JUMPERS ARE 20 POLE CUT TO FIT BRIDGES OF TYPE PHOENIX CONTACT FBS20-5 P/N 3030226.

E. USE FERRULES TO TERMINATE ALL WIRES ON TERMINAL BLOCKS.

F. DIODE MODULE USED TO MAKE PS1 & PS2 FULLY REDUNDANT. MAX CURRENT DRAW OF TB1-24VDC SHALL NOT EXCEED 8.5A.

G. CB-3 IS A 6A MINIATURE CIRCUIT BREAKER OF TYPE ALLEN BRADLEY P/N 1492-SP1B060. THIS BREAKER HAS A TYPE B TRIP CURVE.

H. CB-1 IS A 10A MINIATURE CIRCUIT BREAKER OF TYPE ALLEN BRADLEY P/N 1492-SP1C100. THIS BREAKER HAS A TYPE C TRIP CURVE.

J. CB-4, CB-5 & CB-6 ARE 10A MINIATURE CIRCUIT BREAKERS OF TYPE ALLEN BRADLEY P/N 1492-SP1B100. THESE BREAKERS HAVE A TYPE B TRIP CURVE.

K. CB-2 IS A 15A MINIATURE CIRCUIT BREAKER OF TYPE ALLEN BRADLEY P/N 1492-SP1C150. THIS BREAKER HAS A TYPE C TRIP CURVE.

L ONLY REPLACE CIRCUIT BREAKERS WITH SIMILAR TYPE & TRIP CURVE.

M. SEE DRAWING E-2 FOR WIRE NUMBERING & TYPE SCHEDULE.

SYM	ZONE	DESCRIPTION	DATE	APPROVAL
		REVISIONS		

SIGNATURES		DATE
DRAFTER	T. JOBE	05/06/11
CHECKER	J. WHITEFORD	05/06/11
ENGINEER	S. RITTER	05/06/11
	R. WITHERSPOON	05/06/11
	R. FRANCO	05/06/11
SUBMITTED	T.O. ADAMS	05/06/11
APPROVED	E.A. THAXTON	05/06/11

NATIONAL AERONAUTICS AND SPACE ADMINISTRATION
JOHN F. KENNEDY SPACE CENTER, NASA
KENNEDY SPACE CENTER, FLORIDA

ASSEMBLY DRAWINGS
MPPU REFURBISHMENT DESIGN
ENVIRONMENTAL CONTROL SYSTEM
MPPU POWER WIRING
SHEET 1

SIZE F | DWG. NO. 584F0301001 | REV –
PROJ. NO. 95255 | SHEET | OF

TITLE

E-33

FOR ANY PURPOSE OTHER THAN IN CONNECTION WITH A DEFINITELY RELATED GOVERNMENT PROCUREMENT OPERATION, THE UNITED STATES GOVERNMENT THEREBY INCURS NO RESPONSIBILITY NOR ANY OBLIGATION WHATSOEVER; AND THE FACT THAT THE GOVERNMENT MAY HAVE FORMULATED, FURNISHED, OR IN ANY WAY SUPPLIED THE SAID DRAWINGS, SPECIFICATIONS OR ANY OTHER DATA IS NOT TO BE REGARDED BY IMPLICATION OR OTHERWISE IN ANY MANNER LICENSING THE HOLDER OR ANY OTHER PERSONS OR CORPORATION, OR CONVEYING ANY RIGHTS OR PERMISSION TO MANUFACTURE, USE, OR SELL ANY PATENTED INVENTION THAT IN ANY WAY BE RELATED THERETO.

EAR 99 – NO LICENSE REQUIRED

The information contained in this document is technical in content, but not technical data as defined by the International Traffic in Arms (ITAR) or the Export Administration Regulations (EAR), and therefore is EAR 99 NLR, meaning that no license is required, suitable for public release. (General Prohibition Six (Embargo) applies to all items subject to the EAR, i.e. items on the CCL and within EAR 99 NLR. You may not make an export or reexport contrary to the provisions of part 746 (Embargos and Other Special Controls) of the EAR and 22 CFR part 126.1 of the ITAR).

EDDR # 113043 : NASA KSC Export Control Office (321- 867- 6039)

SPECIFIC NOTES:

A. CB-8, CB-9 & CB-10 ARE 15A MINIATURE CIRCUIT BREAKERS OF TYPE ALLEN BRADLEY P/N 1492-SP1C150. THESE BREAKERS HAVE A TYPE C TRIP CURVE.

B. CB-11 IS A 10A MINIATURE CIRCUIT BREAKER OF TYPE ALLEN BRADLEY P/N 1492-SP1B100. THIS BREAKER HAS A TYPE B TRIP CURVE.

C. ALL WIRING SHALL BE STRANDED COPPER WIRE.

D. TERMINAL BLOCK JUMPERS ARE 20 POLE CUT TO FIT BRIDGES OF TYPE PHOENIX CONTACT FBS20-6 P/N 3030365.

E. USE FERRULES TO TERMINATE ALL WIRES ON TERMINAL BLOCKS.

F. ONLY REPLACE CIRCUIT BREAKERS WITH SIMILAR TYPE & TRIP CURVE

G. SEE DRAWING E-2 FOR WIRE NUMBERING & TYPE SCHEDULE.

H. FIELD LOCATE ON EXIT END OF MPPU.

J. TMR-1 IS CONFIGURED FOR ON-DELAY WITH A DELAY TIME OF 5 SEC.

K. TMR-2 IS CONFIGURED FOR ON-DELAY WITH A DELAY TIME OF 10 SEC.

L. SEE DRAWING E-19 FOR VALVE 120VAC DISTRIBUTION ENCLOSURE LAYOUT.

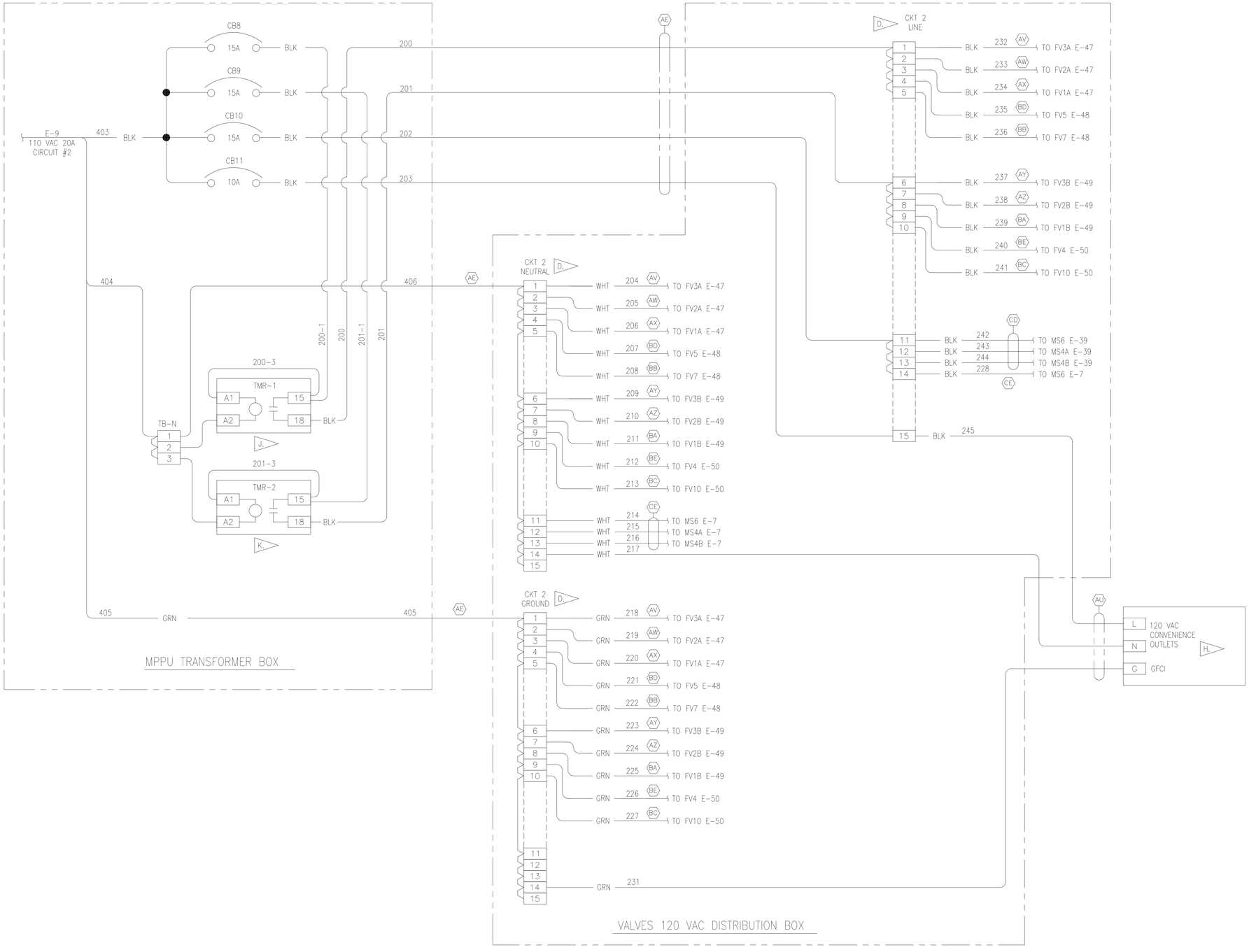

SYM	ZONE	DESCRIPTION	DATE	APPROVAL
		REVISIONS		

SIGNATURES		DATE
DRAFTER	T. JOBE	05/06/11
CHECKER	J. WHITEFORD	05/06/11
ENGINEER	S. RITTER	05/06/11
	R. WITHERSPOON	05/06/11
	R. FRANCO	05/06/11
SUBMITTED	T.O. ADAMS	05/06/11
APPROVED	E.A. THAXTON	05/06/11

NATIONAL AERONAUTICS AND SPACE ADMINISTRATION
JOHN F. KENNEDY SPACE CENTER, NASA
KENNEDY SPACE CENTER, FLORIDA

ASSEMBLY DRAWINGS
MPPU REFURBISHMENT DESIGN
ENVIRONMENTAL CONTROL SYSTEM
MPPU POWER WIRING
SHEET 2

SIZE F | DWG. NO. 584F0301001 | REV –

TITLE | PROJ. NO. 95255 | SHEET | OF

E-34

KSC FORM 1-11 (REV. 3/76) (C/G 3/93)

FOR ANY PURPOSE OTHER THAN IN CONNECTION WITH A DEFINITELY RELATED GOVERNMENT PROCUREMENT OPERATION, THE UNITED STATES GOVERNMENT THEREBY INCURS NO RESPONSIBILITY NOR ANY OBLIGATION WHATSOEVER; AND THE FACT THAT THE GOVERNMENT MAY HAVE FORMULATED, FURNISHED, OR IN ANY WAY SUPPLIED THE SAID DRAWINGS, SPECIFICATIONS OR ANY OTHER DATA IS NOT TO BE REGARDED BY IMPLICATION OR OTHERWISE IN ANY MANNER LICENSING THE HOLDER OR ANY OTHER PERSONS OR CORPORATION, OR CONVEYING ANY RIGHTS OR PERMISSION TO MANUFACTURE, USE, OR SELL ANY PATENTED INVENTION THAT IN ANY WAY BE RELATED THERETO.

EAR 99 – NO LICENSE REQUIRED

The Information contained in this document is technical in content, but not technical data as defined by the International Traffic in Arms (ITAR) or the Export Administration Regulations (EAR), and therefore is EAR 99 NLR, meaning that no export license is required, suitable for public release. (General Prohibition Six (Embargo) applies to all items subject to the EAR, i.e. items on the CCL and within EAR 99 NLR. You may not make an export or reexport contrary to the prohibitions of part 746 (Embargos and Other Special Controls) of the EAR and 22 CFR part 126.1 of the ITAR).

EDDR # 113043 : NASA KSC Export Control Office (321- 867-9209)

SPECIFIC NOTES:

A. CB-12 IS A 20A MINIATURE CIRCUIT BREAKER OF TYPE ALLEN BRADLEY P/N 1492-SP1C200. THIS BREAKER HAS A TYPE C TRIP CURVE.

B. ALL WIRING SHALL BE STRANDED COPPER WIRE.

C. TERMINAL BLOCK JUMPERS ARE 20 POLE CUT TO FIT BRIDGES OF TYPE PHOENIX CONTACT FBS20-6 P/N 3030365.

D. USE FERRULES TO TERMINATE ALL WIRES ON TERMINAL BLOCKS.

E. ONLY REPLACE CIRCUIT BREAKERS WITH SIMILAR TYPE & TRIP CURVE

F. SEE DRAWING E-2 FOR WIRE NUMBERING & TYPE SCHEDULE.

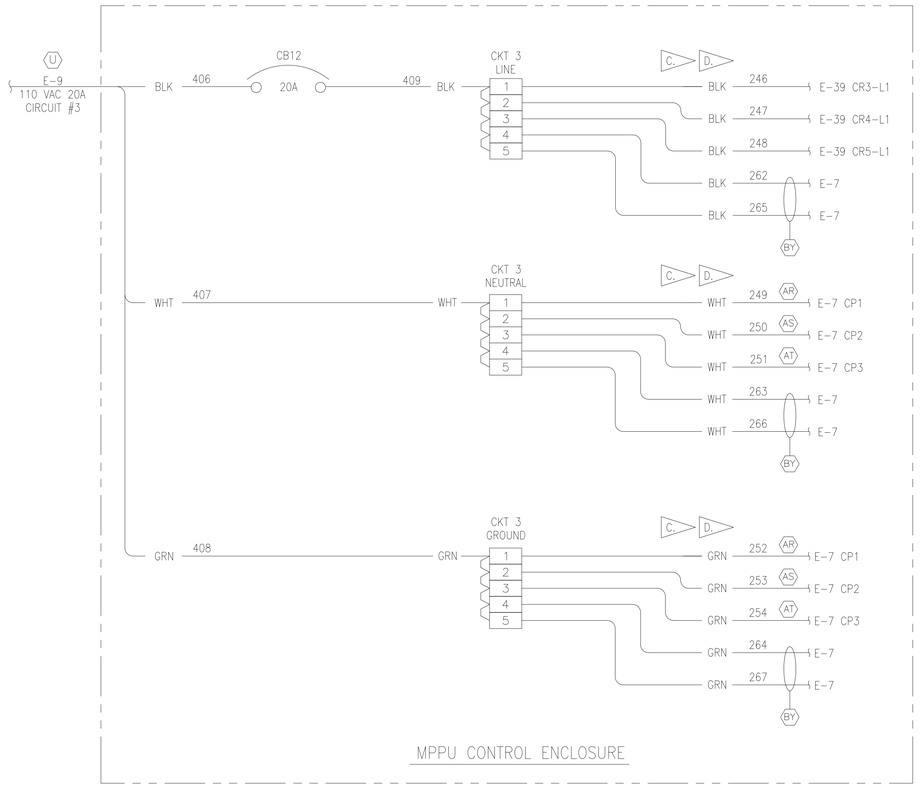

SYM	ZONE	DESCRIPTION	DATE	APPROVAL

REVISIONS

SIGNATURES		DATE
DRAFTER	T. JOBE	05/06/11
CHECKER	J. WHITEFORD	05/06/11
ENGINEER	S. RITTER	05/06/11
	R. WITHERSPOON	05/06/11
	R. FRANCO	05/06/11
SUBMITTED	T.O. ADAMS	05/06/11
APPROVED	E.A. THAXTON	05/06/11

NATIONAL AERONAUTICS AND SPACE ADMINISTRATION
JOHN F. KENNEDY SPACE CENTER, NASA
KENNEDY SPACE CENTER, FLORIDA

ASSEMBLY DRAWINGS

MPPU REFURBISHMENT DESIGN ENVIRONMENTAL CONTROL SYSTEM MPPU POWER WIRING SHEET 3

SIZE	DWG. NO.	REV
F	584F0301001	—

TITLE

PROJ. NO.	SHEET	OF
95255		

P:\95255\DRAWINGS\ELECT\E-35.DWG 03-MAR-2011 10:26 JOBETL

E-35

FOR ANY PURPOSE OTHER THAN IN CONNECTION WITH A DEFINITELY RELATED GOVERNMENT PROCUREMENT OPERATION, THE UNITED STATES GOVERNMENT THEREBY INCURS NO RESPONSIBILITY NOR ANY OBLIGATION WHATSOEVER; AND THE FACT THAT THE GOVERNMENT MAY HAVE FORMULATED, FURNISHED, OR IN ANY WAY SUPPLIED THE SAID DRAWINGS, SPECIFICATIONS OR ANY OTHER DATA IS NOT TO BE REGARDED BY IMPLICATION OR OTHERWISE IN ANY MANNER LICENSING THE HOLDER OR ANY OTHER PERSONS OR CORPORATION, OR CONVEYING ANY RIGHTS OR PERMISSION TO MANUFACTURE, USE, OR SELL ANY PATENTED INVENTION THAT IN ANY WAY BE RELATED THERETO.

EAR 99 – NO LICENSE REQUIRED

The Information contained in this document is technical in content, but not technical data as defined by the International Traffic in Arms (ITAR) or the Export Administration Regulations (EAR), and therefore is EAR 99 NLR, meaning no license required, suitable for public release. (General Prohibition Six (Embargo) applies to all items subject to the EAR, i.e. items on the CCL and within EAR 99 NLR. You may not make an export or reexport contrary to the prohibitions of part 746 (Embargos and Other Special Controls) of the EAR and 22 CFR part 126.1 of the ITAR).

EDDR # 113043 : NASA KSC Export Control Office (321- 867- 6039)

SPECIFIC NOTES:

A. USE FERRULES TO TERMINATE ALL WIRES ON TERMINAL BLOCKS.

B. FOR THE THERMO-ELECTRIC AIR CONDITIONER THE COOLING TEMPERATURE (T2) IS SET TO 95°F. THE HEATING TEMPERATURE (T1) IS SET TO 50°F.

C. TERMINAL BLOCK JUMPERS ARE 20 POLE CUT TO FIT BRIDGES OF TYPE PHOENIX CONTACT FB920-5 P/N 3030226.

D. ALL WIRING SHALL BE STRANDED COPPER WIRE.

E. CB-21 IS A 6A THERMAL MAGNETIC CIRCUIT BREAKER OF TYPE PHOENIX CONTACT TCP6A P/N 0712275.

F. SEE DRAWING E-2 FOR WIRE NUMBERING & TYPE SCHEDULE.

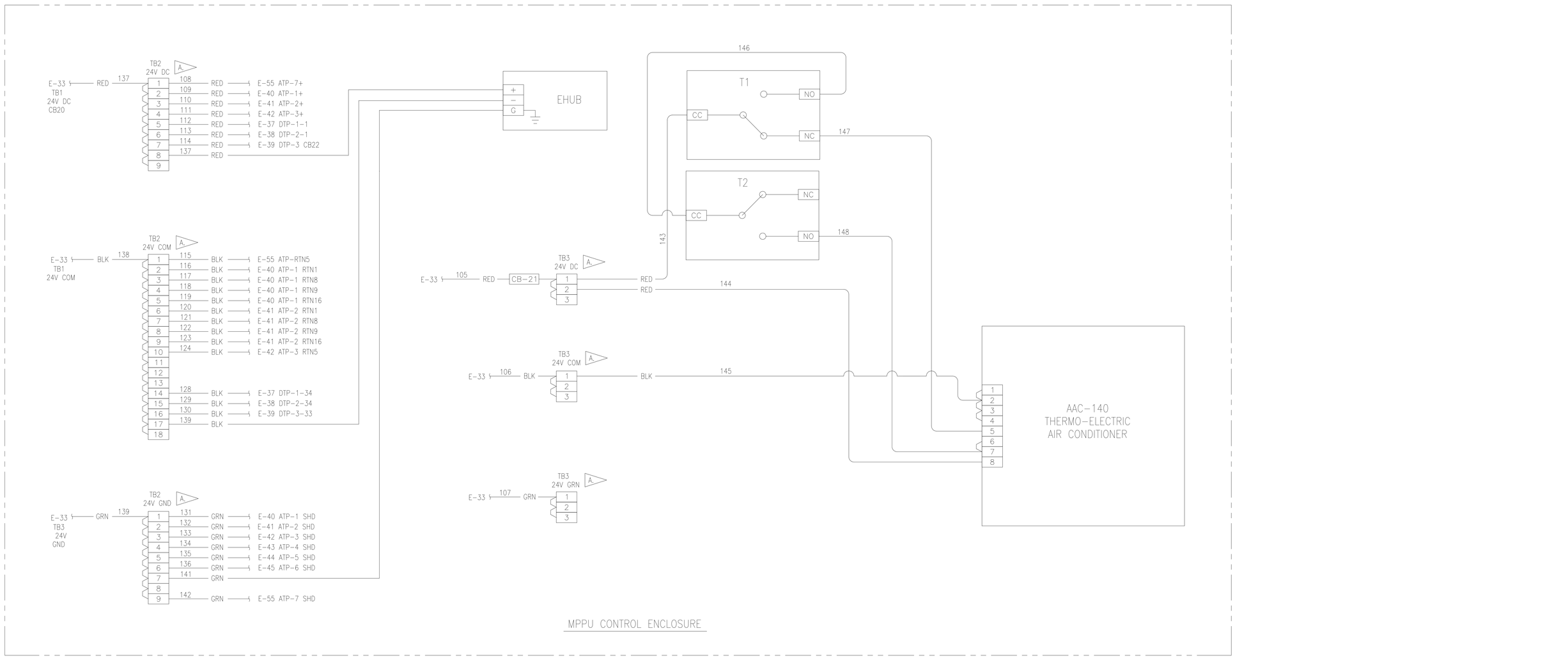

SYM	ZONE	DESCRIPTION	DATE	APPROVAL
REVISIONS				

SIGNATURES		DATE
DRAFTER	T. JOBE	05/06/11
CHECKER	J. WHITEFORD	05/06/11
ENGINEER	S. RITTER	05/06/11
	R. WITHERSPOON	05/06/11
	R. FRANCO	05/06/11
SUBMITTED	T.O. ADAMS	05/06/11
APPROVED	E.A. THAXTON	05/06/11

NATIONAL AERONAUTICS AND SPACE ADMINISTRATION
JOHN F. KENNEDY SPACE CENTER, NASA
KENNEDY SPACE CENTER, FLORIDA

ASSEMBLY DRAWINGS
MPPU REFURBISHMENT DESIGN
ENVIRONMENTAL CONTROL SYSTEM
MPPU POWER WIRING
SHEET 4

SIZE F | DWG. NO. 584F0301001 | REV –

TITLE | PROJ. NO. 95255 | SHEET | OF

E-36

KSC FORM 1-11 (REV. 3/76) (C/G 3/93)

FOR ANY PURPOSE OTHER THAN IN CONNECTION WITH A DEFINITELY RELATED GOVERNMENT PROCUREMENT OPERATION, THE UNITED STATES GOVERNMENT THEREBY INCURS NO RESPONSIBILITY NOR ANY OBLIGATION WHATSOEVER; AND THE FACT THAT THE GOVERNMENT MAY HAVE FORMULATED, FURNISHED, OR IN ANY WAY SUPPLIED THE SAID DRAWINGS, SPECIFICATIONS OR ANY OTHER DATA IS NOT TO BE REGARDED BY IMPLICATION OR OTHERWISE IN ANY MANNER LICENSING THE HOLDER OR ANY OTHER PERSONS OR CORPORATION, OR CONVEYING ANY RIGHTS OR PERMISSION TO MANUFACTURE, USE, OR SELL ANY PATENTED INVENTION THAT IN ANY WAY BE RELATED THERETO.

EAR 99 – NO LICENSE REQUIRED

The information contained in this document is technical/dri content, but not technical data as defined by the International Traffic in Arms (ITAR) or the Export Administration Regulations (EAR), and therefore is EAR 99 NLR, meaning no license required, suitable for public release. (General Prohibition Six (Embargo) applies to all items subject to the EAR, i.e. items on the CCL and within EAR 99 NLR. You may not make an export or reexport contrary to the provisions of part 746 (Embargos and Other Special Controls) of the EAR and 22 CFR part 126.1 of the ITAR).

EDDR # 113043 : NASA KSC Export Control Office (321-867-6039)

EAR 99

SPECIFIC NOTES:

A. TERMINAL BLOCK FUSES ARE 500 MA & ARE OF TYPE BUSSMANN P/N GMA500MA OR EQUAL.

B. REMOVABLE TERMINAL BLOCK HOUSING FOR PLC CARD IS OF TYPE ALLEN BRADLEY P/N 1756-TBCH.

C. TERMINAL BLOCK JUMPERS ARE OF TYPE RELIANCE P/N 97739201.

D. DTP-1 JUMPERS ARE 20 POLE CUT TO FIT BRIDGES OF TYPE FBS20-5 PN/3030226.

E. TERMINALS JUMPERED INTERNALLY.

F. UNLESS OTHERWISE SPECIFIED USE 16AWG STRANDED COPPER WIRE.

G. USE FERRULES TO TERMINATE ALL WIRES ON DTP-1.

H. SEE DRAWING E-2 FOR WIRE NUMBERING & TYPE SCHEDULE.

J. SEE DRAWING M9A FOR FLOW SWITCH FS-1 AND FS-2 LOCATION.

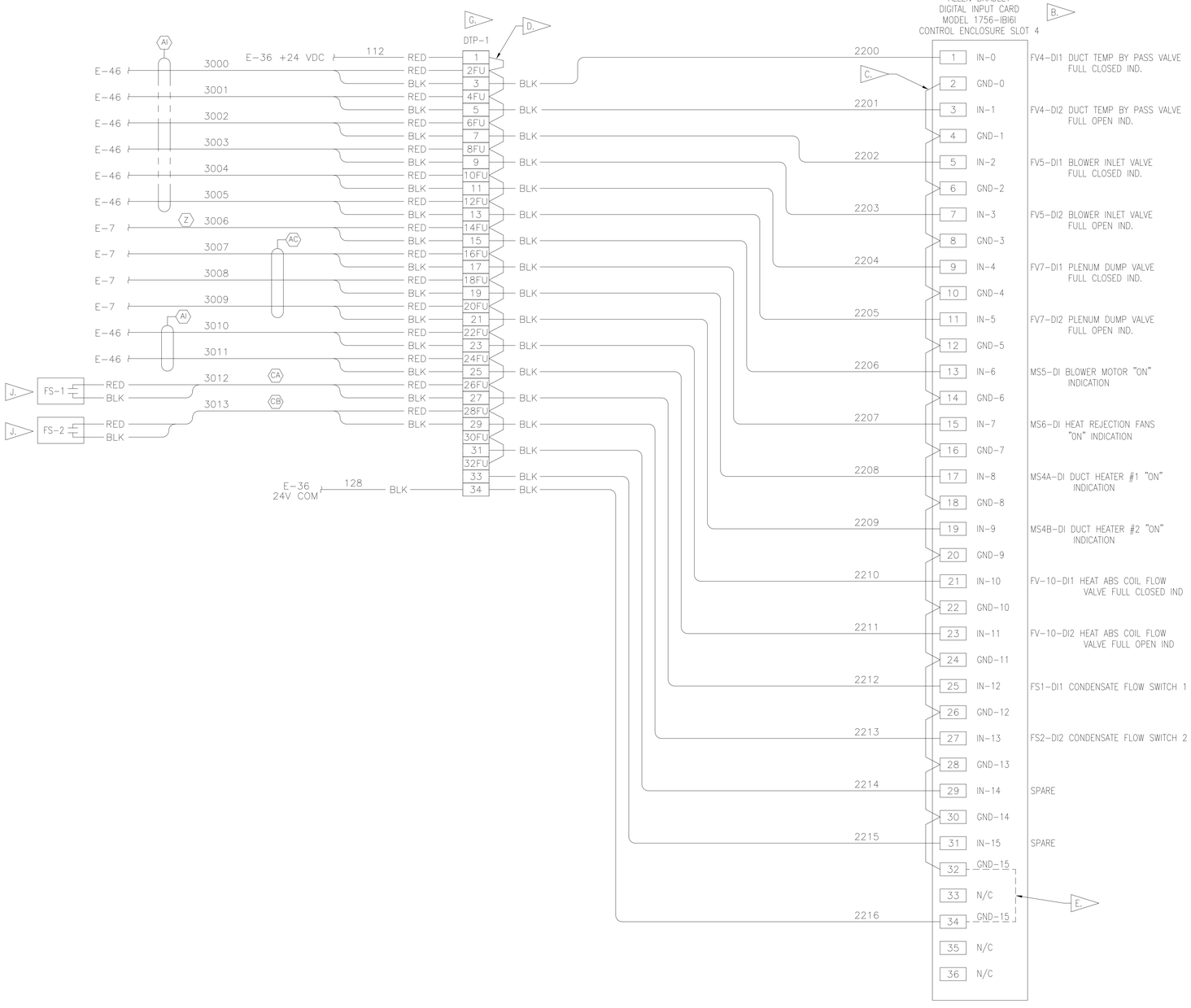

SYM	ZONE	DESCRIPTION	DATE	APPROVAL
		REVISIONS		

SIGNATURES		DATE
DRAFTER	T. JOBE	05/06/11
CHECKER	J. WHITEFORD	05/06/11
ENGINEER	S. RITTER	05/06/11
	R. WITHERSPOON	05/06/11
	R. FRANCO	05/06/11
SUBMITTED	T.O. ADAMS	05/06/11
APPROVED	E.A. THAXTON	05/06/11

NATIONAL AERONAUTICS AND SPACE ADMINISTRATION
JOHN F. KENNEDY SPACE CENTER, NASA
KENNEDY SPACE CENTER, FLORIDA

ASSEMBLY DRAWINGS

MPPU REFURBISHMENT DESIGN ENVIRONMENTAL CONTROL SYSTEM PLC WIRING DIAGRAM – SLOT 4

TITLE

SIZE F | DWG. NO. 584F0301001 | REV –

PROJ. NO. 95255 | SHEET | OF

P:\95255\DRAWINGS\ELECT\E-37.DWG 02-FEB-2011 12:39 JOBETL

E-37

KSC FORM 1-11 (REV. 3/76) (C/G 3/93)

EAR 99

FOR ANY PURPOSE OTHER THAN IN CONNECTION WITH A DEFINITELY RELATED GOVERNMENT PROCUREMENT OPERATION, THE UNITED STATES GOVERNMENT THEREBY INCURS NO RESPONSIBILITY NOR ANY OBLIGATION WHATSOEVER; AND THE FACT THAT THE GOVERNMENT MAY HAVE FORMULATED, FURNISHED, OR IN ANY WAY SUPPLIED THE SAID DRAWINGS, SPECIFICATIONS OR ANY OTHER DATA IS NOT TO BE REGARDED BY IMPLICATION OR OTHERWISE IN ANY MANNER LICENSING THE HOLDER OR ANY OTHER PERSONS OR CORPORATION, OR CONVEYING ANY RIGHTS OR PERMISSION TO MANUFACTURE, USE, OR SELL ANY PATENTED INVENTION THAT IN ANY WAY BE RELATED THERETO.

EAR 99 – NO LICENSE REQUIRED

The Information contained in this document is technical/dn content, but not technical data as defined by the International Traffic in Arms (ITAR) or the Export Administration Regulations (EAR), and therefore is EAR 99 NLR, meaning no license required, suitable for public release. (General Prohibition Six (Embargo) applies to all items subject to the EAR, i.e. items on the CCL and within EAR 99 NLR. You may not make an export or reexport contrary to the provisions of part 746 (Embargos and Other Special Controls) of the EAR and 22 CFR part 126.1 of the ITAR).

EDDR # 113043 : NASA KSC Export Control Office (321-867-9209)

EAR 99

SPECIFIC NOTES:

A. TERMINAL BLOCK FUSES ARE 500 MA & ARE OF TYPE BUSSMANN P/N GMA500MA OR EQUAL.

B. REMOVABLE TERMINAL BLOCK HOUSING FOR PLC CARD IS OF TYPE ALLEN BRADLEY P/N 1756-TBCH.

C. TERMINAL BLOCK JUMPERS ARE OF TYPE RELIANCE P/N 97739201.

D. DTP-2 JUMPERS ARE 20 POLE CUT TO FIT BRIDGES OF TYPE FBS20-5 PN/3030226.

E. TERMINALS JUMPERED INTERNALLY.

F. UNLESS OTHERWISE SPECIFIED USE 16AWG STRANDED COPPER WIRE.

G. USE FERRULES TO TERMINATE ALL WIRES ON DTP-2.

H. SEE DRAWING E-2 FOR WIRE NUMBERING & TYPE SCHEDULE.

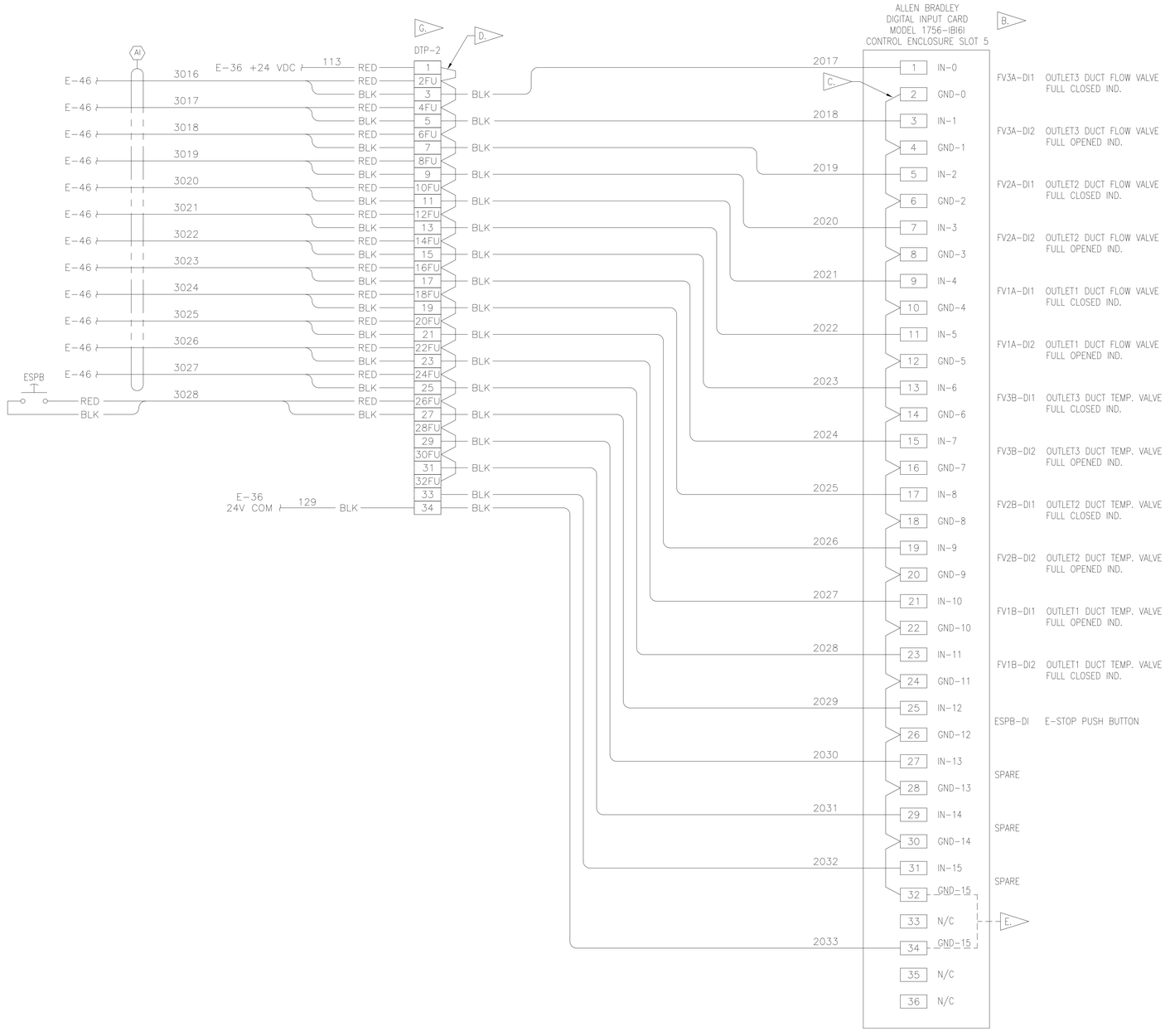

SYM	ZONE	DESCRIPTION	DATE	APPROVAL
		REVISIONS		

SIGNATURES		DATE
DRAFTER	T. JOBE	05/06/11
CHECKER	J. WHITEFORD	05/06/11
ENGINEER	S. RITTER	05/06/11
	R. WITHERSPOON	05/06/11
	R. FRANCO	05/06/11
SUBMITTED	T.O. ADAMS	05/06/11
APPROVED	E.A. THAXTON	DATE 05/06/11

NATIONAL AERONAUTICS AND SPACE ADMINISTRATION
JOHN F. KENNEDY SPACE CENTER, NASA
KENNEDY SPACE CENTER, FLORIDA

ASSEMBLY DRAWINGS

MPPU REFURBISHMENT DESIGN ENVIRONMENTAL CONTROL SYSTEM PLC WIRING DIAGRAM – SLOT 5

SIZE F | DWG. NO. 584F0301001 | REV –

TITLE | PROJ. NO. 95255 | SHEET | OF

E-38

FOR ANY PURPOSE OTHER THAN IN CONNECTION WITH A DEFINITELY RELATED GOVERNMENT PROCUREMENT OPERATION, THE UNITED STATES GOVERNMENT THEREBY INCURS NO RESPONSIBILITY NOR ANY OBLIGATION WHATSOEVER; AND THE FACT THAT THE GOVERNMENT MAY HAVE FORMULATED, FURNISHED, OR IN ANY WAY SUPPLIED THE SAID DRAWINGS, SPECIFICATIONS OR ANY OTHER DATA IS NOT TO BE REGARDED BY IMPLICATION OR OTHERWISE IN ANY MANNER LICENSING THE HOLDER OR ANY OTHER PERSONS OR CORPORATION, OR CONVEYING ANY RIGHTS OR PERMISSION TO MANUFACTURE, USE, OR SELL ANY PATENTED INVENTION THAT IN ANY WAY BE RELATED THERETO.

EAR 99 – NO LICENSE REQUIRED

The information contained in this document is technical in content, but not technical data as defined by the International Traffic in Arms (ITAR) or the Export Administration Regulations (EAR), and therefore is EAR 99 NLR, meaning that it is non-regulated, publicly available for public release. (General Prohibition Six (Embargo) applies to all items subject to the EAR, i.e. items on the CCL and within EAR 99 NLR. You may not make an export or reexport contrary to the provisions of part 746 (Embargos and Other Special Controls) of the EAR and 22 CFR part 126.1 of the ITAR).

EDDR # 113043 : NASA KSC Export Control Office (321- 867-9209)

EAR 99

ALLEN BRADLEY
CONTACT OUT CARD
MODEL 1756-OW16I
CONTROL ENCLOSURE SLOT 6

BLOWER MOTOR "ON" CMD	MS5-00	OUT-0	1
		LI-0	2
HEAT REJECTION FANS "ON" CMD	MS6-00	OUT-1	3
		LI-1	4
CHILLER "ON" CMD	CH1-DO	OUT-2	5
		LI-2	6
DUCT HEATER #1 "ENABLE" CMD	MS4A-DO	OUT-3	7
		LI-3	8
DUCT HEATER #2 "ENABLE" CMD	MS4B-DO	OUT-4	9
		LI-4	10
PLENUM REHEAT PUMP "ON" CMD	CP1-DO	OUT-5	11
		LI-5	12
PRECOOL/REHEAT CIRC PUMP "ON" CMD	CP2-DO	OUT-6	13
		LI-6	14
HEAT RE-INJECTION CIRC PUMP "ON" CMD	CP3-DO	OUT-7	15
		LI-7	16
DUCT HEATER #1 "ON" CMD	SCR4A-DO	OUT-8	17
		LI-8	18
DUCT HEATER #2 "ON" CMD	SCR4B-DO	OUT-9	19
		LI-9	20
SPARE		OUT-10	21
		LI-10	22
SPARE		OUT-11	23
		LI-11	24
SPARE		OUT-12	25
		LI-12	26
SPARE		OUT-13	27
		LI-13	28
SPARE		OUT-14	29
		LI-14	30
SPARE		OUT-15	31
		LI-15	32
		N/C	33
		LI-15	34
		N/C	35
		N/C	36

C.

2034 2035 2036 2037 2038 2039 2040 2041 2042 2043 2044 2045 2046 2047 2048 2049 2050

DTP-3

RED	1FU	RED	3016
	2	BLK	
RED	3FU	RED	3017
	4	BLK	
RED	5FU	RED	3018
	6	BLK	
RED	7FU	RED	3019
	8	BLK	
RED	9FU	RED	3020
	10	BLK	
RED	11FU	RED	3021
	12	BLK	
RED	13FU	RED	3022
	14	BLK	
RED	15FU	RED	3023
	16	BLK	
RED	17FU	RED	3024 — E-7 (AD)
	18	BLK	
RED	19FU	RED	3025 — E-7 (AD)
	20	BLK	
RED	21FU		
	22		
RED	23FU		
	24		
RED	25FU		
	26		
RED	27FU		
	28		
RED	29FU		
	30		
RED	31FU		
	32		
	33	BLK	130 — E-36 24V COM

RED — CB22 — BLK — 114 — E-36 +24VDC

G.

D1 — A1 13 / K1 / A2 14 — 1 9 5 4 12 8 — 255 (Z) E-7; 228 E-7

D2 — A1 13 / K2 / A2 14 — 1 9 5 4 12 8 — 242 (CD) E-34 CKT2 LINE-11; 256 (AC) E-7

D3 — A1 13 / K3 / A2 14 — 1 9 5 4 12 8 — 220 (BZ) TB14-1 E-7; 221 TB14-2 E-7; 283 TB14-3 E-7; 284 TB14-4 E-7

D4 — A1 13 / K4 / A2 14 — 1 9 5 4 12 8 — 243 (CD) E-34 CKT2 LINE-12; 257 (AC) E-7

D5 — A1 13 / K5 / A2 14 — 1 9 5 4 12 8 — 244 (CD) E-34 CKT2 LINE-13; 258 (AC) E-7

246 E-35 CKT3 LINE-1

D6 — CR3 — RED / BLK — A1 13 L1 L2 L3 / A2 14 T1 T2 T3 — 259 (AR) E-7 CP1

247 E-35 CKT3 LINE-2

D7 — CR4 — RED / BLK — A1 13 L1 L2 L3 / A2 14 T1 T2 T3 — 260 (AS) E-7 CP2

248 E-35 CKT3 LINE-3

D8 — CR5 — RED / BLK — A1 13 L1 L2 L3 / A2 14 T1 T2 T3 — 261 (AT) E-7 CP3

SPECIFIC NOTES:

A. TERMINAL BLOCK FUSES ARE 500 MA & ARE OF TYPE BUSSMANN P/N GMA500MA OR EQUAL.

B. REMOVABLE TERMINAL BLOCK HOUSING FOR PLC CARD IS TYPE ALLEN BRADLEY P/N 1756-TBCH.

C. TERMINALS JUMPERED INTERNALLY.

D. SELECT APPROPRIATE SNUBBER DIODES FOR D1 THRU D5.

E. SELECT APPROPRIATE SNUBBER DIODES FOR D6 THRU D8.

F. SEE DRAWING E-2 FOR WIRE NUMBERING & TYPE SCHEDULE.

G. USE FERRULES TO TERMINATE ALL WIRES ON DTP-3.

SYM	ZONE	DESCRIPTION	DATE	APPROVAL
		REVISIONS		

SIGNATURES		DATE
DRAFTER	T. JOBE	05/06/11
CHECKER	J. WHITEFORD	05/06/11
ENGINEER	S. RITTER	05/06/11
	R. WITHERSPOON	05/06/11
	R. FRANCO	05/06/11
SUBMITTED	T.O. ADAMS	05/06/11
APPROVED	E.A. THAXTON	05/06/11

NATIONAL AERONAUTICS AND SPACE ADMINISTRATION
JOHN F. KENNEDY SPACE CENTER, NASA
KENNEDY SPACE CENTER, FLORIDA

ASSEMBLY DRAWINGS

MPPU REFURBISHMENT DESIGN ENVIRONMENTAL CONTROL SYSTEM PLC WIRING DIAGRAM – SLOT 6

SIZE F | DWG. NO. 584F0301001 | REV —

PROJ. NO. 95255 | SHEET | OF

TITLE

E-39

EAR 99

FOR ANY PURPOSE OTHER THAN IN CONNECTION WITH A DEFINITELY RELATED GOVERNMENT PROCUREMENT OPERATION, THE UNITED STATES GOVERNMENT THEREBY INCURS NO RESPONSIBILITY NOR ANY OBLIGATION WHATSOEVER; AND THE FACT THAT THE GOVERNMENT MAY HAVE FORMULATED, FURNISHED, OR IN ANY WAY SUPPLIED THE SAID DRAWINGS, SPECIFICATIONS OR ANY OTHER DATA IS NOT TO BE REGARDED BY IMPLICATION OR OTHERWISE IN ANY MANNER LICENSING THE HOLDER OR ANY OTHER PERSONS OR CORPORATION, OR CONVEYING ANY RIGHTS OR PERMISSION TO MANUFACTURE, USE, OR SELL ANY PATENTED INVENTION THAT IN ANY WAY BE RELATED THERETO.

EAR 99 – NO LICENSE REQUIRED

The information contained in this document is technical in content, but not technical data as defined by the International Traffic in Arms (ITAR) or the Export Administration Regulations (EAR), and therefore is EAR 99 N.L.R. material and is not regulated, suitable for public release. (General Prohibition Six (Embargo) applies to all items subject to the EAR, i.e. items on the CCL and within EAR 99 N.L.R.. You may not make an export or reexport contrary to the prohibitions of part 746 (Embargos and Other Special Controls) of the EAR and 22 CFR part 126.1 of the ITAR).

EDDR # 113043 : NASA KSC Export Control Office (321- 867-9209)

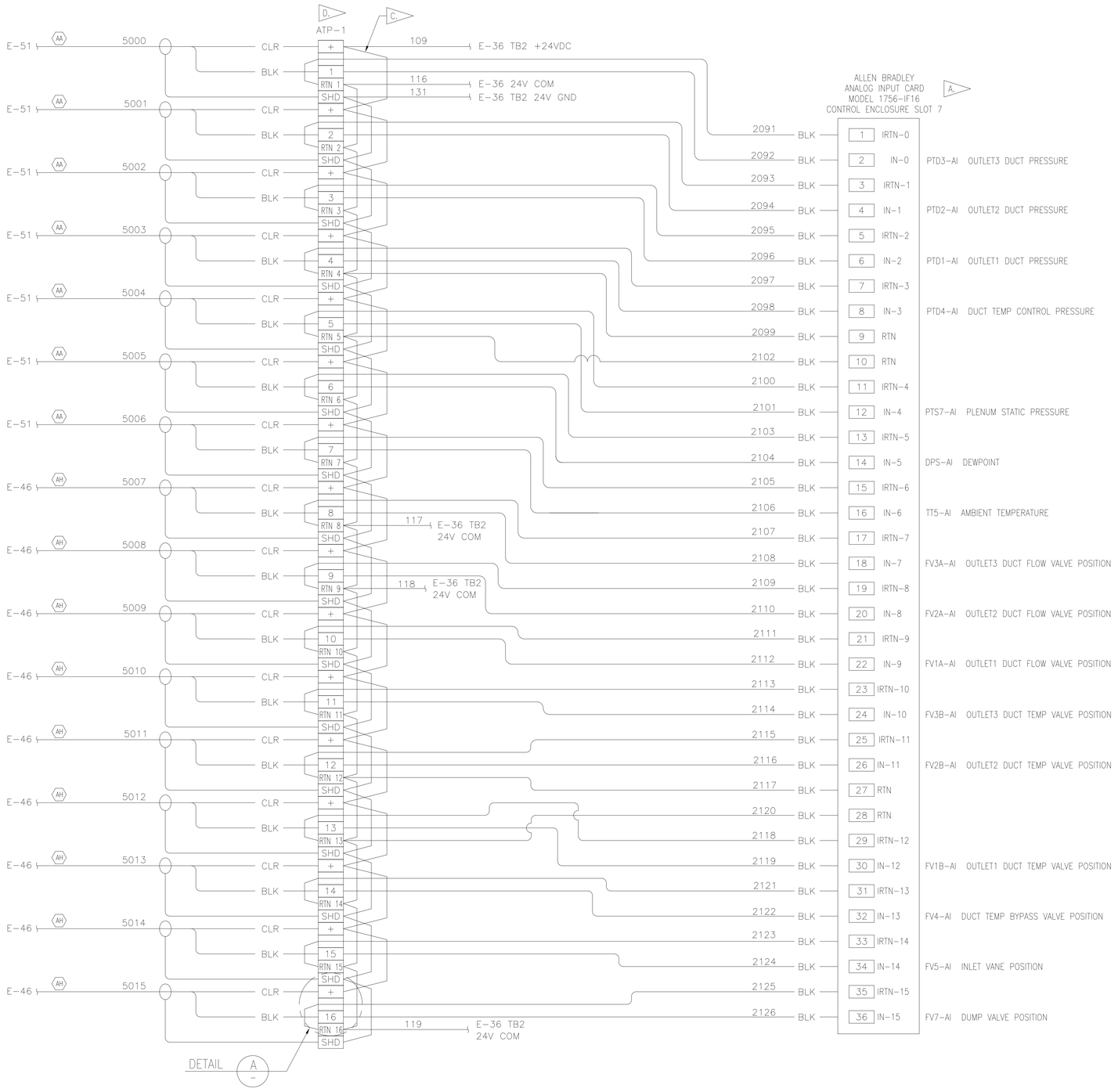

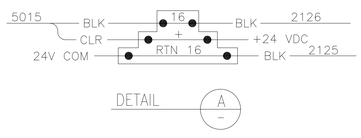

SPECIFIC NOTES:

A. REMOVABLE TERMINAL BLOCK HOUSING FOR PLC CARD IS OF TYPE ALLEN BRADLEY P/N 1756-TBCH.

B. ALL INPUT CHANNELS ARE WIRED FOR 0-20 MA INPUT SIGNALS.

C. ATP-1 JUMPERS ARE 20 POLE CUT TO FIT BRIDGES OF TYPE PHOENIX CONTACT FBS20-5 P/N 3030226.

D. USE FERRULES TO TERMINATE ALL WIRES TO ATP-1.

E. UNLESS OTHERWISE SPECIFIED USE 16AWG STRANDED WIRE.

F. SEE DRAWING E-2 FOR WIRE NUMBERING & TYPE SCHEDULE.

SYM	ZONE	DESCRIPTION	DATE	APPROVAL
		REVISIONS		

SIGNATURES		DATE
DRAFTER	T. JOBE	05/06/11
CHECKER	J. WHITEFORD	05/06/11
ENGINEER	S. RITTER	05/06/11
	R. WITHERSPOON	05/06/11
	R. FRANCO	05/06/11
SUBMITTED	T.O. ADAMS	05/06/11
APPROVED	E.A. THAXTON	05/06/11

NATIONAL AERONAUTICS AND SPACE ADMINISTRATION
JOHN F. KENNEDY SPACE CENTER, NASA
KENNEDY SPACE CENTER, FLORIDA

ASSEMBLY DRAWINGS

MPPU REFURBISHMENT DESIGN ENVIRONMENTAL CONTROL SYSTEM PLC WIRING DIAGRAM – SLOT 7

TITLE

SIZE F | DWG. NO. 584F0301001 | REV –

PROJ. NO. 95255 | SHEET OF

E-40

P:\95255\DRAWINGS\ELECT\E-40.DWG 15-FEB-2011 14:49 JOBETL

KSC FORM 1-11 (REV. 3/76) (C/G 3/93)

FOR ANY PURPOSE OTHER THAN IN CONNECTION WITH A DEFINITELY RELATED GOVERNMENT PROCUREMENT OPERATION, THE UNITED STATES GOVERNMENT THEREBY INCURS NO RESPONSIBILITY NOR ANY OBLIGATION WHATSOEVER; AND THE FACT THAT THE GOVERNMENT MAY HAVE FORMULATED, FURNISHED, OR IN ANY WAY SUPPLIED THE SAID DRAWINGS, SPECIFICATIONS OR ANY OTHER DATA IS NOT TO BE REGARDED BY IMPLICATION OR OTHERWISE IN ANY MANNER LICENSING THE HOLDER OR ANY OTHER PERSONS OR CORPORATION, OR CONVEYING ANY RIGHTS OR PERMISSION TO MANUFACTURE, USE, OR SELL ANY PATENTED INVENTION THAT IN ANY WAY BE RELATED THERETO.

EAR 99 – NO LICENSE REQUIRED

The information contained in this document is technical in content, but not technical data as defined by the International Traffic in Arms (ITAR) or the Export Administration Regulations (EAR), and therefore is EAR 99 NLR, meaning no license required, suitable for public release. (General Prohibition Six (Embargo) applies to all items subject to the EAR, i.e. items on the CCL and within EAR 99 NLR. You may not make an export or reexport contrary to the provisions of part 746 (Embargos and Other Special Controls) of the EAR and 22 CFR part 126.1 of the ITAR).

EDDR # 113043 : NASA KSC Export Control Office (321- 867-9209)

EAR 99

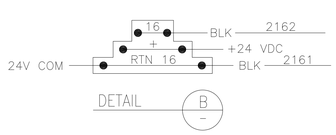

SPECIFIC NOTES:

A. REMOVABLE TERMINAL BLOCK HOUSING FOR PLC CARD IS OF TYPE ALLEN BRADLEY P/N 1756-TBCH.

B. ALL INPUT CHANNELS ARE WIRED FOR 0-20 MA INPUT SIGNALS.

C. ATP-2 JUMPERS ARE 20 POLE CUT TO FIT BRIDGES OF TYPE PHOENIX CONTACT FBS20-5 P/N 3030226.

D. USE FERRULES TO TERMINATE ALL WIRES TO ATP-2.

E. UNLESS OTHERWISE SPECIFIED USE 16AWG STRANDED COPPER WIRE.

F. SEE DRAWING E-2 FOR WIRE NUMBERING & TYPE SCHEDULE.

SYM	ZONE	DESCRIPTION	DATE	APPROVAL
REVISIONS				

SIGNATURES		DATE
DRAFTER	T. JOBE	05/06/11
CHECKER	J. WHITEFORD	05/06/11
ENGINEER	S. RITTER	05/06/11
	R. WITHERSPOON	05/06/11
	R. FRANCO	05/06/11
SUBMITTED	T.O. ADAMS	05/06/11
APPROVED	E.A. THAXTON	05/06/11

NATIONAL AERONAUTICS AND SPACE ADMINISTRATION
JOHN F. KENNEDY SPACE CENTER, NASA
KENNEDY SPACE CENTER, FLORIDA

ASSEMBLY DRAWINGS

MPPU REFURBISHMENT DESIGN
ENVIRONMENTAL CONTROL SYSTEM
PLC WIRING DIAGRAM – SLOT 8

SIZE F | DWG. NO. 584F0301001 | REV —

TITLE | PROJ. NO. 95255 | SHEET | OF

P:\95255\DRAWINGS\ELECT\E-41.DWG 15-FEB-2011 14:54 JOBITL

E-41

FOR ANY PURPOSE OTHER THAN IN CONNECTION WITH A DEFINITELY RELATED GOVERNMENT PROCUREMENT OPERATION, THE UNITED STATES GOVERNMENT THEREBY INCURS NO RESPONSIBILITY NOR ANY OBLIGATION WHATSOEVER; AND THE FACT THAT THE GOVERNMENT MAY HAVE FORMULATED, FURNISHED, OR IN ANY WAY SUPPLIED THE SAID DRAWINGS, SPECIFICATIONS OR ANY OTHER DATA IS NOT TO BE REGARDED BY IMPLICATION OR OTHERWISE IN ANY MANNER LICENSING THE HOLDER OR ANY OTHER PERSONS OR CORPORATION, OR CONVEYING ANY RIGHTS OR PERMISSION TO MANUFACTURE, USE, OR SELL ANY PATENTED INVENTION THAT IN ANY WAY BE RELATED THERETO.

EAR 99 – NO LICENSE REQUIRED

The Information contained in this document is technical in content, but not technical data as defined by the International Traffic in Arms (ITAR) or the Export Administration Regulations (EAR), and therefore is EAR 99 NLR, meaning no license required, suitable for public release. (General Prohibition Six (Embargo) applies to all items subject to the EAR, i.e. items on the CCL and within EAR 99 NLR. You may not make an export or reexport contrary to the provisions of part 746 (Embargos and Other Special Controls) of the EAR and 22 CFR part 126.1 of the ITAR).

EDDR # 113043 : NASA KSC Export Control Office (321- 867-9209)

EAR 99

SPECIFIC NOTES:

A. REMOVABLE TERMINAL BLOCK HOUSING FOR PLC CARD IS OF TYPE ALLEN BRADLEY P/N 1756-TBNH.

B. ALL INPUT CHANNELS ARE WIRED FOR 0-20 MA INPUT SIGNALS.

C. ATP-3 JUMPERS ARE 20 POLE CUT TO FIT BRIDGES OF TYPE PHOENIX CONTACT FBS20-5 P/N 3030226.

D. USE FERRULES TO TERMINATE ALL WIRES TO ATP-3.

E. UNLESS OTHERWISE SPECIFIED USE 16AWG STRANDED WIRE.

F. SEE DRAWING E-2 FOR WIRE NUMBERING & TYPE SCHEDULE.

G. THIS AI CARD SHALL BE USED BY KSC FOR FUTURE EXTERNAL INTERFACE. THIS CARD SHALL NOT BE USED BY SUBCONTRACTOR FOR LOCAL CONTROL.

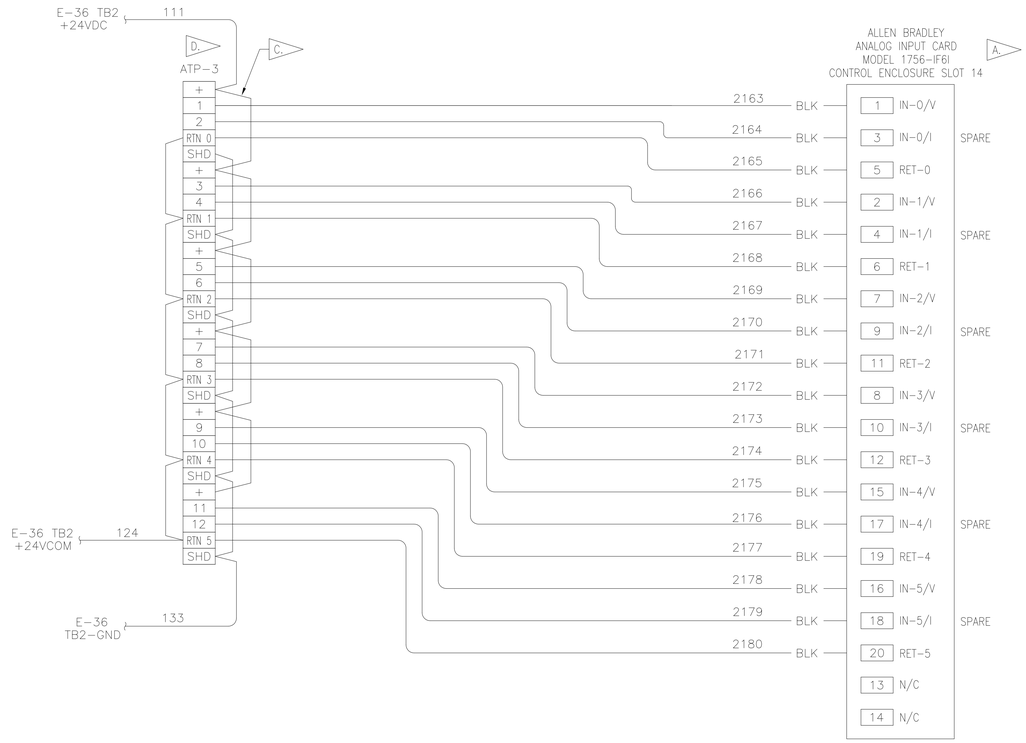

SYM	ZONE	DESCRIPTION	DATE	APPROVAL
		REVISIONS		

SIGNATURES		DATE
DRAFTER	T. JOBE	05/06/11
CHECKER	J. WHITEFORD	05/06/11
ENGINEER	S. RITTER	05/06/11
	R. WITHERSPOON	05/06/11
	R. FRANCO	05/06/11
SUBMITTED	T.O. ADAMS	05/06/11
APPROVED	E.A. THAXTON	05/06/11
TITLE		

NATIONAL AERONAUTICS AND SPACE ADMINISTRATION
JOHN F. KENNEDY SPACE CENTER, NASA
KENNEDY SPACE CENTER, FLORIDA

ASSEMBLY DRAWINGS

MPPU REFURBISHMENT DESIGN
ENVIRONMENTAL CONTROL SYSTEM
PLC WIRING DIAGRAM – SLOT 14

SIZE	DWG. NO.	REV
F	584F0301001	–
PROJ. NO. 95255	SHEET	OF

E-42

KSC FORM 1-11 (REV. 3/76) (C/G 3/93)

EAR 99

FOR ANY PURPOSE OTHER THAN IN CONNECTION WITH A DEFINITELY RELATED GOVERNMENT PROCUREMENT OPERATION, THE UNITED STATES GOVERNMENT THEREBY INCURS NO RESPONSIBILITY NOR ANY OBLIGATION WHATSOEVER; AND THE FACT THAT THE GOVERNMENT MAY HAVE FORMULATED, FURNISHED, OR IN ANY WAY SUPPLIED THE SAID DRAWINGS, SPECIFICATIONS OR ANY OTHER DATA IS NOT TO BE REGARDED BY IMPLICATION OR OTHERWISE IN ANY MANNER LICENSING THE HOLDER OR ANY OTHER PERSONS OR CORPORATION, OR CONVEYING ANY RIGHTS OR PERMISSION TO MANUFACTURE, USE, OR SELL ANY PATENTED INVENTION THAT IN ANY WAY BE RELATED THERETO.

EAR 99 – NO LICENSE REQUIRED

The information contained in this document is technical/scientific content, but not technical data as defined by the International Traffic in Arms (ITAR) or the Export Administration Regulations (EAR), and therefore is EAR 99 NLR, meaning no license required, suitable for public release. (General Prohibition Six (Embargo) applies to all items subject to the EAR, i.e. items on the CCL and within EAR 99 NLR. You may not make an export or reexport contrary to the prohibitions of part 746 (Embargos and Other Special Controls) of the EAR and 22 CFR part 126.1 of the ITAR).

EDDR # 113043 : NASA KSC Export Control Office (321-867-6039)

EAR 99

SPECIFIC NOTES:

A. UNLESS OTHERWISE SPECIFIED ALL CABLE IS OF TYPE T THERMOCOUPLE HOOK-UP CABLE W/SHIELD.

B. DO NOT USE FERRULES WHEN CONNECTING WIRES TO ATP-4.

C. REMOVABLE TERMINAL BLOCK HOUSING FOR PLC CARD IS OF TYPE ALLEN BRADLEY P/N 1756-TBNH.

D. SEE DRAWING E-2 FOR WIRE NUMBERING & TYPE SCHEDULE.

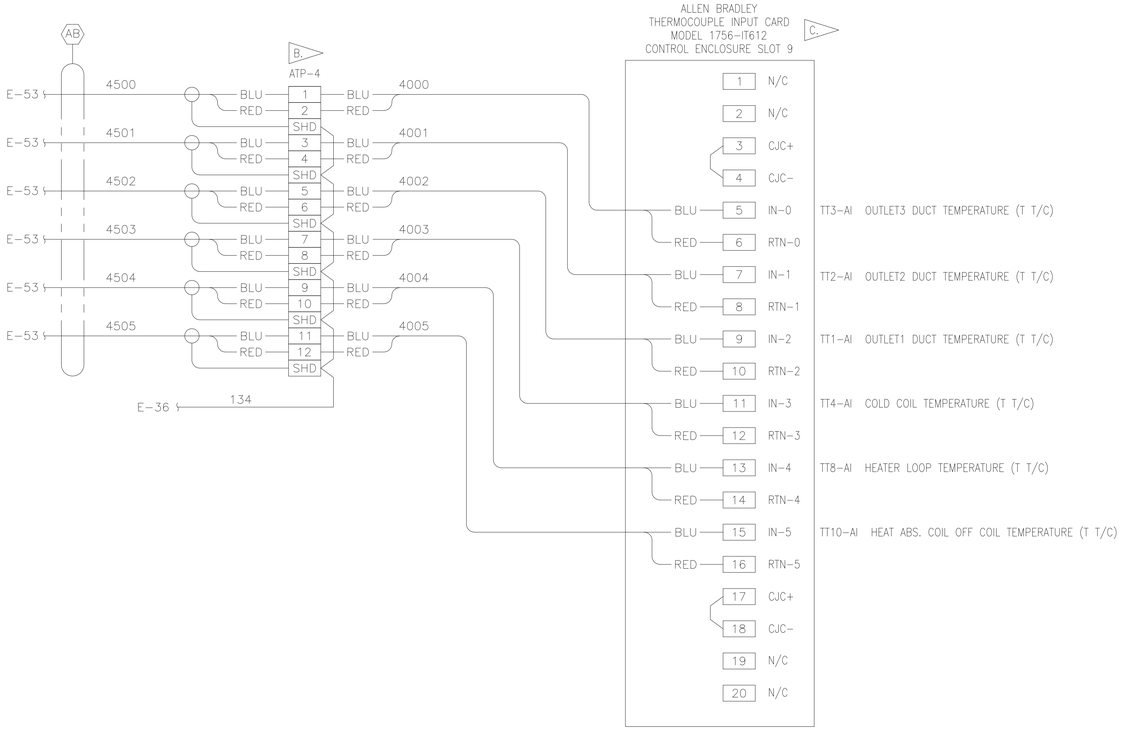

SYM	ZONE	DESCRIPTION	DATE	APPROVAL
		REVISIONS		

SIGNATURES		DATE
DRAFTER	T. JOBE	05/06/11
CHECKER	J. WHITEFORD	05/06/11
ENGINEER	S. RITTER	05/06/11
	R. WITHERSPOON	05/06/11
	R. FRANCO	05/06/11
SUBMITTED	T.O. ADAMS	05/06/11
APPROVED	E.A. THAXTON	05/06/11
TITLE		

NATIONAL AERONAUTICS AND SPACE ADMINISTRATION
JOHN F. KENNEDY SPACE CENTER, NASA
KENNEDY SPACE CENTER, FLORIDA

ASSEMBLY DRAWINGS

MPPU REFURBISHMENT DESIGN
ENVIRONMENTAL CONTROL SYSTEM
PLC WIRING DIAGRAM – SLOT 9

SIZE	DWG. NO.	REV
F	584F0301001	–
PROJ. NO. 95255	SHEET	OF

E-43

P:\95255\DRAWINGS\ELECT\E-43.DWG 03-FEB-2011 10:15 JOBETL

KSC FORM 1-11 (REV. 3/76) (C/G 3/93)

EAR 99

FOR ANY PURPOSE OTHER THAN IN CONNECTION WITH A DEFINITELY RELATED GOVERNMENT PROCUREMENT OPERATION, THE UNITED STATES GOVERNMENT THEREBY INCURS NO RESPONSIBILITY NOR ANY OBLIGATION WHATSOEVER, AND THE FACT THAT THE GOVERNMENT MAY HAVE FORMULATED, FURNISHED, OR IN ANY WAY SUPPLIED THE SAID DRAWINGS, SPECIFICATIONS OR ANY OTHER DATA IS NOT TO BE REGARDED BY IMPLICATION OR OTHERWISE IN ANY MANNER LICENSING THE HOLDER OR ANY OTHER PERSONS OR CORPORATION, OR CONVEYING ANY RIGHTS OR PERMISSION TO MANUFACTURE, USE, OR SELL ANY PATENTED INVENTION THAT IN ANY WAY BE RELATED THERETO.

EAR 99 - NO LICENSE REQUIRED

The information contained in this document is technical in content, but not technical data as defined by the International Traffic in Arms Regulations (ITAR) or the Export Administration Regulations (EAR), and therefore is EAR 99 NLR, no export license required, suitable for public release. (General Prohibition Six (Embargo) applies to all items subject to the EAR, i.e. items on the CCL and within EAR 99 NLR. You may not make an export or reexport contrary to the provisions of part 746 (Embargos and Other Special Controls) of the EAR and 22 CFR part 126.1 of the ITAR).

EDCR # 113043 : NASA KSC Export Control Office (321-867-6008)

EAR 99

SPECIFIC NOTES:

A. REMOVABLE TERMINAL BLOCK HOUSING FOR PLC CARD IS OF TYPE ALLEN BRADLEY P/N 1756-TBNH.

B. ALL INPUT CHANNELS ARE WIRED FOR 0-20 MA INPUT SIGNALS.

C. ATP-5 JUMPERS ARE 20 POLE CUT TO FIT BRIDGES OF TYPE PHOENIX CONTACT FBS20-5 P/N 3030226.

D. USE FERRULES TO TERMINATE ALL WIRES TO ATP-5.

E. UNLESS OTHERWISE SPECIFIED USE 16AWG STRANDED WIRE.

F. SEE DRAWING E-2 FOR WIRE NUMBERING & TYPE SCHEDULE.

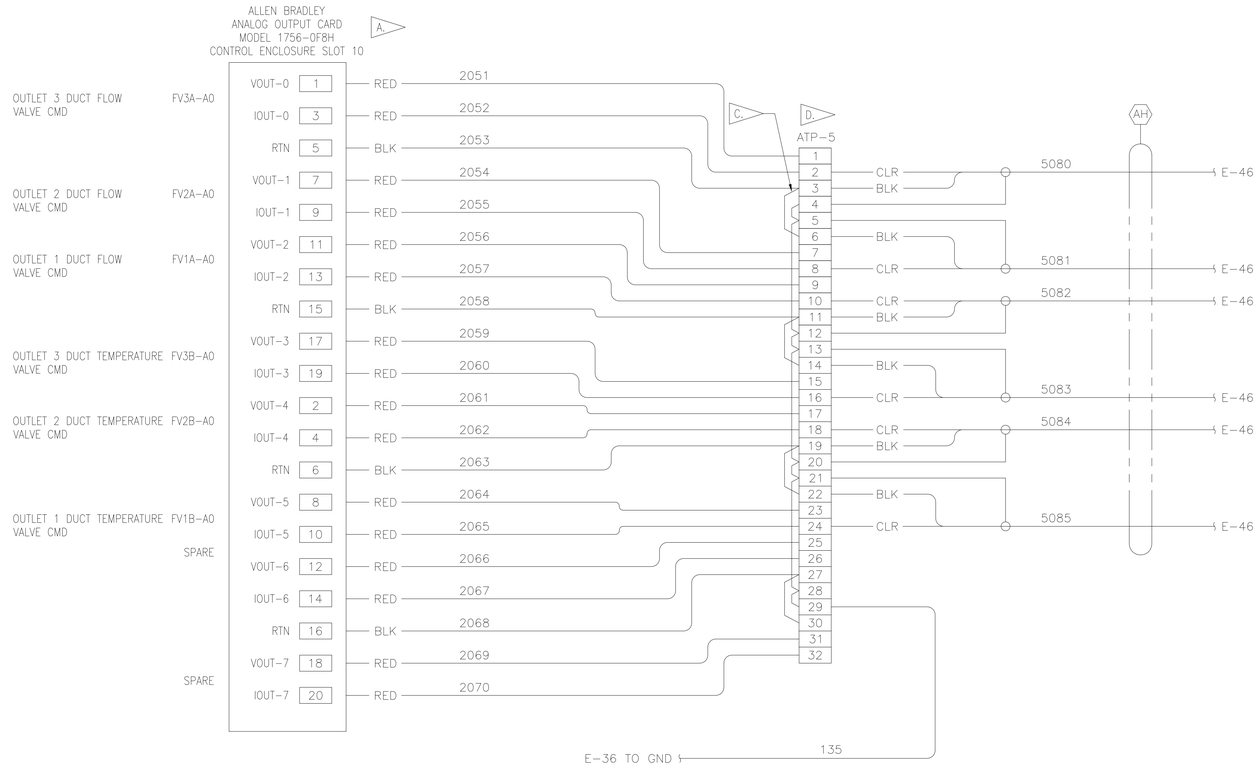

SYM	ZONE	DESCRIPTION	DATE	APPROVAL

REVISIONS

SIGNATURES		DATE
DRAFTER	T. JOBE	05/06/11
CHECKER	J. WHITEFORD	05/06/11
ENGINEER	S. RITTER	05/06/11
	R. WITHERSPOON	05/06/11
	R. FRANCO	05/06/11
SUBMITTED	T.O. ADAMS	05/06/11
APPROVED	E.A. THAXTON	05/06/11
TITLE		

NATIONAL AERONAUTICS AND SPACE ADMINISTRATION
JOHN F. KENNEDY SPACE CENTER, NASA
KENNEDY SPACE CENTER, FLORIDA

ASSEMBLY DRAWINGS

MPPU REFURBISHMENT DESIGN
ENVIRONMENTAL CONTROL SYSTEM
PLC WIRING DIAGRAM - SLOT 10

SIZE F | DWG. NO. 584F0301001 | REV -

PROJ. NO. 95255 | SHEET OF

E-44

P:\95255\DRAWINGS\ELECT\E-44.DWG 03-FEB-2011 10:51 JOBETL

KSC FORM 1-11 (REV. 3/76) (C/G 3/93)

EAR 99

FOR ANY PURPOSE OTHER THAN IN CONNECTION WITH A DEFINITELY RELATED GOVERNMENT PROCUREMENT OPERATION, THE UNITED STATES GOVERNMENT THEREBY INCURS NO RESPONSIBILITY NOR ANY OBLIGATION WHATSOEVER, AND THE FACT THAT THE GOVERNMENT MAY HAVE FORMULATED, FURNISHED, OR IN ANY WAY SUPPLIED THE SAID DRAWINGS, SPECIFICATIONS OR ANY OTHER DATA IS NOT TO BE REGARDED BY IMPLICATION OR OTHERWISE IN ANY MANNER LICENSING THE HOLDER OR ANY OTHER PERSONS OR CORPORATION, OR CONVEYING ANY RIGHTS OR PERMISSION TO MANUFACTURE, USE, OR SELL ANY PATENTED INVENTION THAT IN ANY WAY BE RELATED THERETO.

EAR 99 - NO LICENSE REQUIRED

The information contained in the document is technical in content, but not technical data as defined by the International Traffic in Arms Regulations (ITAR) or the Export Administration Regulations (EAR), and therefore is EAR 99 NLR, no export license required, suitable for public release. (General Prohibition Six (Embargo) applies to all items subject to the EAR, i.e. items on the CCL and within EAR 99 NLR. You may not make an export or reexport contrary to the provisions of part 746 (Embargos and Other Special Controls) of the EAR and 22 CFR part 126.1 of the ITAR).

EDDR # 113043 - NASA KSC Export Control Office (321- 867-6009)

EAR 99

SPECIFIC NOTES:

A. REMOVABLE TERMINAL BLOCK HOUSING FOR PLC CARD IS OF TYPE ALLEN BRADLEY P/N 1756-TBNH.

B. ALL INPUT CHANNELS ARE WIRED FOR 0-20 MA INPUT SIGNALS.

C. ATP-6 JUMPERS ARE 20 POLE CUT TO FIT BRIDGES OF TYPE PHOENIX CONTACT FBS20-5 P/N 3030226.

D. USE FERRULES TO TERMINATE ALL WIRES TO ATP-6.

E. UNLESS OTHERWISE SPECIFIED USE 16AWG STRANDED WIRE.

F. SEE DRAWING E-2 FOR WIRE NUMBERING & TYPE SCHEDULE.

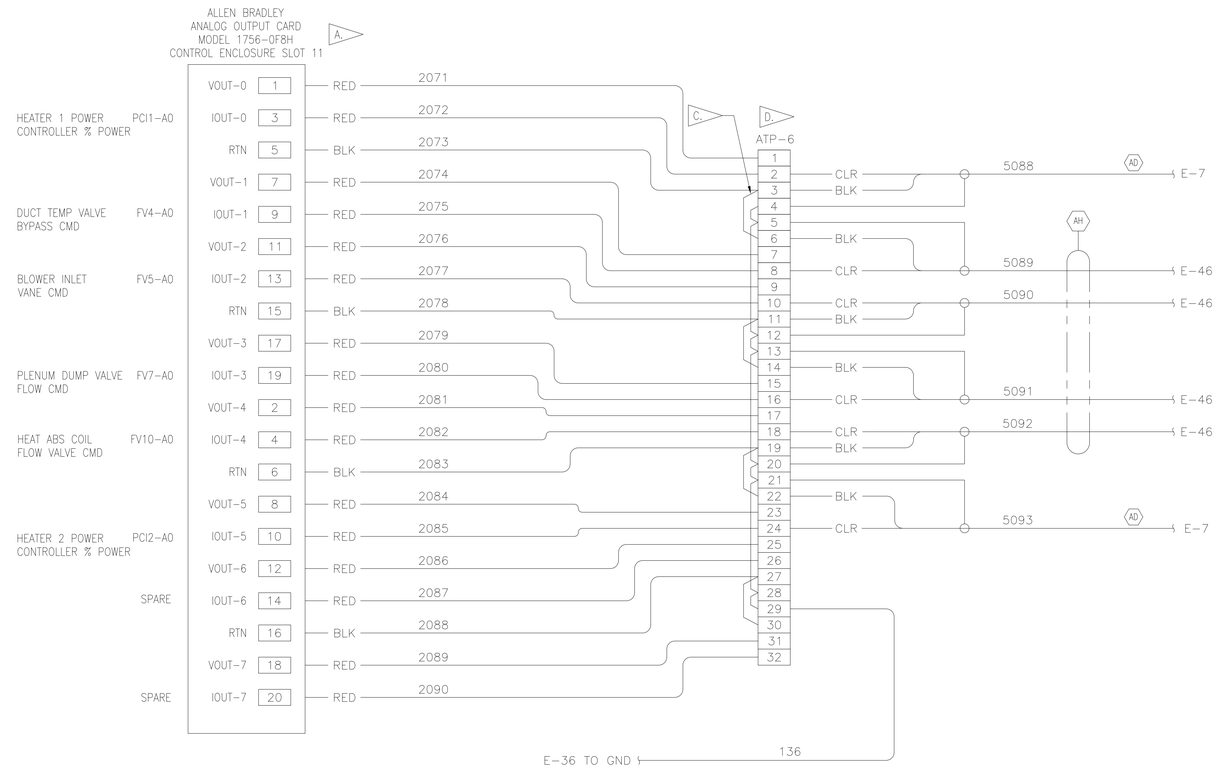

SYM	ZONE	DESCRIPTION	DATE	APPROVAL

REVISIONS

SIGNATURES		DATE
DRAFTER	T. JOBE	05/06/11
CHECKER	J. WHITEFORD	05/06/11
ENGINEER	S. RITTER	05/06/11
	R. WITHERSPOON	05/06/11
	R. FRANCO	05/06/11
SUBMITTED	T.O. ADAMS	05/06/11
APPROVED	E.A. THAXTON	05/06/11
TITLE		

NATIONAL AERONAUTICS AND SPACE ADMINISTRATION
JOHN F. KENNEDY SPACE CENTER, NASA
KENNEDY SPACE CENTER, FLORIDA

ASSEMBLY DRAWINGS

MPPU REFURBISHMENT DESIGN
ENVIRONMENTAL CONTROL SYSTEM
PLC WIRING DIAGRAM - SLOT 11

SIZE F | DWG. NO. 584F0301001 | REV -

PROJ. NO. 95255 | SHEET OF

E-45

EAR 99

KSC FORM 1-11 (REV. 3/76) (C/G 3/93)

FOR ANY PURPOSE OTHER THAN IN CONNECTION WITH A DEFINITELY RELATED GOVERNMENT PROCUREMENT OPERATION, THE UNITED STATES GOVERNMENT THEREBY INCURS NO RESPONSIBILITY NOR ANY OBLIGATION WHATSOEVER; AND THE FACT THAT THE GOVERNMENT MAY HAVE FORMULATED, FURNISHED, OR IN ANY WAY SUPPLIED THE SAID DRAWINGS, SPECIFICATIONS OR ANY OTHER DATA IS NOT TO BE REGARDED BY IMPLICATION OR OTHERWISE IN ANY MANNER LICENSING THE HOLDER OR ANY OTHER PERSONS OR CORPORATION, OR CONVEYING ANY RIGHTS OR PERMISSION TO MANUFACTURE, USE, OR SELL ANY PATENTED INVENTION THAT IN ANY WAY BE RELATED THERETO.

EAR 99 – NO LICENSE REQUIRED

The information contained in this document is technical/dm content, but not technical data as defined by the International Traffic in Arms (ITAR) or the Export Administration Regulations (EAR), and therefore is EAR 99 NLR, no license required, suitable for public release. (General Prohibition Six (Embargo) applies to all items subject to the EAR, i.e. items on the CCL and within EAR 99 NLR. You may not make an export or reexport contrary to the provisions of part 746 (Embargos and Other Special Controls) of the EAR and 22 CFR part 126.1 of the ITAR).

EDDR # 113043 : NASA KSC Export Control Office (321-867-9209)

EAR 99

SPECIFIC NOTES:

A. USE FERRULES TO TERMINATE ALL WIRES ON TERMINAL BLOCKS.

VALVE CONTROL/FEEDBACK JB

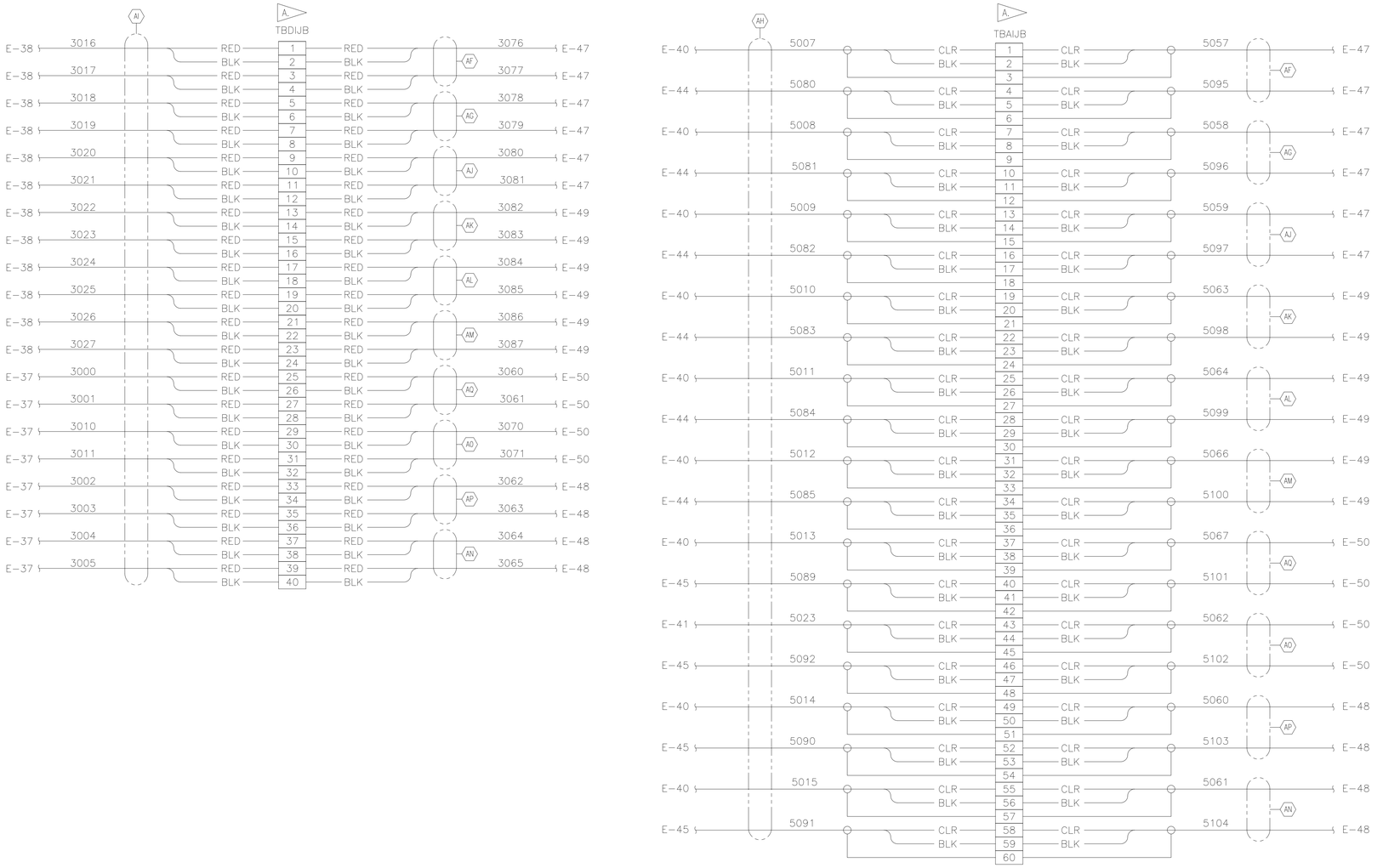

SYM	ZONE	DESCRIPTION	DATE	APPROVAL
		REVISIONS		

SIGNATURES		DATE
DRAFTER	T. JOBE	05/06/11
CHECKER	J. WHITEFORD	05/06/11
ENGINEER	S. RITTER	05/06/11
	R. WITHERSPOON	05/06/11
	R. FRANCO	05/06/11
SUBMITTED	T.O. ADAMS	05/06/11
APPROVED	E.A. THAXTON	05/06/11

NATIONAL AERONAUTICS AND SPACE ADMINISTRATION
JOHN F. KENNEDY SPACE CENTER, NASA
KENNEDY SPACE CENTER, FLORIDA

ASSEMBLY DRAWINGS
MPPU REFURBISHMENT DESIGN
ENVIRONMENTAL CONTROL SYSTEM
PLC WIRING DIAGRAM
VALVE CONTROL FEEDBACK

TITLE

SIZE	DWG. NO.	REV
F	584F0301001	–
PROJ. NO. 95255	SHEET	OF

E-46

P:\95255\DRAWINGS\ELECT\E-46.DWG 03-FEB-2011 13:10 JOBETL

KSC FORM 1-11 (REV. 3/76) (C/G 3/93)

EAR 99

FOR ANY PURPOSE OTHER THAN IN CONNECTION WITH A DEFINITELY RELATED GOVERNMENT PROCUREMENT OPERATION, THE UNITED STATES GOVERNMENT THEREBY INCURS NO RESPONSIBILITY NOR ANY OBLIGATION WHATSOEVER; AND THE FACT THAT THE GOVERNMENT MAY HAVE FORMULATED, FURNISHED, OR IN ANY WAY SUPPLIED THE SAID DRAWINGS, SPECIFICATIONS OR ANY OTHER DATA IS NOT TO BE REGARDED BY IMPLICATION OR OTHERWISE IN ANY MANNER LICENSING THE HOLDER OR ANY OTHER PERSONS OR CORPORATION, OR CONVEYING ANY RIGHTS OR PERMISSION TO MANUFACTURE, USE, OR SELL ANY PATENTED INVENTION THAT IN ANY WAY BE RELATED THERETO.

EAR 99 – NO LICENSE REQUIRED

The information contained in this drawing is technical/tn content, but not technical data as defined by the International Traffic in Arms (ITAR) or the Export Administration Regulations (EAR), and therefore is EAR 99 NLR, meaning no export required, suitable for public release. (General Prohibition Six (Embargo) applies to all items subject to the EAR, i.e. items on the CCL and within EAR 99 NLR. You may not make an export or reexport contrary to the prohibitions of part 746 (Embargos and Other Special Controls) of the EAR and 22 CFR part 126.1 of the ITAR).

EDDR # 113043 : NASA KSC Export Control Office (321-867-6039)

EAR 99

SPECIFIC NOTES:

A. ONLY TERMINAL POINTS USED FOR FIELD WIRING ARE SHOWN.

B. SELECT 4–20MA ON THE OM1 BOARD FOR POSITION INPUT.

VALVE POWER DISTRIBUTION JB

E-34 — AV — GRN 218, BLK 232, WHT 204

E-34 — AW — GRN 219, BLK 233, WHT 205

E-34 — AX — GRN 220, BLK 234, WHT 206

VALVE CONTROL/FEEDBACK DISTRIBUTION JB

AF: E-46 — 3076, 3077, 5057, 5095

AG: E-46 — 3078, 3079, 5058, 5096

AJ: E-46 — 3080, 3081, 5059, 5097

A524783 — FV3A / OM1 MODULE (A.)

M; CONN. L; J8 J9; CLC2 OPC2; RETRANSMISSION POSITION (−, +)

CONN. A: G L1 L2 — GRN BLK WHT

CONN. D: 22 23 26 27 — RED BLK RED BLK

CONN. P: 14 15 16 (−, +) — BLK CLR — D.E.

CONN. R: 12 13 — BLK CLR — D.E.

A524782 — FV2A / OM1 MODULE (A.)

M; CONN. L; J8 J9; CLC2 OPC2; RETRANSMISSION POSITION (−, +)

CONN. A: G L1 L2 — GRN BLK WHT

CONN. D: 22 23 26 27 — RED BLK RED BLK

CONN. P: 14 15 16 (−, +) — BLK CLR — D.E.

CONN. R: 12 13 — BLK CLR — D.E.

A524781 — FV1A / OM1 MODULE (A.)

M; CONN. L; J8 J9; CLC2 OPC2; RETRANSMISSION POSITION (−, +)

CONN. A: G L1 L2 — GRN BLK WHT

CONN. D: 22 23 26 27 — RED BLK RED BLK

CONN. P: 14 15 16 (−, +) — BLK CLR — D.E.

CONN. R: 12 13 — BLK CLR — D.E.

SYM	ZONE	DESCRIPTION	DATE	APPROVAL
		REVISIONS		

SIGNATURES		DATE
DRAFTER	T. JOBE	05/06/11
CHECKER	J. WHITEFORD	05/06/11
ENGINEER	S. RITTER	05/06/11
	R. WITHERSPOON	05/06/11
	R. FRANCO	05/06/11
SUBMITTED	T.O. ADAMS	05/06/11
APPROVED	E.A. THAXTON	05/06/11

NATIONAL AERONAUTICS AND SPACE ADMINISTRATION
JOHN F. KENNEDY SPACE CENTER, NASA
KENNEDY SPACE CENTER, FLORIDA

ASSEMBLY DRAWINGS

MPPU REFURBISHMENT DESIGN
ENVIRONMENTAL CONTROL SYSTEM
WIRING DIAGRAM
FLOW CONTROL VALVES – SHEET 1

TITLE

SIZE F | DWG. NO. 584F0301001 | REV. –

PROJ. NO. 95255 | SHEET | OF

E-47

P:\95255\DRAWINGS\ELECT\E-47.DWG 03-FEB-2011 13:46 JOBETL

KSC FORM 1-11 (REV. 3/76) (C/G 3/93)

EAR 99

FOR ANY PURPOSE OTHER THAN IN CONNECTION WITH A DEFINITELY RELATED GOVERNMENT PROCUREMENT OPERATION, THE UNITED STATES GOVERNMENT THEREBY INCURS NO RESPONSIBILITY NOR ANY OBLIGATION WHATSOEVER; AND THE FACT THAT THE GOVERNMENT MAY HAVE FORMULATED, FURNISHED, OR IN ANY WAY SUPPLIED THE SAID DRAWINGS, SPECIFICATIONS OR ANY OTHER DATA IS NOT TO BE REGARDED BY IMPLICATION OR OTHERWISE IN ANY MANNER LICENSING THE HOLDER OR ANY OTHER PERSONS OR CORPORATION, OR CONVEYING ANY RIGHTS OR PERMISSION TO MANUFACTURE, USE, OR SELL ANY PATENTED INVENTION THAT IN ANY WAY BE RELATED THERETO.

EAR 99 – NO LICENSE REQUIRED

The information contained in this document is technical/in content, but not technical data as defined by the International Traffic in Arms (ITAR) or the Export Administration Regulations (EAR), and therefore is EAR 99 NLR, no license required, suitable for public release. (General Prohibition Six (Embargo) applies to all items subject to the EAR, i.e. items on the CCL and within EAR 99 NLR. You may not make an export or reexport contrary to the provisions of part 746 (Embargos and Other Special Controls) of the EAR and 22 CFR part 126.1 of the ITAR).

EDDR # 113043 : NASA KSC Export Control Office (321-867-6039)

EAR 99

SPECIFIC NOTES:

A. ONLY TERMINAL POINTS USED FOR FIELD WIRING ARE SHOWN.

B. SELECT 4-20MA ON THE OM1 BOARD FOR POSITION INPUT.

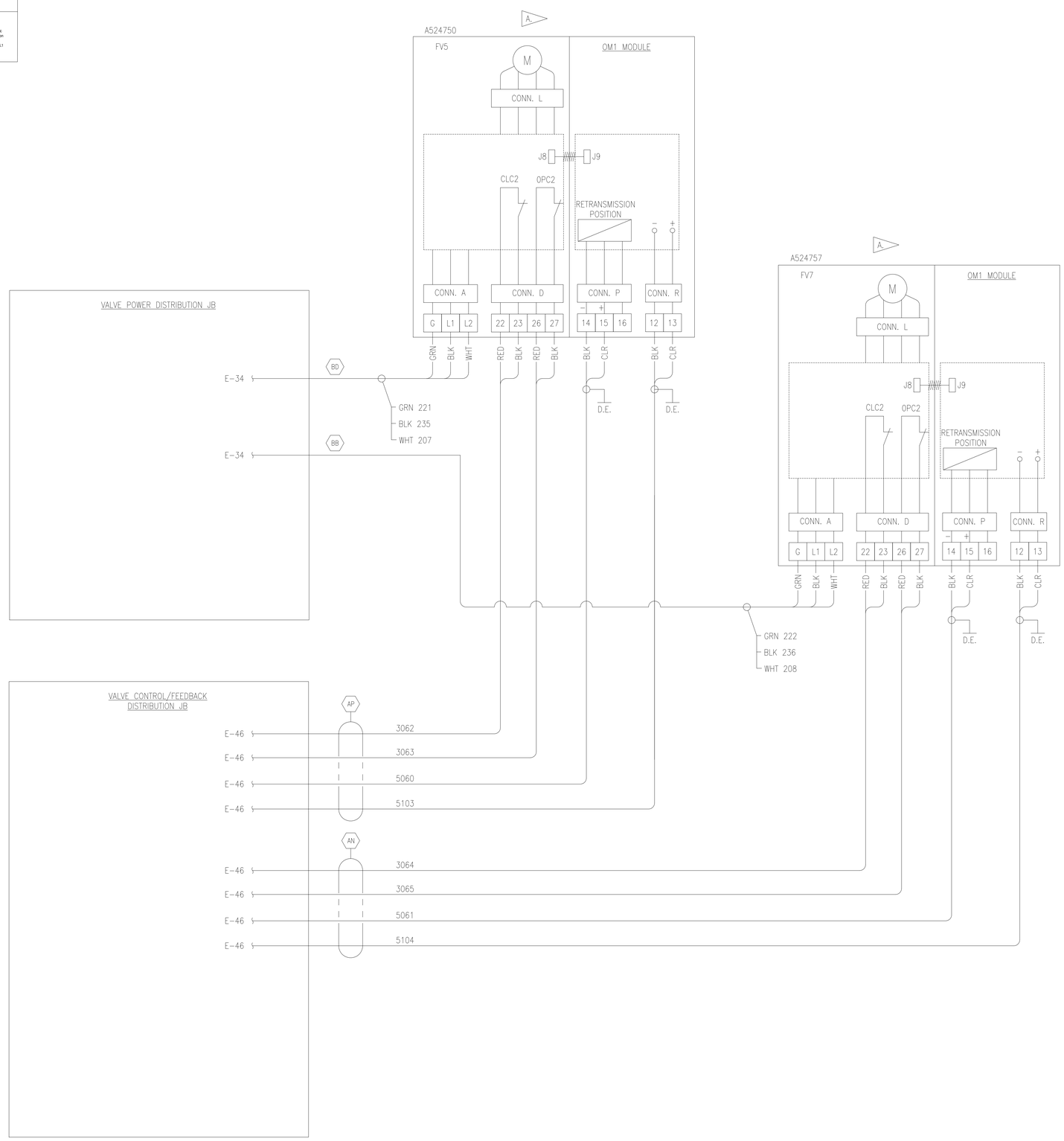

SYM	ZONE	DESCRIPTION	DATE	APPROVAL
REVISIONS				

SIGNATURES		DATE
DRAFTER	T. JOBE	05/06/11
CHECKER	J. WHITEFORD	05/06/11
ENGINEER	S. RITTER	05/06/11
	R. WITHERSPOON	05/06/11
	R. FRANCO	05/06/11
SUBMITTED	T.O. ADAMS	05/06/11
APPROVED	E.A. THAXTON	05/06/11
TITLE		

NATIONAL AERONAUTICS AND SPACE ADMINISTRATION
JOHN F. KENNEDY SPACE CENTER, NASA
KENNEDY SPACE CENTER, FLORIDA

ASSEMBLY DRAWINGS

MPPU REFURBISHMENT DESIGN ENVIRONMENTAL CONTROL SYSTEM WIRING DIAGRAM FLOW CONTROL VALVES – SHEET 2

SIZE	DWG. NO.	REV
F	584F0301001	–
PROJ. NO. 95255	SHEET	OF

E-48

P:\95255\DRAWINGS\ELECT\E-48.DWG 03-FEB-2011 13:46 JOBETL

KSC FORM 1-11 (REV. 3/76) (C/G 3/93)

EAR 99

FOR ANY PURPOSE OTHER THAN IN CONNECTION WITH A DEFINITELY RELATED GOVERNMENT PROCUREMENT OPERATION, THE UNITED STATES GOVERNMENT THEREBY INCURS NO RESPONSIBILITY NOR ANY OBLIGATION WHATSOEVER, AND THE FACT THAT THE GOVERNMENT MAY HAVE FORMULATED, FURNISHED, OR IN ANY WAY SUPPLIED THE SAID DRAWINGS, SPECIFICATIONS OR ANY OTHER DATA IS NOT TO BE REGARDED BY IMPLICATION OR OTHERWISE IN ANY MANNER LICENSING THE HOLDER OR ANY OTHER PERSONS OR CORPORATION, OR CONVEYING ANY RIGHTS OR PERMISSION TO MANUFACTURE, USE, OR SELL ANY PATENTED INVENTION THAT IN ANY WAY BE RELATED THERETO.

EAR 99 - NO LICENSE REQUIRED

The information contained in the document is technical in content, but not technical data as defined by the International Traffic in Arms Regulations (ITAR) or the Export Administration Regulations (EAR), and therefore is EAR 99 NLR, no export license required, suitable for public release. (General Prohibition Six (Embargo) applies to all items subject to the EAR, i.e. items on the CCL and within EAR 99 NLR. You may not make an export or reexport contrary to the provisions of part 746 (Embargos and Other Special Controls) of the EAR and 22 CFR part 126.1 of the ITAR).

EDDR # 113043 : NASA KSC Export Control Office (321- 867-0009)

EAR 99

SPECIFIC NOTES:

A. ONLY TERMINAL POINTS USED FOR FIELD WIRING ARE SHOWN.

B. USE INLINE SPLICE TO CONNECT FIELD WIRING TO FULL OPEN AND FULL CLOSED LIMIT SWITCHES. SEE E-1 FOR SPLICING DETAILS.

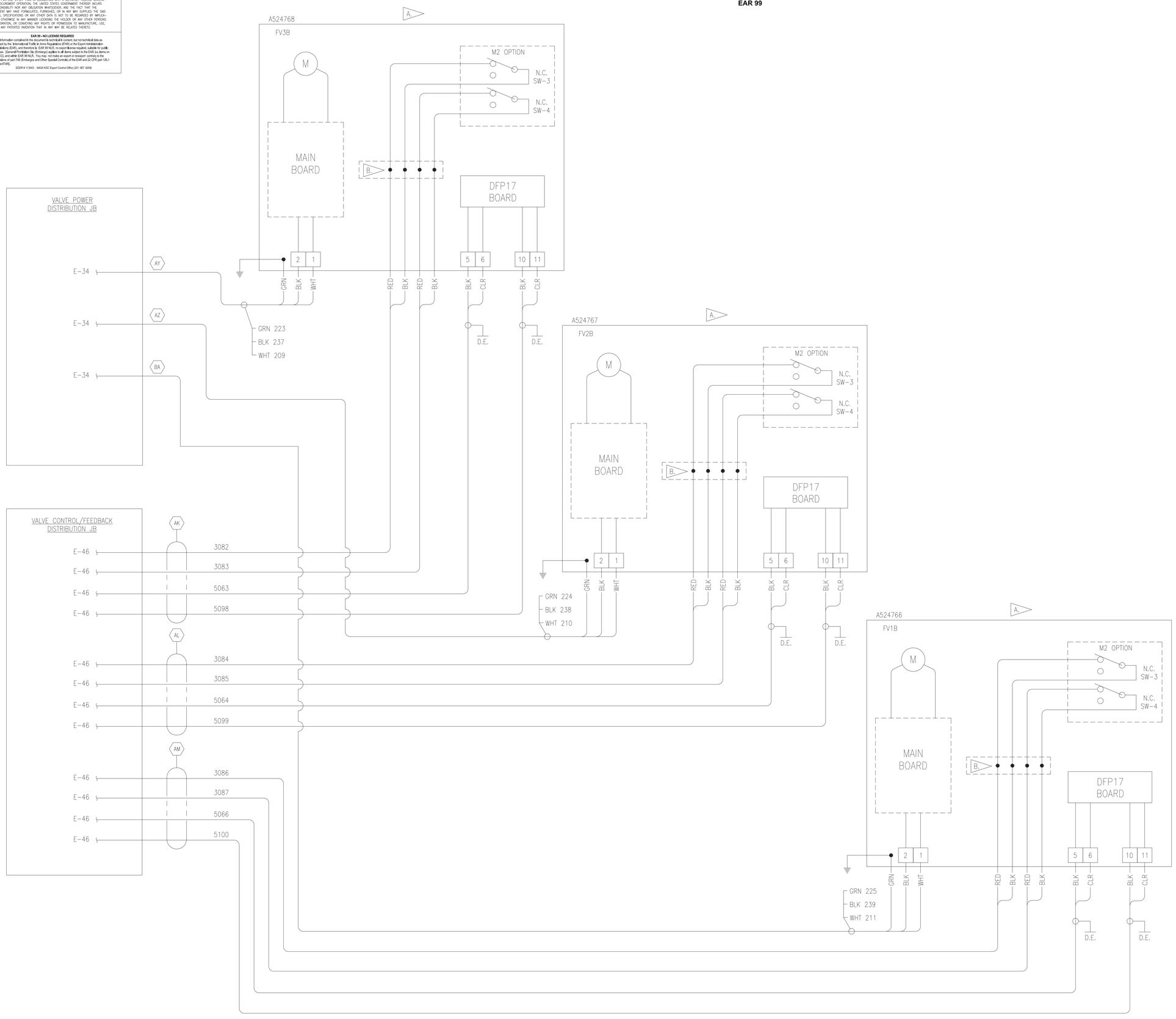

SYM	ZONE	DESCRIPTION	DATE	APPROVAL

REVISIONS

SIGNATURES		DATE
DRAFTER	T. JOBE	05/06/11
CHECKER	J. WHITEFORD	05/06/11
ENGINEER	S. RITTER	05/06/11
	R. WITHERSPOON	05/06/11
	R. FRANCO	05/06/11
SUBMITTED	T.O. ADAMS	05/06/11
APPROVED	E.A. THAXTON	05/06/11
TITLE		

NATIONAL AERONAUTICS AND SPACE ADMINISTRATION
JOHN F. KENNEDY SPACE CENTER, NASA
KENNEDY SPACE CENTER, FLORIDA

ASSEMBLY DRAWINGS

MPPU REFURBISHMENT DESIGN
ENVIRONMENTAL CONTROL SYSTEM
WIRING DIAGRAM
TEMP CONTROL VALVES – SHEET 1

SIZE F | DWG. NO. 584F0301001 | REV –

PROJ. NO. 95255 | SHEET OF

E-49

P:\95255\DRAWINGS\ELECT\E-49.DWG 03-FEB-2011 14:10 JOBETL

KSC FORM 1-11 (REV. 3/76) (C/G 3/93)

EAR 99

FOR ANY PURPOSE OTHER THAN IN CONNECTION WITH A DEFINITELY RELATED GOVERNMENT PROCUREMENT OPERATION, THE UNITED STATES GOVERNMENT THEREBY INCURS NO RESPONSIBILITY NOR ANY OBLIGATION WHATSOEVER, AND THE FACT THAT THE GOVERNMENT MAY HAVE FORMULATED, FURNISHED, OR IN ANY WAY SUPPLIED THE SAID DRAWINGS, SPECIFICATIONS OR ANY OTHER DATA IS NOT TO BE REGARDED BY IMPLICATION OR OTHERWISE IN ANY MANNER LICENSING THE HOLDER OR ANY OTHER PERSONS OR CORPORATION, OR CONVEYING ANY RIGHTS OR PERMISSION TO MANUFACTURE, USE, OR SELL ANY PATENTED INVENTION THAT IN ANY WAY BE RELATED THERETO.

EAR 99 - NO LICENSE REQUIRED

The information contained in the document is technical in content, but not technical data as defined by the International Traffic in Arms Regulations (ITAR) or the Export Administration Regulations (EAR), and therefore is EAR 99 NLR, no export license required, suitable for public release. (General Prohibition Six (Embargo) applies to all items subject to the EAR, i.e. items on the CCL and within EAR 99 NLR. You may not make an export or reexport contrary to the provisions of part 746 (Embargos and Other Special Controls) of the EAR and 22 CFR part 126.1 of the ITAR).

EDDR # 113043 : NASA KSC Export Control Office (321- 867-6208)

EAR 99

SPECIFIC NOTES:

A. ONLY TERMINAL POINTS USED FOR FIELD WIRING ARE SHOWN.

B. USE INLINE SPLICE TO CONNECT FIELD WIRING TO FULL OPEN AND FULL CLOSED LIMIT SWITCHES. SEE E-1 FOR SPLICING DETAILS.

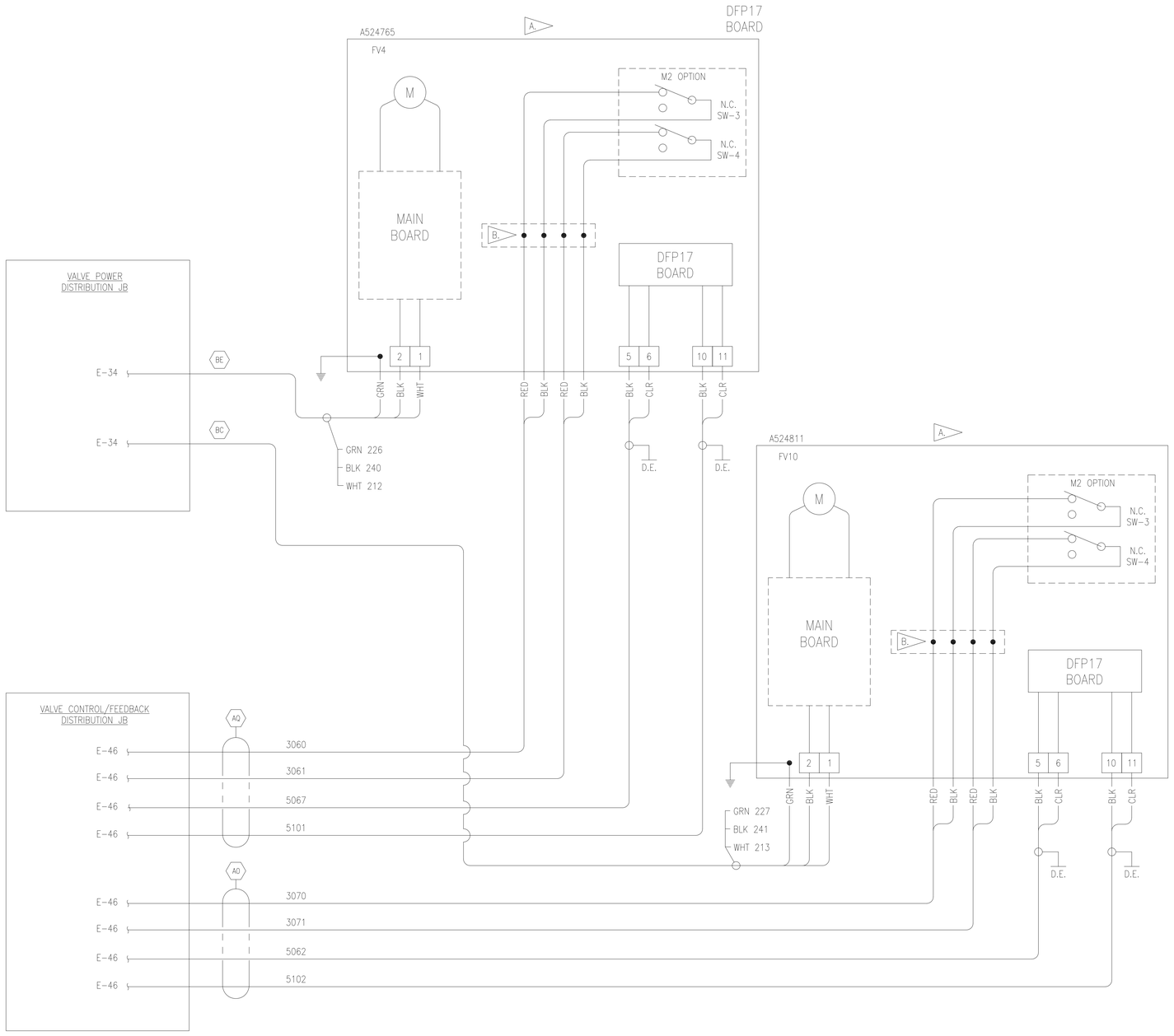

SYM	ZONE	DESCRIPTION	DATE	APPROVAL

REVISIONS

SIGNATURES		DATE
DRAFTER	T. JOBE	05/06/11
CHECKER	J. WHITEFORD	05/06/11
ENGINEER	S. RITTER	05/06/11
	R. WITHERSPOON	05/06/11
	R. FRANCO	05/06/11
SUBMITTED	T.O. ADAMS	05/06/11
APPROVED	E.A. THAXTON	05/06/11

NATIONAL AERONAUTICS AND SPACE ADMINISTRATION
JOHN F. KENNEDY SPACE CENTER, NASA
KENNEDY SPACE CENTER, FLORIDA

ASSEMBLY DRAWINGS

MPPU REFURBISHMENT DESIGN
ENVIRONMENTAL CONTROL SYSTEM
WIRING DIAGRAM
TEMP CONTROL VALVES – SHEET 2

SIZE F | DWG. NO. 584F0301001 | REV –

TITLE | PROJ. NO. 95255 | SHEET OF

E-50

P:\95255\DRAWINGS\ELECT\E-50.DWG 03-FEB-2011 14:09 JOBETL

KSC FORM 1-11 (REV. 3/76) (C/G 3/93)

EAR 99

FOR ANY PURPOSE OTHER THAN IN CONNECTION WITH A DEFINITELY RELATED GOVERNMENT PROCUREMENT OPERATION, THE UNITED STATES GOVERNMENT THEREBY INCURS NO RESPONSIBILITY NOR ANY OBLIGATION WHATSOEVER; AND THE FACT THAT THE GOVERNMENT MAY HAVE FORMULATED, FURNISHED, OR IN ANY WAY SUPPLIED THE SAID DRAWINGS, SPECIFICATIONS OR ANY OTHER DATA IS NOT TO BE REGARDED BY IMPLICATION OR OTHERWISE IN ANY MANNER LICENSING THE HOLDER OR ANY OTHER PERSONS OR CORPORATION, OR CONVEYING ANY RIGHTS OR PERMISSION TO MANUFACTURE, USE, OR SELL ANY PATENTED INVENTION THAT IN ANY WAY BE RELATED THERETO.

EAR 99 – NO LICENSE REQUIRED

The information contained in this document is technical in content, but not technical data as defined by the International Traffic in Arms (ITAR) or the Export Administration Regulations (EAR), and therefore is EAR 99 NLR, meaning that no license is required, suitable for public release. (General Prohibition Six (Embargo) applies to all items subject to the EAR, i.e. items on the CCL and within EAR 99 NLR. You may not make an export or reexport contrary to the provisions of part 746 (Embargos and Other Special Controls) of the EAR and 22 CFR part 126.1 of the ITAR).

EDDR # 113043 : NASA KSC Export Control Office (321- 867-9209)

EAR 99

SPECIFIC NOTES:

A. REFERENCE DETAIL WM ON SHEET E-52 FOR LAYOUT OF TRANSMITTERS ON PANELS.

B. ALL WIRING SHALL BE SHIELDED STRANDED COPPER WIRE.

C. SEE DRAWING E-2 FOR WIRE NUMBERING & TYPE SCHEDULE.

D USE FERRULES TO TERMINATE ALL WIRES TO TB-5 & TB-6.

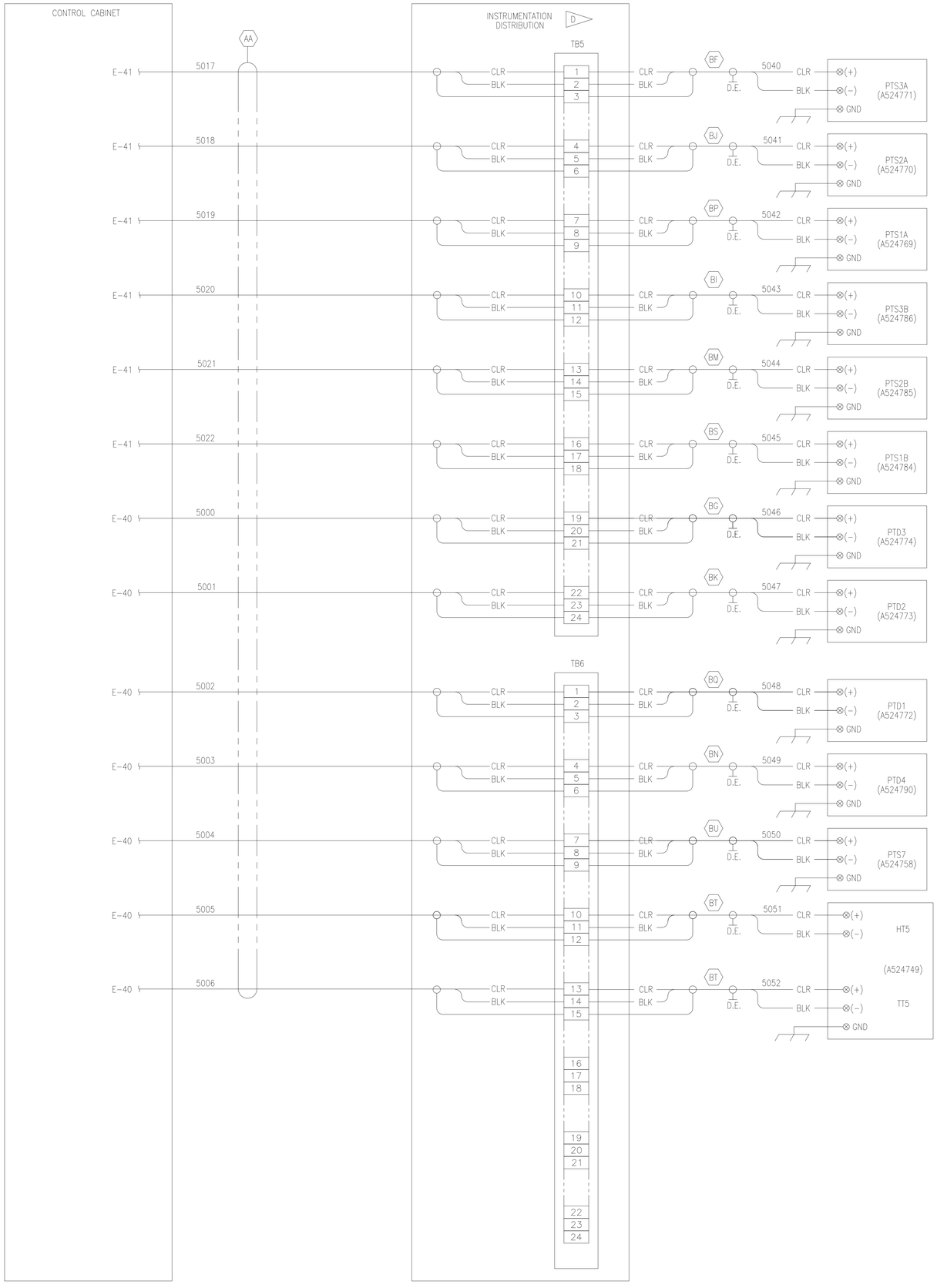

SYM	ZONE	DESCRIPTION	DATE	APPROVAL

REVISIONS

SIGNATURES		DATE
DRAFTER	T. JOBE	05/06/11
CHECKER	J. WHITEFORD	05/06/11
ENGINEER	S. RITTER	05/06/11
	R. WITHERSPOON	05/06/11
	R. FRANCO	05/06/11
SUBMITTED	T.O. ADAMS	05/06/11
APPROVED	E.A. THAXTON	05/06/11

NATIONAL AERONAUTICS AND SPACE ADMINISTRATION
JOHN F. KENNEDY SPACE CENTER, NASA
KENNEDY SPACE CENTER, FLORIDA

ASSEMBLY DRAWINGS

MPPU REFURBISHMENT DESIGN
ENVIRONMENTAL CONTROL SYSTEM
WIRING DIAGRAM
ANALOG INSTRUMENTATION

SIZE F | DWG. NO. 584F0301001 | REV –

PROJ. NO. 95255 | SHEET | OF

TITLE E-51

P:\95255\DRAWINGS\ELECT\E-51.DWG 03-FEB-2011 15:29 JOBEL

FOR ANY PURPOSE OTHER THAN IN CONNECTION WITH A DEFINITELY RELATED GOVERNMENT PROCUREMENT OPERATION, THE UNITED STATES GOVERNMENT THEREBY INCURS NO RESPONSIBILITY NOR ANY OBLIGATION WHATSOEVER, AND THE FACT THAT THE GOVERNMENT MAY HAVE FORMULATED, FURNISHED, OR IN ANY WAY SUPPLIED THE SAID DRAWINGS, SPECIFICATIONS OR ANY OTHER DATA IS NOT TO BE REGARDED BY IMPLICATION OR OTHERWISE IN ANY MANNER LICENSING THE HOLDER OR ANY OTHER PERSONS OR CORPORATION, OR CONVEYING ANY RIGHTS OR PERMISSION TO MANUFACTURE, USE, OR SELL ANY PATENTED INVENTION THAT IN ANY WAY BE RELATED THERETO.

EAR 99 - NO LICENSE REQUIRED

The information contained in this document is technically correct, but not technical data as defined by the International Traffic in Arms Regulations (ITAR) or the Export Administration Regulations (EAR), and therefore is EAR 99 NLR, no export license required, suitable for public release. (General Prohibition Six (Embargo) applies to all items subject to the EAR, i.e. items on the CCL and within EAR 99 NLR. You may not make an export or reexport contrary to the provisions of part 746 (Embargos and Other Special Controls) of the EAR and 22 CFR part 126.1 of the ITAR).

EDDR # 113043 - NASA KSC Export Control Office (321- 867-0009)

EAR 99

SPECIFIC NOTES:

A. UPDATE SERIAL NUMBERS IF TRANSMITTERS ARE REPLACED OR MODIFIED.

A.

	TRANSMITTER SERIAL NUMBER			
(H2O) RANGE	INSTRUMENT DESIGNATION	UNIT S/N T304-001	UNIT S/N T304-002	UNIT S/N T304-003
0-83	PTS1B A524784	97160309	97160322	97160332
0-83	PTS2B A524785	97160333	97160320	97160331
0-83	PTS3B A524786	97160311	97160310	97160321
0-18	PTD1 A524772	97160317	97160329	97160306
0-18	PTD2 A524773	97160328	97160319	97160308
0-18	PTD3 A524774	97160330	97160307	97160318
0-200	PTS7 A524758	97160324	97160327	97160301
0-200	PTS2A A524770	97160304	97160303	97160326
0-200	PTD4 A524790	97160313	97160312	97160305
0-200	PTS1A A524769	97160323	97160315	97160314
0-200	PTS3A A524771	97160316	97160325	97160302

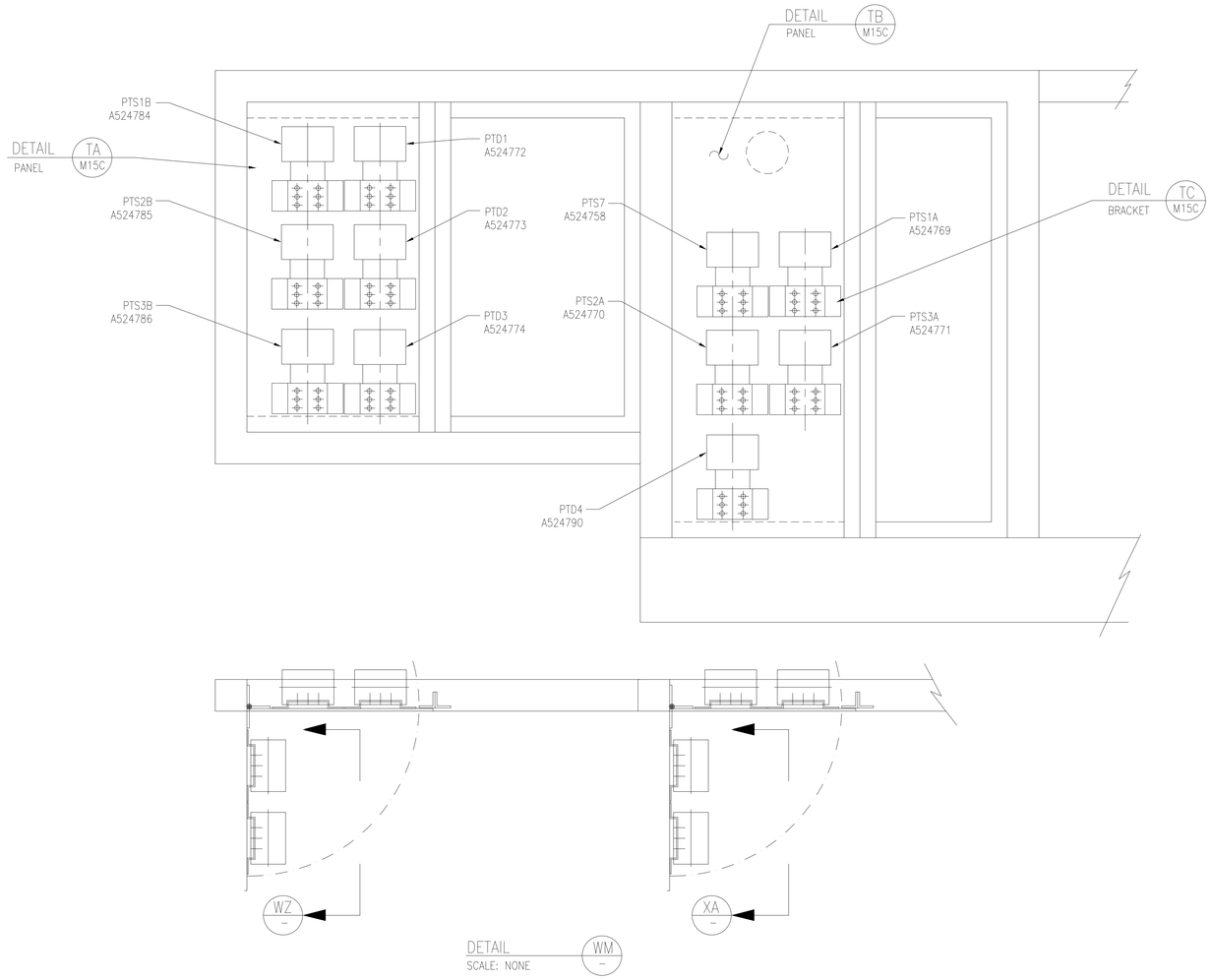

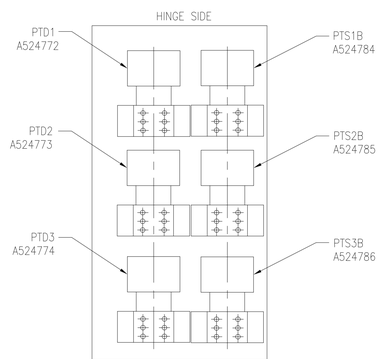

VIEW WZ
SCALE: NONE
DOOR OPEN

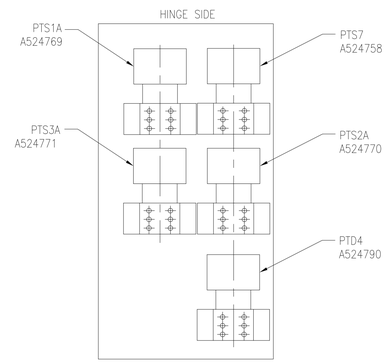

VIEW XA
SCALE: NONE
DOOR OPEN

SYM	ZONE	DESCRIPTION	DATE	APPROVAL

REVISIONS

SIGNATURES		DATE
DRAFTER	T. JOBE	05/06/11
CHECKER	J. WHITEFORD	05/06/11
ENGINEER	S. RITTER	05/06/11
	R. WITHERSPOON	05/06/11
	R. FRANCO	05/06/11
SUBMITTED	T.O. ADAMS	05/06/11
APPROVED	E.A. THAXTON	05/06/11
TITLE		

NATIONAL AERONAUTICS AND SPACE ADMINISTRATION
JOHN F. KENNEDY SPACE CENTER, NASA
KENNEDY SPACE CENTER, FLORIDA

ASSEMBLY DRAWINGS

MPPU REFURBISHMENT DESIGN
ENVIRONMENTAL CONTROL SYSTEM
TRANSMITTER PANEL LAYOUT

SIZE F | DWG. NO. 584F0301001 | REV –

PROJ. NO. 95255 | SHEET OF

E-52

P:\95255\DRAWINGS\ELECT\E-52.DWG 03-FEB-2011 15:30 JOBETL

KSC FORM 1-11 (REV. 3/76) (C/G 3/93)

EAR 99

FOR ANY PURPOSE OTHER THAN IN CONNECTION WITH A DEFINITELY RELATED GOVERNMENT PROCUREMENT OPERATION, THE UNITED STATES GOVERNMENT THEREBY INCURS NO RESPONSIBILITY NOR ANY OBLIGATION WHATSOEVER; AND THE FACT THAT THE GOVERNMENT MAY HAVE FORMULATED, FURNISHED, OR IN ANY WAY SUPPLIED THE SAID DRAWINGS, SPECIFICATIONS OR ANY OTHER DATA IS NOT TO BE REGARDED BY IMPLICATION OR OTHERWISE IN ANY MANNER LICENSING THE HOLDER OR ANY OTHER PERSONS OR CORPORATION, OR CONVEYING ANY RIGHTS OR PERMISSION TO MANUFACTURE, USE, OR SELL ANY PATENTED INVENTION THAT IN ANY WAY BE RELATED THERETO.

EAR 99 – NO LICENSE REQUIRED

The information contained in this document is technical in content, but not technical data as defined by the International Traffic in Arms (ITAR) or the Export Administration Regulations (EAR), and therefore is EAR 99 NLR, meaning no license required, suitable for public release. (General Prohibition Six (Embargo) applies to all items subject to the EAR, i.e. items on the CCL and within EAR 99 NLR. You may not make an export or reexport contrary to the prohibitions of part 746 (Embargos and Other Special Controls) of the EAR and 22 CFR part 126.1 of the ITAR).

EDDR # 113043 : NASA KSC Export Control Office (321-867-6039)

EAR 99

SPECIFIC NOTES:

A. POS=CU=BLUE
NEG=NiCu=RED

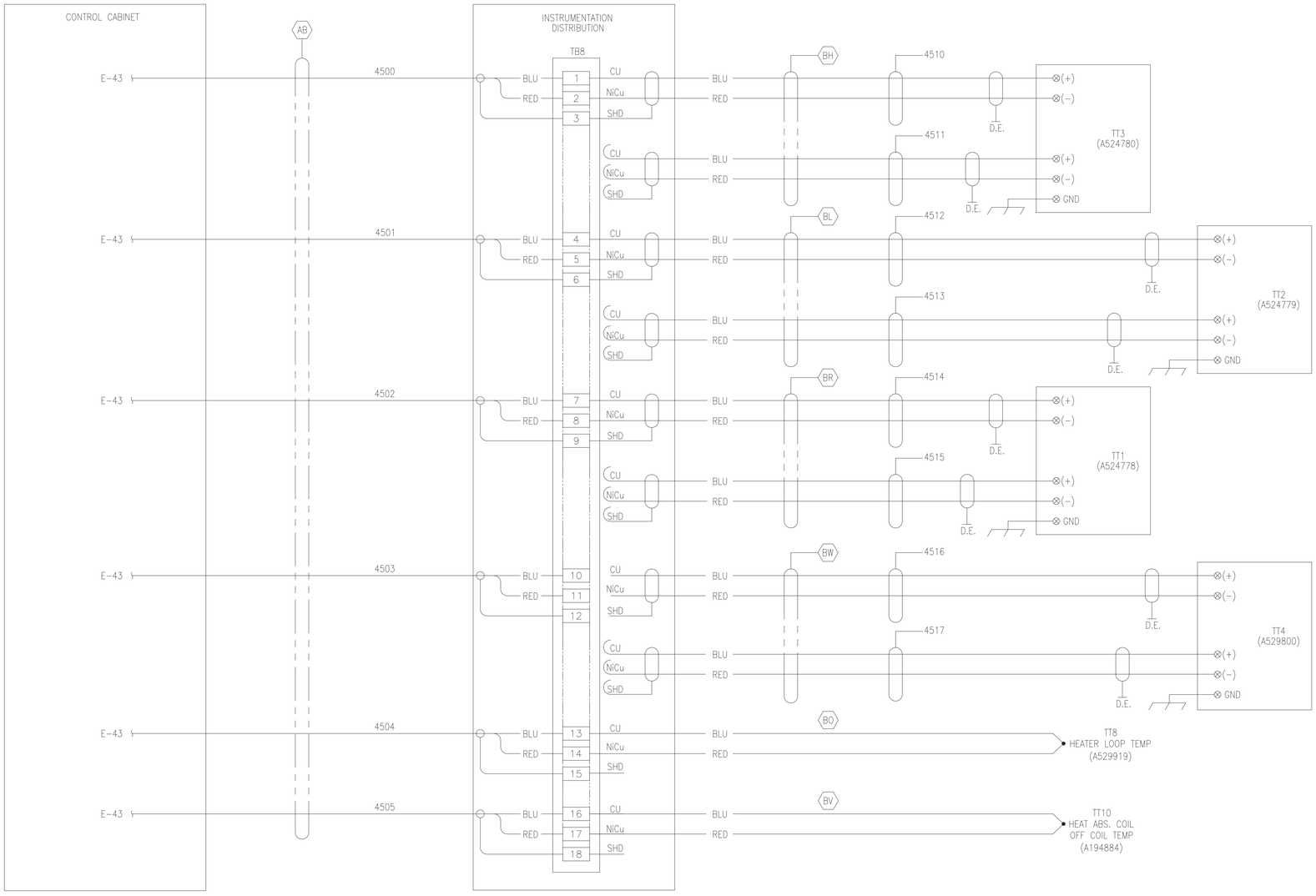

SYM	ZONE	DESCRIPTION	DATE	APPROVAL
REVISIONS				

SIGNATURES		DATE
DRAFTER	T. JOBE	05/06/11
CHECKER	J. WHITEFORD	05/06/11
ENGINEER	S. RITTER	05/06/11
	R. WITHERSPOON	05/06/11
	R. FRANCO	05/06/11
SUBMITTED	T.O. ADAMS	05/06/11
APPROVED	E.A. THAXTON	05/06/11

NATIONAL AERONAUTICS AND SPACE ADMINISTRATION
JOHN F. KENNEDY SPACE CENTER, NASA
KENNEDY SPACE CENTER, FLORIDA

ASSEMBLY DRAWINGS

MPPU REFURBISHMENT DESIGN
ENVIRONMENTAL CONTROL SYSTEM
WIRING DIAGRAM
TEMPERATURE MEASUREMENTS

SIZE F | DWG. NO. 584F0301001 | REV —

TITLE | PROJ. NO. 95255 | SHEET | OF

E-53

EAR 99

KSC FORM 1-11 (REV. 3/76) (C/G 3/93)

FOR ANY PURPOSE OTHER THAN IN CONNECTION WITH A DEFINITELY RELATED GOVERNMENT PROCUREMENT OPERATION, THE UNITED STATES GOVERNMENT THEREBY INCURS NO RESPONSIBILITY NOR ANY OBLIGATION WHATSOEVER, AND THE FACT THAT THE GOVERNMENT MAY HAVE FORMULATED, FURNISHED, OR IN ANY WAY SUPPLIED THE SAID DRAWINGS, SPECIFICATIONS OR ANY OTHER DATA IS NOT TO BE REGARDED BY IMPLICATION OR OTHERWISE IN ANY MANNER LICENSING THE HOLDER OR ANY OTHER PERSONS OR CORPORATION, OR CONVEYING ANY RIGHTS OR PERMISSION TO MANUFACTURE, USE, OR SELL ANY PATENTED INVENTION THAT IN ANY WAY BE RELATED THERETO.

EAR 99 - NO LICENSE REQUIRED

The information contained in the document is technical in content, but not technical data as defined by the International Traffic in Arms Regulations (ITAR) or the Export Administration Regulations (EAR), and therefore is EAR 99 NLR, no export license required, suitable for public release. (General Prohibition Six (Embargo) applies to all items subject to the EAR, i.e. items on the CCL and within EAR 99 NLR. You may not make an export or reexport contrary to the provisions of part 746 (Embargos and Other Special Controls) of the EAR and 22 CFR part 126.1 of the ITAR).

EDDR # 113043 : NASA KSC Export Control Office (321- 867-6009)

EAR 99

SPECIFIC NOTES:

A. BULKHEAD CONNECTORS LOCATED ON CONTROL ENCLOSURE DOOR BENEATH PANEL VIEW. SEE E-20 FOR DETAILS.

B. GRACE PORT LOCATED ON ENCLOSURE DOOR.

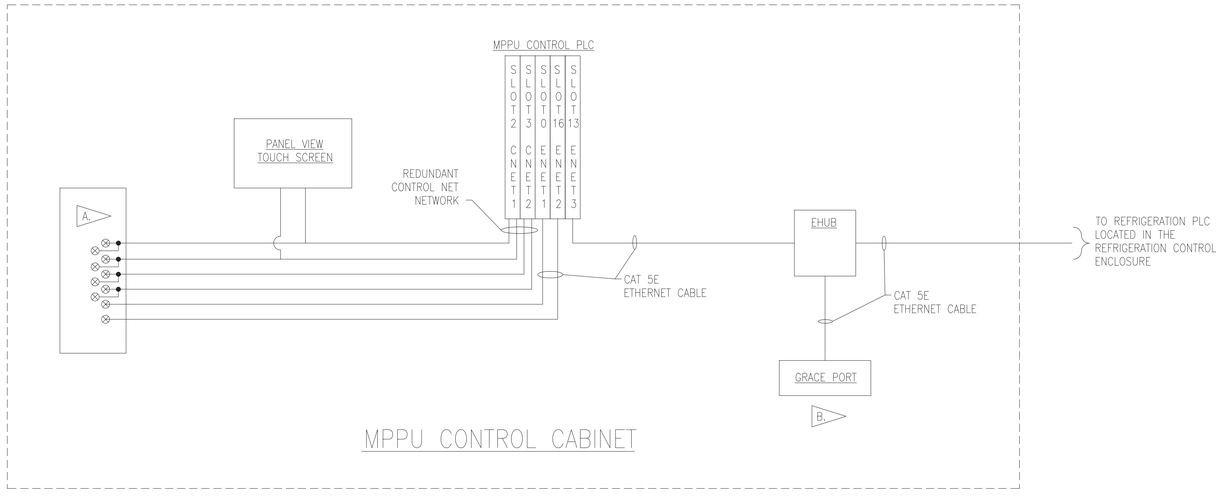

SYM	ZONE	DESCRIPTION	DATE	APPROVAL

REVISIONS

SIGNATURES		DATE
DRAFTER	T. JOBE	05/06/11
CHECKER	J. WHITEFORD	05/06/11
ENGINEER	S. RITTER	05/06/11
	R. WITHERSPOON	05/06/11
	R. FRANCO	05/06/11
SUBMITTED	T.O. ADAMS	05/06/11
APPROVED	E.A. THAXTON	05/06/11
TITLE		

NATIONAL AERONAUTICS AND SPACE ADMINISTRATION
JOHN F. KENNEDY SPACE CENTER, NASA
KENNEDY SPACE CENTER, FLORIDA

ASSEMBLY DRAWINGS

MPPU REFURBISHMENT DESIGN
ENVIRONMENTAL CONTROL SYSTEM
COMMUNICATIONS BLOCK DIAGRAM

SIZE F | DWG. NO. 584F0301001 | REV –

PROJ. NO. 95255 | SHEET OF

E-54

P:\95255\DRAWINGS\ELECT\E-54.DWG 03-MAY-2011 17:06 JOBETL

KSC FORM 1-11 (REV. 3/76) (C/G 3/93)

EAR 99

FOR ANY PURPOSE OTHER THAN IN CONNECTION WITH A DEFINITELY RELATED GOVERNMENT PROCUREMENT OPERATION, THE UNITED STATES GOVERNMENT THEREBY INCURS NO RESPONSIBILITY NOR ANY OBLIGATION WHATSOEVER; AND THE FACT THAT THE GOVERNMENT MAY HAVE FORMULATED, FURNISHED, OR IN ANY WAY SUPPLIED THE SAID DRAWINGS, SPECIFICATIONS OR ANY OTHER DATA IS NOT TO BE REGARDED BY IMPLICATION OR OTHERWISE IN ANY MANNER LICENSING THE HOLDER OR ANY OTHER PERSONS OR CORPORATION, OR CONVEYING ANY RIGHTS OR PERMISSION TO MANUFACTURE, USE, OR SELL ANY PATENTED INVENTION THAT IN ANY WAY BE RELATED THERETO.

EAR 99 – NO LICENSE REQUIRED

The Information contained in this document is technical in content, but not technical data as defined by the International Traffic in Arms (ITAR) or the Export Administration Regulations (EAR), and therefore is EAR 99 NLR, no export license required, suitable for public release. (General Prohibition Six (Embargo) applies to all items subject to the EAR, i.e. items on the CCL and within EAR 99 NLR. You may not make an export or reexport contrary to the provisions of part 746 (Embargos and Other Special Controls) of the EAR and 22 CFR part 126.1 of the ITAR).

EDDR # 113043 : NASA KSC Export Control Office (321- 867-9209)

SPECIFIC NOTES:

A. REMOVABLE TERMINAL BLOCK HOUSING FOR PLC CARD IS OF TYPE ALLEN BRADLEY P/N 1756-TBNH.

B. ALL INPUT CHANNELS ARE WIRED FOR 0-20 MA INPUT SIGNALS.

C. ATP-7 JUMPERS ARE 20 POLE CUT TO FIT BRIDGES OF TYPE PHOENIX CONTACT FBS20-5 P/N 3030226.

D. USE FERRULES TO TERMINATE ALL WIRES TO ATP-7.

E. UNLESS OTHERWISE SPECIFIED USE 16AWG STRANDED WIRE.

F. SEE DRAWING E-2 FOR WIRE NUMBERING & TYPE SCHEDULE.

G. THIS AI CARD SHALL BE USED BY KSC FOR FUTURE EXTERNAL INTERFACE. THIS CARD SHALL NOT BE USED BY SUBCONTRACTOR FOR LOCAL CONTROL.

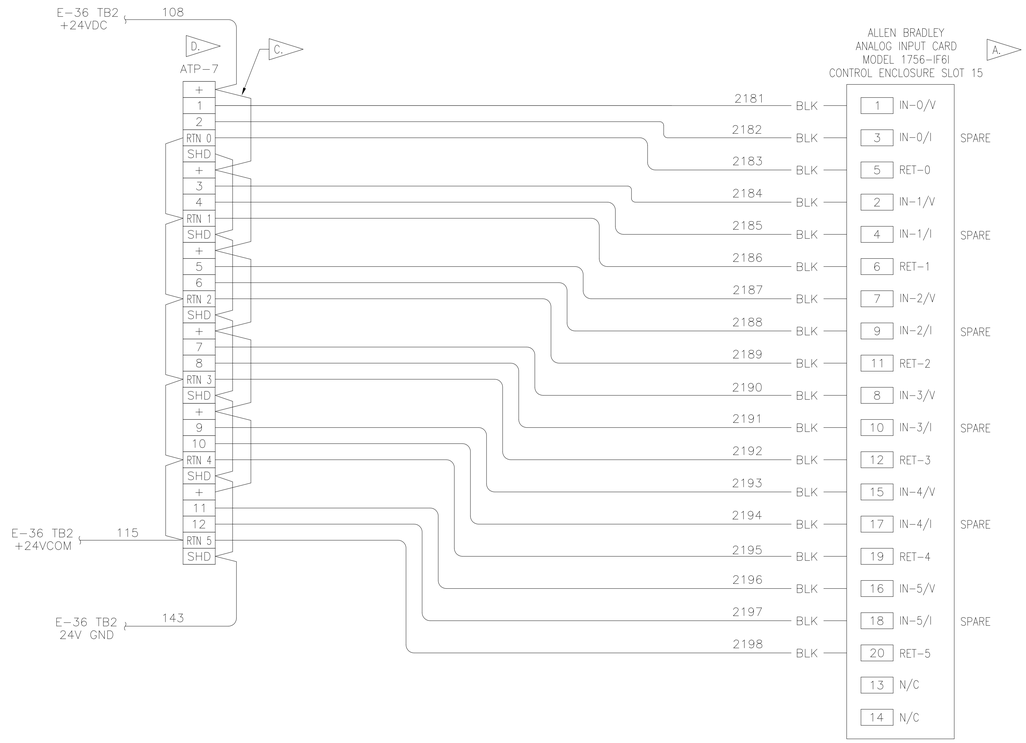

SYM	ZONE	DESCRIPTION	DATE	APPROVAL
		REVISIONS		

SIGNATURES		DATE
DRAFTER	T. JOBE	05/06/11
CHECKER	J. WHITEFORD	05/06/11
ENGINEER	S. RITTER	05/06/11
	R. WITHERSPOON	05/06/11
	R. FRANCO	05/06/11
SUBMITTED	T.O. ADAMS	05/06/11
APPROVED	E.A. THAXTON	05/06/11

NATIONAL AERONAUTICS AND SPACE ADMINISTRATION
JOHN F. KENNEDY SPACE CENTER, NASA
KENNEDY SPACE CENTER, FLORIDA

ASSEMBLY DRAWINGS

MPPU REFURBISHMENT DESIGN ENVIRONMENTAL CONTROL SYSTEM PLC WIRING DIAGRAM – SLOT 15

SIZE	DWG. NO.	REV
F	584F0301001	–
PROJ. NO.	95255	SHEET OF

TITLE

E-55

KSC FORM 1-11 (REV. 3/76) (C/G 3/93)