FOR ANY PURPOSE OTHER THAN IN CONNECTION WITH A DEFINITELY RELATED GOVERNMENT PROCUREMENT OPERATION, THE UNITED STATES GOVERNMENT THEREBY INCURS NO RESPONSIBILITY NOR ANY OBLIGATION WHATSOEVER; AND THE FACT THAT THE GOVERNMENT MAY HAVE FORMULATED, FURNISHED, OR IN ANY WAY SUPPLIED THE SAID DRAWINGS, SPECIFICATIONS OR ANY OTHER DATA IS NOT TO BE REGARDED BY IMPLICATION OR OTHERWISE IN ANY MANNER LICENSING THE HOLDER OR ANY OTHER PERSONS OR CORPORATION, OR CONVEYING ANY RIGHTS OR PERMISSION TO MANUFACTURE, USE, OR SELL ANY PATENTED INVENTION THAT MAY IN ANY WAY BE RELATED THERETO.

EAR 99 - NO LICENSE REQUIRED

The information contained in the documents individually or generic, but not limited thereto, is defined by the International Traffic in Arms Regulations (ITAR) or the Export Administration Regulations (EAR), and therefore is EAR 99 N.L.R. no export license required, subject to JAMS Export Control Office (ECO) approval. Export of this information is subject to the Export Control Reform (ECR) and ITAR 22 N.L.R. You may not make an export in violation contrary to the provisions of part 740, Embargoes and Other Special Controls, of the EAR and 22 CFR part 120.1 of the ITAR.

EDM-4.11.Rev1 ecl.04.ECC Export Control Office (ECO) INT-0206

EAR 99

GENERAL NOTES:

1. SEE DRAWING S-1 FOR GENERAL NOTES.

SPECIFIC NOTES:

A. IF UTILIZED, REMOVE BACKING BARS AND WELD TABS PER AWS D1.1 REQUIREMENTS FOR DYNAMICALLY LOADED STRUCTURES.

B. FIELD VERIFY ANGLE RELOCATION WITH PLENUM SUPPORT.

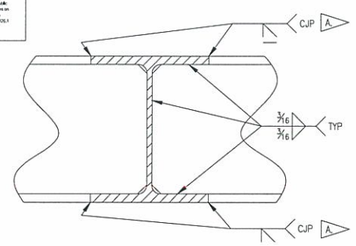

SECTION P (TYPICAL)
SCALE: 3"=1'-0"

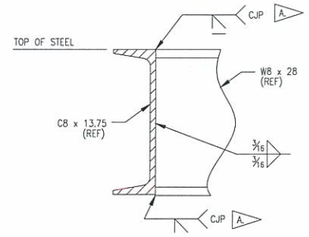

SECTION R (TYPICAL)
SCALE: 3"=1'-0"

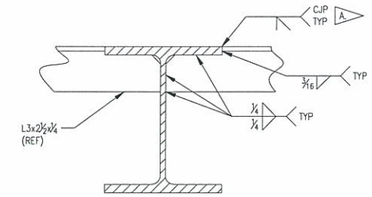

SECTION S (TYPICAL)
SCALE: 3"=1'-0"

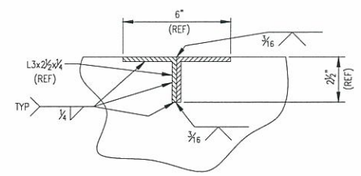

SECTION T (TYPICAL)
SCALE: 3"=1'-0"

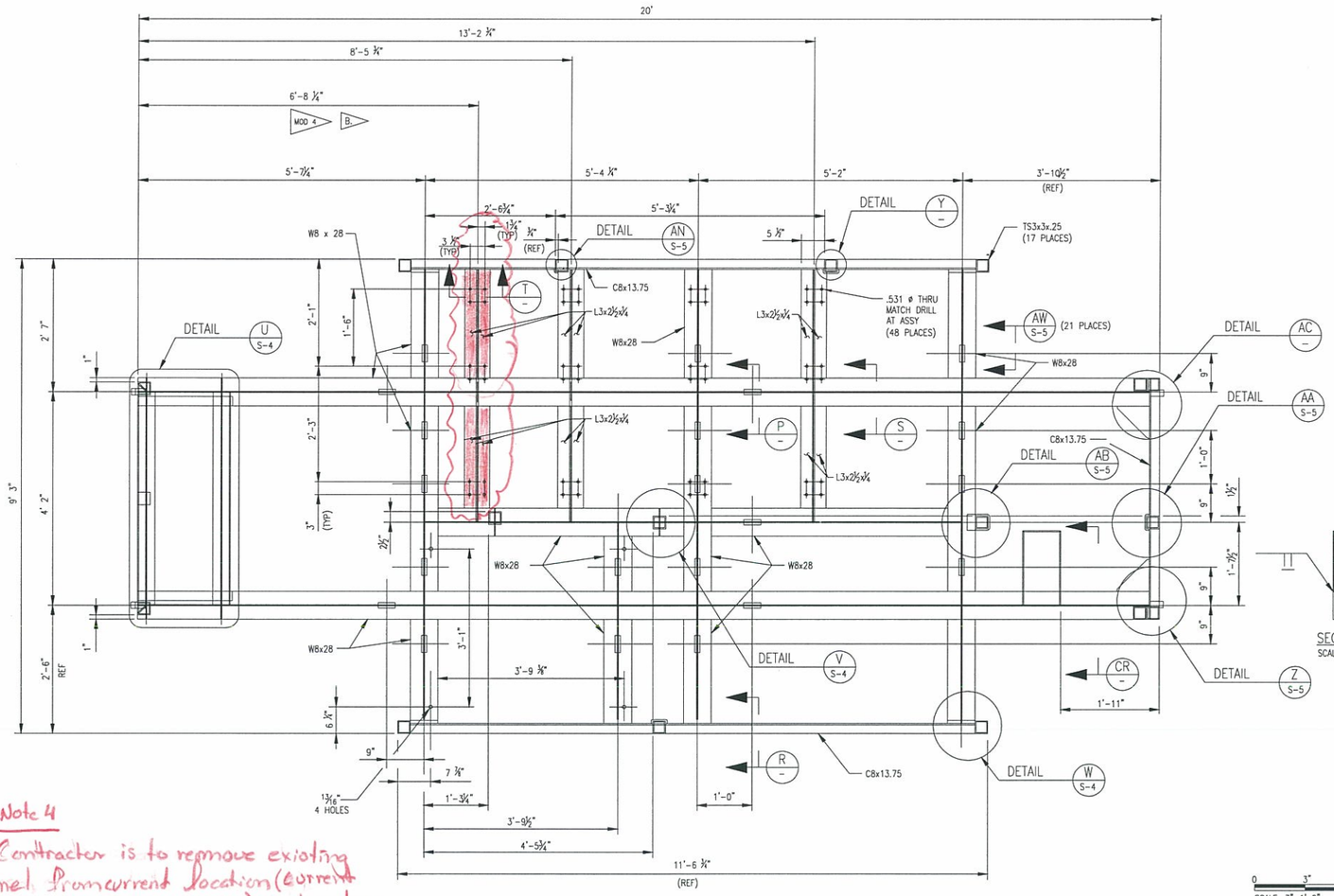

SECTION A
SCALE: 1"=1'-0"

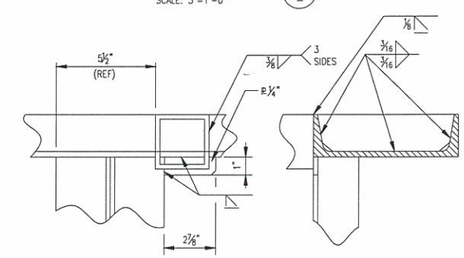

DETAIL Y
SCALE: 3"=1'-0"

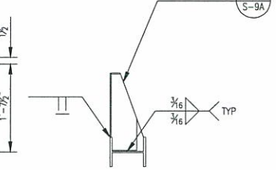

SECTION CR
SCALE: 1"=1'-0"

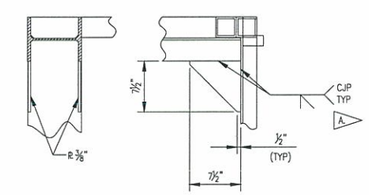

DETAIL AC
SCALE: 1 1/2"=1'-0"

Mod Note 4

Contractor is to remove existing channel from current location (current location is slightly to the right) and replace with new channels at the designated location. Mounting holes and locations must be verified for the new location to match the modified ducting.

0 3" 6" 9" 12"
SCALE: 3"=1' 0"

1' 0 1'
SCALE: 1½"=1' 0"

1' 0 1' 2'
SCALE: 1"=1' 0"

SYM	ZONE	DESCRIPTION	DATE	APPROVAL
		REVISIONS		

SIGNATURES		DATE
DRAFTER	T. JOBE	05/06/11
CHECKER	D. MAY	05/06/11
ENGINEER	A. JACQUES	05/06/11
	R. WITHERSPOON	05/06/11
	R. FRANCO	05/06/11
SUBMITTED	T.O. ADAMS	05/06/11
APPROVED	E.A. THAXTON	05/06/11

NATIONAL AERONAUTICS AND SPACE ADMINISTRATION
JOHN F. KENNEDY SPACE CENTER, NASA
KENNEDY SPACE CENTER, FLORIDA

ASSEMBLY DRAWINGS
MPPU REFURBISHMENT DESIGN
ENVIRONMENTAL CONTROL SYSTEM
STRUCTURAL FRAMING

SIZE F | DWG. NO. 584F0301001 | REV –
TITLE | PROJ. NO. 95255 | SHEET | OF
P:\95255\DRAWINGS\584-S-3.DWG | 21-FEB-2011 08:18 | JOBETL

S-3

EAR 99

KSC FORM 1-11 (REV. 3/93) (C/C 3/93)

FOR ANY PURPOSE OTHER THAN IN CONNECTION WITH A DEFINITELY RELATED GOVERNMENT PROCUREMENT OPERATION, THE UNITED STATES GOVERNMENT THEREBY INCURS NO RESPONSIBILITY NOR ANY OBLIGATION WHATSOEVER; AND THE FACT THAT THE GOVERNMENT MAY HAVE FORMULATED, FURNISHED, OR IN ANY WAY SUPPLIED THE SAID DRAWINGS, SPECIFICATIONS OR ANY OTHER DATA IS NOT TO BE REGARDED BY IMPLICATION OR OTHERWISE IN ANY MANNER LICENSING THE HOLDER OR ANY OTHER PERSON OR CORPORATION, OR CONVEYING ANY RIGHTS OR PERMISSION TO MANUFACTURE, USE, OR SELL ANY PATENTED INVENTION THAT MAY IN ANY WAY BE RELATED THERETO.

EAR 99 - NO LICENSE REQUIRED

The information contained in the documents (software, data, and technical data as defined by the International Traffic in Arms Regulations (ITAR) or the Export Administration Regulations (EAR), and transferred to EAR 99 NLR, no export license required, subject to public release under ITAR § 125.4(b)(13). Technology subject to all terms subject to the EAR, US laws, the EU, and other EAR 99 NLR, the Other Special Controls of the EAR and EU CP (part 774), prohibitions of part 740, Embargoes and Other Special Controls of the EAR and EU CP (part 123.1 of the ITAR).

ESCM # 11 Rev.1 - NASA KSC Export Control Office (321) 867-6290

EAR 99

SPECIFIC NOTES:

A. NOTATION "BS" INDICATES PIPE PLUG FLANGE ON BACK SIDE OF FRAME TUBE. FOR HOLE LOCATION AND INSTALLATION SEE DETAIL DF ON SHEET S-8.

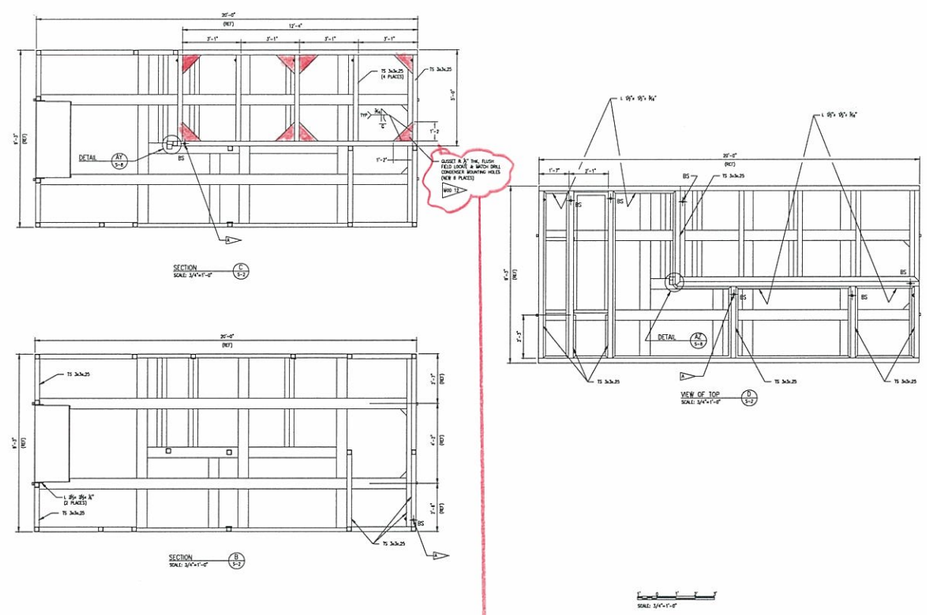

Contractor shall be responsible for furnishing and installing 1/2" thk gusset plates for mounting the condenser. Upon installation of the condenser, contractor shall the gussets to match the mounting holes in the condenser frame.

SYM	ZONE	DESCRIPTION	DATE	APPROVAL
		REVISIONS		

SIGNATURES		DATE
DRAFTER	T. JOBE	05/06/11
CHECKER	D. MAY	05/06/11
ENGINEER	A. JACQUES	05/06/11
	R. WITHERSPOON	05/06/11
	R. FRANCO	05/06/11
SUBMITTED	T.O. ADAMS	05/06/11
APPROVED	E.A. THAXTON	05/06/11

NATIONAL AERONAUTICS AND SPACE ADMINISTRATION
JOHN F. KENNEDY SPACE CENTER, NASA
KENNEDY SPACE CENTER, FLORIDA

ASSEMBLY DRAWINGS
MPPU REFURBISHMENT DESIGN
ENVIRONMENTAL CONTROL SYSTEM
STRUCTURAL FRAMING

SIZE F | DWG. NO. 584F0301001 | REV –

TITLE | PROJ. NO. 95255 | SHEET | OF

S-6

P:\95255\DRAWINGS\STRA\S-6.DWG 22-FEB-2011 12:56 JOBETL

KSC FORM 1-11 (REV. 3/76) (E/G 3/93)

EAR 99

FOR ANY PURPOSE OTHER THAN IN CONNECTION WITH A DEFINITELY RELATED GOVERNMENT PROCUREMENT OPERATION, THE UNITED STATES GOVERNMENT THEREBY INCURS NO RESPONSIBILITY NOR ANY OBLIGATION WHATSOEVER; AND THE FACT THAT THE GOVERNMENT MAY HAVE FORMULATED, FURNISHED, OR IN ANY WAY SUPPLIED THE SAID DRAWINGS, SPECIFICATIONS OR ANY OTHER DATA IS NOT TO BE REGARDED BY IMPLICATION OR OTHERWISE IN ANY MANNER VIOLATING THE HOLDER OF ANY OTHER PERSONS OR CORPORATIONS RIGHTS IN THE INVENTION, PATENTED OR OTHERWISE, NOR TO GRANT, VOID, OR SELL ANY PATENTED INVENTION THAT MAY IN ANY WAY BE RELATED THERETO.

EAR 99 - NO LICENSE REQUIRED

The information contained in this document is controllable content, but not technical data as defined by the International Traffic in Arms Regulations (ITAR) or the Export Administration Regulations (EAR), and therefore is EAR 99 NLR, no export license required, subject to posting restrictions on US Government-funded public websites. Export of this data is governed by the CCL and EAR (15 CFR 730-774), they may not make an export or reexport contrary to the provisions of part 744 (E Haiti and Other Special Controls) of the EAR and 22 CFR part 120.1 of the ITAR.

ECCN# 7.1.A.1 - ms.SA.KSC Export Control Office (321) 867-6236

Contractor is to provide mounting and sealing structure to support the condenser fan control enclosure.

EAR 99

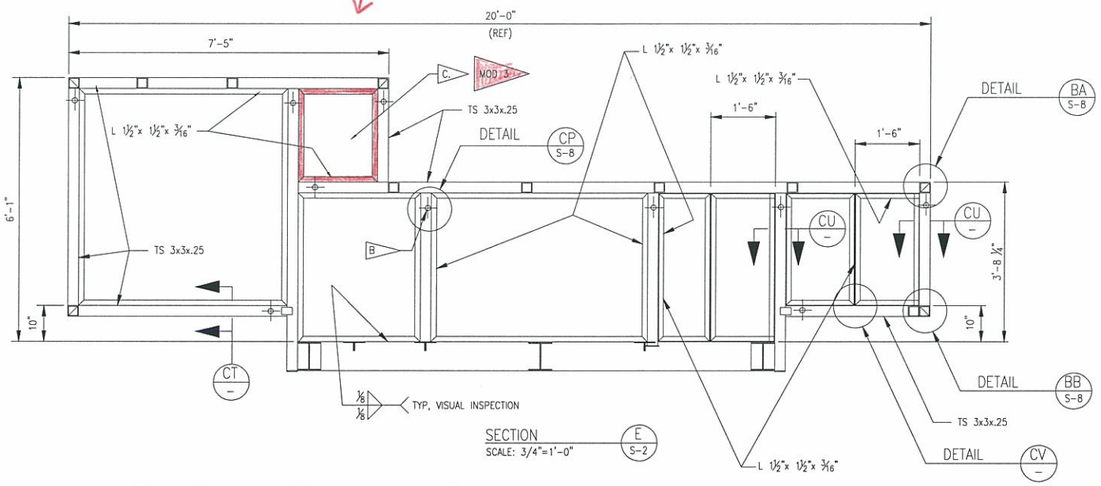

SECTION E S-2
SCALE: 3/4"=1'-0"

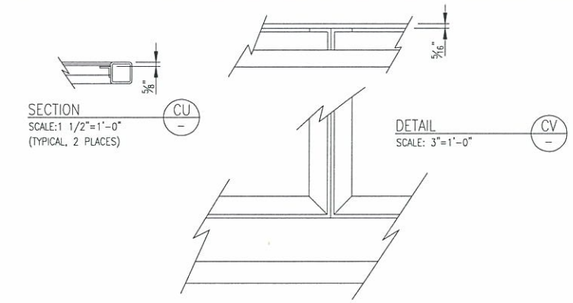

SECTION CU
SCALE:1 1/2"=1'-0"
(TYPICAL, 2 PLACES)

DETAIL CV
SCALE: 3"=1'-0"

SPECIFIC NOTES:

A. REFERENCE SECTIONS A, C, D & E FOR COMPLETE DIMENSIONING.

B. NOTATION "BS" INDICATES PIPE PLUG FLANGE ON BACK SIDE OF FRAME TUBE. FOR HOLE LOCATION AND INSTALLATION SEE DETAIL CP ON SHEET S-8.

C. MODIFY/REPLACE SECONDARY SUPPORTS IN ACCORDANCE W/CONDENSER FAN CONTROL ENCLOSURE (SPEC SECTION 11820).

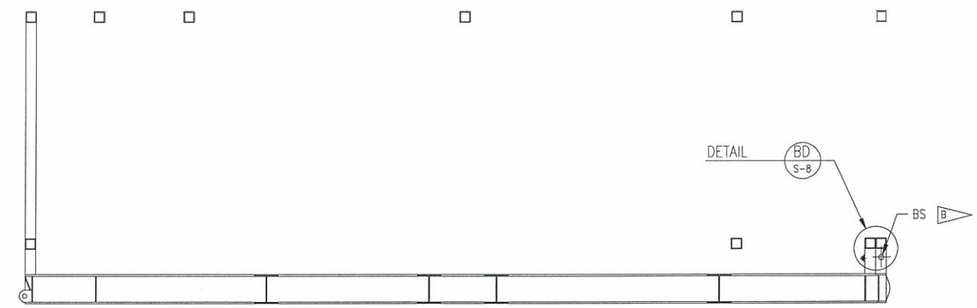

SECTION H S-2
SCALE: 3/4"=1'-0"

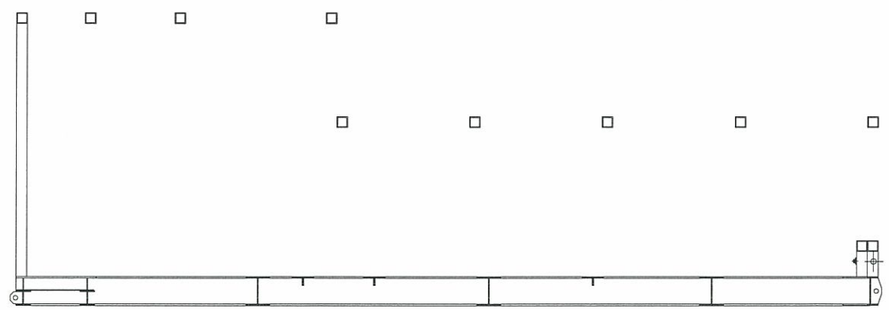

SECTION F S-2
SCALE: 3/4"=1'-0"

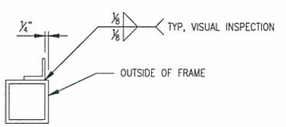

SECTION CT
SCALE: 3"=1'-0"

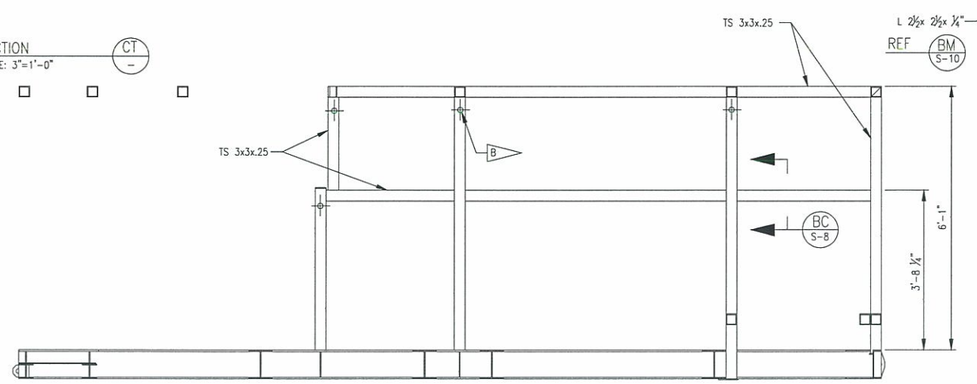

SECTION G S-2
SCALE: 3/4"=1'-0"

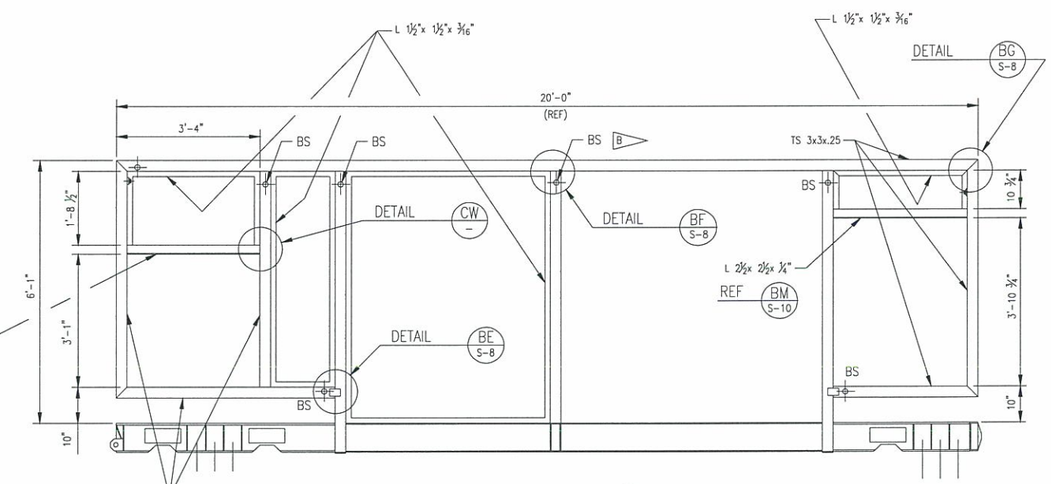

VIEW J S-2
SCALE: 3/4"=1'-0"

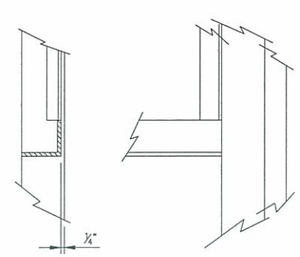

VIEW CW
SCALE: 3/4"=1'-0"

0 1'
SCALE: 3"=1'-0"

6 0 12 24
SCALE:1 1/2"=1'-0"

1' 0 1' 2' 3'
SCALE:3/4"=1'-0"

SYM	ZONE	DESCRIPTION	DATE	APPROVAL
		REVISIONS		

SIGNATURES		DATE
DRAFTER	T. JOBE	05/06/11
CHECKER	D. MAY	05/06/11
ENGINEER	A. JACQUES	05/06/11
	R. WITHERSPOON	05/06/11
	R. FRANCO	05/06/11
SUBMITTED	T.O. ADAMS	05/06/11
APPROVED	E.A. THAXTON	05/06/11

NATIONAL AERONAUTICS AND SPACE ADMINISTRATION
JOHN F. KENNEDY SPACE CENTER, NASA
KENNEDY SPACE CENTER, FLORIDA

ASSEMBLY DRAWINGS
MPPU REFURBISHMENT DESIGN
ENVIRONMENTAL CONTROL SYSTEM
STRUCTURAL FRAMING

SIZE F | DWG. NO. 584F0301001 | REV —
PROJ. NO. 95255 | SHEET | OF

S-7

TITLE

P:\KSC\DRAWINGS\STRUCT-7.DWG | 21-FEB-2011 08:47

KSC FORM 1-11 (REV. 3/78) (G/G 3/93)

EAR 99

FOR ANY PURPOSE OTHER THAN IN CONNECTION WITH A DEFINITELY RELATED GOVERNMENT PROCUREMENT OPERATION, THE UNITED STATES GOVERNMENT THEREBY INCURS NO RESPONSIBILITY NOR ANY OBLIGATION WHATSOEVER; AND THE FACT THAT THE GOVERNMENT MAY HAVE FORMULATED, FURNISHED, OR IN ANY WAY SUPPLIED THE SAID DRAWINGS, SPECIFICATIONS OR ANY OTHER DATA IS NOT TO BE REGARDED BY IMPLICATION OR OTHERWISE IN ANY MANNER LICENSING THE HOLDER OR ANY OTHER PERSON OR CORPORATION, OR CONVEYING ANY RIGHTS OR PERMISSION TO MANUFACTURE, USE, OR SELL ANY PATENTED INVENTION THAT MAY IN ANY WAY BE RELATED THERETO.

EAR 99 – NO LICENSE REQUIRED

The information contained in this document is controlled by content, but is identified here as defined by the International Traffic in Arms Regulations (ITAR) or the Export Administration Regulations (EAR), and therefore is EAR 99 NLR, no export license required, subject to such controls as may be imposed by the Department of Commerce, Bureau of Industry and Security (BIS) on the CCL and other EAR 99 NLR. You may not have an export or reexport relationship that violates the provisions of part 740.9 Reexports and Other Special Controls of the EAR and 22 CFR part 125.1 of the ITAR.

EDGA # 77-041 AKSA KSC Export Control Office 321-867-6266

EAR 99

SPECIFIC NOTES:

A. CONTRACTOR SHALL ACCOMPLISH DETAILED DESIGN OF SECONDARY SUPPORT MEMBERS, SUGGESTED CONFIGURATIONS ARE SHOWN. DESIGN LOADS ARE SHOWN ON SHEET S-12.

B. ALL SECONDARY MEMBER WELDS SHALL BE COMPLETELY SEALED SO THAT NO MOISTURE CAN PENETRATE JOINTS.

C. REF S-10A FOR WHEEL WELL DETAILS.

D. FABRICATOR SHALL VERIFY DIMENSION WITH REFRIGERATION CONTROL CABINET SELECTED & INSURE FITMENT OF EXISTING INLET DUCTING. (REF SPEC 11820, & DWG M-3).

E. SECONDARY STRUCTURE SHALL CLEAR AIR FILTER HOUSING. MATCH DRILL LOUVER SUPPORTS TO LOUVER FRAME.

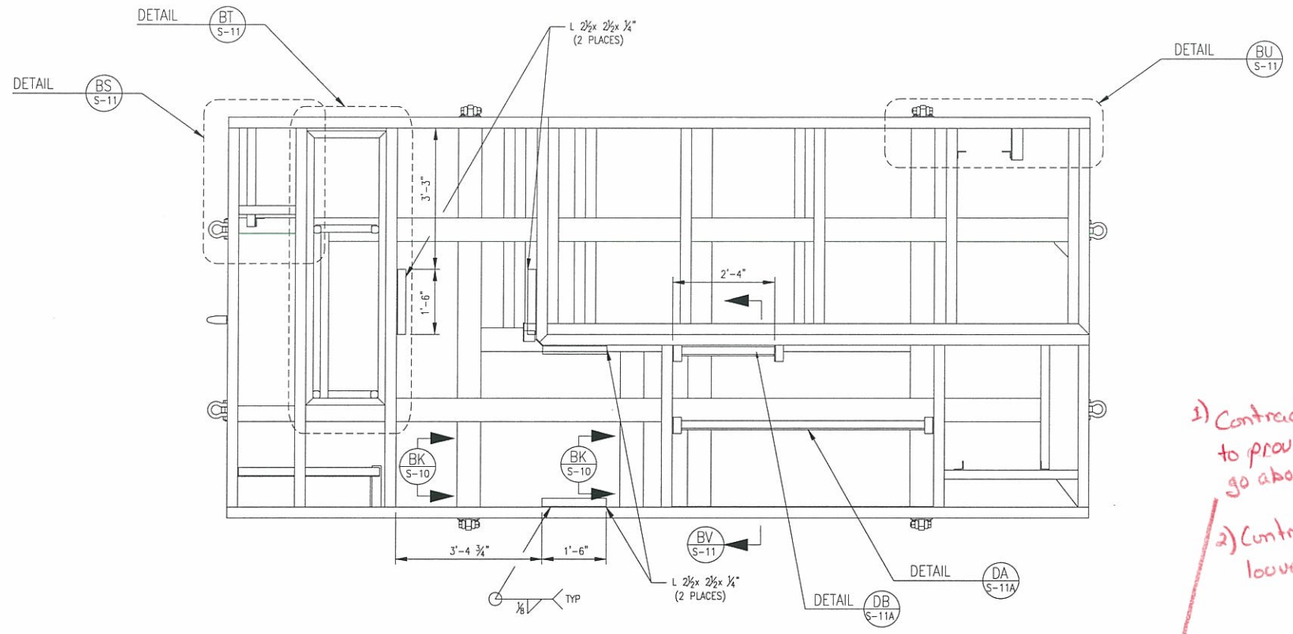

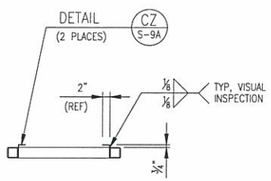

SECTION CY –

SCALE: 3/4"=1'-0"

1) Contractor shall provide L2"x2"x¼, L1½"x1½"x5/16", to provide mounting surface for the louver that is to go above the refrigeration control enclosure.

2) Contractor shall shorten/trim existing intake louver supports as shown

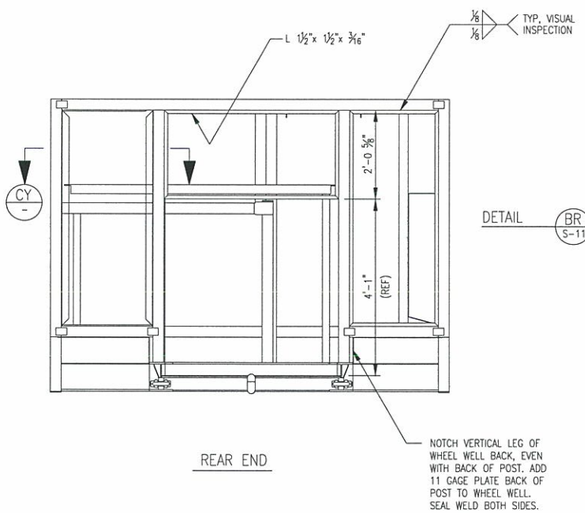

REAR END

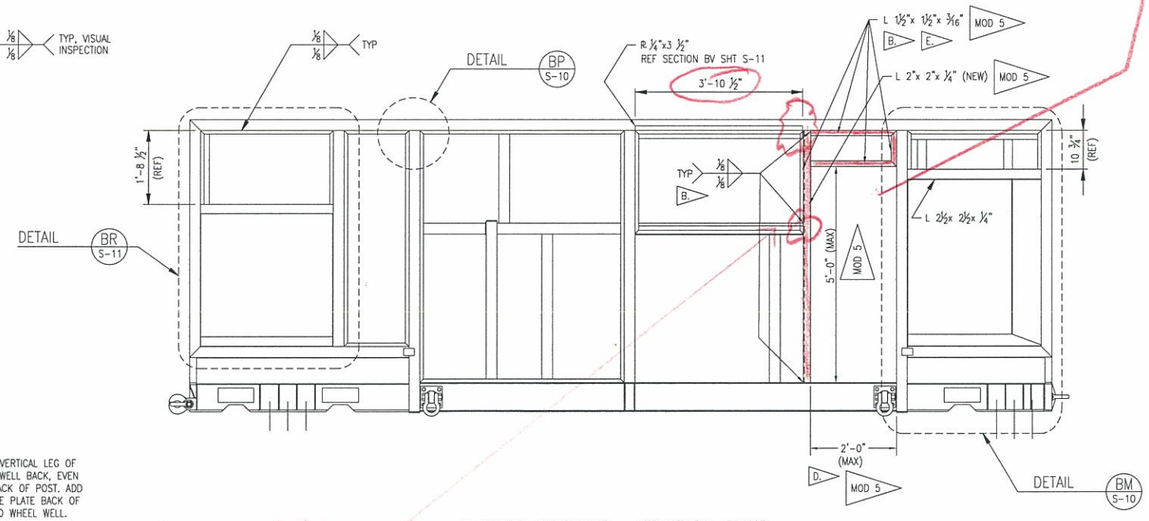

ELEVATION CURB SIDE – STRUCTURAL FRAME

DETAIL BJ S-2 A. B.

SCALE: 3/4"=1'-0"

WITH SECONDARY SUPPORT MEMBERS

Contractor shall trim existing angles that support the intake louvers to accomod

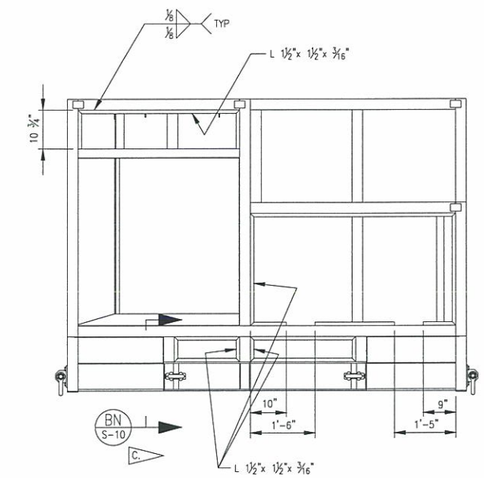

FRONT END

1' 0 1' 2' 3'

SCALE:3/4"=1' 0"

SYM	ZONE	DESCRIPTION	DATE	APPROVAL
		REVISIONS		

SIGNATURES		DATE
DRAFTER	T. JOBE	05/06/11
CHECKER	D. MAY	05/06/11
ENGINEER	A. JACQUES	05/06/11
	R. WITHERSPOON	05/06/11
	R. FRANCO	05/06/11
SUBMITTED	T.O. ADAMS	05/06/11
APPROVED	E.A. THAXTON	05/06/11

NATIONAL AERONAUTICS AND SPACE ADMINISTRATION
JOHN F. KENNEDY SPACE CENTER, NASA
KENNEDY SPACE CENTER, FLORIDA

ASSEMBLY DRAWINGS

MPPU REFURBISHMENT DESIGN
ENVIRONMENTAL CONTROL SYSTEM
STRUCTURAL FRAMING

SIZE F | DWG. NO. 584F0301001 | REV –

PROJ. NO. 95255 | SHEET | OF

TITLE

S-9

P:\95255\DRAWING\STRA\S-9.DWG 21-FEB-2011 13:33

KSC FORM 1-11 (REV. 3/93) (E/G 3/93)

EAR 99