ITEM NO.	QTY.	PART NO.	DESCRIPTION
1	1	081105101 BASE FRAME	081105101
2	1	081105153 LATHE BASE PLATE	081105153
3	1	081105151 LATHE HEADSTOCK	081105151
4	2	081105152 LATHE SPINDLE	081105152
5	1	7 X 28 MANDREL	MAX SIZE MANDREL
6	2	DEAD CENTER MT#2	REID TOOL #DC-11011
7	2	081105102 PIVOT BLOCK	081105102
8	2	081105103 LOCK BLOCK	081105103
9	1	081105104 LINEAR BASE	081105104
10	2	SH SHLDR SCR .75 X 1.25	MCMASTER 91259A125
11	6	IKO RAIL 25MM	IKO LWH25R820BHS2
12	10	LINEAR CAR	IKO MHT25C1HS2
13	1	081105106 CAR BASE LAP	081105106
14	44	SHCS M8 X 40	MCMASTER 95263A675
15	1	081105107 TAILSTOCK POST	081105107
16	1	081105108 TAILSTOCK CAR	081105108
17	1	081105109 TAILSTOCK RISER	081105109
18	1	081105150 BEARING BLOCK	081105150
19	1	081105147 TAILSTOCK SCREW	081105147
20	1	081105110 TAILSTOCK NUT	081105110
21	1	081105124 STROKE SCREW	081105124
22	2	BRONZE BRG .75 X .875 X 1.00	MCMASTER 6381K171
23	6	WASHER FIXTURING .50 X 1.25	MCMASTER 98029A033
24	6	SHCS .5-13 X 1.75	MCMASTER 90128A718
25	1	COLLAR 1-14UNF	MCMASTER 6438K31
26	90	SHCS .25-20 X 1.00	MCMASTER 90128A247
27	2	DOWEL PIN .375 X 1.00	MCMASTER 98381A624
28	1	gearmotor 0.13 hp 94 RPM	MCMASTER 6470K86
29	2	081105113 MOTOR BASE SLIDE	081105113
30	1	DC GEARMOTOR 0.5 HP	MCMASTER 6470K55
31	1	081105114 MOTOR BASE	081105114
32	1	acme screw jack 4.0	MCMASTER 62255K161
33	1	081105115 JACK BASE	081105115
34	1	081105117 TILT RAIL	081105117
35	1	081105118 TILT TIP	081105118
36	1	SET SCR #10-32 X .31 NYLON TIP	MCMASTER 94115A826
37	4	ANG CONT BRG SEALED 30MM	MCMASTER 6680K41
38	1	ES31-0037-01_P-end_Lap	
39	1	081105119 SPINDLE ADAPTER SMALL	081105119
40	1	00060406 FACE PLATE	00060406
41	1	081105120 SPINDLE ADAPTER LARGE	081105120
42	1	08115148 MOD COLLAR 1-14	081105148
43	1	QD BUSHING JA X .75	MCMASTER 6086K113
44	1	TIMING PULLEY L-20	MCMASTER 6495K212
45	1	QD BUSHING SDS X .75	MCMASTER 6086K313
46	1	TIMING PULLEY L-30	MCMASTER 6495K217
47	1	KEY .188 SQ X 1.0	MCMASTER 98870A140
48	4	8020 linear bearing	8020-40-6596
49	4	8020-linear brake L	8020-25-6850
50	2	DC MOTOR CONTROLLER	MCMASTER 7793K52
51	1	081105121 CONTROL BRACKET	081105121
52	1	081105122 STROKE MOTOR BKT	081105122
53	3	HANDWHEEL 4.5	MCMASTER 6033K71
54	2	TACHOMETER	MCMASTER 14215T11
55	1	ELECTRIC ENCLOSURE 12 X 14 X 6	MCMASTER 7847K16
56	2	081105125 CORNER BRACKET	081105125
57	1	081105127 VERT CAR	081105127
58	3	FLANGE LINEAR DBL BRG .50	MCMASTER 6483K73
59	1	081105128 LAP DRIVE PLATE	081105128
60	6	WING SCR .313-18 X 1.5	MCMASTER 91185A967
61	10	WASHER THICK .313 X .68	MCMASTER 98370A017
62	3	081105129 LAP DRIVE ROD	081105129
63	1	081105111 LAP HINGE PLATE	081105111
64	2	WAVE WASHER .35 X .49	MCMASTER 9714K28
65	2	SHSHLDR SCR .313 X 1.75	MCMASTER 90298A589
66	2	BUSHING .312 X .375 X .50	MCMASTER 6391K153
67	2	081105130 BARREL NUT	081105130
68	33	SHCS .25-20 X 1.00 ZINC	MCMASTER 90128A247
69	12	SHCS #10-32 X .63 ZINC	MCMASTER 90128A944
70	1	timing belt 390L 104 teeth	MCMASTER 6484K157
71	1	081105131 BELT GUARD	081105131
72	1	081105132 BELT GUARD SIDE	081105132
73	14	THUMB SCREW .25-20 BRASS	MCMASTER 92421A535
74	1	FLEX SHAFT CPL .625 BORE	MCMASTER 9845T403 (2X) AND 9845T22
75	1	081105133 OSCILLATOR TOWER	081105133
76	2	ANG CONT BRG SEALED 20MM	MCMASTER 6680K38
77	1	COLLAR BRG .75-16	MCMASTER 6438K26
78	1	SHIM, .22 X .28 X .5 MMM	MCMASTER 98089A356
79	1	081105134 OSCILLATOR SHAFT	081105134
80	1	081105135 OSCILLATOR HEAD	081105135
81	1	SHCS .313-18 X 0.875 ZINC	MCMASTER 90128A582
82	1	081105136 OSCILLATOR SLIDE	081105136
83	1	081105137 OSCILLATOR CAP	081105137
84	9	WASHER NAS 620-C416	MCMASTER 90945A761
85	1	SHCS .25-20 X 1.5 ZINC	081105138
86	1	BELLVILLE .25 X .50 X .034	MCMASTER 9713K61
87	1	EXT RET RING .25	MCMASTER 98420A120
88	1	THUMB SCREW HEAD .25	MCMASTER 94052A133
89	2	SH SHLDR SCR 0.375 X 0.75	MCMASTER 91327A156
90	1	081105139 OSC POSITION PLATE	081105139
91	1	081105140 OSC FACE PLATE	081105140
92	1	SCALE, ADHESIVE, METRIC	MCMASTER 8965A61
93	1	081105142 NUT BLOCK	081105142
94	2	081105143 BEARING BLOCK	081105143
95	3	BEARING DBL 15 X 35 MM	MCMASTER 5885K4
96	2	081105144 LAP CAR GUSSET	081105144
97	1	081105141 LINK ASSY	081105141
98	1	SCALE, ADHESIVE, METRIC -SHORT	MCMASTER 8965A61
99	1	COOKIE TRAY QUARTER SHEET	
100	8	SHCS .313-18 X 1.5 ZINC	MCMASTER 90128A587
101	2	081105145 SPACER HANDLE	081105145
102	2	WASHER THICK .25 X .63	MCMASTER 98370A028
103	7	SHCS .25-20 X .63 ZINC	MCMASTER 90128A243
104	1	081105146 BRG PLATE	081105146
105	4	BHCS .25-20 X .50	MCMASTER 91306A375
106	11	SHCS .25-20 X 2.00 ZINC	MCMASTER 90128A253
107	3	FHCS .25-20 X .63	MCMASTER 91263A556
108	8	SHCS M8 X 25	MCMASTER 95263A633
109	2	SENSOR TACH	MCMASTER 1421T22
110	4	SHCS #6-32 X .5 ZINC	MCMASTER 90128A148
111	4	SHCS #6-32 X 1.0 ZINC	MCMASTER 90128A153
112	2	NUT HEX JAM .25-20	MCMASTER 91078A029
113	1	081105149 CROSS PLATE	081105149
114	8	SHCS .313-18 X 3.5 ZINC	MCMASTER 90128A597
115	2	SHCS .313-18 X .625 ZINC	MCMASTER 90128A580
116	6	SHCS .375-16 X 1.00 ZINC	MCMASTER 90128A624
117	18	SHCS #10-32 X 0.5 ZINC	MCMASTER 90128A942
118	4	LEVELLING FOOT .75-10	MCMASTER 6111K59
119	1	NUT, ACORN .313-18	MCMASTER 91875A140
120	2	spacer .38 x .75 dia x .25 lg	MCMASTER 93320A305
121	1	081105126 COVER	081105126
122	3	SHAFT COLLAR .50 QR	MCMASTER 1511K12

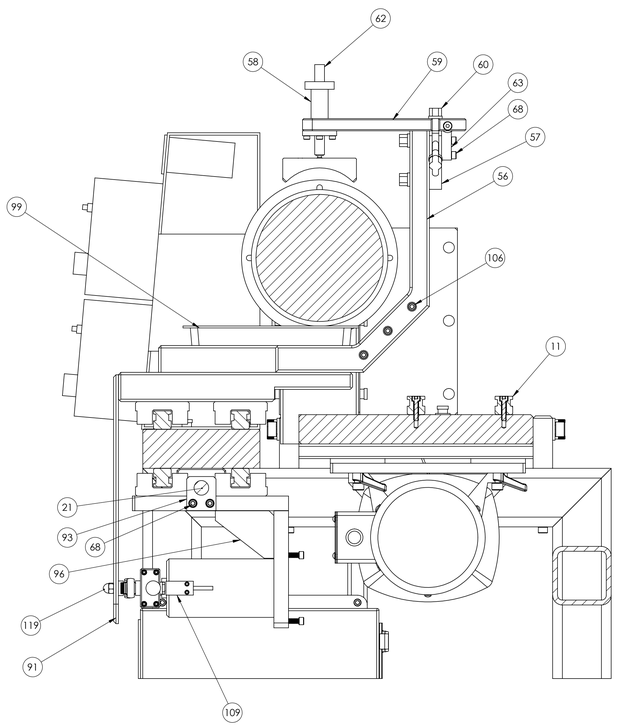

SECTION M-M

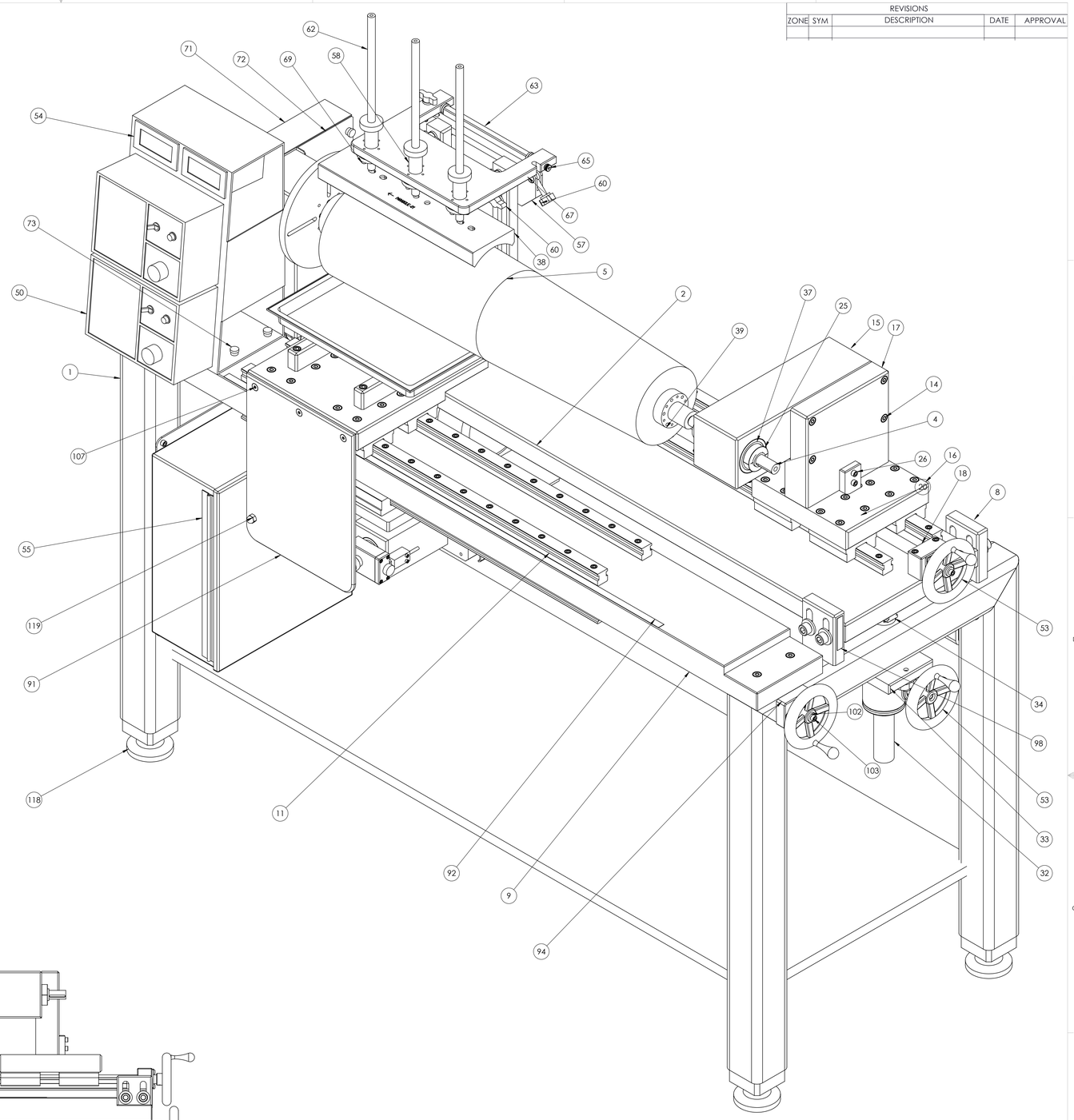

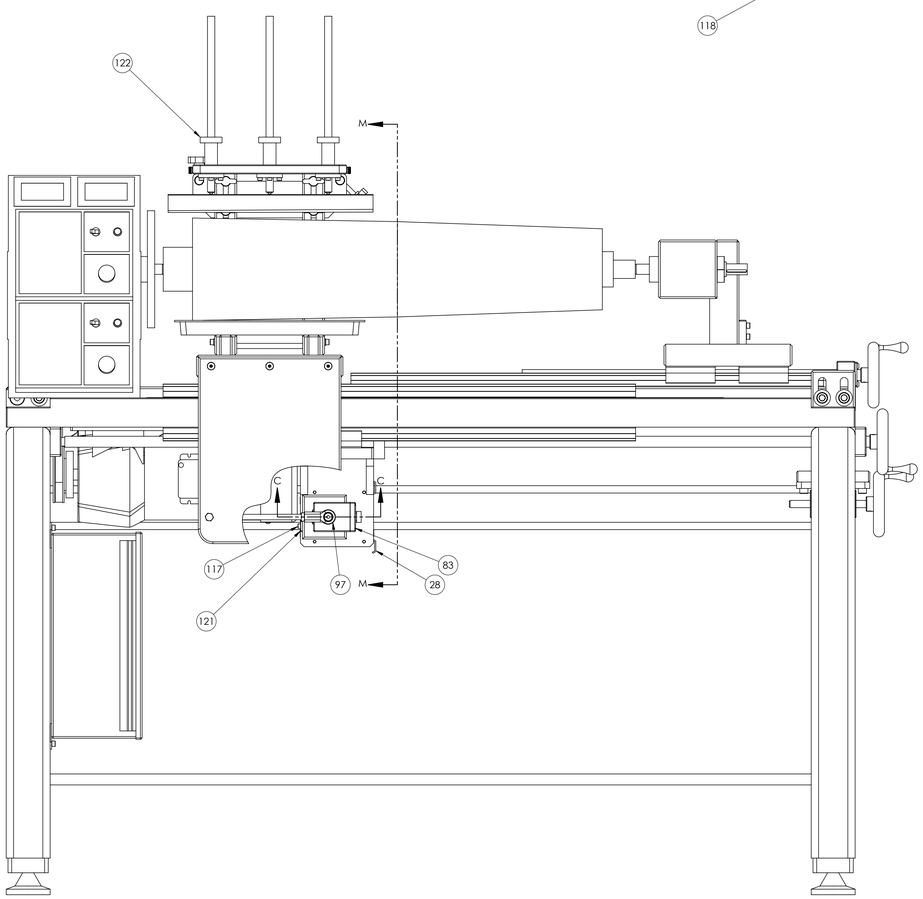

REVISIONS				
ZONE	SYM	DESCRIPTION	DATE	APPROVAL

081105100

SEE ENGINEERING RECORDS		TOLERANCE EXCEPT AS NOTED DIMENSIONS ARE IN INCHES DECIMAL .XX = ±0.020 .XXX = ±0.005 ANGLE .X= ±1°	ORIGINAL DATE OF DRAWING 9/10/10 DRAFTSMAN BCW STRESS ENGINEER BCW MNFG MATERIALS QA	LATHE TILT ASSY	GEORGE C. MARSHALL SPACE FLIGHT CENTER NATIONAL AERONAUTICS AND SPACE ADMINISTATION Marshall Space Flight Center, AL 35812	
		MATERIAL	CHECKER			
		HEAT TREAT	SUBMITTED		DWG SIZE E	081105100
NEXT ASSY	USED ON	FINAL FINISH	APPROVED	EST WT / SCALE 1:3	CODE 339B2	SHEET 1 OF 2
APPLICATION						

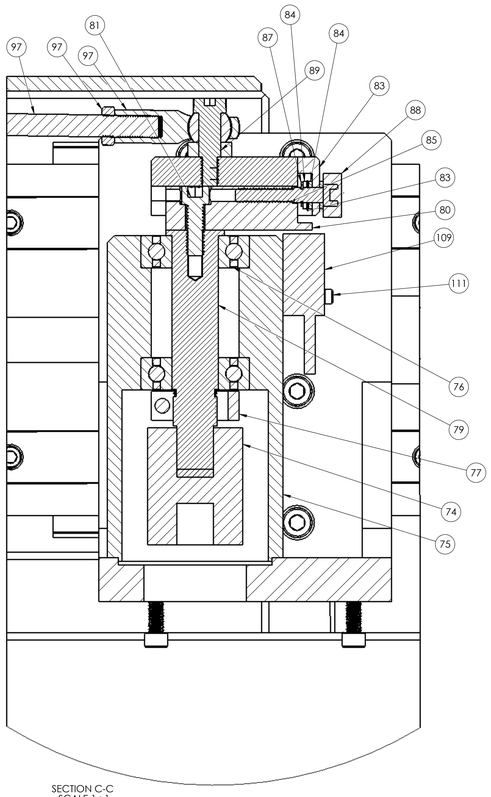

SECTION C-C
SCALE 1 : 1

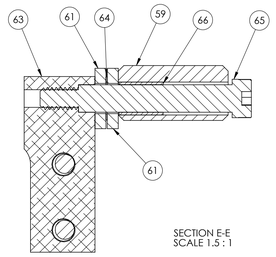

SECTION E-E
SCALE 1.5 : 1

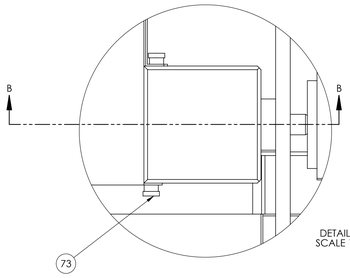

DETAIL A
SCALE 1 : 2

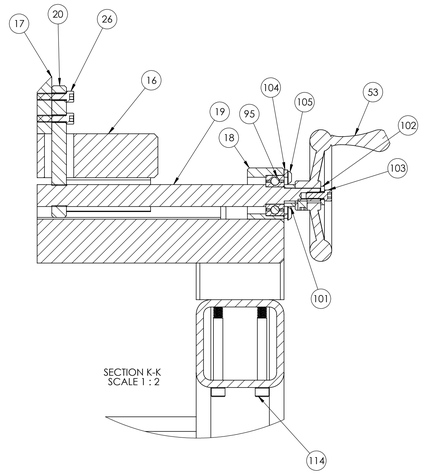

SECTION K-K
SCALE 1 : 2

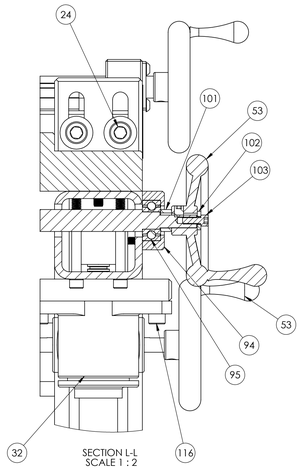

SECTION L-L
SCALE 1 : 2

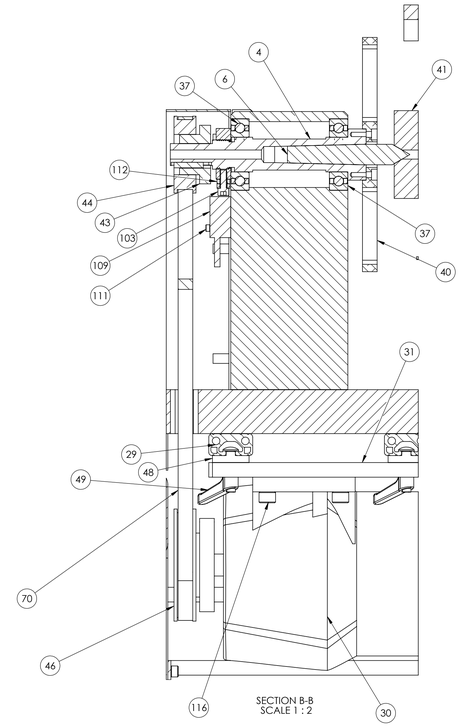

SECTION B-B
SCALE 1 : 2

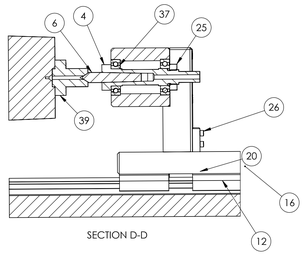

SECTION D-D

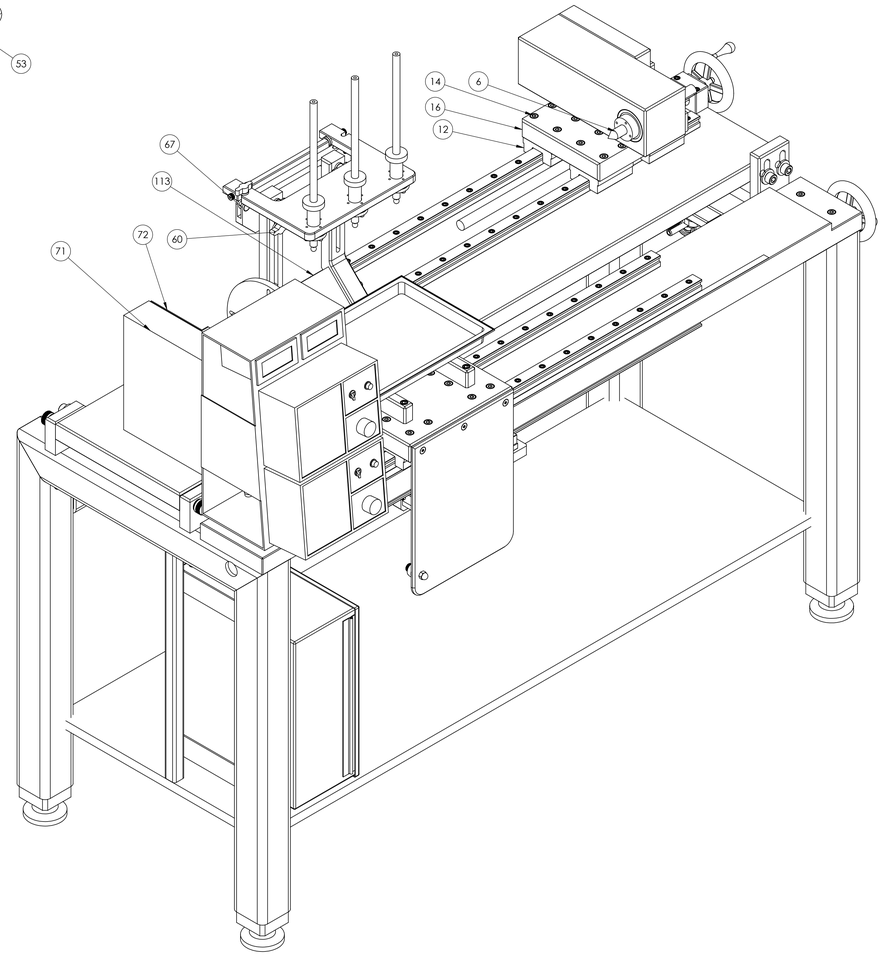

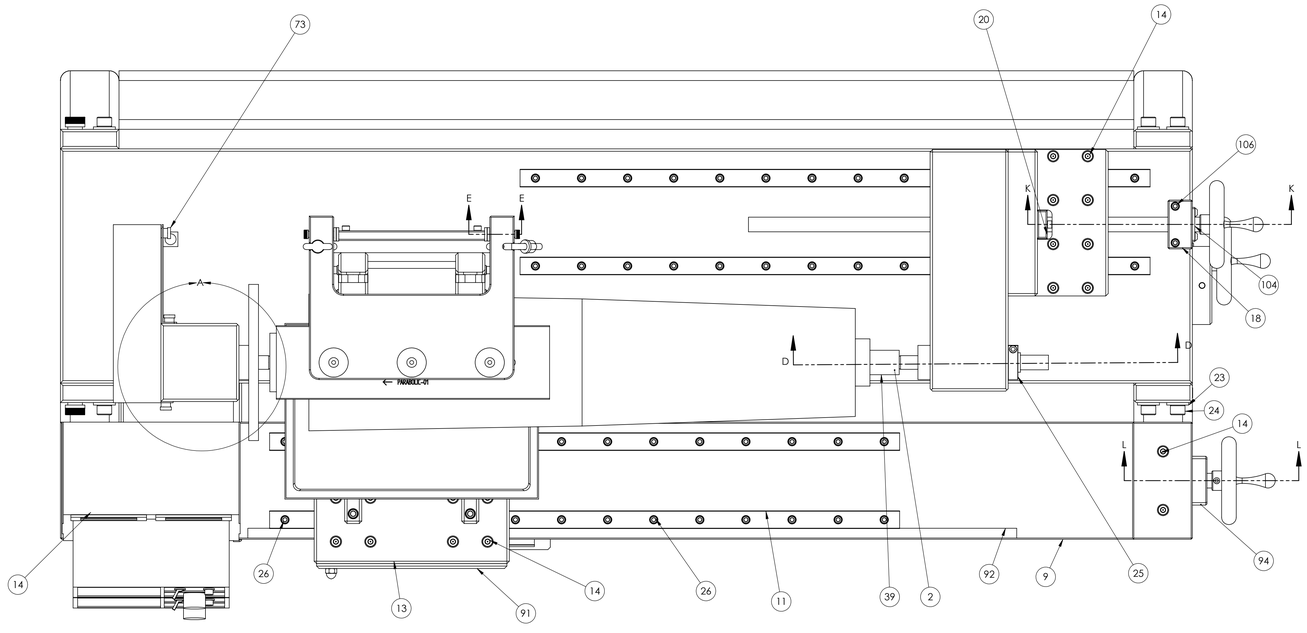

081105100

-

GEORGE C. MARSHALL
SPACE FLIGHT CENTER
NATIONAL AERONAUTICS AND
SPACE ADMINISTATION
Marshall Space Flight Center,
AL 35812

DWG SIZE E | 081105100

SHEET 2 OF 2

REVISIONS				
ZONE	SYM	DESCRIPTION	DATE	APPROVAL

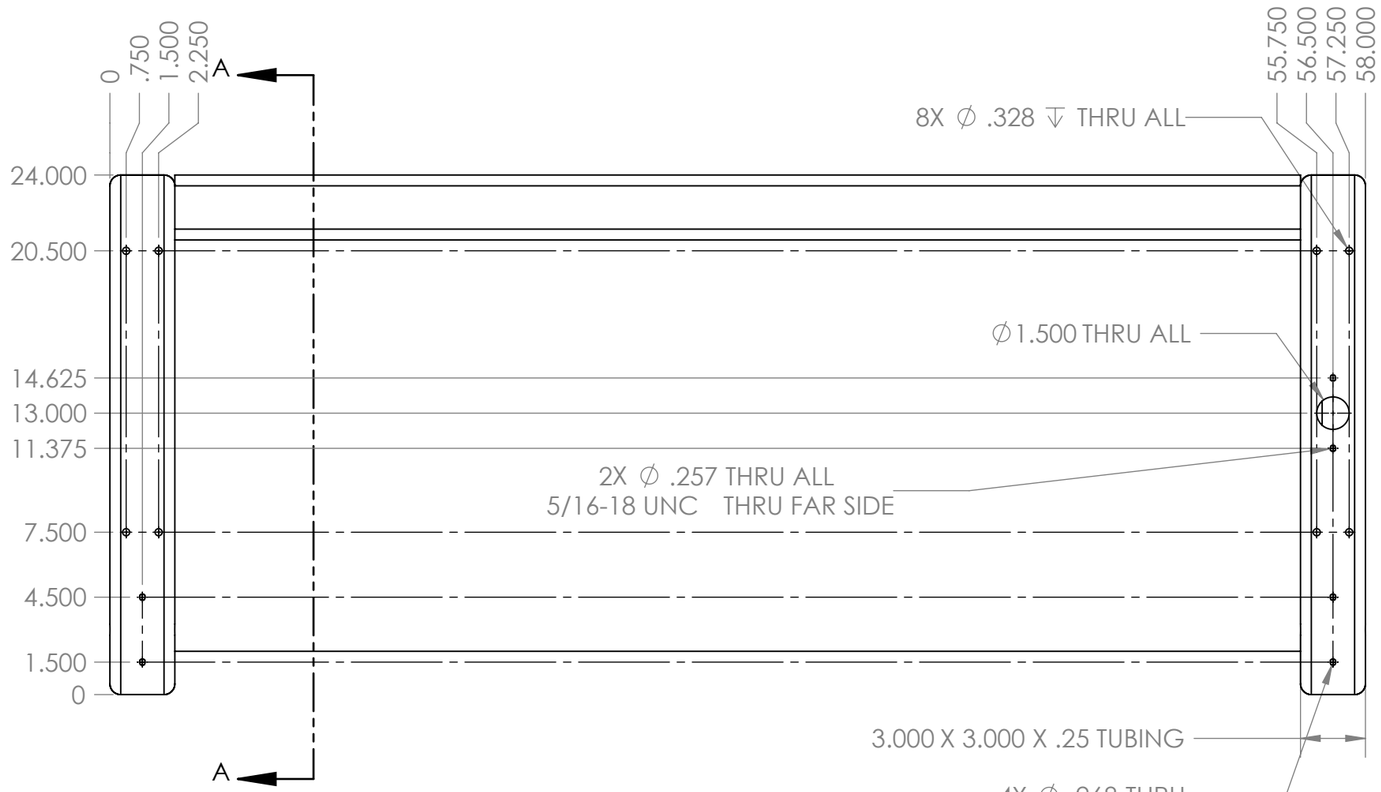

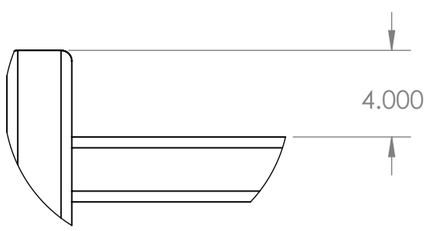

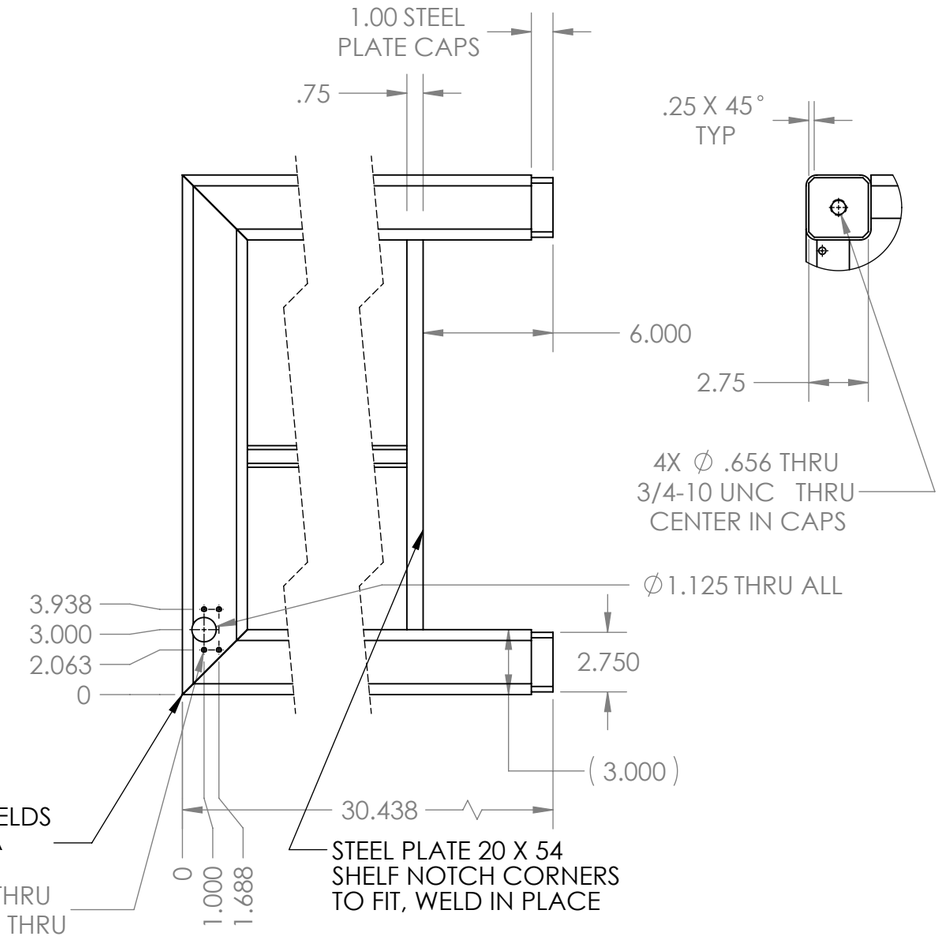

NOTES:
1. MATERIAL: STEEL TUBING AND PLATE
2. WELD ALL JOINTS ALL AROUND
3. REMOVE BURRS, BREAK EDGES
4. POWDER COAT BLACK

SEE ENGINEERING RECORDS		TOLERANCE EXCEPT AS NOTED DIMENSIONS ARE IN INCHES DECIMAL .XX = ±0.020 .XXX = ±0.005 ANGLE .X = ±1°	ORIGINAL DATE OF DRAWING 2/24/11	BASE FRAME	GEORGE C. MARSHALL SPACE FLIGHT CENTER NATIONAL AERONAUTICS AND SPACE ADMINISTATION Marshall Space Flight Center, AL 35812	
		MATERIAL 1	DRAFTSMAN BCW / STRESS			
			ENGINEER BCW / MNFG			
			MATERIALS / QA			
			CHECKER			
		HEAT TREAT	SUBMITTED		DWG SIZE B	081105101
NEXT ASSY	USED ON					
APPLICATION		FINAL FINISH 4	APPROVED	EST WT / SCALE 1:7 / CODE 339B2	SHEET 1 OF 2	

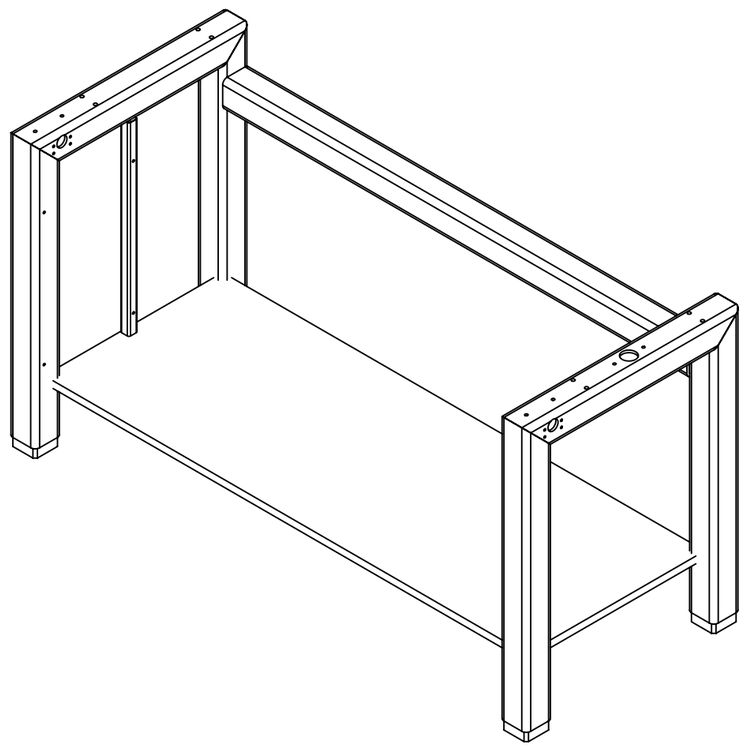

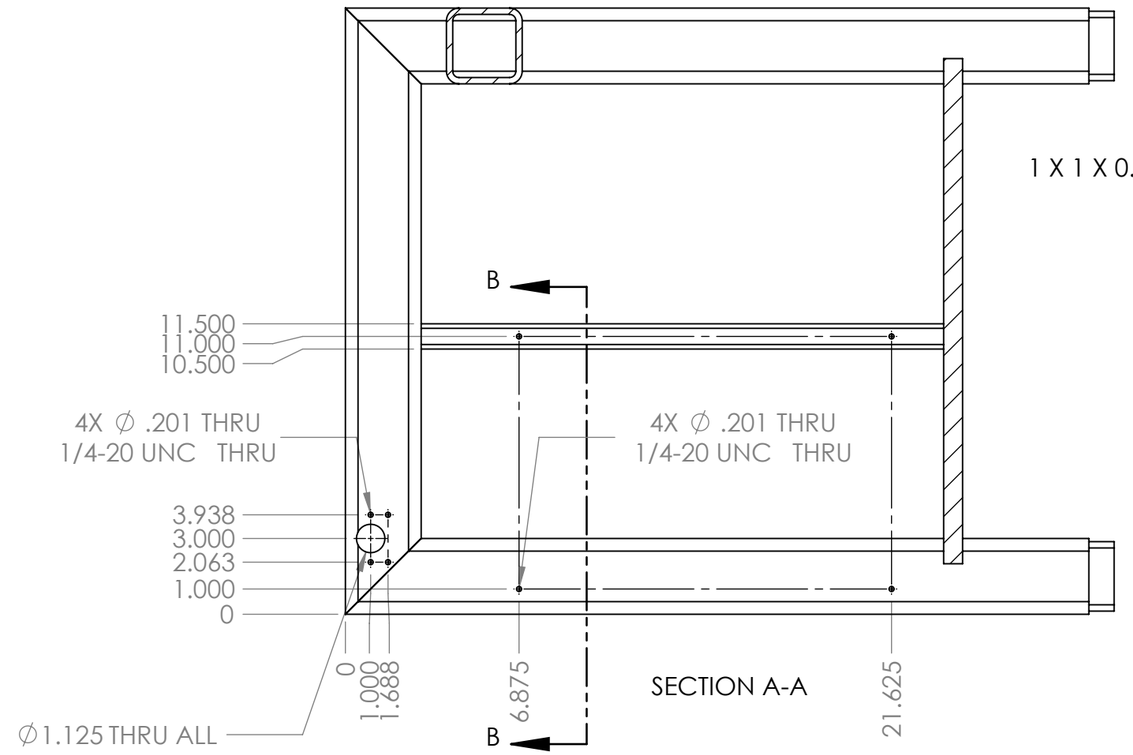

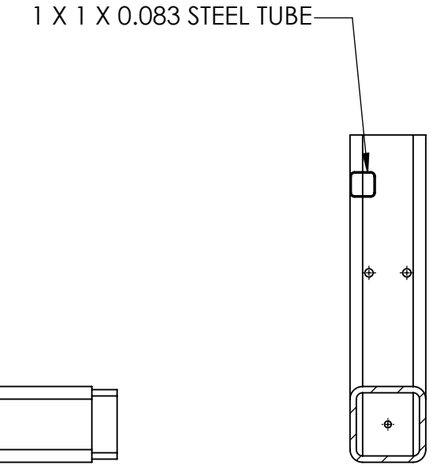

GEORGE C. MARSHALL
SPACE FLIGHT CENTER

NATIONAL AERONAUTICS AND
SPACE ADMINISTATION
Marshall Space Flight Center,
AL 35812

DWG SIZE	
B	081105101

SHEET 2 OF 2

REVISIONS				
ZONE	SYM	DESCRIPTION	DATE	APPROVAL

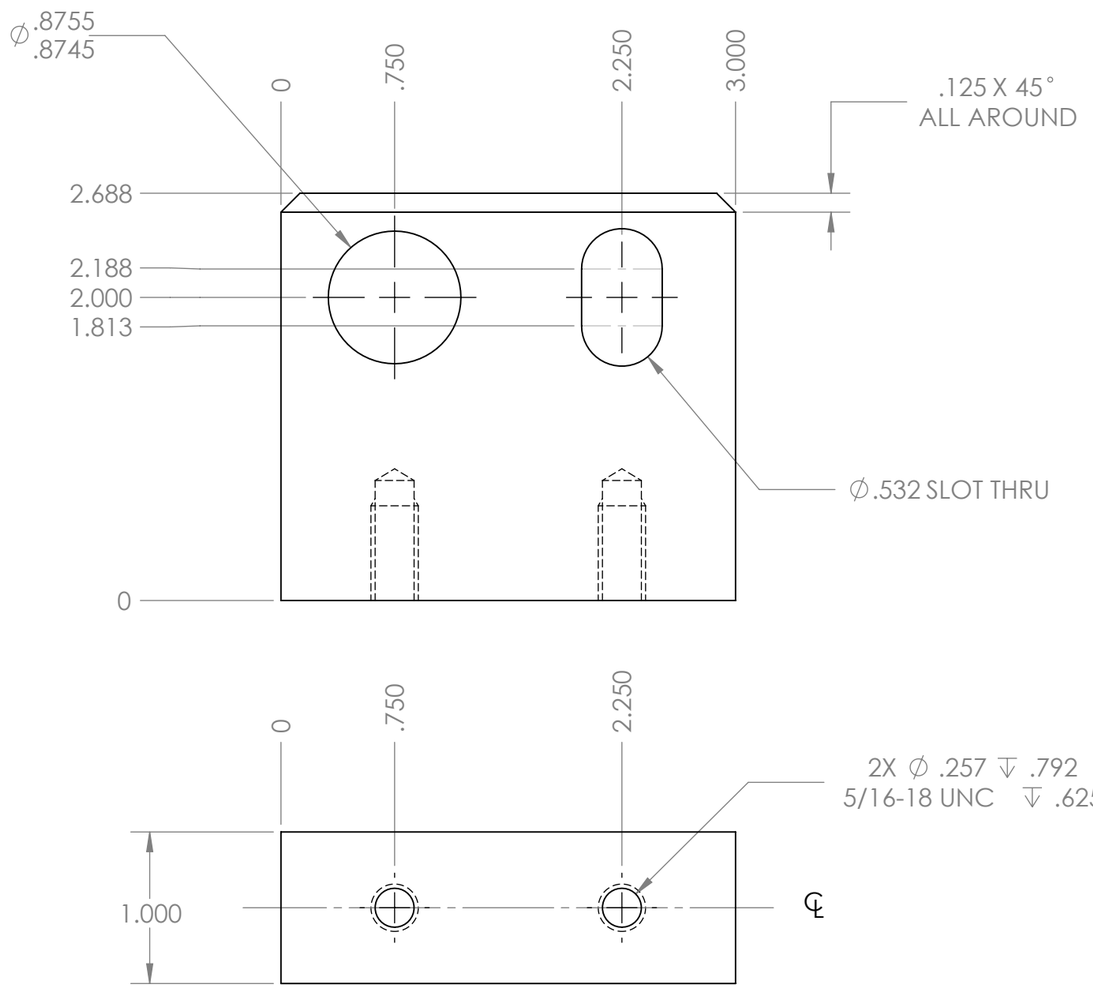

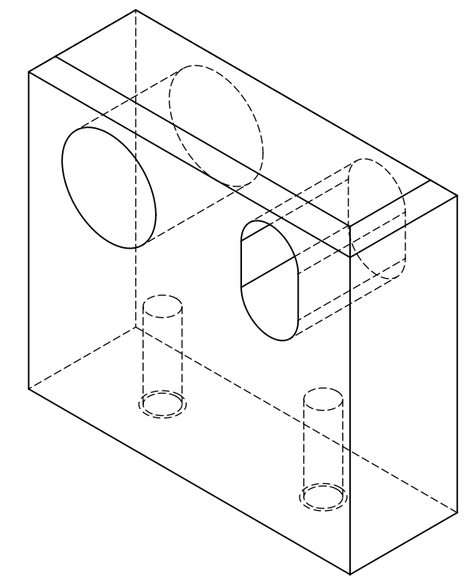

NOTES:
1. MATERIAL: STEEL PLATE, GROUND
2. FINISH: YELLOW ZINC CHROMATE PLATE
3. REMOVE BURRS AND BREAK EDGES

SEE ENGINEERING RECORDS		TOLERANCE EXCEPT AS NOTED DIMENSIONS ARE IN INCHES DECIMAL .XX = ±0.020 .XXX = ±0.005 ANGLE .X= ±1°	ORIGINAL DATE OF DRAWING 2/24/11	PIVOT BLOCK	GEORGE C. MARSHALL SPACE FLIGHT CENTER NATIONAL AERONAUTICS AND SPACE ADMINISTATION Marshall Space Flight Center, AL 35812
		MATERIAL 1	DRAFTSMAN BCW / STRESS		
			ENGINEER BCW / MNFG		
			MATERIALS / QA		
			CHECKER		DWG SIZE B / 081105102
		HEAT TREAT	SUBMITTED		
NEXT ASSY	USED ON	FINAL FINISH 2	APPROVED	EST WT / SCALE 1:1 / CODE 339B2	SHEET 1 OF 1
APPLICATION					

REVISIONS				
ZONE	SYM	DESCRIPTION	DATE	APPROVAL

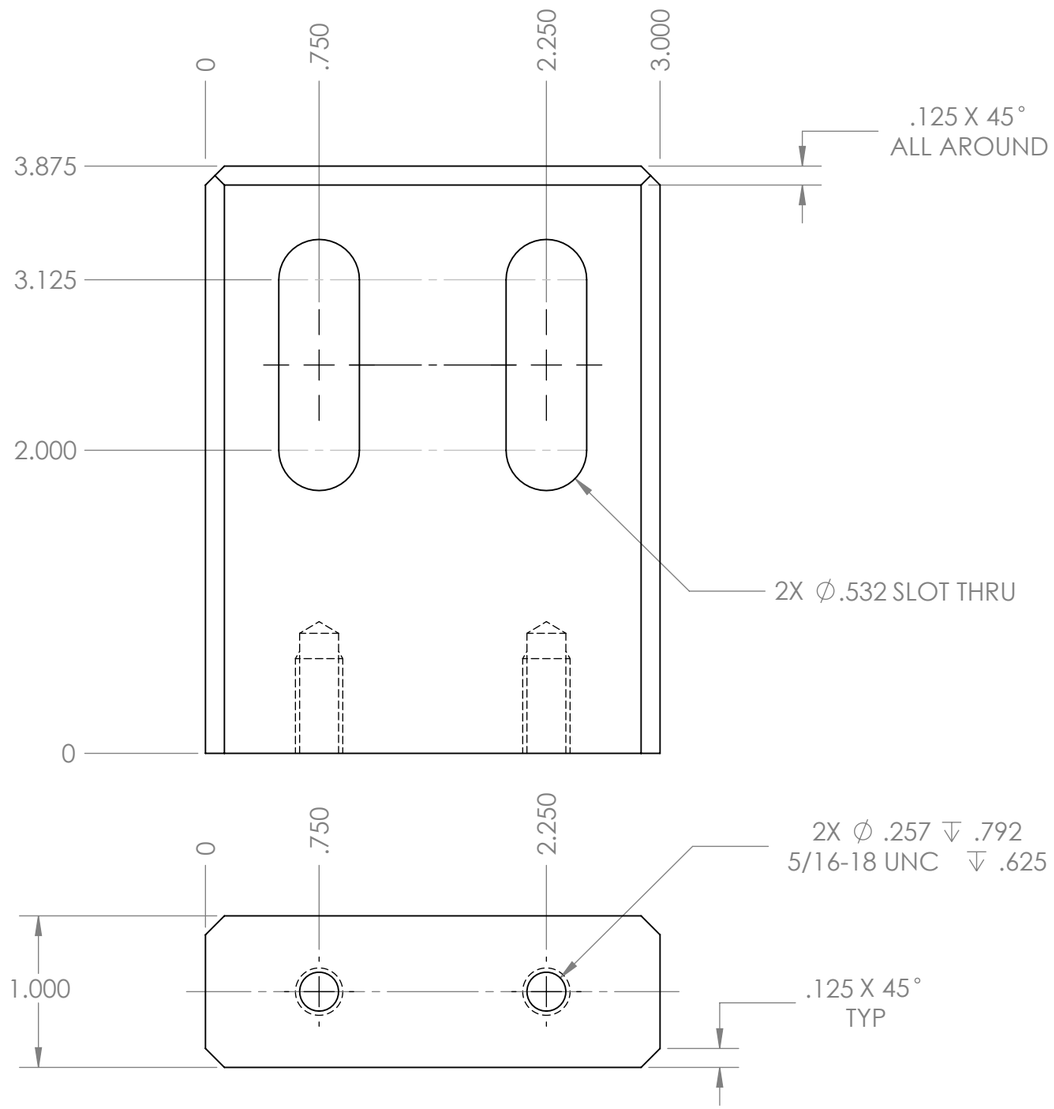

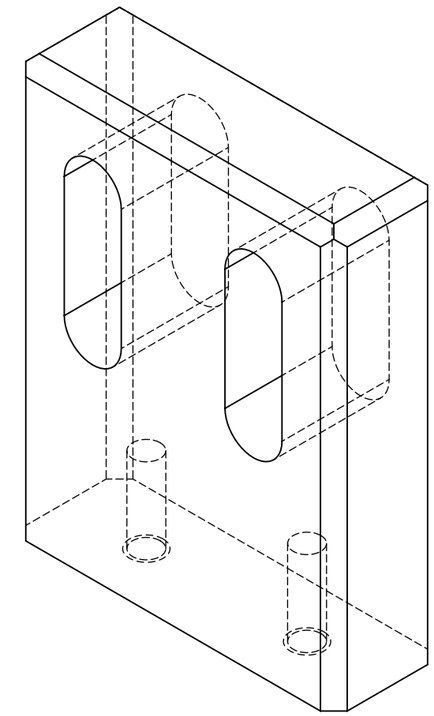

NOTES:
1. MATERIAL: STEEL PLATE, GROUND
2. FINISH: YELLOW ZINC CHROMATE PLATE
3. REMOVE BURRS AND BREAK EDGES

		TOLERANCE EXCEPT AS NOTED DIMENSIONS ARE IN INCHES DECIMAL .XX = ±0.020 .XXX = ±0.005 ANGLE .X= ±1°	ORIGINAL DATE OF DRAWING 2/24/11		LOCK BLOCK	GEORGE C. MARSHALL SPACE FLIGHT CENTER NATIONAL AERONAUTICS AND SPACE ADMINISTATION Marshall Space Flight Center, AL 35812
SEE ENGINEERING RECORDS		MATERIAL 1	DRAFTSMAN BCW	STRESS		
			ENGINEER BCW	MNFG		
			MATERIALS	QA		
			CHECKER			DWG SIZE B — 081105103
		HEAT TREAT	SUBMITTED			
NEXT ASSY	USED ON					
APPLICATION		FINAL FINISH 2	APPROVED	EST WT	SCALE 1:1 / CODE 339B2	SHEET 1 OF 1

REVISIONS				
ZONE	SYM	DESCRIPTION	DATE	APPROVAL

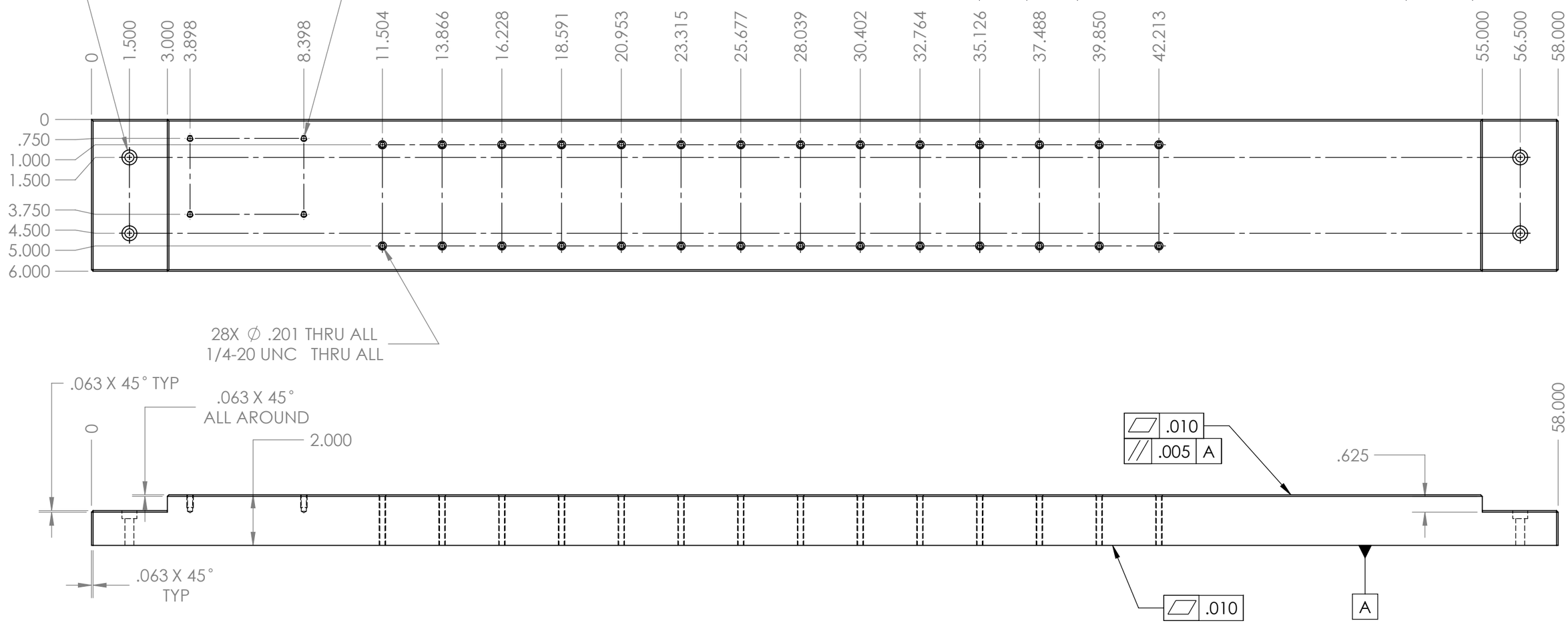

NOTES:
1. MATERIAL: STEEL PLATE, GROUND
2. FINISH: YELLOW ZINC CHROMATE PLATE
3. REMOVE BURRS AND BREAK EDGES

SEE ENGINEERING RECORDS		TOLERANCE EXCEPT AS NOTED DIMENSIONS ARE IN INCHES DECIMAL .XX = ±0.020 .XXX = ±0.005 ANGLE .X = ±1°	ORIGINAL DATE OF DRAWING 12/7/08	LINEAR BASE	GEORGE C. MARSHALL SPACE FLIGHT CENTER NATIONAL AERONAUTICS AND SPACE ADMINISTATION Marshall Space Flight Center, AL 35812	
		MATERIAL 1	DRAFTSMAN BCW / STRESS			
			ENGINEER BCW / MNFG			
			MATERIALS / QA			
			CHECKER			
NEXT ASSY	USED ON	HEAT TREAT	SUBMITTED		DWG SIZE B	081105104
APPLICATION		FINAL FINISH 2	APPROVED	EST WT / SCALE 1:4 / CODE 339B2	SHEET 1 OF 1	

REVISIONS				
ZONE	SYM	DESCRIPTION	DATE	APPROVAL

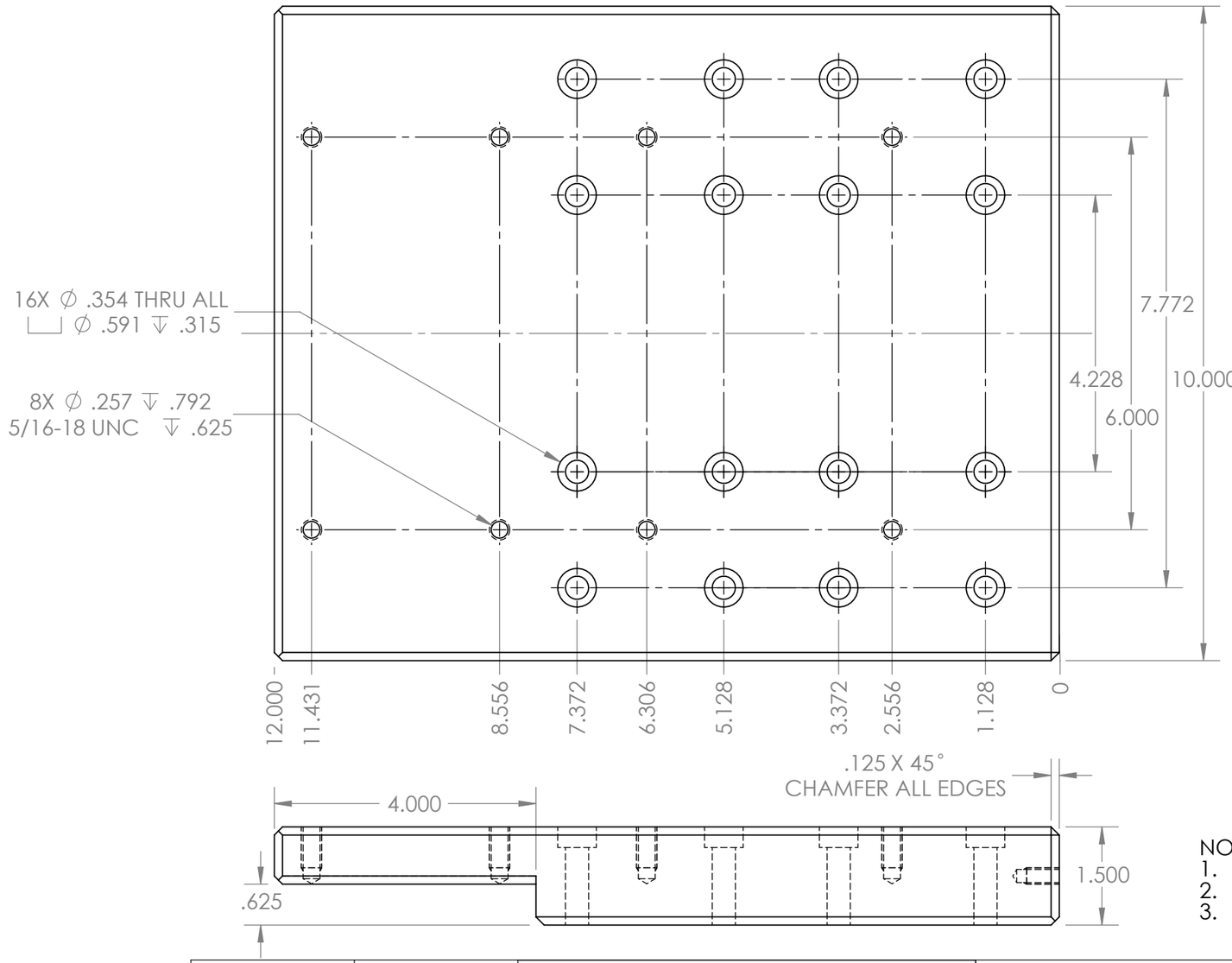

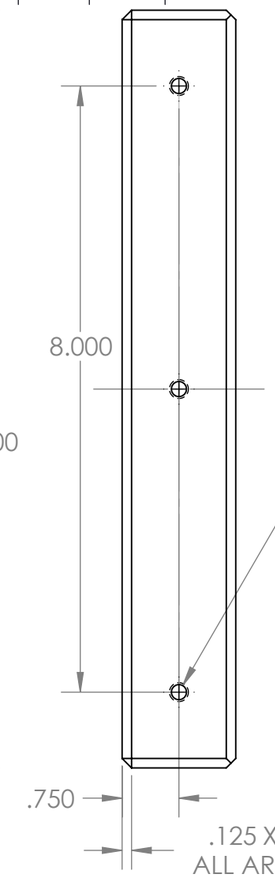

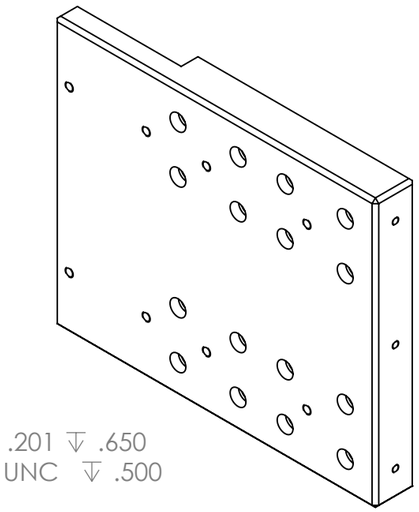

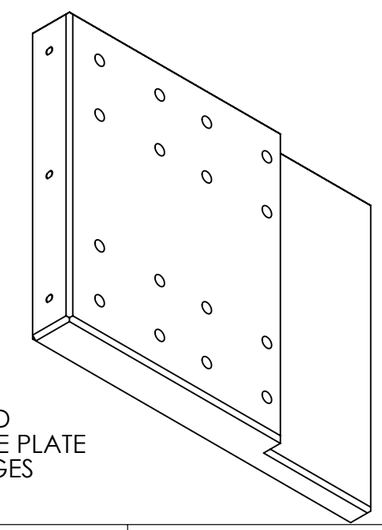

NOTES:
1. MATERIAL: STEEL PLATE, GROUND
2. FINISH: YELLOW ZINC CHROMATE PLATE
3. REMOVE BURRS AND BREAK EDGES

SEE ENGINEERING RECORDS		TOLERANCE EXCEPT AS NOTED DIMENSIONS ARE IN INCHES DECIMAL .XX = ±0.020 .XXX = ±0.005 ANGLE .X = ±1°	ORIGINAL DATE OF DRAWING 2/24/11	CAR BASE LAP	GEORGE C. MARSHALL SPACE FLIGHT CENTER NATIONAL AERONAUTICS AND SPACE ADMINISTATION Marshall Space Flight Center, AL 35812
		MATERIAL 1	DRAFTSMAN BCW / STRESS		
			ENGINEER BCW / MNFG		
			MATERIALS / QA		
			CHECKER		DWG SIZE B — 081105106
		HEAT TREAT	SUBMITTED		
NEXT ASSY	USED ON				
APPLICATION		FINAL FINISH 2	APPROVED	EST WT / SCALE 1:2 / CODE 339B2	SHEET 1 OF 1

REVISIONS				
ZONE	SYM	DESCRIPTION	DATE	APPROVAL

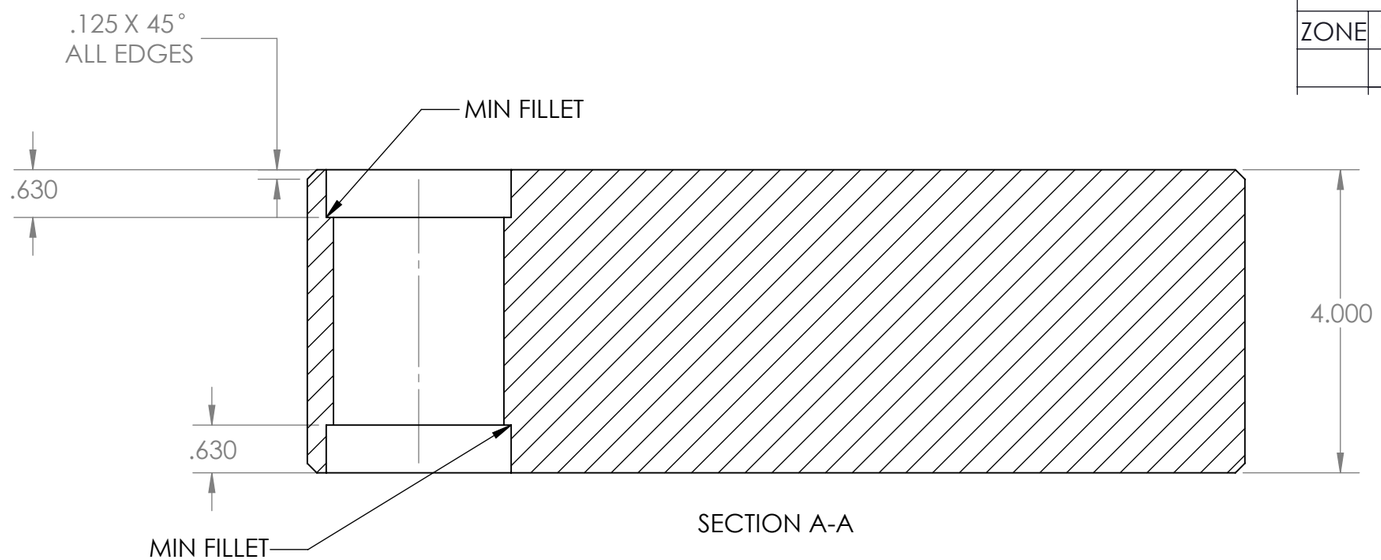

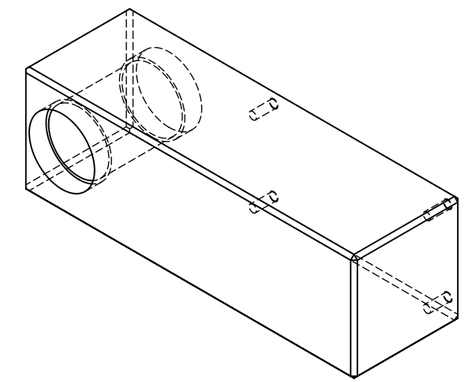

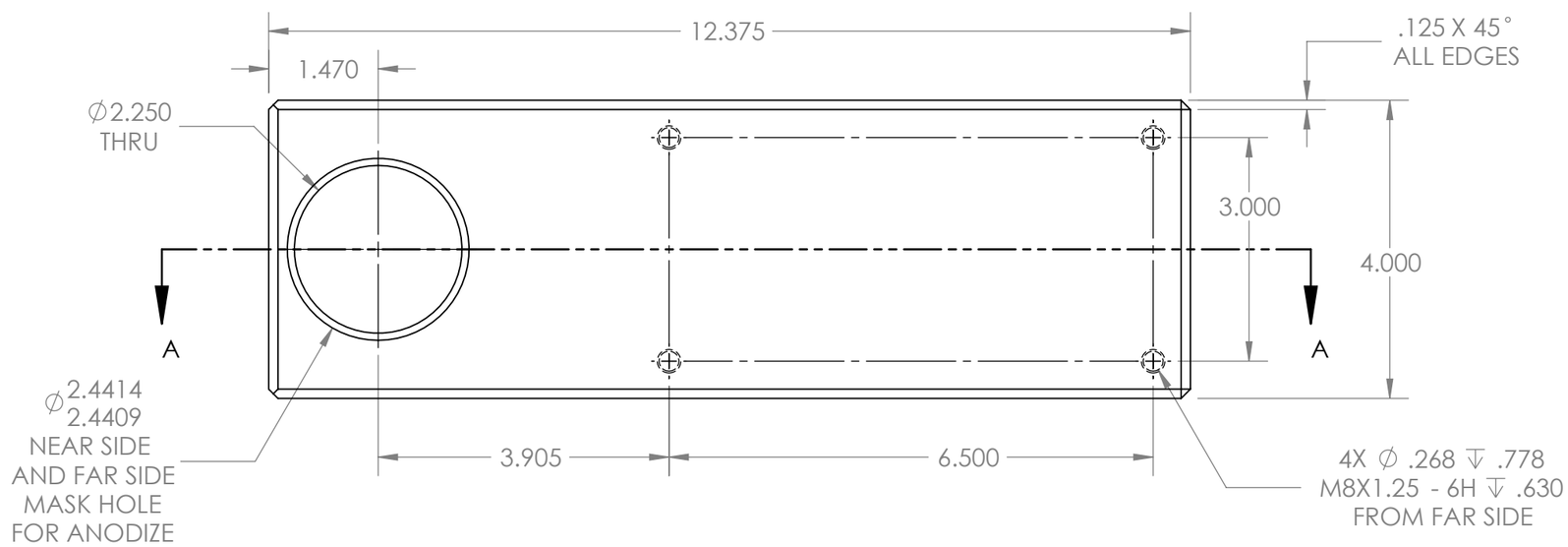

NOTES:
1. MATERIAL: 6061 ALUMINUM
2. FINISH: BLACK ANODIZE
3. REMOVE BURRS AND BREAK EDGES

SEE ENGINEERING RECORDS		TOLERANCE EXCEPT AS NOTED DIMENSIONS ARE IN INCHES DECIMAL .XX = ±0.020 .XXX = ±0.005 ANGLE .X = ±1°	ORIGINAL DATE OF DRAWING 2/3/11	TAILSTOCK POST	GEORGE C. MARSHALL SPACE FLIGHT CENTER NATIONAL AERONAUTICS AND SPACE ADMINISTATION Marshall Space Flight Center, AL 35812	
		MATERIAL 1	DRAFTSMAN BCW / STRESS			
			ENGINEER BCW / MNFG			
			MATERIALS / QA			
			CHECKER			
NEXT ASSY	USED ON	HEAT TREAT	SUBMITTED		DWG SIZE B	081105107
APPLICATION		FINAL FINISH 2	APPROVED	EST WT / SCALE 1:2	CODE 339B2	SHEET 1 OF 1

REVISIONS				
ZONE	SYM	DESCRIPTION	DATE	APPROVAL

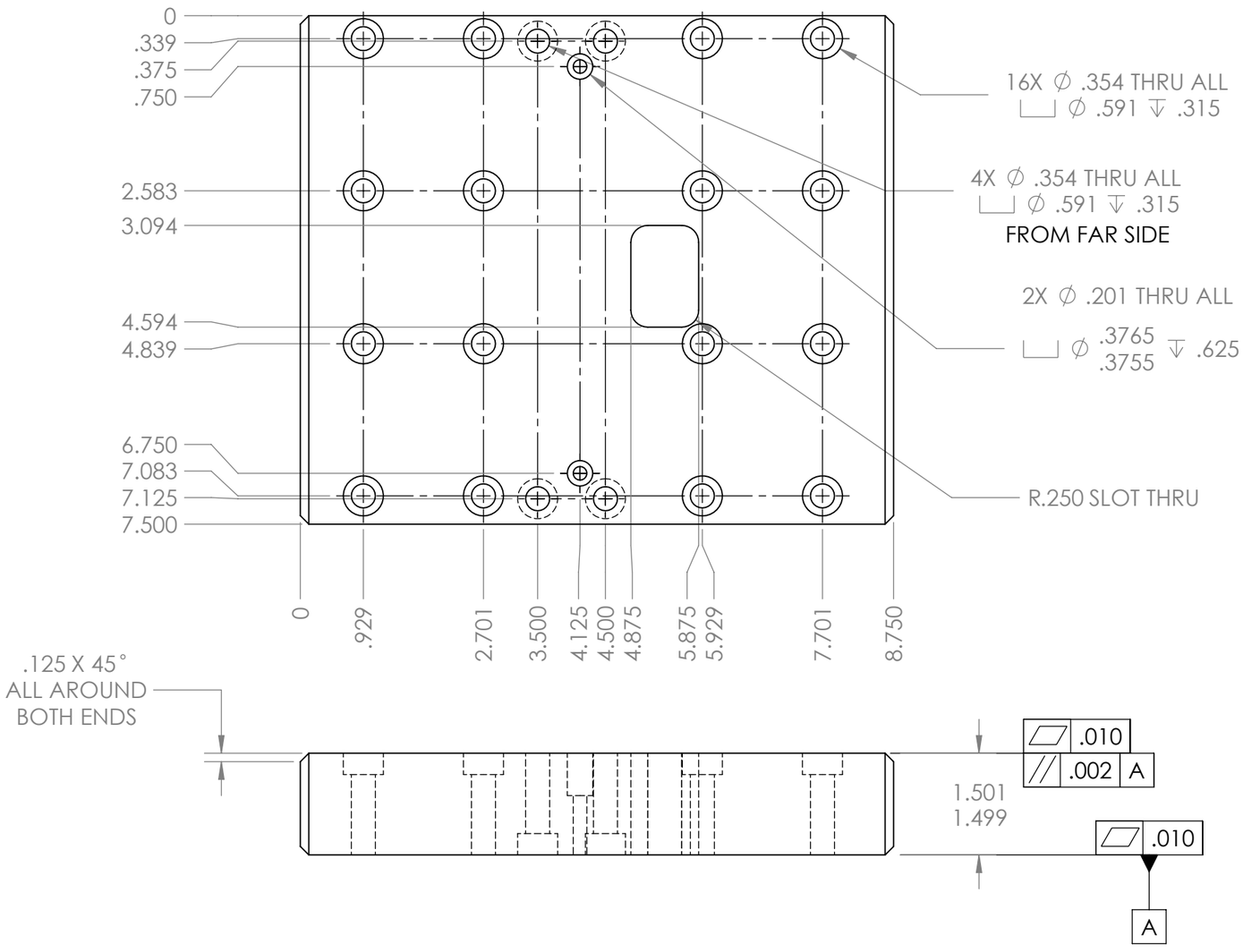

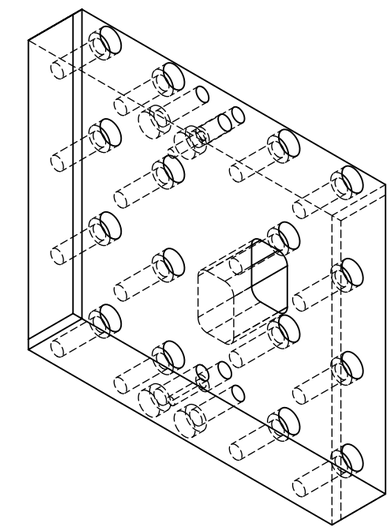

NOTES:
1. MATERIAL: STEEL PLATE, GROUND
2. FINISH: YELLOW ZINC CHROMATE PLATE
3. REMOVE BURRS AND BREAK EDGES

SEE ENGINEERING RECORDS		TOLERANCE EXCEPT AS NOTED DIMENSIONS ARE IN INCHES DECIMAL .XX = ±0.020 .XXX = ±0.005 ANGLE .X= ±1°	ORIGINAL DATE OF DRAWING 2/3/11	TAILSTOCK CAR	GEORGE C. MARSHALL SPACE FLIGHT CENTER NATIONAL AERONAUTICS AND SPACE ADMINISTATION Marshall Space Flight Center, AL 35812	
		MATERIAL 1	DRAFTSMAN BCW / STRESS			
			ENGINEER BCW / MNFG			
			MATERIALS / QA			
			CHECKER			
NEXT ASSY	USED ON	HEAT TREAT	SUBMITTED		DWG SIZE B	081105108
APPLICATION		FINAL FINISH 2	APPROVED	EST WT / SCALE 1:2 / CODE 339B2	SHEET 1 OF 1	

REVISIONS				
ZONE	SYM	DESCRIPTION	DATE	APPROVAL

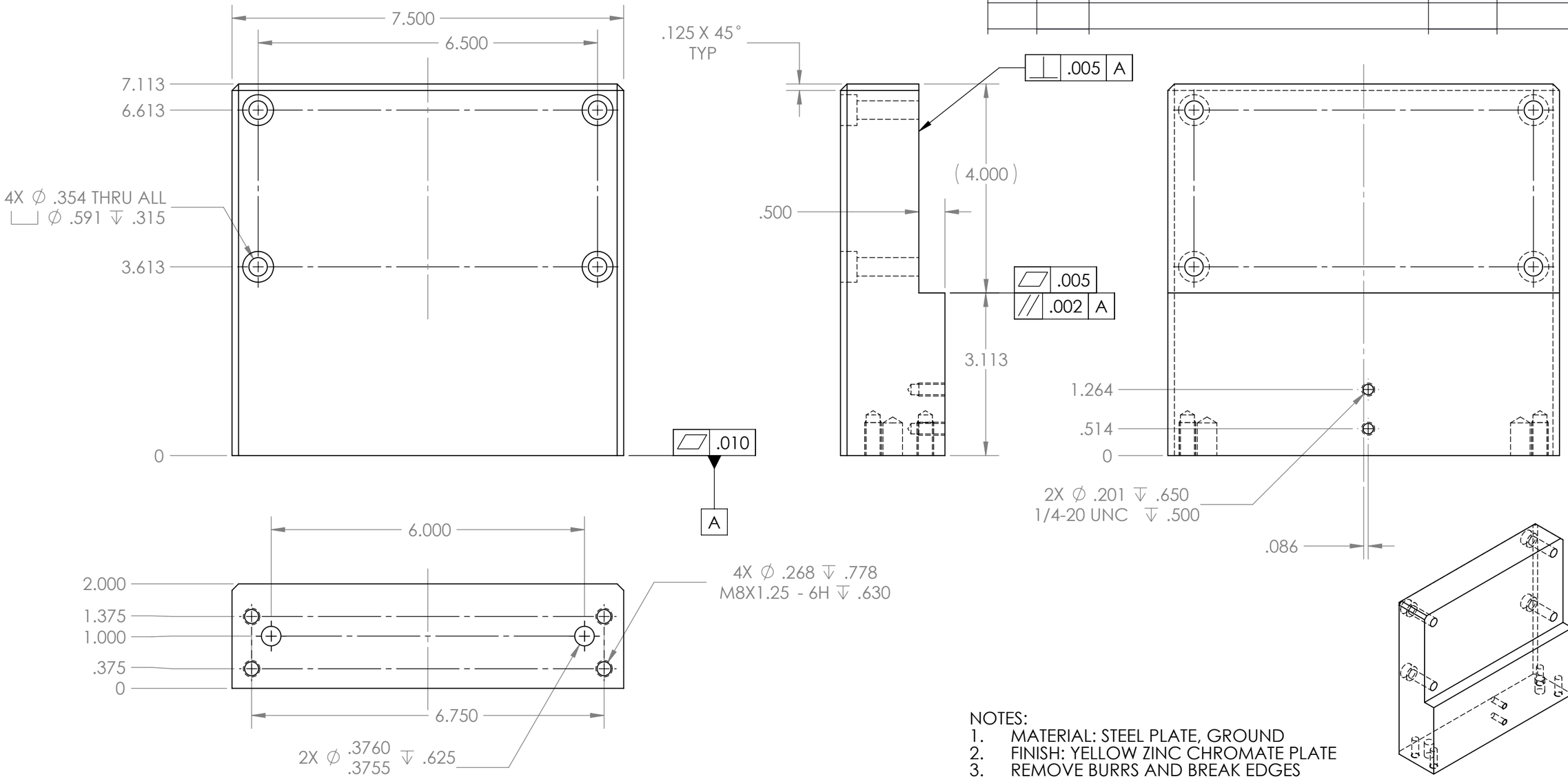

NOTES:
1. MATERIAL: STEEL PLATE, GROUND
2. FINISH: YELLOW ZINC CHROMATE PLATE
3. REMOVE BURRS AND BREAK EDGES

SEE ENGINEERING RECORDS		TOLERANCE EXCEPT AS NOTED DIMENSIONS ARE IN INCHES DECIMAL .XX = ±0.020 .XXX = ±0.005 ANGLE .X= ±1°	ORIGINAL DATE OF DRAWING 2/3/11	TAILSTOCK RISER	GEORGE C. MARSHALL SPACE FLIGHT CENTER NATIONAL AERONAUTICS AND SPACE ADMINISTATION Marshall Space Flight Center, AL 35812	
		MATERIAL 1	DRAFTSMAN BCW / STRESS			
			ENGINEER BCW / MNFG			
			MATERIALS / QA			
			CHECKER			
		HEAT TREAT	SUBMITTED		DWG SIZE B	081105109
NEXT ASSY	USED ON	FINAL FINISH 2	APPROVED	EST WT / SCALE 1:2	CODE 339B2	SHEET 1 OF 1
APPLICATION						

REVISIONS				
ZONE	SYM	DESCRIPTION	DATE	APPROVAL

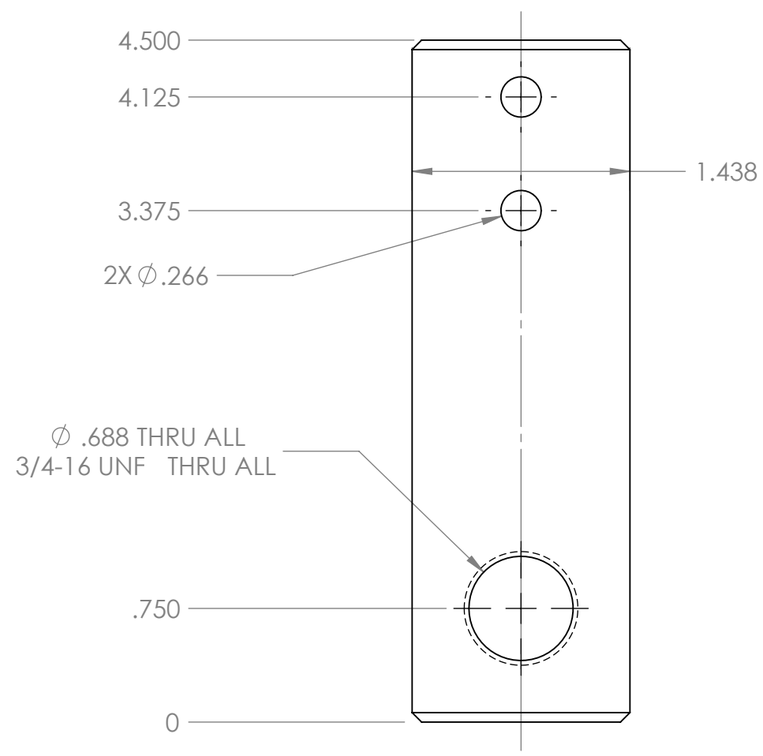

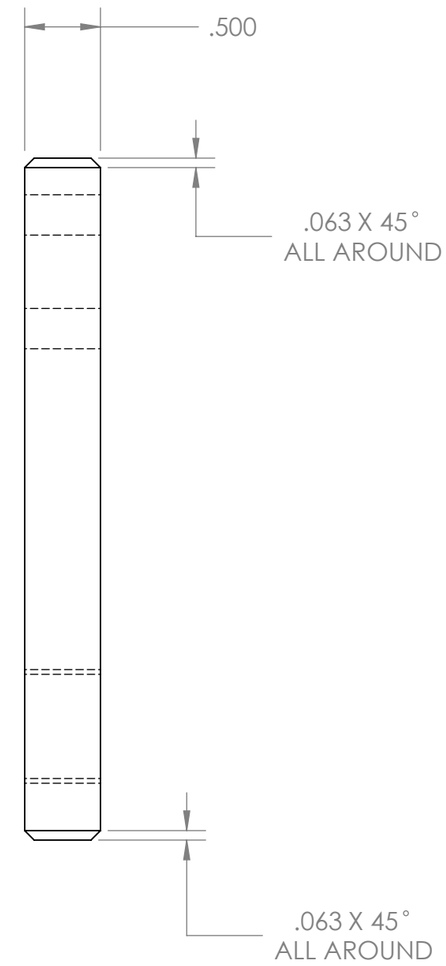

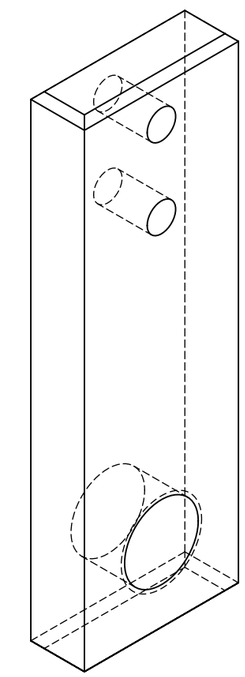

NOTES:
1. MATERIAL: STEEL PLATE, GROUND
2. FINISH: YELLOW ZINC CHROMATE PLATE
3. REMOVE BURRS AND BREAK EDGES

SEE ENGINEERING RECORDS		TOLERANCE EXCEPT AS NOTED DIMENSIONS ARE IN INCHES DECIMAL .XX = ±0.020 .XXX = ±0.005 ANGLE .X= ±1°	ORIGINAL DATE OF DRAWING 2/3/11	TAILSTOCK NUT	GEORGE C. MARSHALL SPACE FLIGHT CENTER NATIONAL AERONAUTICS AND SPACE ADMINISTATION Marshall Space Flight Center, AL 35812	
		MATERIAL 1	DRAFTSMAN BCW / STRESS			
			ENGINEER BCW / MNFG			
			MATERIALS / QA			
			CHECKER			
		HEAT TREAT	SUBMITTED		DWG SIZE B	081105110
NEXT ASSY	USED ON					
APPLICATION		FINAL FINISH 2	APPROVED	EST WT / SCALE 1:1 / CODE 339B2	SHEET 1 OF 1	

REVISIONS				
ZONE	SYM	DESCRIPTION	DATE	APPROVAL

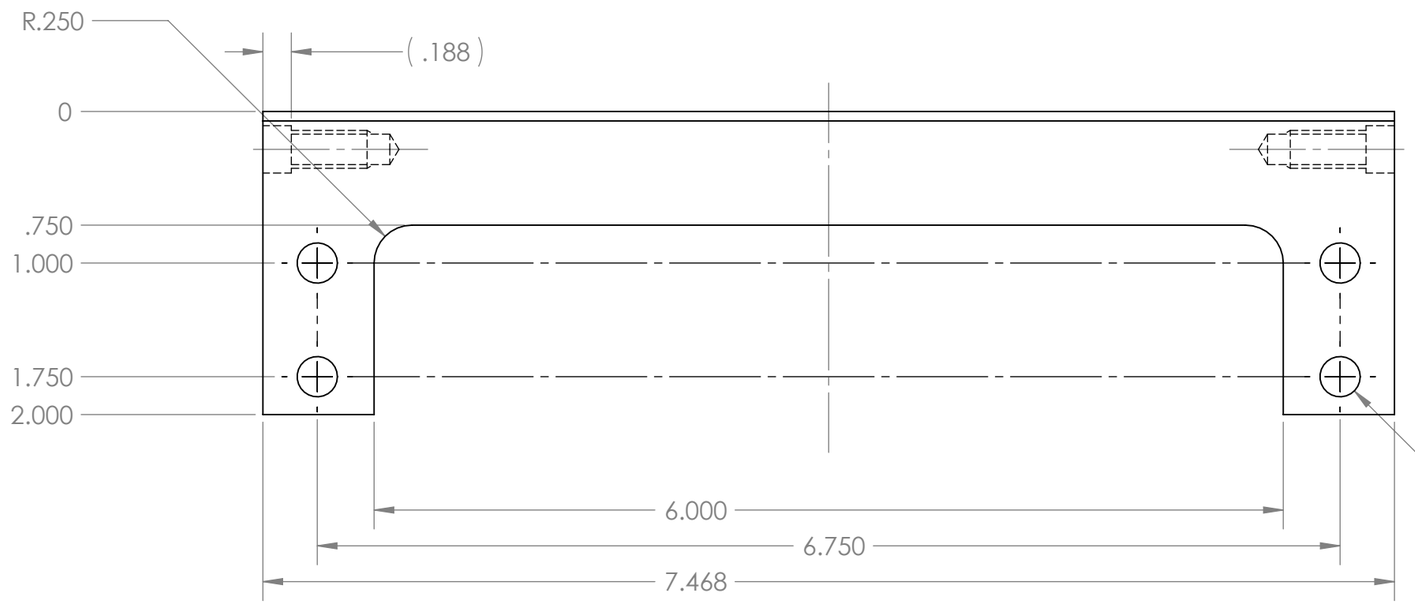

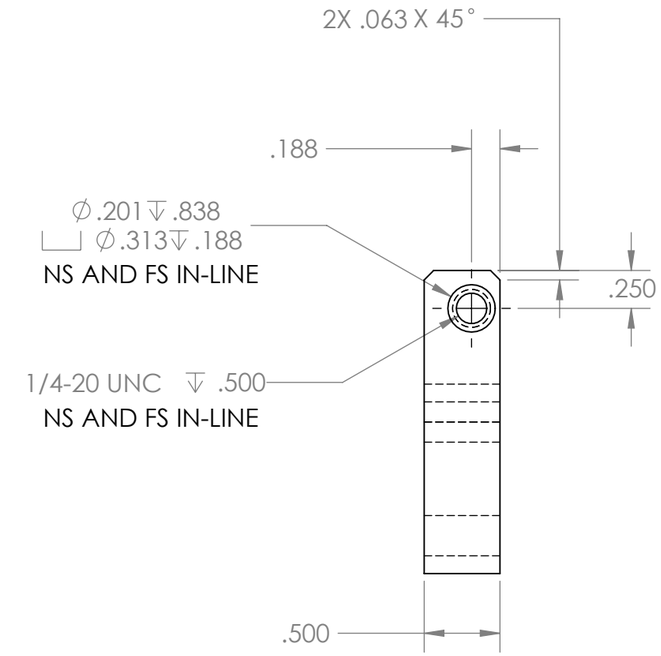

NOTES:
1. MATERIAL: STEEL PLATE, GROUND
2. FINISH: YELLOW ZINC CHROMATE PLATE
3. REMOVE BURRS AND BREAK EDGES

SEE ENGINEERING RECORDS		TOLERANCE EXCEPT AS NOTED DIMENSIONS ARE IN INCHES DECIMAL .XX = ±0.020 .XXX = ±0.005 ANGLE .X= ±1°	ORIGINAL DATE OF DRAWING 2/4/11	LAP HINGE PLATE	GEORGE C. MARSHALL SPACE FLIGHT CENTER NATIONAL AERONAUTICS AND SPACE ADMINISTATION Marshall Space Flight Center, AL 35812		
		MATERIAL 1	DRAFTSMAN BCW / STRESS				
			ENGINEER BCW / MNFG				
			MATERIALS / QA				
			CHECKER				
NEXT ASSY	USED ON	HEAT TREAT	SUBMITTED		DWG SIZE B	081105111	
APPLICATION		FINAL FINISH 2	APPROVED	EST WT	SCALE 1:1	CODE 339B2	SHEET 1 OF 1

REVISIONS				
ZONE	SYM	DESCRIPTION	DATE	APPROVAL

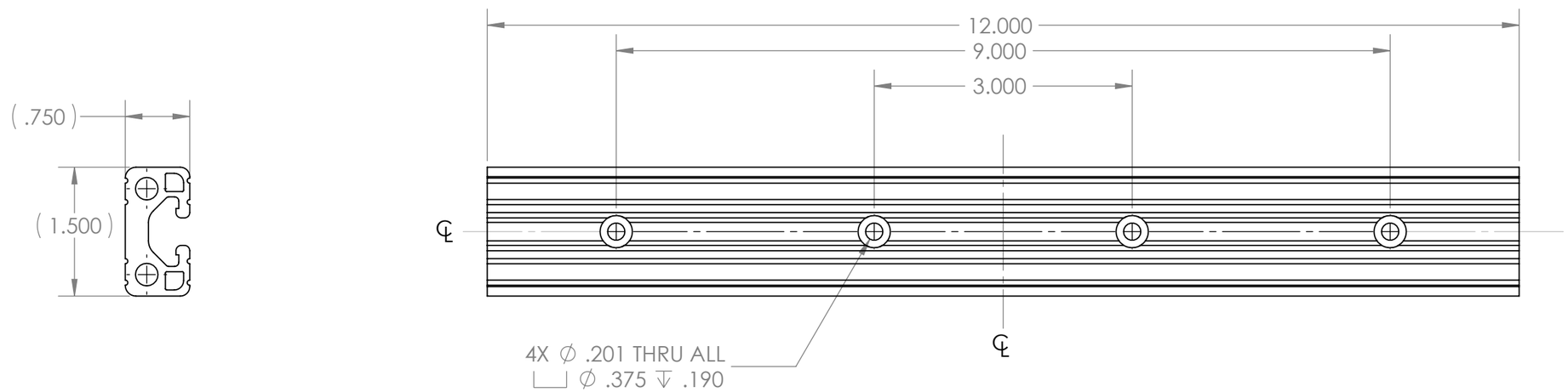

NOTES:
1. MAKE FROM 80/20 EXTRUSION # 1534
2. REMOVE BURRS AND BREAK EDGES

SEE ENGINEERING RECORDS		TOLERANCE EXCEPT AS NOTED DIMENSIONS ARE IN INCHES DECIMAL .XX = ±0.020 .XXX = ±0.005 ANGLE .X= ±1°	ORIGINAL DATE OF DRAWING 9/10/10	MOTOR BASE SLIDE	GEORGE C. MARSHALL SPACE FLIGHT CENTER NATIONAL AERONAUTICS AND SPACE ADMINISTATION Marshall Space Flight Center, AL 35812		
		MATERIAL 1	DRAFTSMAN BCW / STRESS				
			ENGINEER BCW / MNFG				
			MATERIALS / QA				
			CHECKER				
NEXT ASSY	USED ON	HEAT TREAT	SUBMITTED		DWG SIZE B	081105113	
APPLICATION		FINAL FINISH 2	APPROVED	EST WT	SCALE 1:1.5	CODE 339B2	SHEET 1 OF 1

REVISIONS				
ZONE	SYM	DESCRIPTION	DATE	APPROVAL

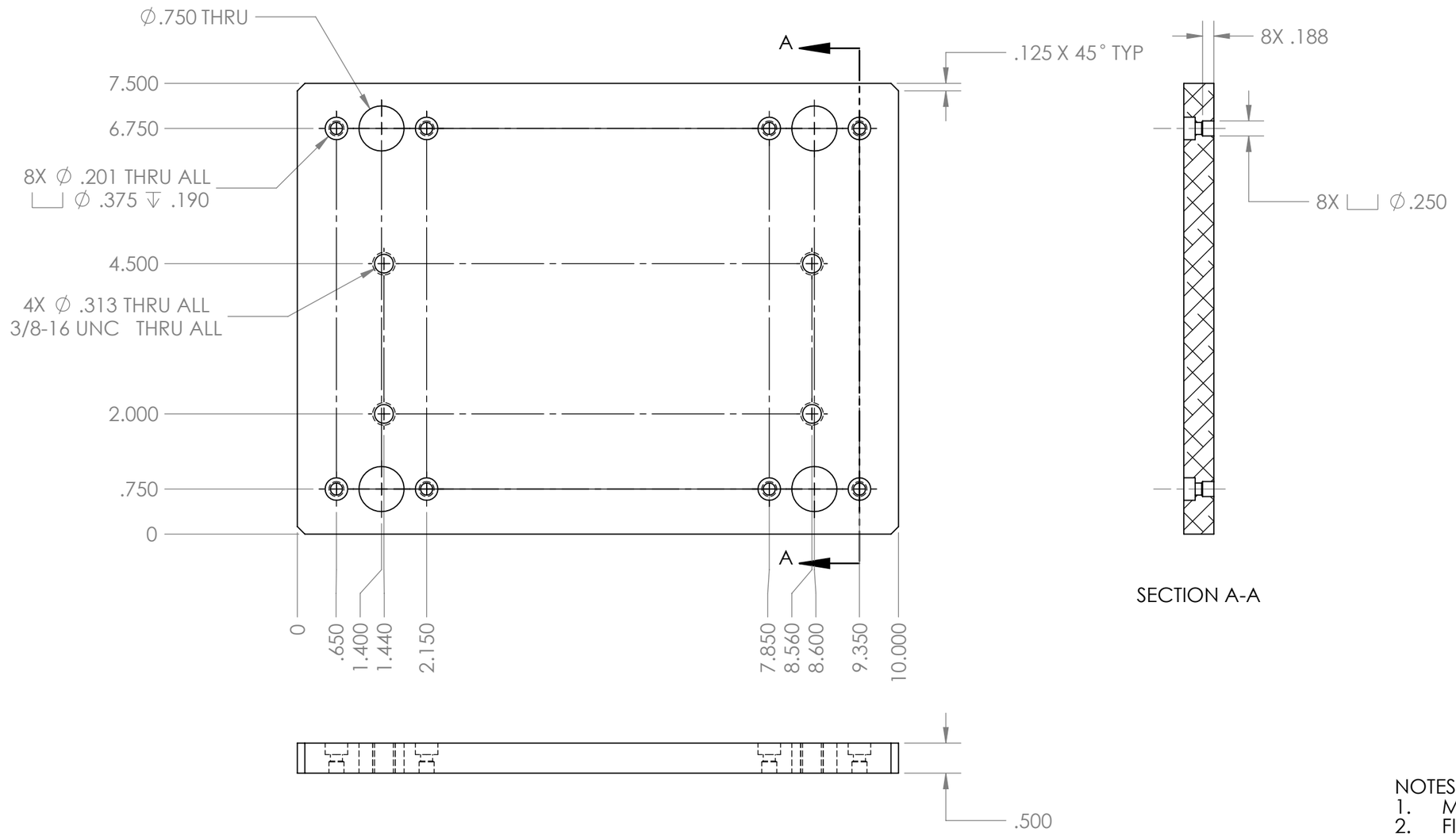

SECTION A-A

NOTES:
1. MATERIAL: STEEL PLATE, GROUND
2. FINISH: YELLOW ZINC CHROMATE PLATE
3. REMOVE BURRS AND BREAK EDGES

SEE ENGINEERING RECORDS		TOLERANCE EXCEPT AS NOTED DIMENSIONS ARE IN INCHES DECIMAL .XX = ±0.020 .XXX = ±0.005 ANGLE .X= ± 1°	ORIGINAL DATE OF DRAWING 9/10/10	MOTOR BASE	GEORGE C. MARSHALL SPACE FLIGHT CENTER NATIONAL AERONAUTICS AND SPACE ADMINISTATION Marshall Space Flight Center, AL 35812	
		MATERIAL 1	DRAFTSMAN BCW / STRESS			
			ENGINEER BCW / MNFG			
			MATERIALS / QA			
			CHECKER			
NEXT ASSY	USED ON	HEAT TREAT	SUBMITTED		DWG SIZE B	081105114
APPLICATION		FINAL FINISH 2	APPROVED	EST WT / SCALE 1:2 / CODE 339B2	SHEET 1 OF 1	

REVISIONS				
ZONE	SYM	DESCRIPTION	DATE	APPROVAL

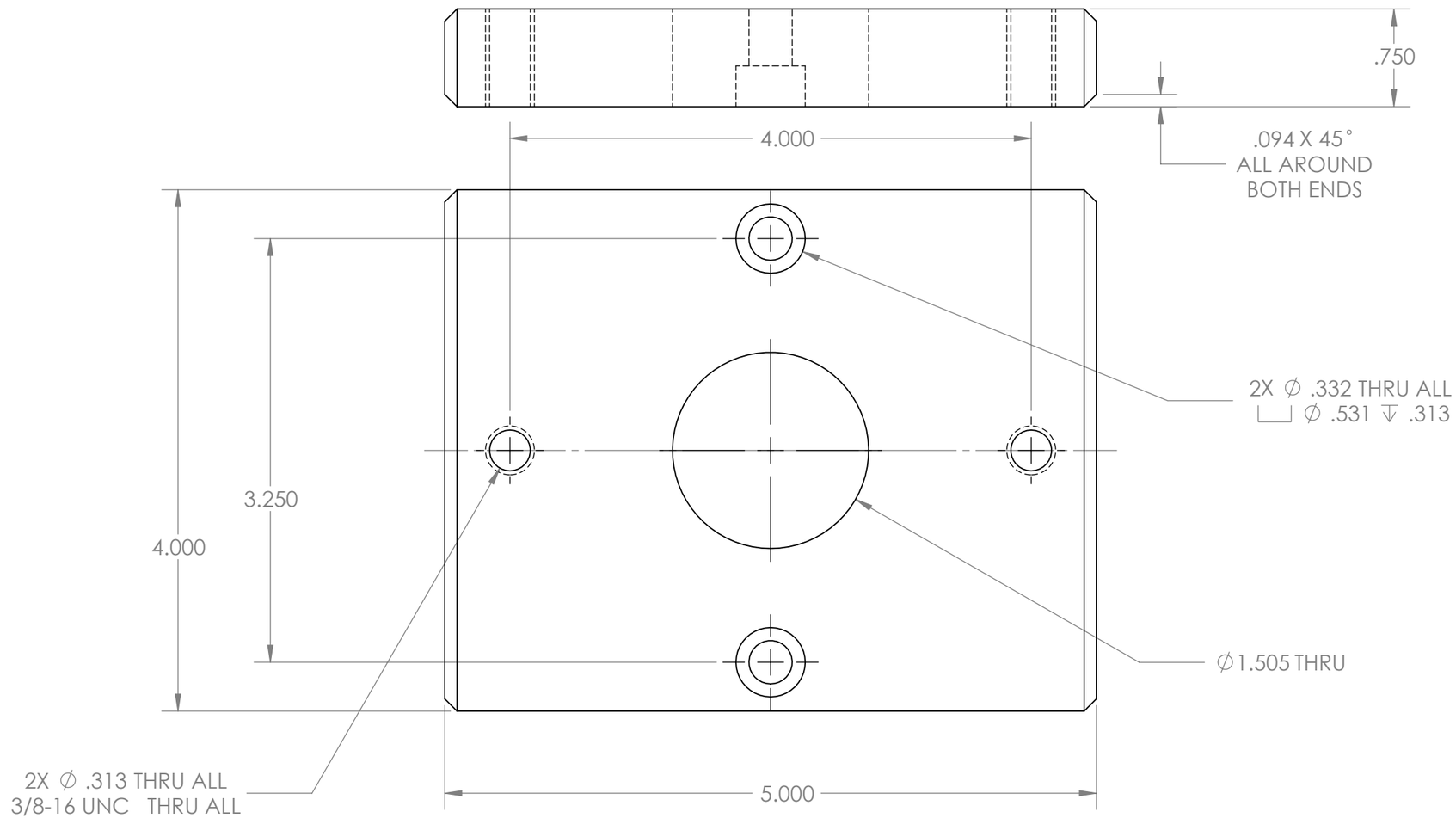

NOTES:
1. MATERIAL: STEEL PLATE, GROUND
2. FINISH: YELLOW ZINC CHROMATE PLATE
3. REMOVE BURRS AND BREAK EDGES

SEE ENGINEERING RECORDS		TOLERANCE EXCEPT AS NOTED DIMENSIONS ARE IN INCHES DECIMAL .XX = ±0.020 .XXX = ±0.005 ANGLE .X= ±1°	ORIGINAL DATE OF DRAWING 2/6/11	JACK BASE	GEORGE C. MARSHALL SPACE FLIGHT CENTER NATIONAL AERONAUTICS AND SPACE ADMINISTATION Marshall Space Flight Center, AL 35812
		MATERIAL 1	DRAFTSMAN BCW / STRESS		
			ENGINEER BCW / MNFG		
			MATERIALS / QA		
			CHECKER		DWG SIZE B — 081105115
		HEAT TREAT	SUBMITTED		
NEXT ASSY	USED ON	FINAL FINISH 2	APPROVED	EST WT / SCALE 1:1 / CODE 339B2	SHEET 1 OF 1
APPLICATION					

REVISIONS				
ZONE	SYM	DESCRIPTION	DATE	APPROVAL

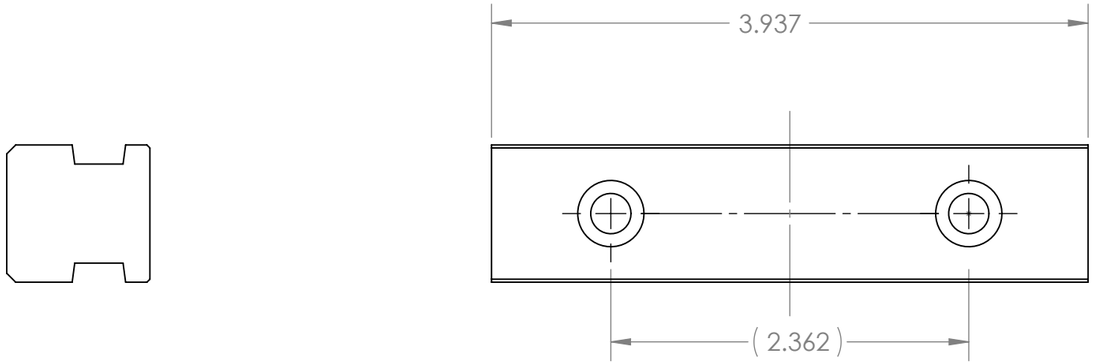

NOTES:
1. MAKE FROM IKO RAIL PART NUMBER LWH25R100BHS2.
2. REMOVE BURRS AND BREAK EDGES IF RAIL IS CUT TO LENGTH.

SEE ENGINEERING RECORDS		TOLERANCE EXCEPT AS NOTED DIMENSIONS ARE IN INCHES DECIMAL .XX = ±0.020 .XXX = ±0.005 ANGLE .X= ±1°	ORIGINAL DATE OF DRAWING 3/6/11	TILT RAIL	GEORGE C. MARSHALL SPACE FLIGHT CENTER NATIONAL AERONAUTICS AND SPACE ADMINISTATION Marshall Space Flight Center, AL 35812	
		MATERIAL 1	DRAFTSMAN BCW / STRESS			
			ENGINEER BCW / MNFG			
			MATERIALS / QA			
			CHECKER			
		HEAT TREAT	SUBMITTED		DWG SIZE B	081105117
NEXT ASSY	USED ON					
APPLICATION		FINAL FINISH	APPROVED	EST WT / SCALE 1:1	CODE 339B2	SHEET 1 OF 1

REVISIONS				
ZONE	SYM	DESCRIPTION	DATE	APPROVAL

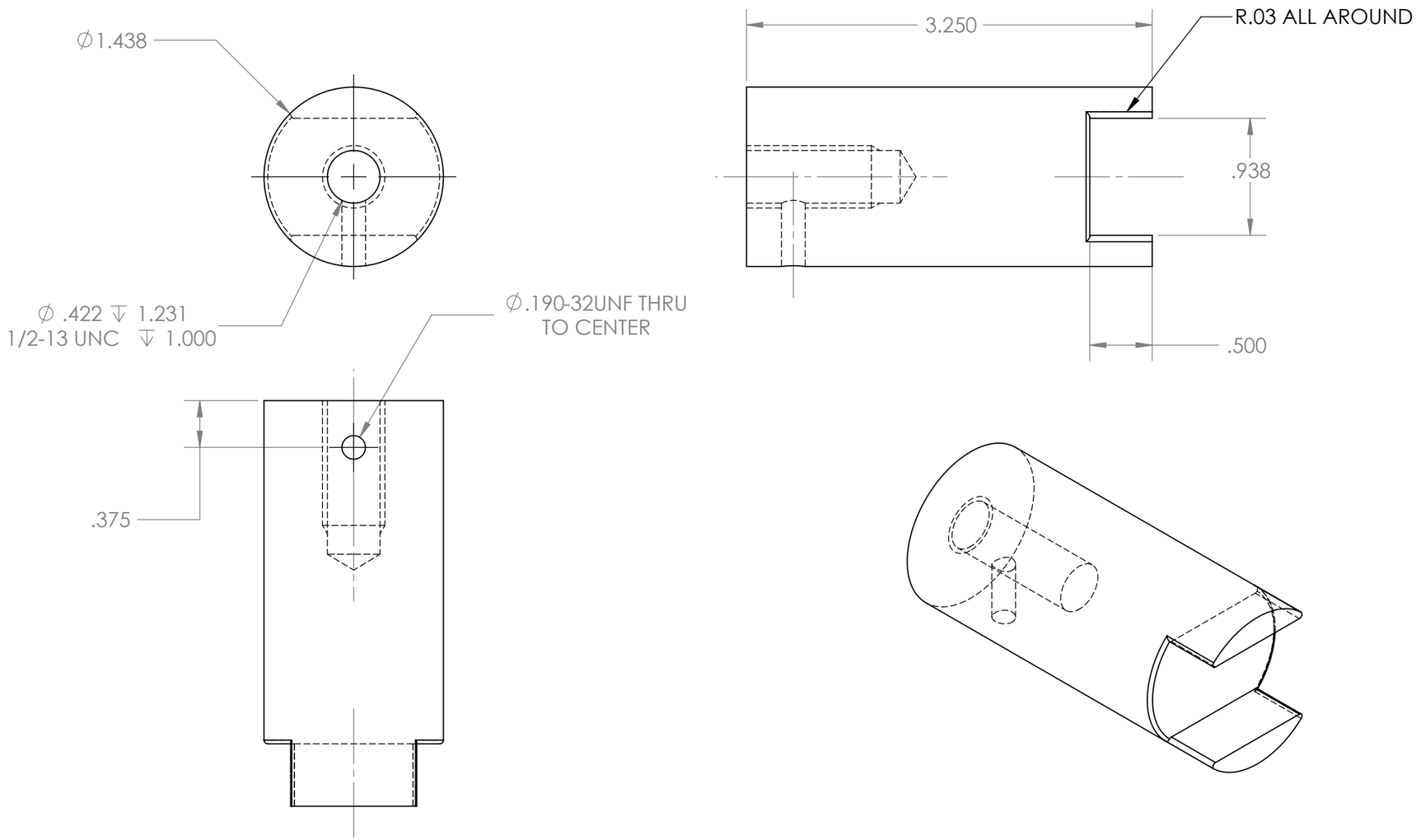

NOTES:
1. MATERIAL: 6061 ALUMINUM
2. FINISH: BLACK ANODIZE
3. REMOVE BURRS AND BREAK EDGES

		TOLERANCE EXCEPT AS NOTED DIMENSIONS ARE IN INCHES DECIMAL .XX = ±0.020 .XXX = ±0.005 ANGLE .X= ± 1°	ORIGINAL DATE OF DRAWING 3/6/11	TILT TIP	GEORGE C. MARSHALL SPACE FLIGHT CENTER NATIONAL AERONAUTICS AND SPACE ADMINISTATION Marshall Space Flight Center, AL 35812	
SEE ENGINEERING RECORDS		MATERIAL 1	DRAFTSMAN BCW / STRESS		DWG SIZE B	081105118
			ENGINEER BCW / MNFG			
			MATERIALS / QA			
			CHECKER			
NEXT ASSY	USED ON	HEAT TREAT	SUBMITTED			
APPLICATION		FINAL FINISH 2	APPROVED	EST WT / SCALE 1:1 / CODE 339B2	SHEET 1 OF 1	

REVISIONS				
ZONE	SYM	DESCRIPTION	DATE	APPROVAL

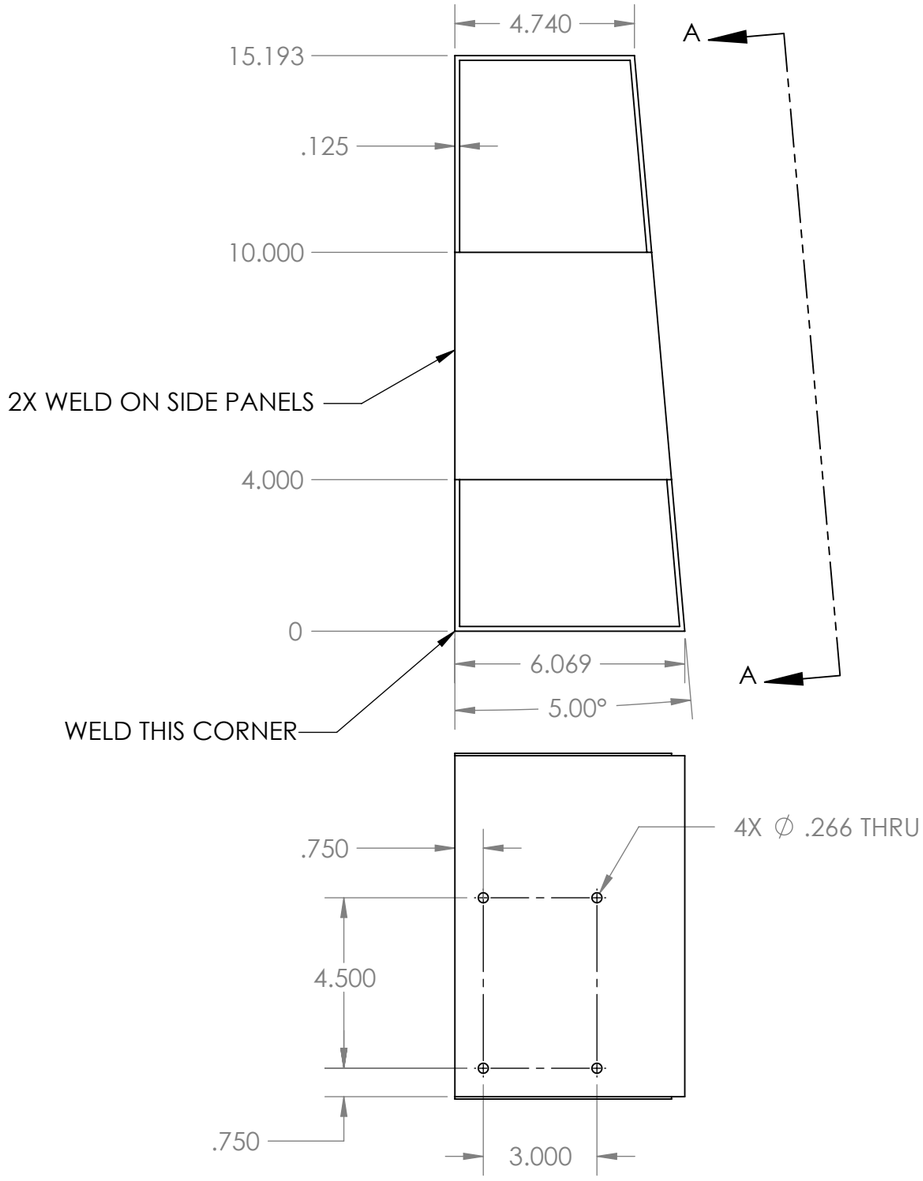

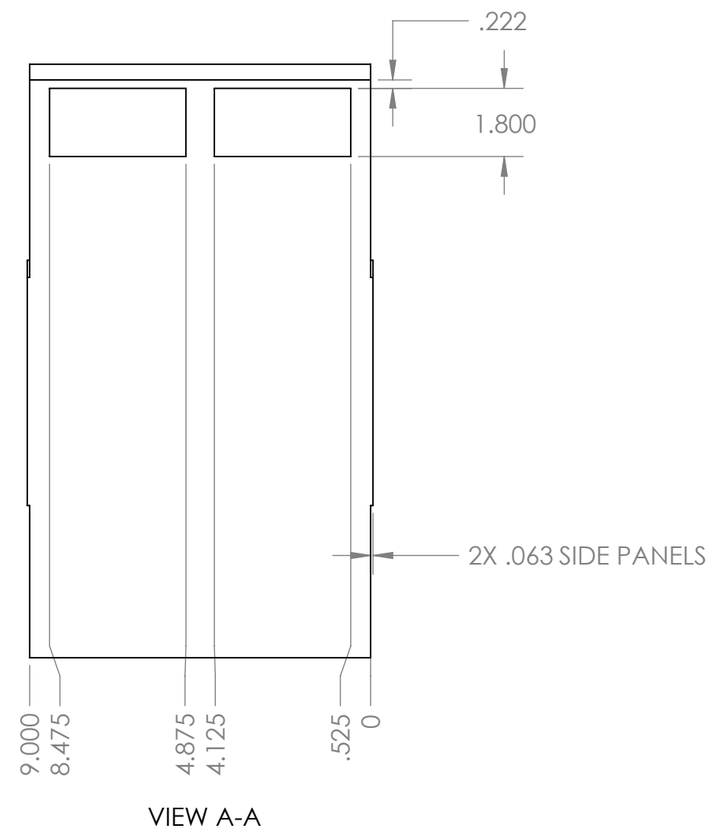

NOTES:
1. MATERIAL: 3000 OR 5000 SERIES ALUMINUM SHEET
2. FINISH: BLACK ANODIZE
3. REMOVE BURRS AND BREAK EDGES

SEE ENGINEERING RECORDS		TOLERANCE EXCEPT AS NOTED DIMENSIONS ARE IN INCHES DECIMAL .XX = ±0.020 .XXX = ±0.005 ANGLE .X= ±1°	ORIGINAL DATE OF DRAWING 2/6/11	CONTROL BRACKET	GEORGE C. MARSHALL SPACE FLIGHT CENTER NATIONAL AERONAUTICS AND SPACE ADMINISTATION Marshall Space Flight Center, AL 35812	
		MATERIAL 1	DRAFTSMAN BCW / STRESS			
			ENGINEER BCW / MNFG			
			MATERIALS / QA			
			CHECKER			
		HEAT TREAT	SUBMITTED		DWG SIZE B	081105121
NEXT ASSY	USED ON					
APPLICATION		FINAL FINISH 2	APPROVED	EST WT / SCALE 1:4 / CODE 339B2	SHEET 1 OF 1	

REVISIONS				
ZONE	SYM	DESCRIPTION	DATE	APPROVAL

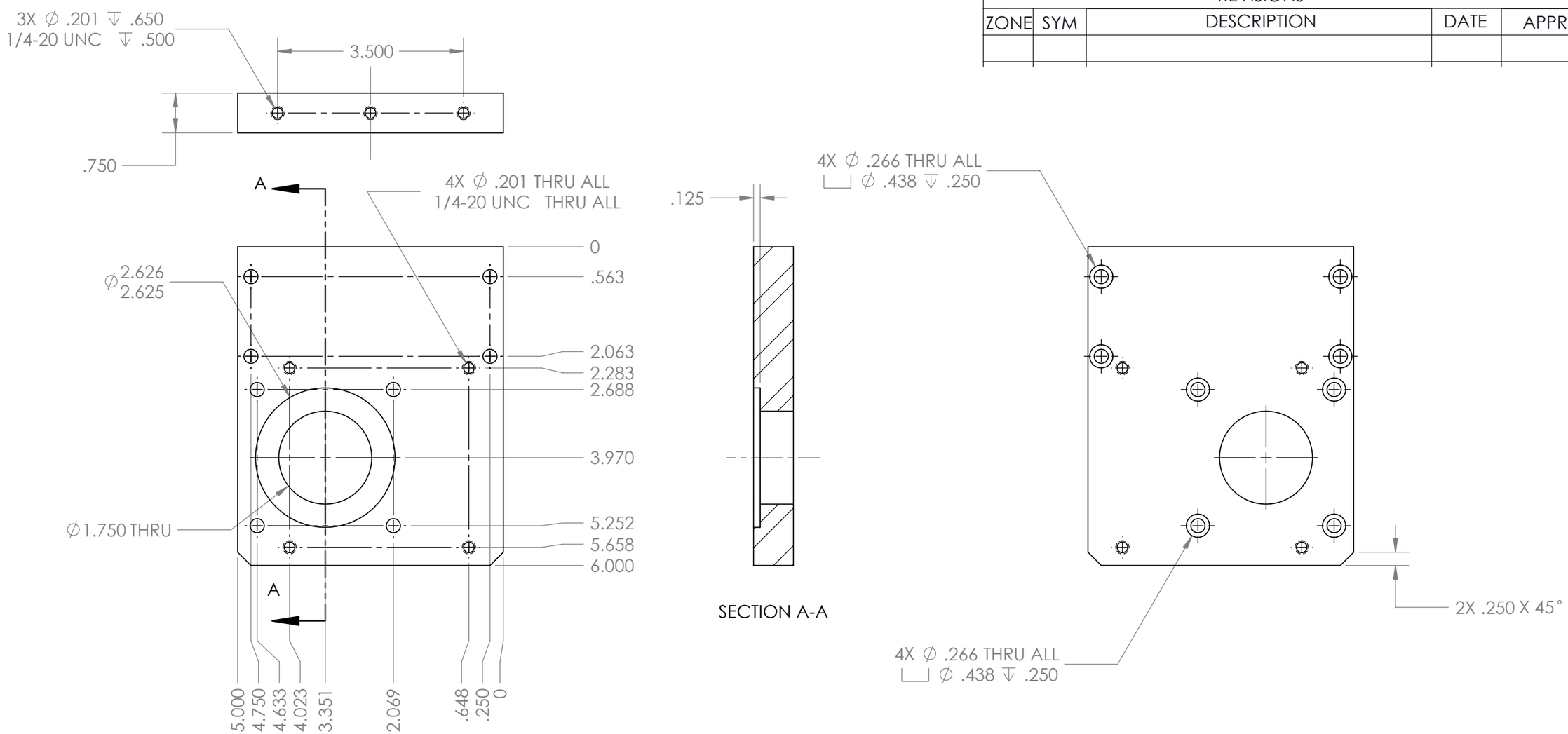

NOTES:
1. MATERIAL: STEEL PLATE, GROUND
2. FINISH: YELLOW ZINC CHROMATE PLATE
3. REMOVE BURRS AND BREAK EDGES

SEE ENGINEERING RECORDS		TOLERANCE EXCEPT AS NOTED DIMENSIONS ARE IN INCHES DECIMAL .XX = ±0.020 .XXX = ±0.005 ANGLE .X= ±1°	ORIGINAL DATE OF DRAWING 2/6/11	STROKE MOTOR BKT	GEORGE C. MARSHALL SPACE FLIGHT CENTER NATIONAL AERONAUTICS AND SPACE ADMINISTATION Marshall Space Flight Center, AL 35812	
		MATERIAL 1	DRAFTSMAN BCW / STRESS			
			ENGINEER BCW / MNFG			
			MATERIALS / QA			
			CHECKER			
NEXT ASSY	USED ON	HEAT TREAT	SUBMITTED		DWG SIZE B	081105122
APPLICATION		FINAL FINISH 2	APPROVED	EST WT / SCALE 1:2	CODE 339B2	SHEET 1 OF 1

REVISIONS				
ZONE	SYM	DESCRIPTION	DATE	APPROVAL

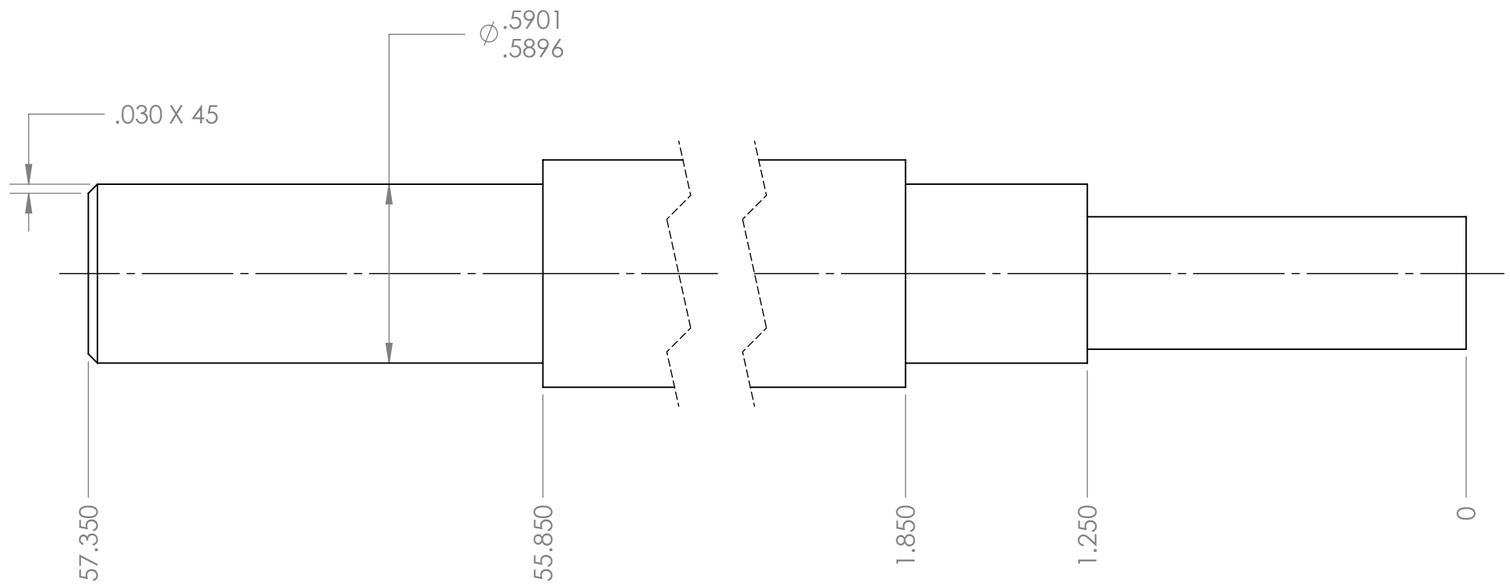

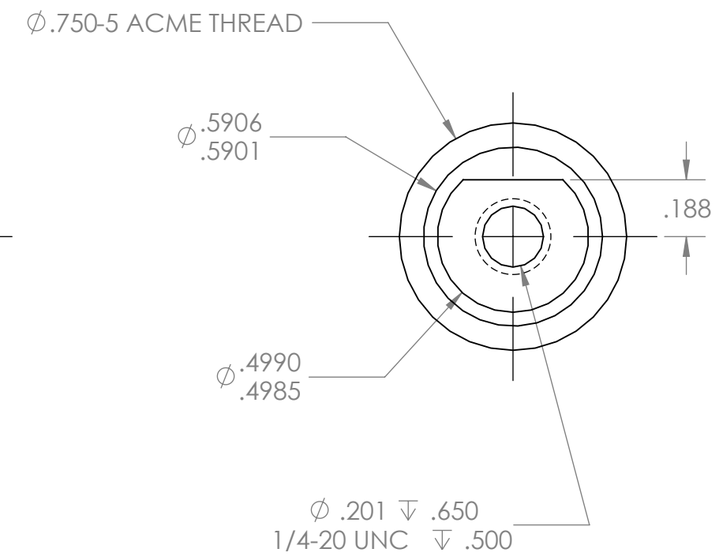

NOTES:
1. MAKE FROM 3/4-5 ACME THREADED ROD, 18-8 SS, MCMASTER 95061A217
2. REMOVE BURRS AND BREAK EDGES

SEE ENGINEERING RECORDS		TOLERANCE EXCEPT AS NOTED DIMENSIONS ARE IN INCHES DECIMAL .XX = ±0.020 .XXX = ±0.005 ANGLE .X= ± 1°	ORIGINAL DATE OF DRAWING 2/6/11	STROKE SCREW	GEORGE C. MARSHALL SPACE FLIGHT CENTER NATIONAL AERONAUTICS AND SPACE ADMINISTATION Marshall Space Flight Center, AL 35812
		MATERIAL 1	DRAFTSMAN BCW / STRESS		
			ENGINEER BCW / MNFG		
			MATERIALS / QA		DWG SIZE B — 081105124
			CHECKER		
		HEAT TREAT	SUBMITTED		
NEXT ASSY	USED ON				
APPLICATION		FINAL FINISH	APPROVED	EST WT / SCALE 2:1 / CODE 339B2	SHEET 1 OF 1

REVISIONS				
ZONE	SYM	DESCRIPTION	DATE	APPROVAL

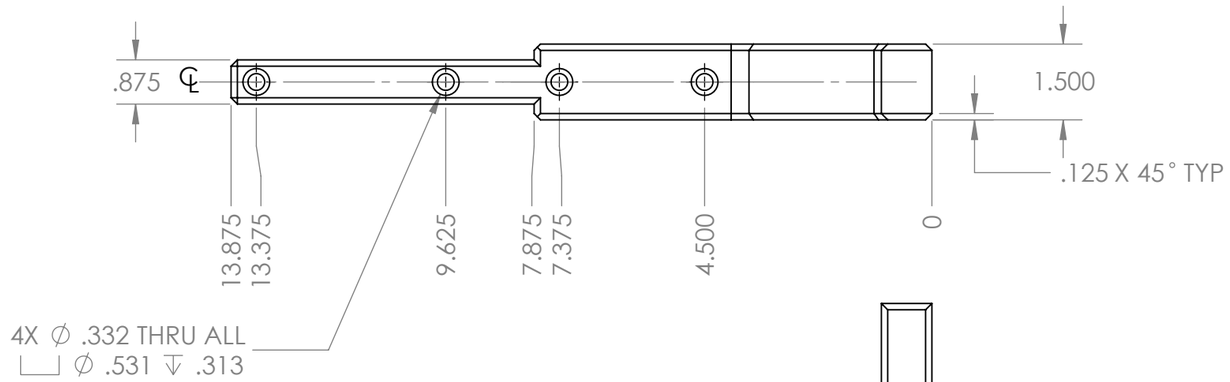

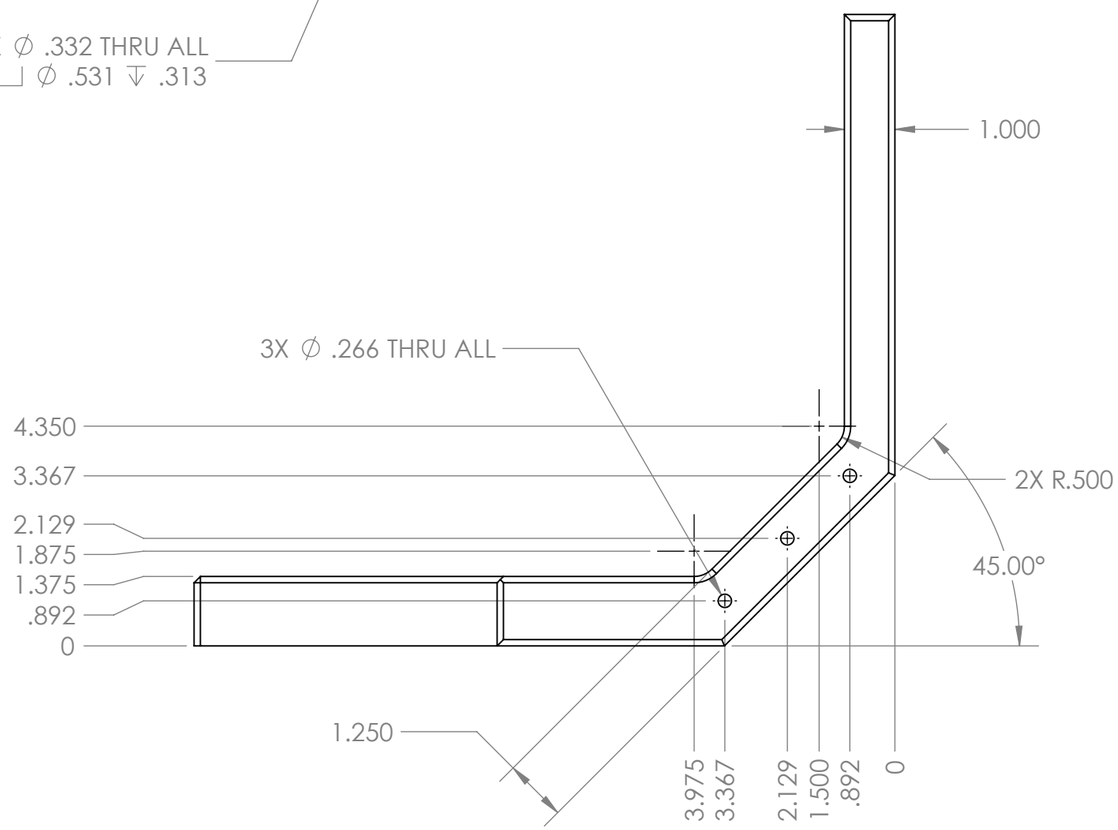

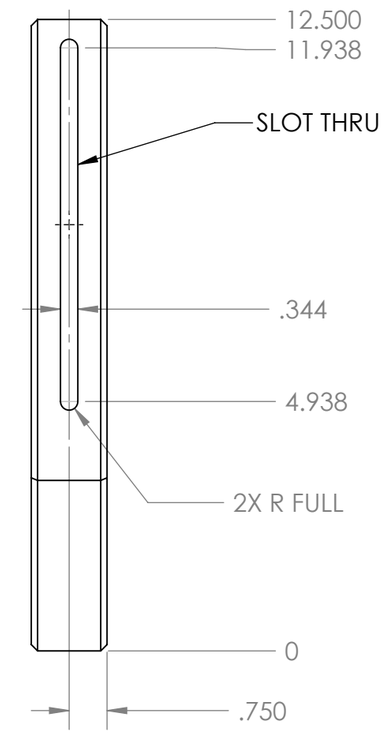

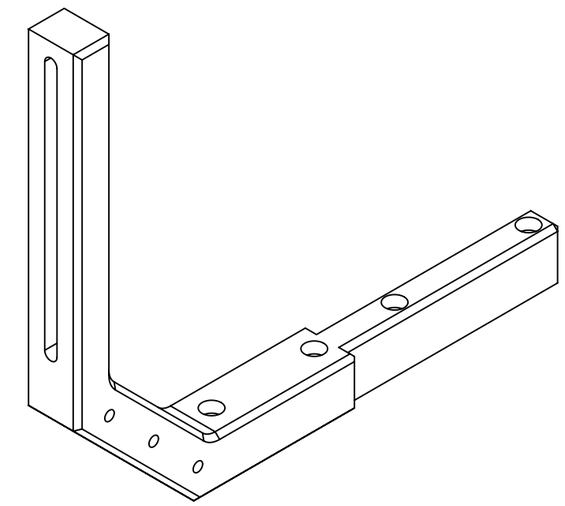

NOTES:
1. MATERIAL: 1018 GROUND STEEL PLATE
2. REMOVE BURRS AND BREAK EDGES
3. YELLOW ZINC CHROMATE PLATE

SEE ENGINEERING RECORDS		TOLERANCE EXCEPT AS NOTED DIMENSIONS ARE IN INCHES DECIMAL .XX = ±0.020 .XXX = ±0.005 ANGLE .X = ±1°	ORIGINAL DATE OF DRAWING 3/7/11	CORNER BRACKET	GEORGE C. MARSHALL SPACE FLIGHT CENTER NATIONAL AERONAUTICS AND SPACE ADMINISTATION Marshall Space Flight Center, AL 35812
		MATERIAL 1	DRAFTSMAN BCW / STRESS		
			ENGINEER BCW / MNFG		
			MATERIALS / QA		
			CHECKER		DWG SIZE B — 081105125
NEXT ASSY	USED ON	HEAT TREAT	SUBMITTED		
APPLICATION		FINAL FINISH 3	APPROVED	EST WT / SCALE 1:3 / CODE 339B2	SHEET 1 OF 1

REVISIONS				
ZONE	SYM	DESCRIPTION	DATE	APPROVAL

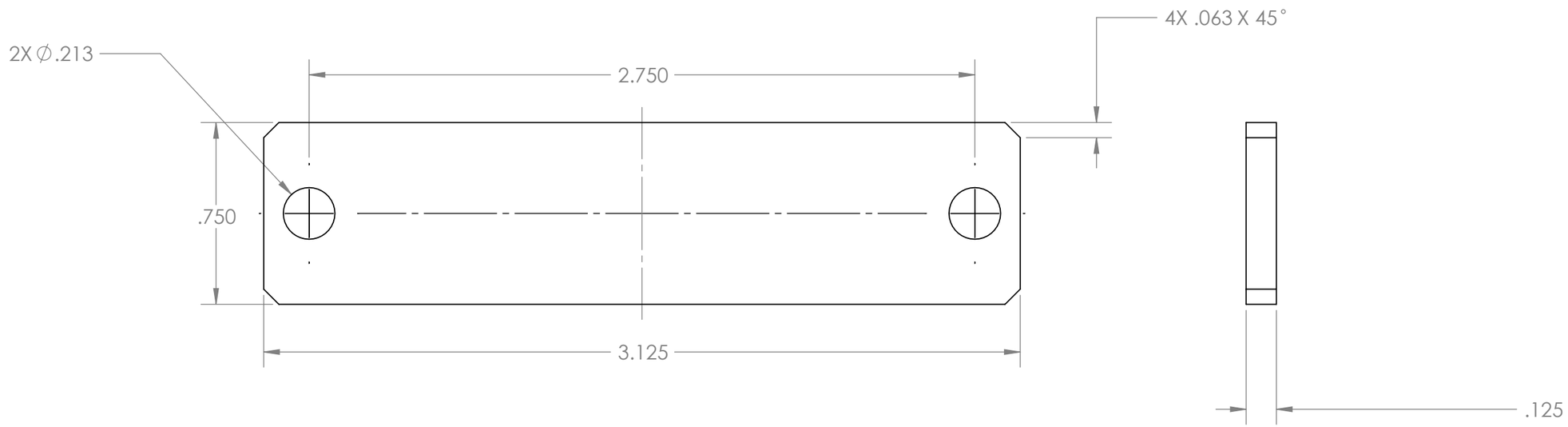

NOTES:
1. MATERIAL: 6061 ALUMINUM
2. FINISH: BLACK ANODIZE
3. REMOVE BURRS AND BREAK EDGES

		TOLERANCE EXCEPT AS NOTED DIMENSIONS ARE IN INCHES DECIMAL .XX = ±0.020 .XXX = ±0.005 ANGLE .X= ±1°	ORIGINAL DATE OF DRAWING 3/16/11	COVER	GEORGE C. MARSHALL SPACE FLIGHT CENTER NATIONAL AERONAUTICS AND SPACE ADMINISTATION Marshall Space Flight Center, AL 35812		
SEE ENGINEERING RECORDS			DRAFTSMAN BCW / STRESS				
			ENGINEER BCW / MNFG				
		MATERIAL 1	MATERIALS / QA				
			CHECKER				
		HEAT TREAT	SUBMITTED		DWG SIZE B	081105126	
NEXT ASSY	USED ON						
APPLICATION		FINAL FINISH 2	APPROVED	EST WT	SCALE 2:1	CODE 339B2	SHEET 1 OF 1

REVISIONS				
ZONE	SYM	DESCRIPTION	DATE	APPROVAL

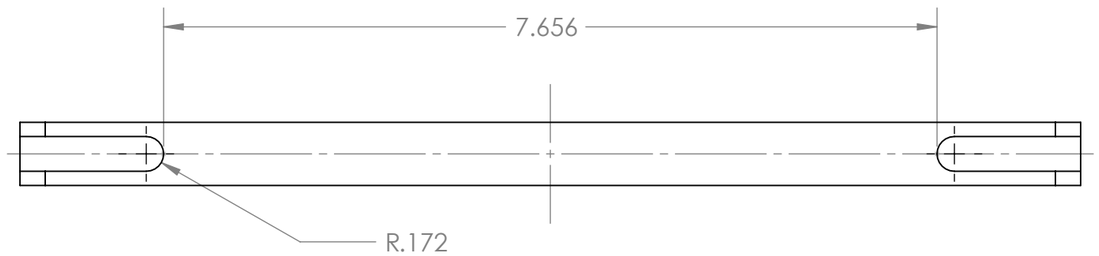

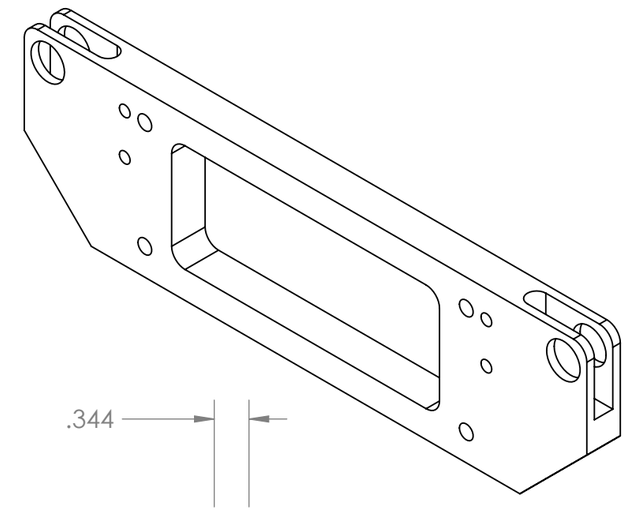

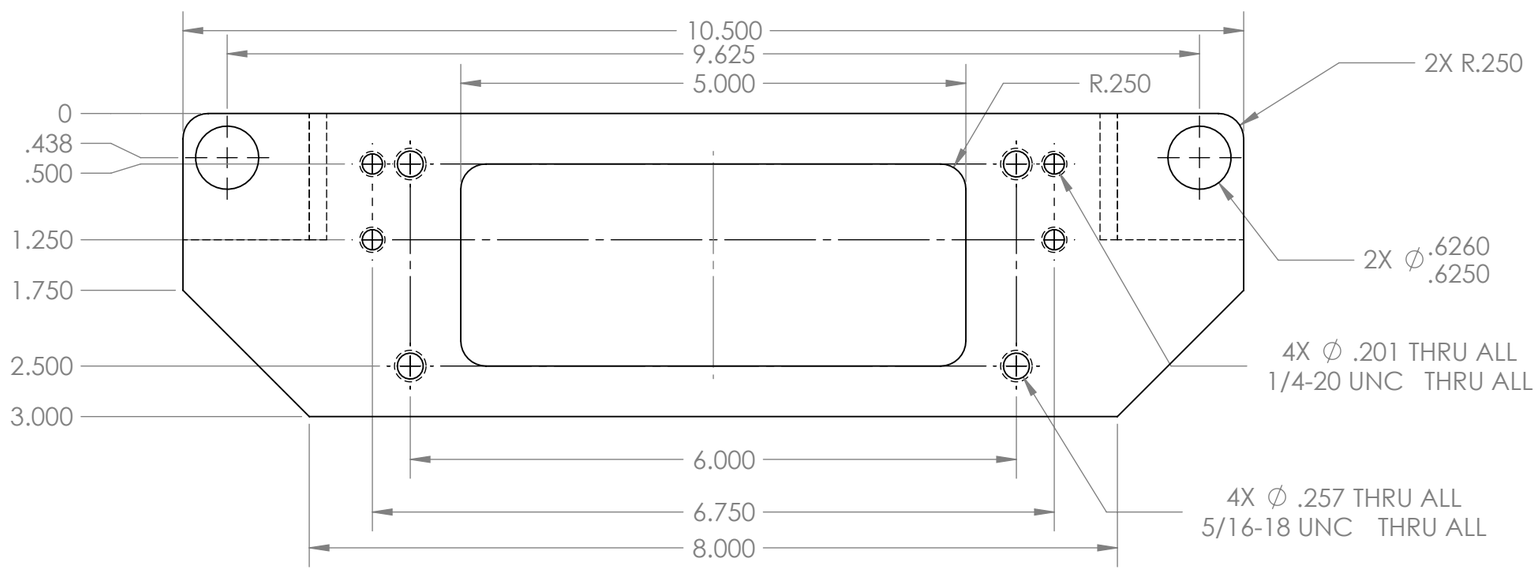

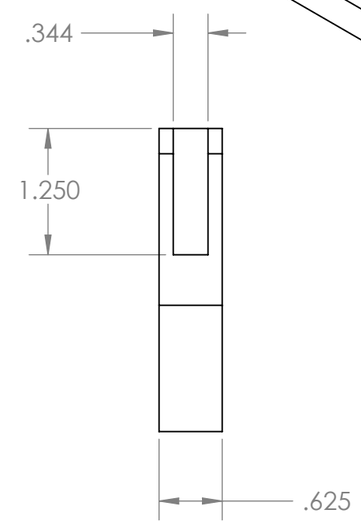

NOTES:
1. MATERIAL: STEEL PLATE, GROUND
2. FINISH: YELLOW ZINC CHROMATE PLATE
3. REMOVE BURRS AND BREAK EDGES

SEE ENGINEERING RECORDS		TOLERANCE EXCEPT AS NOTED DIMENSIONS ARE IN INCHES DECIMAL .XX = ±0.020 .XXX = ±0.005 ANGLE .X = ±1°	ORIGINAL DATE OF DRAWING 2/6/11	VERT CAR	GEORGE C. MARSHALL SPACE FLIGHT CENTER NATIONAL AERONAUTICS AND SPACE ADMINISTATION Marshall Space Flight Center, AL 35812	
		MATERIAL 1	DRAFTSMAN BCW / STRESS			
			ENGINEER BCW / MNFG			
			MATERIALS / QA			
			CHECKER			
		HEAT TREAT	SUBMITTED		DWG SIZE B	081105127
NEXT ASSY	USED ON					
APPLICATION		FINAL FINISH 2	APPROVED	EST WT / SCALE 1:1.5 / CODE 339B2	SHEET 1 OF 1	

REVISIONS				
ZONE	SYM	DESCRIPTION	DATE	APPROVAL

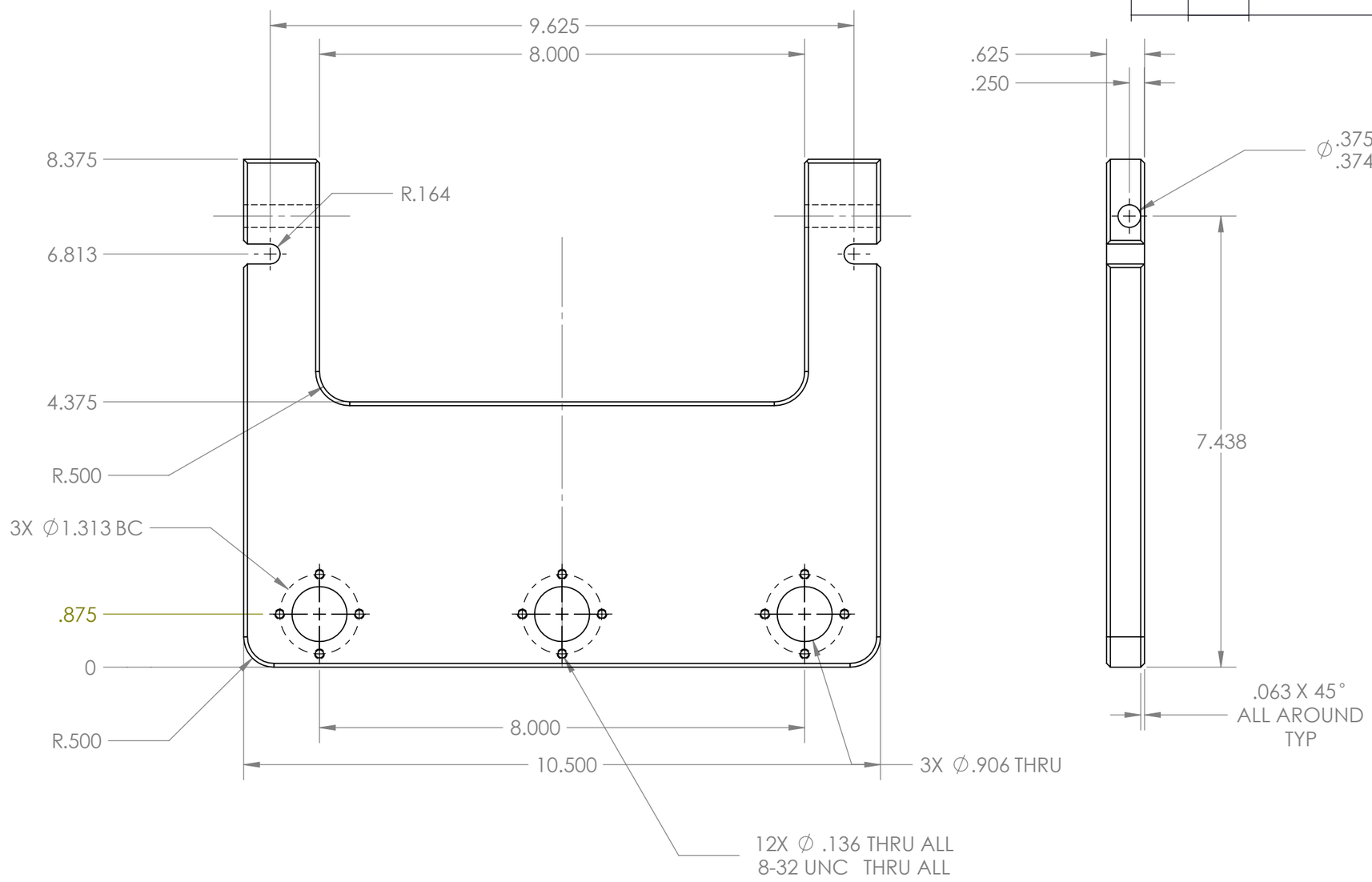

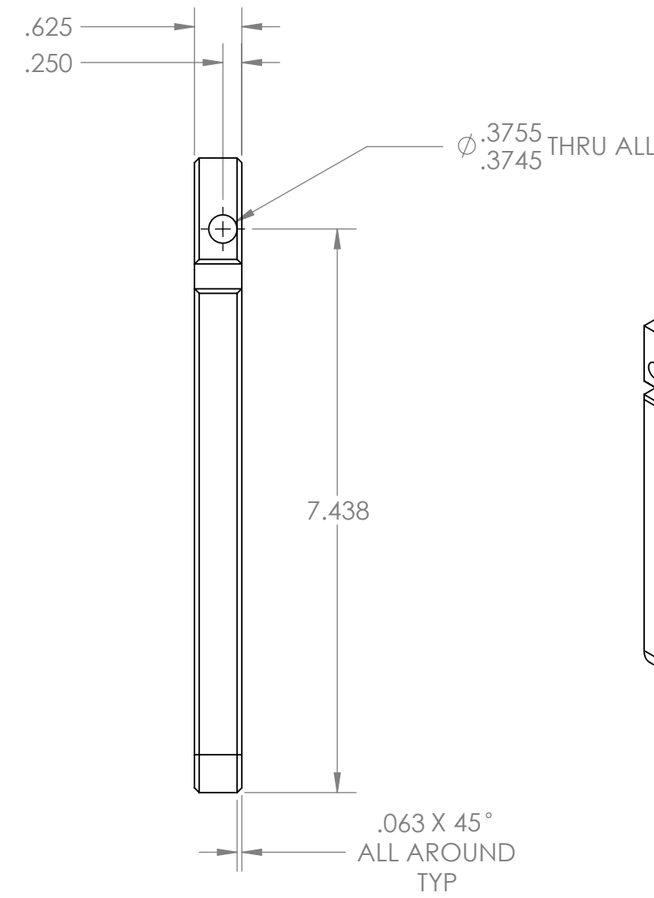

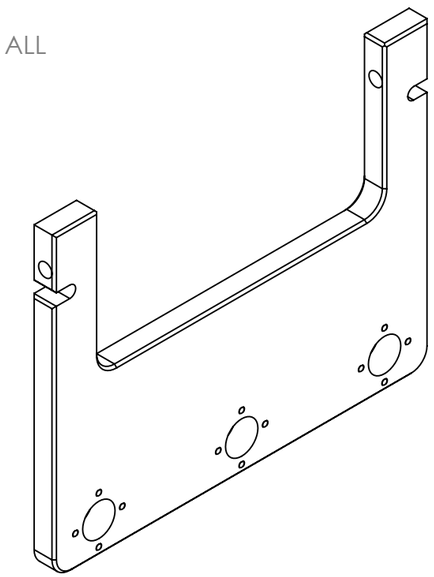

NOTES:
1. MATERIAL: STEEL PLATE, GROUND
2. FINISH: YELLOW ZINC CHROMATE PLATE
3. REMOVE BURRS AND BREAK EDGES

SEE ENGINEERING RECORDS		TOLERANCE EXCEPT AS NOTED DIMENSIONS ARE IN INCHES DECIMAL .XX = ±0.020 .XXX = ±0.005 ANGLE .X= ±1°	ORIGINAL DATE OF DRAWING 3/6/11	LAP DRIVE	GEORGE C. MARSHALL SPACE FLIGHT CENTER NATIONAL AERONAUTICS AND SPACE ADMINISTATION Marshall Space Flight Center, AL 35812	
		MATERIAL 1	DRAFTSMAN BCW / STRESS			
			ENGINEER BCW / MNFG			
			MATERIALS / QA			
			CHECKER			
NEXT ASSY	USED ON	HEAT TREAT	SUBMITTED		DWG SIZE B	081105128
APPLICATION		FINAL FINISH 2	APPROVED	EST WT / SCALE 1:2 / CODE 339B2	SHEET 1 OF 1	

ITEM NO.	PART NUMBER	DESCRIPTION	QTY.
1	LINEAR SHAFT .50 X 12 TAPPED	MCMASTER 6649K2	1
2	TOOLING BALL .375	MCMASTER 8481A26	1
3	EPOXY ADHESIVE 3M 2216 GRAY	MCMASTER 75045A65	1

REVISIONS				
ZONE	SYM	DESCRIPTION	DATE	APPROVAL

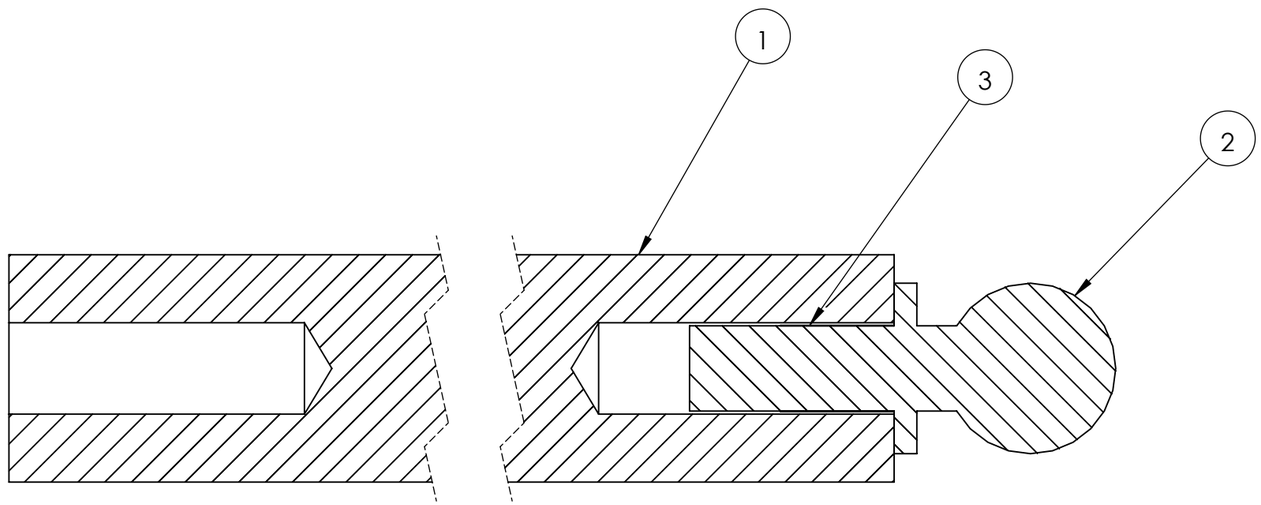

SECTION A-A

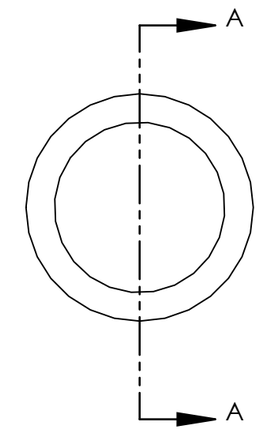

NOTES:
1. BOND 1 AND 2 WITH ADHESIVE 3, FOLLOW MANUFACTURER'S INSTRUCTIONS

SEE ENGINEERING RECORDS		TOLERANCE EXCEPT AS NOTED DIMENSIONS ARE IN INCHES DECIMAL .XX = ±0.020 .XXX = ±0.005 ANGLE .X= ±1°	ORIGINAL DATE OF DRAWING 3/6/11	LAP DRIVE ROD	GEORGE C. MARSHALL SPACE FLIGHT CENTER NATIONAL AERONAUTICS AND SPACE ADMINISTATION Marshall Space Flight Center, AL 35812	
		MATERIAL	DRAFTSMAN BCW / STRESS			
			ENGINEER BCW / MNFG			
			MATERIALS / QA			
			CHECKER			
		HEAT TREAT	SUBMITTED		DWG SIZE B	081105129
NEXT ASSY	USED ON					
APPLICATION		FINAL FINISH	APPROVED	EST WT / SCALE 3:1	CODE 339B2	SHEET 1 OF 1

REVISIONS				
ZONE	SYM	DESCRIPTION	DATE	APPROVAL

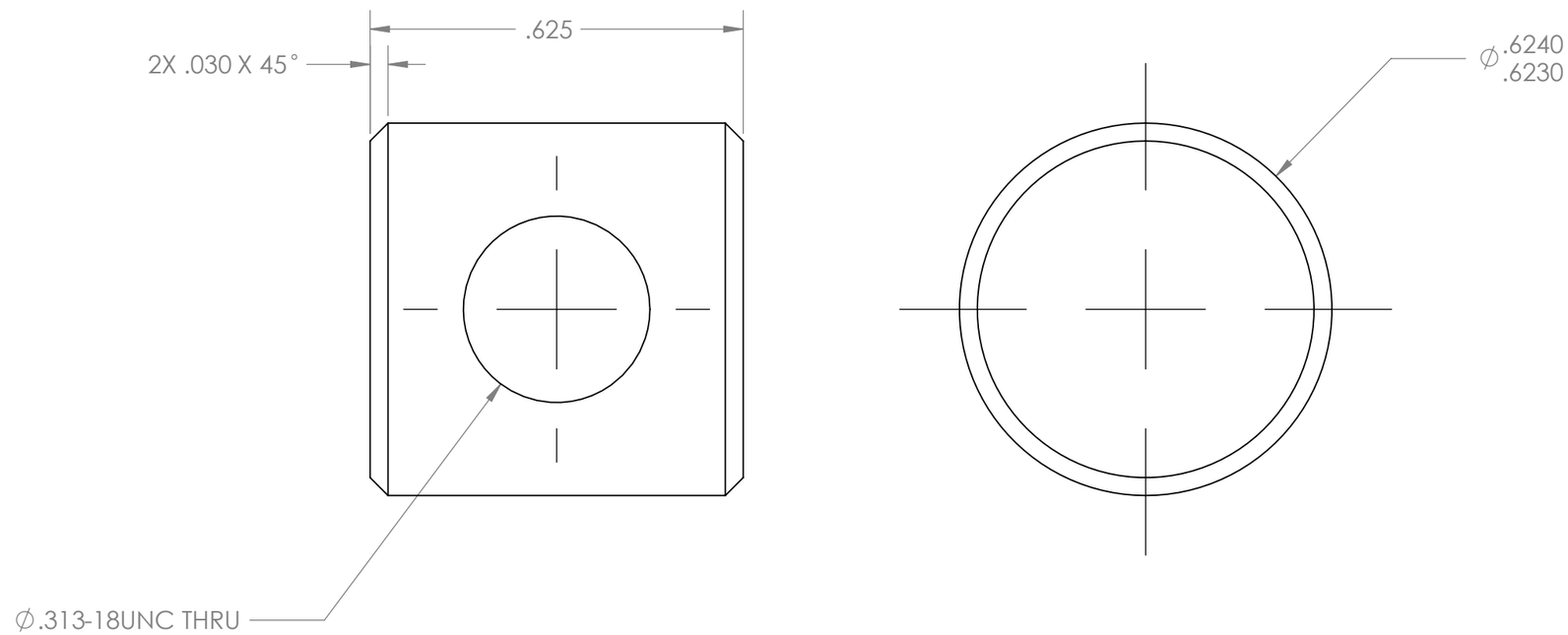

NOTES:
1. MATERIAL: 304 SS ROD
2. FINISH: NONE
3. REMOVE BURRS AND BREAK EDGES

SEE ENGINEERING RECORDS		TOLERANCE EXCEPT AS NOTED DIMENSIONS ARE IN INCHES DECIMAL .XX = ±0.020 .XXX = ±0.005 ANGLE .X= ±1°	ORIGINAL DATE OF DRAWING 3/6/11	BARREL NUT	GEORGE C. MARSHALL SPACE FLIGHT CENTER NATIONAL AERONAUTICS AND SPACE ADMINISTATION Marshall Space Flight Center, AL 35812	
		MATERIAL 1	DRAFTSMAN BCW / STRESS			
			ENGINEER BCW / MNFG			
			MATERIALS / QA			
			CHECKER			
		HEAT TREAT	SUBMITTED		DWG SIZE B	081105130
NEXT ASSY	USED ON					
APPLICATION		FINAL FINISH 2	APPROVED	EST WT / SCALE 4:1 / CODE 339B2	SHEET 1 OF 1	

ITEM NO.	PART NUMBER	DESCRIPTION	QTY.
1	081105131 BELT GUARD	081105131	1
2	RIVET NUT .25-20	MCMASTER 93483A681	3

REVISIONS				
ZONE	SYM	DESCRIPTION	DATE	APPROVAL

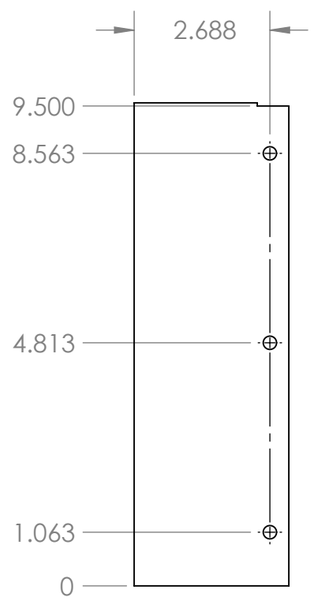

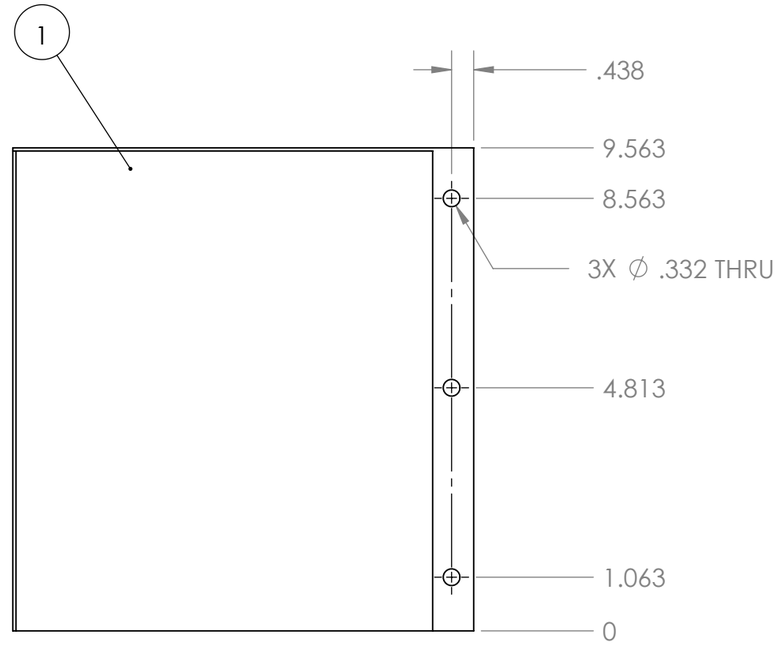

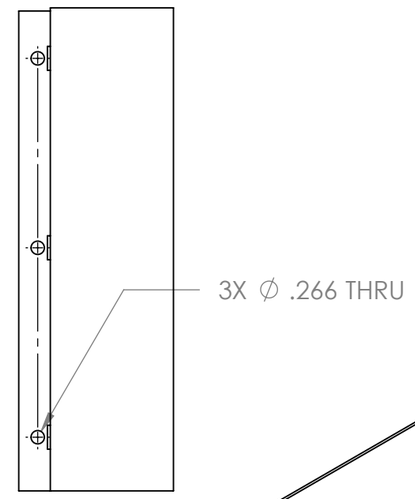

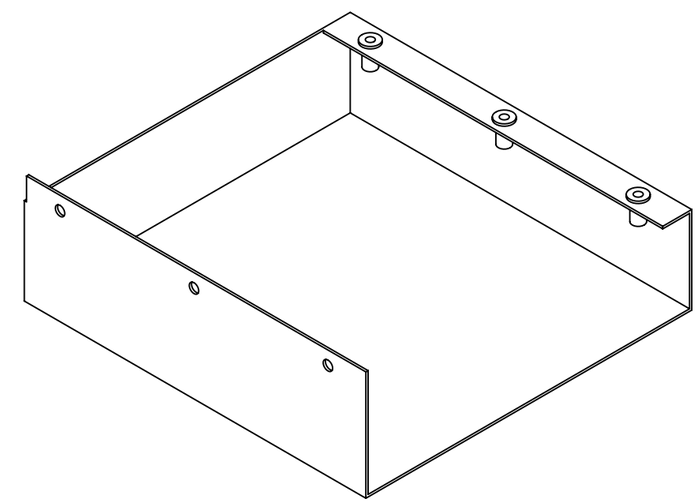

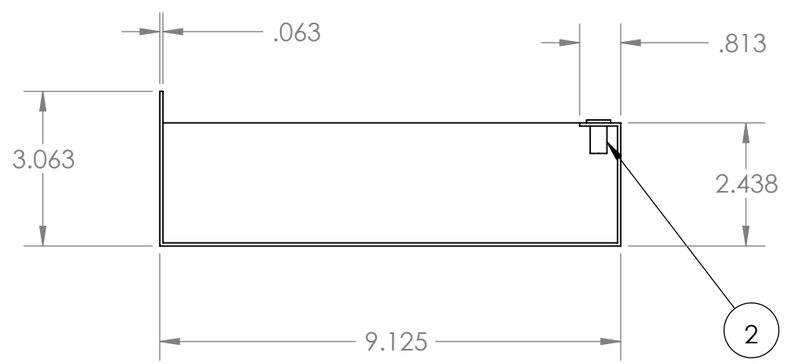

NOTES:
1. MATERIAL: 3000 OR 5000 SERIES ALUMINUM SHEET
2. WELD JOINTS AS NEEDED
3. REMOVE BURRS AND BREAK EDGES
4. PAINT BLACK

SEE ENGINEERING RECORDS		TOLERANCE EXCEPT AS NOTED DIMENSIONS ARE IN INCHES DECIMAL .XX = ±0.020 .XXX = ±0.005 ANGLE .X= ±1°	ORIGINAL DATE OF DRAWING 3/6/11	BELT GUARD	GEORGE C. MARSHALL SPACE FLIGHT CENTER NATIONAL AERONAUTICS AND SPACE ADMINISTATION Marshall Space Flight Center, AL 35812	
		MATERIAL 1	DRAFTSMAN BCW / STRESS			
			ENGINEER BCW / MNFG			
			MATERIALS / QA			
			CHECKER			
NEXT ASSY	USED ON	HEAT TREAT	SUBMITTED		DWG SIZE B	081105131
APPLICATION		FINAL FINISH 4	APPROVED	EST WT / SCALE 1:3 / CODE 339B2	SHEET 1 OF 1	

REVISIONS				
ZONE	SYM	DESCRIPTION	DATE	APPROVAL

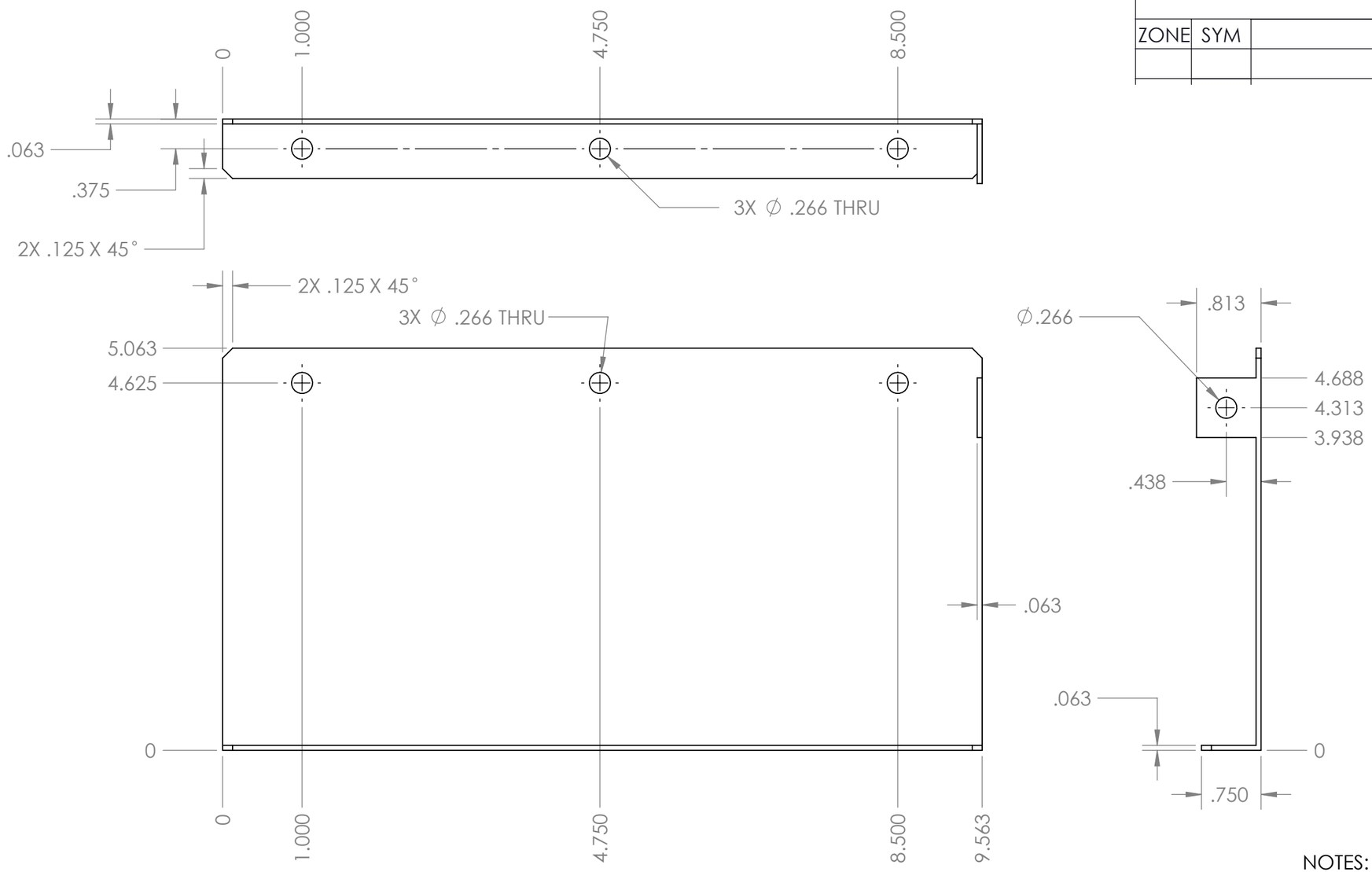

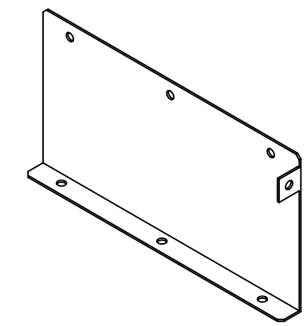

NOTES:
1. MATERIAL: 3000 OR 5000 SERIES ALUMINUM SHEET
2. WELD JOINTS AS NEEDED
3. REMOVE BURRS AND BREAK EDGES
4. PAINT BLACK

SEE ENGINEERING RECORDS		TOLERANCE EXCEPT AS NOTED DIMENSIONS ARE IN INCHES DECIMAL .XX = ±0.020 .XXX = ±0.005 ANGLE .X = ±1°	ORIGINAL DATE OF DRAWING 3/6/11	BELT GUARD SIDE	GEORGE C. MARSHALL SPACE FLIGHT CENTER NATIONAL AERONAUTICS AND SPACE ADMINISTATION Marshall Space Flight Center, AL 35812	
		MATERIAL 1	DRAFTSMAN BCW / STRESS			
			ENGINEER BCW / MNFG			
			MATERIALS / QA			
			CHECKER			
NEXT ASSY	USED ON	HEAT TREAT	SUBMITTED		DWG SIZE B	081105132
APPLICATION		FINAL FINISH 4	APPROVED	EST WT / SCALE 1:1.5	CODE 339B2	SHEET 1 OF 1

REVISIONS				
ZONE	SYM	DESCRIPTION	DATE	APPROVAL

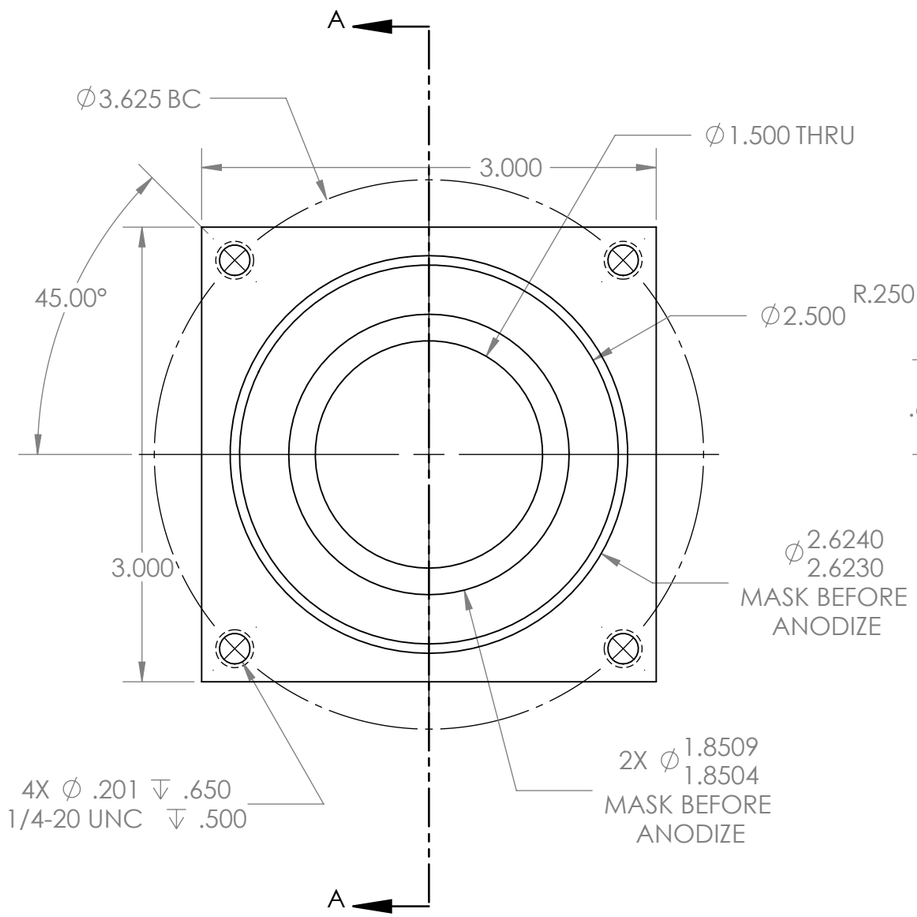

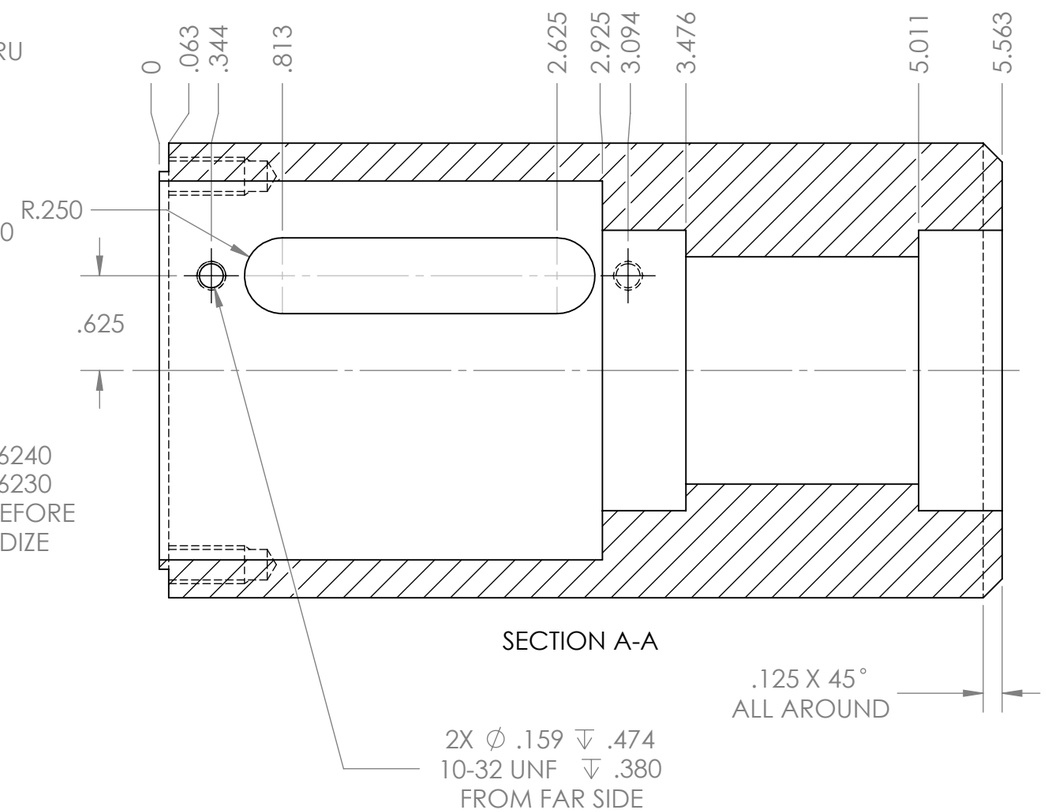

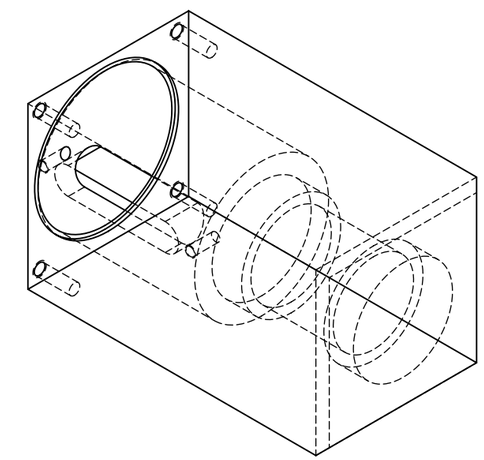

NOTES:
1. MATERIAL: 6061 ALUMINUM
2. FINISH: BLACK ANODIZE
3. REMOVE BURRS AND BREAK EDGES

		TOLERANCE EXCEPT AS NOTED DIMENSIONS ARE IN INCHES DECIMAL .XX = ±0.020 .XXX = ±0.005 ANGLE .X= ±1°	ORIGINAL DATE OF DRAWING 3/6/11	OSCILLATOR TOWER	GEORGE C. MARSHALL SPACE FLIGHT CENTER NATIONAL AERONAUTICS AND SPACE ADMINISTATION Marshall Space Flight Center, AL 35812	
SEE ENGINEERING RECORDS		MATERIAL 1	DRAFTSMAN BCW / STRESS			
			ENGINEER BCW / MNFG			
			MATERIALS / QA			
			CHECKER			
		HEAT TREAT	SUBMITTED		DWG SIZE B	081105133
NEXT ASSY	USED ON					
APPLICATION		FINAL FINISH 2	APPROVED	EST WT / SCALE 1:1 / CODE 339B2	SHEET 1 OF 1	

REVISIONS				
ZONE	SYM	DESCRIPTION	DATE	APPROVAL

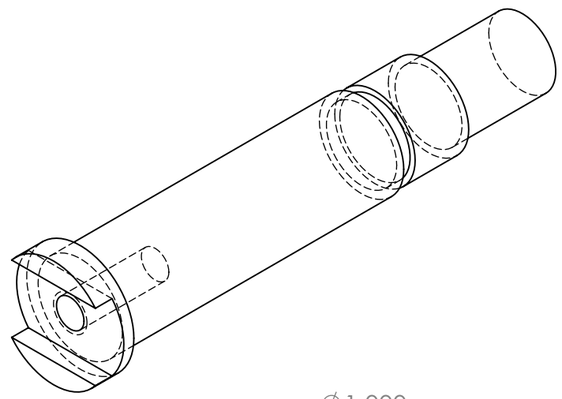

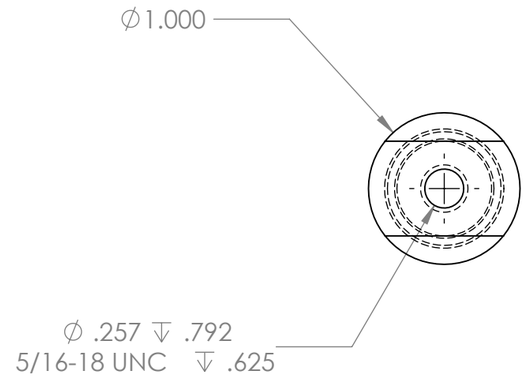

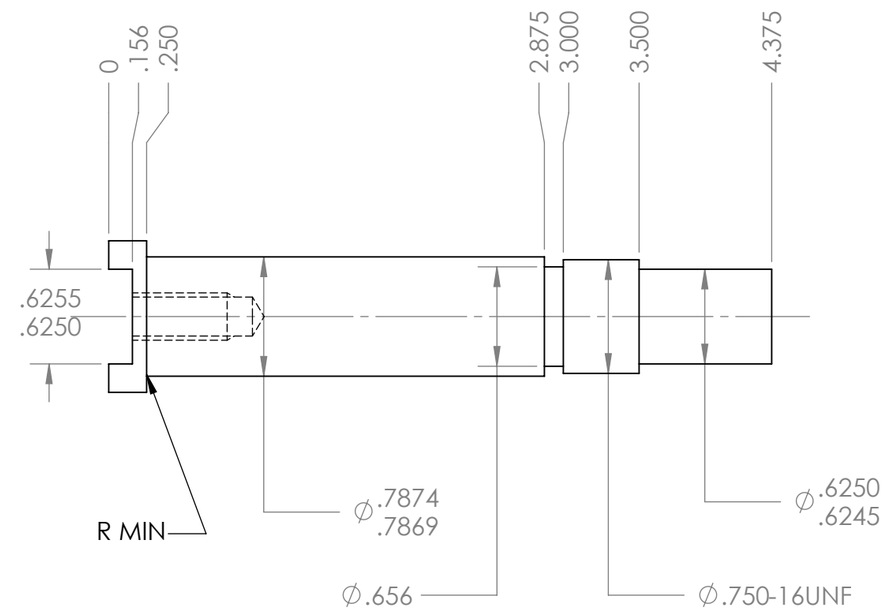

NOTES:
1. MATERIAL: 17-4PH STAINLESS H1100 CONDITION
2. REMOVE BURRS AND BREAK EDGES FINISH 32 MICROINCHES OVER ALL

		TOLERANCE EXCEPT AS NOTED DIMENSIONS ARE IN INCHES DECIMAL .XX = ±0.020 .XXX = ±0.005 ANGLE .X= ±1°	ORIGINAL DATE OF DRAWING 3/6/11	OSCILLATOR SHAFT	GEORGE C. MARSHALL SPACE FLIGHT CENTER NATIONAL AERONAUTICS AND SPACE ADMINISTATION Marshall Space Flight Center, AL 35812	
SEE ENGINEERING RECORDS			DRAFTSMAN BCW / STRESS			
			ENGINEER BCW / MNFG			
		MATERIAL 1	MATERIALS / QA		DWG SIZE B	081105134
			CHECKER			
		HEAT TREAT	SUBMITTED			
NEXT ASSY	USED ON					
APPLICATION		FINAL FINISH	APPROVED	EST WT / SCALE 1:1	CODE 339B2	SHEET 1 OF 1

REVISIONS				
ZONE	SYM	DESCRIPTION	DATE	APPROVAL

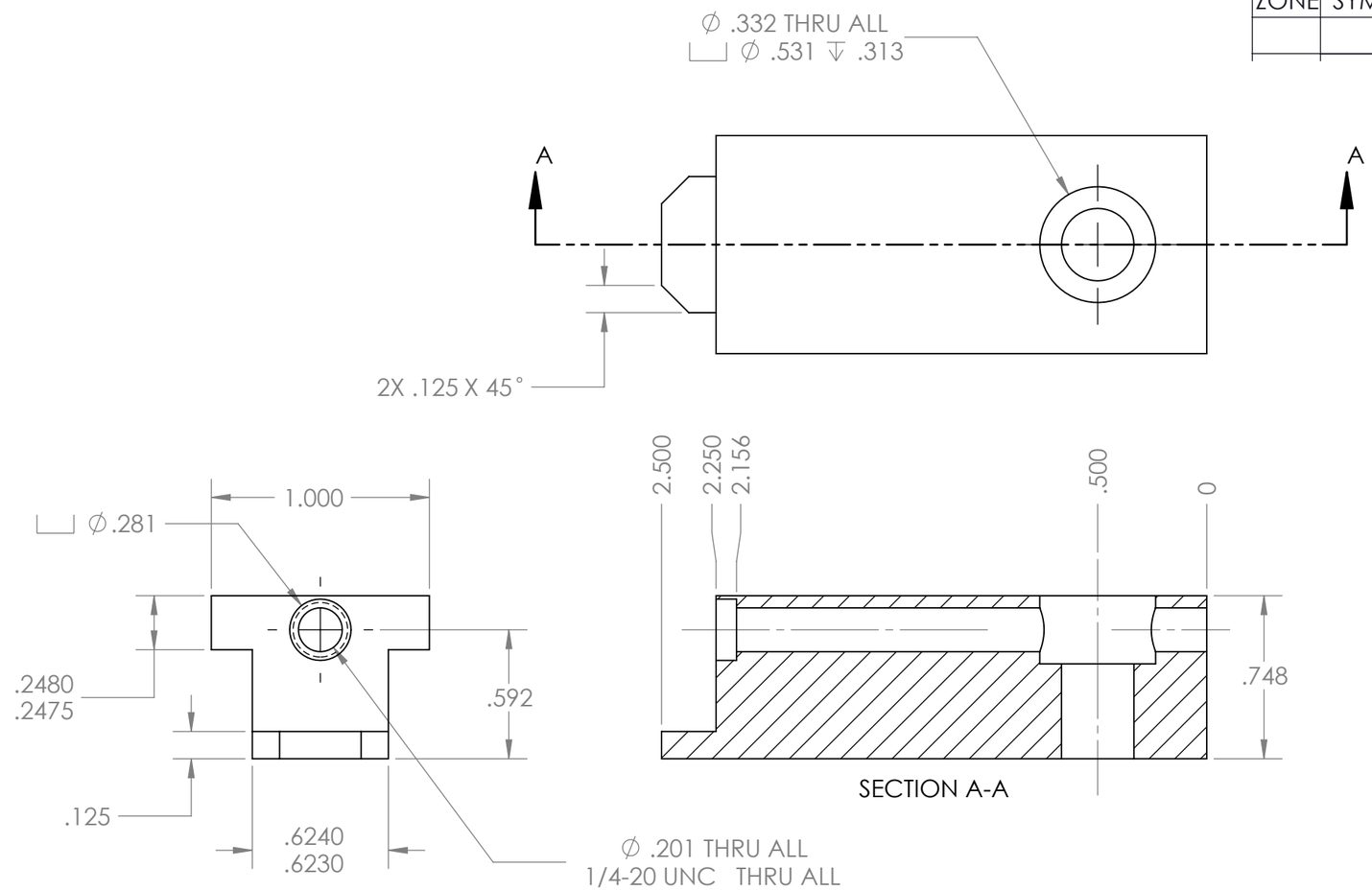

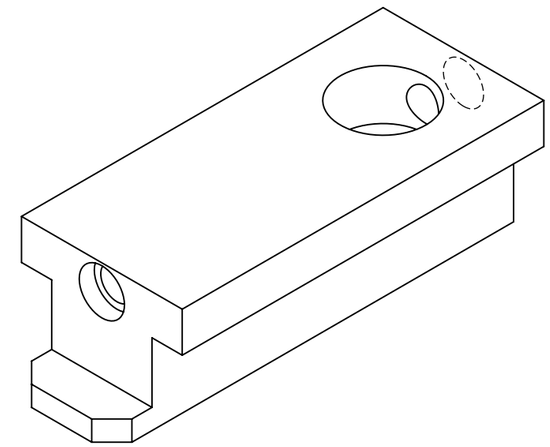

NOTES:
1. MATERIAL: 360 BRASS
2. FINISH: NONE
3. REMOVE BURRS AND BREAK EDGES

		TOLERANCE EXCEPT AS NOTED DIMENSIONS ARE IN INCHES DECIMAL .XX = ±0.020 .XXX = ±0.005 ANGLE .X= ±1°	ORIGINAL DATE OF DRAWING 3/6/11		OSCILLATOR HEAD	GEORGE C. MARSHALL SPACE FLIGHT CENTER NATIONAL AERONAUTICS AND SPACE ADMINISTATION Marshall Space Flight Center, AL 35812	
SEE ENGINEERING RECORDS			DRAFTSMAN BCW	STRESS			
			ENGINEER BCW	MNFG			
		MATERIAL 1	MATERIALS	QA			
			CHECKER				
		HEAT TREAT	SUBMITTED			DWG SIZE B	081105135
NEXT ASSY	USED ON						
APPLICATION		FINAL FINISH 2	APPROVED	EST WT	SCALE 1.5:1	CODE 339B2	SHEET 1 OF 1

REVISIONS				
ZONE	SYM	DESCRIPTION	DATE	APPROVAL

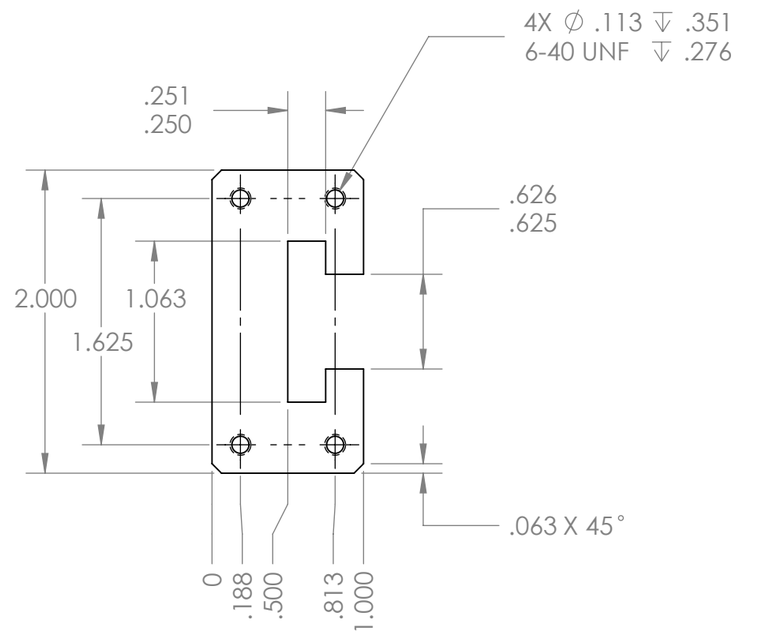

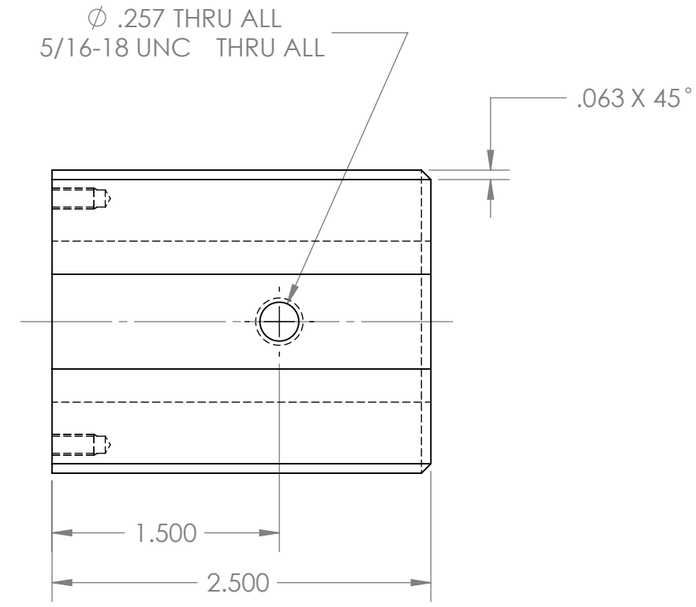

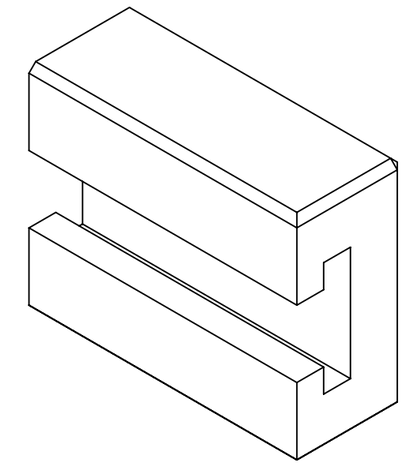

NOTES:
1. MATERIAL: STEEL PLATE, GROUND
2. FINISH: YELLOW ZINC CHROMATE PLATE
3. REMOVE BURRS AND BREAK EDGES

SEE ENGINEERING RECORDS		TOLERANCE EXCEPT AS NOTED DIMENSIONS ARE IN INCHES DECIMAL .XX = ±0.020 .XXX = ±0.005 ANGLE .X= ±1°	ORIGINAL DATE OF DRAWING 3/6/11	OSCILLATOR SLIDE	GEORGE C. MARSHALL SPACE FLIGHT CENTER NATIONAL AERONAUTICS AND SPACE ADMINISTATION Marshall Space Flight Center, AL 35812
		MATERIAL 1	DRAFTSMAN BCW / STRESS		
			ENGINEER BCW / MNFG		
			MATERIALS / QA		
			CHECKER		DWG SIZE B — 081105136
NEXT ASSY	USED ON	HEAT TREAT	SUBMITTED		
APPLICATION		FINAL FINISH 2	APPROVED	EST WT / SCALE 1:1 / CODE 339B2	SHEET 1 OF 1

REVISIONS				
ZONE	SYM	DESCRIPTION	DATE	APPROVAL

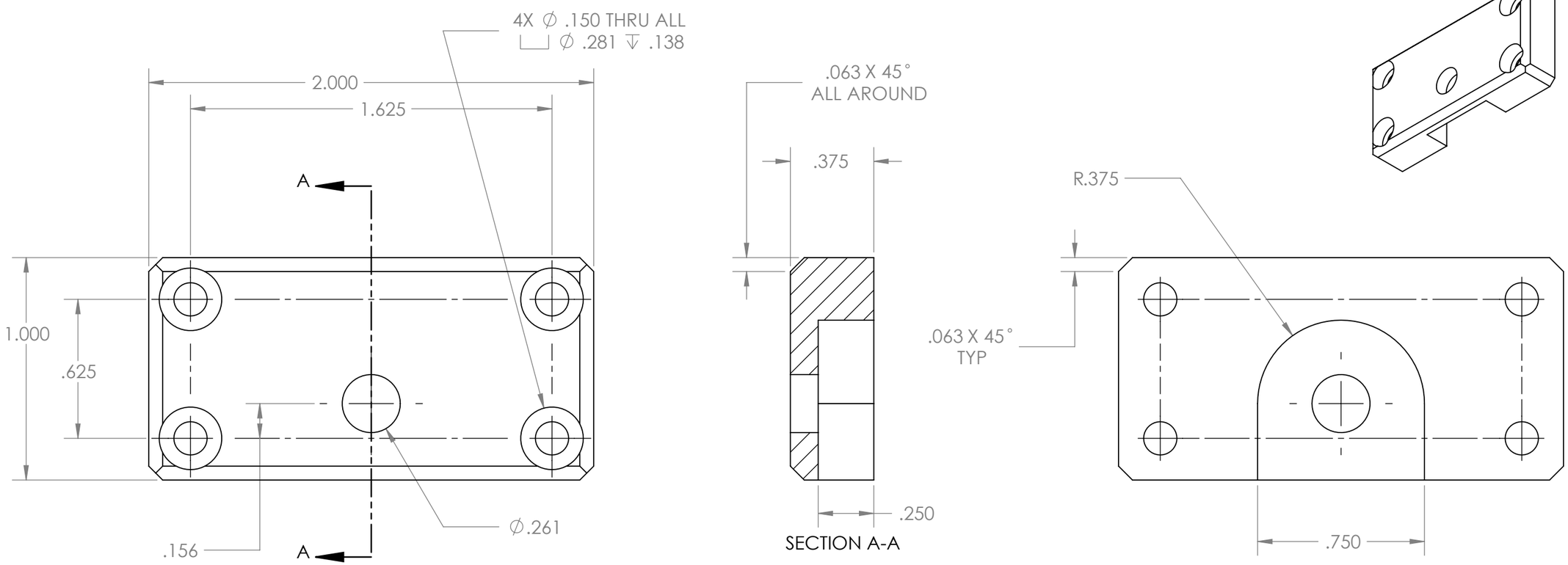

NOTES:
1. MATERIAL: 6061 ALUMINUM
2. FINISH: BLACK ANODIZE
3. REMOVE BURRS AND BREAK EDGES

		TOLERANCE EXCEPT AS NOTED DIMENSIONS ARE IN INCHES DECIMAL .XX = ±0.020 .XXX = ±0.005 ANGLE .X= ±1°	ORIGINAL DATE OF DRAWING 3/6/11	OSCILLATOR CAP	GEORGE C. MARSHALL SPACE FLIGHT CENTER NATIONAL AERONAUTICS AND SPACE ADMINISTATION Marshall Space Flight Center, AL 35812		
SEE ENGINEERING RECORDS			DRAFTSMAN BCW / STRESS				
			ENGINEER BCW / MNFG				
		MATERIAL 1	MATERIALS / QA				
			CHECKER		DWG SIZE B	081105137	
NEXT ASSY	USED ON	HEAT TREAT	SUBMITTED				
APPLICATION		FINAL FINISH 2	APPROVED	EST WT	SCALE 2:1	CODE 339B2	SHEET 1 OF 1

REVISIONS				
ZONE	SYM	DESCRIPTION	DATE	APPROVAL

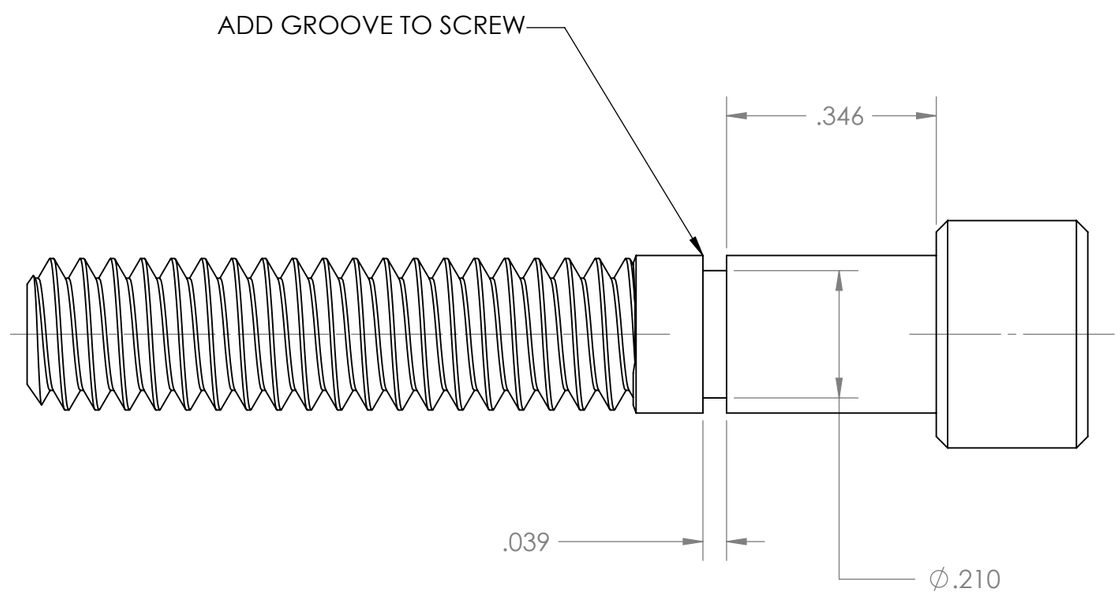

NOTES:
1. MATERIAL: MAKE FROM SHCS .25-20UNC X 1.5 MCMASTER 90128A251

		TOLERANCE EXCEPT AS NOTED DIMENSIONS ARE IN INCHES DECIMAL .XX = ±0.020 .XXX = ±0.005 ANGLE .X= ±1°	ORIGINAL DATE OF DRAWING 3/6/11	OSCILLATOR SCREW	GEORGE C. MARSHALL SPACE FLIGHT CENTER NATIONAL AERONAUTICS AND SPACE ADMINISTATION Marshall Space Flight Center, AL 35812	
SEE ENGINEERING RECORDS			DRAFTSMAN BCW / STRESS			
			ENGINEER BCW / MNFG			
		MATERIAL 1	MATERIALS / QA			
			CHECKER		DWG SIZE B	081105138
		HEAT TREAT	SUBMITTED			
NEXT ASSY	USED ON					
APPLICATION		FINAL FINISH	APPROVED	EST WT / SCALE 4:1	CODE 339B2	SHEET 1 OF 1

REVISIONS				
ZONE	SYM	DESCRIPTION	DATE	APPROVAL

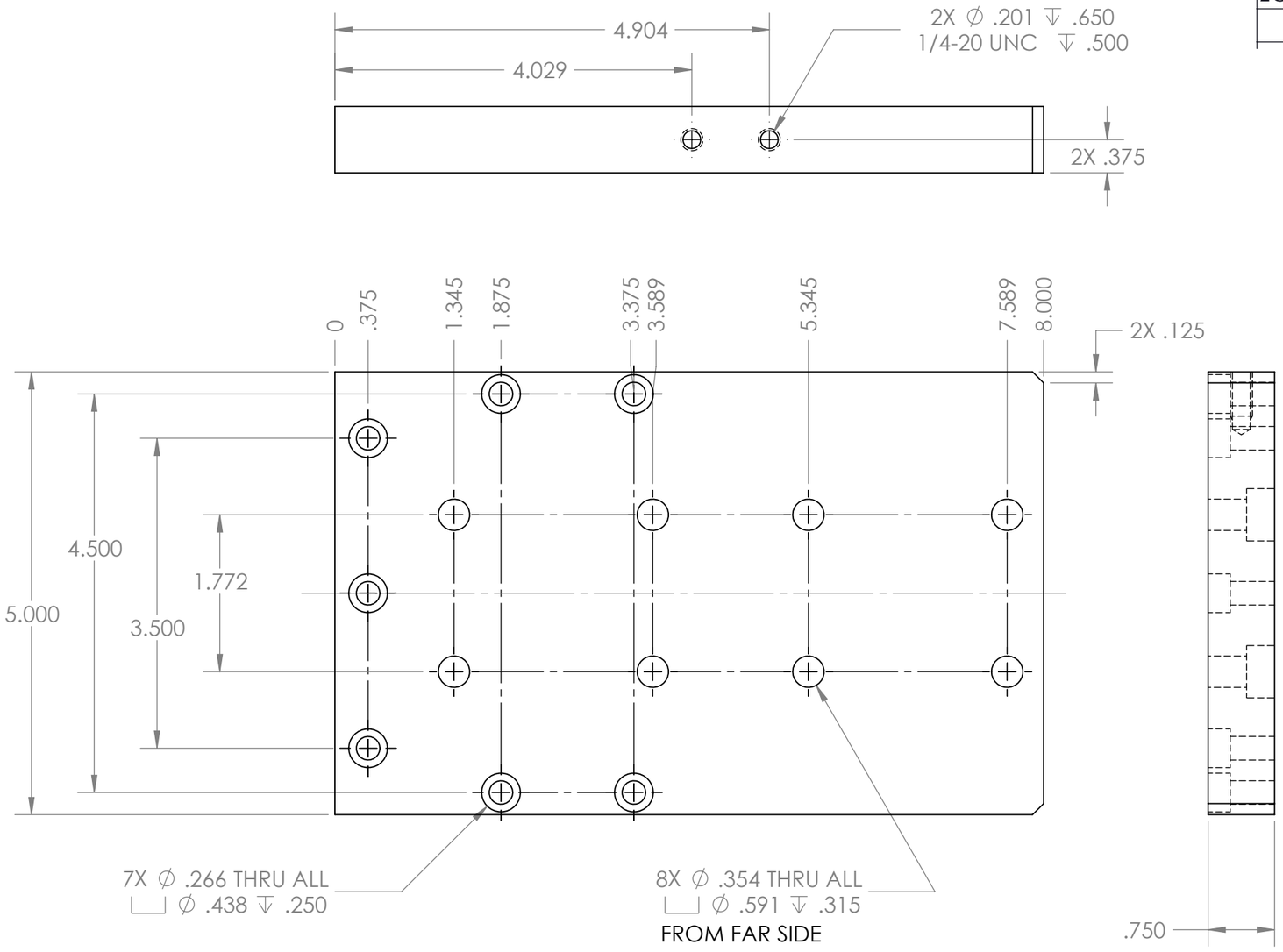

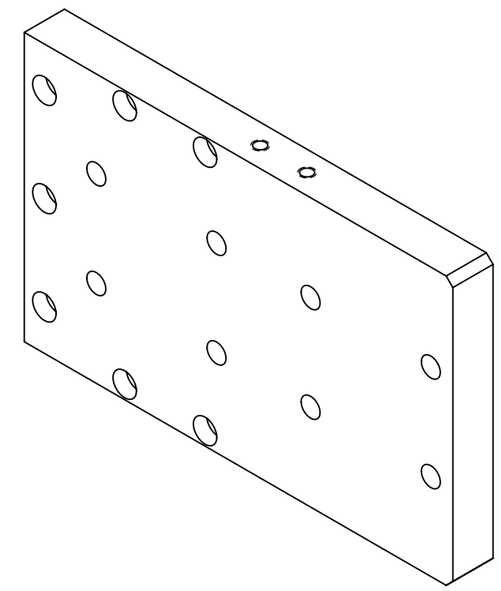

NOTES:
1. MATERIAL: STEEL PLATE, GROUND
2. FINISH: YELLOW ZINC CHROMATE PLATE
3. REMOVE BURRS AND BREAK EDGES

		TOLERANCE EXCEPT AS NOTED DIMENSIONS ARE IN INCHES DECIMAL .XX = ±0.020 .XXX = ±0.005 ANGLE .X = ±1°	ORIGINAL DATE OF DRAWING 3/6/11	OSC POSITION PLATE	GEORGE C. MARSHALL SPACE FLIGHT CENTER NATIONAL AERONAUTICS AND SPACE ADMINISTATION Marshall Space Flight Center, AL 35812	
SEE ENGINEERING RECORDS		MATERIAL 1	DRAFTSMAN BCW / STRESS			
			ENGINEER BCW / MNFG			
			MATERIALS / QA			
			CHECKER			
NEXT ASSY	USED ON	HEAT TREAT	SUBMITTED		DWG SIZE B	081105139
APPLICATION		FINAL FINISH 2	APPROVED	EST WT / SCALE 1:1.5 / CODE 339B2	SHEET 1 OF 1	

REVISIONS				
ZONE	SYM	DESCRIPTION	DATE	APPROVAL

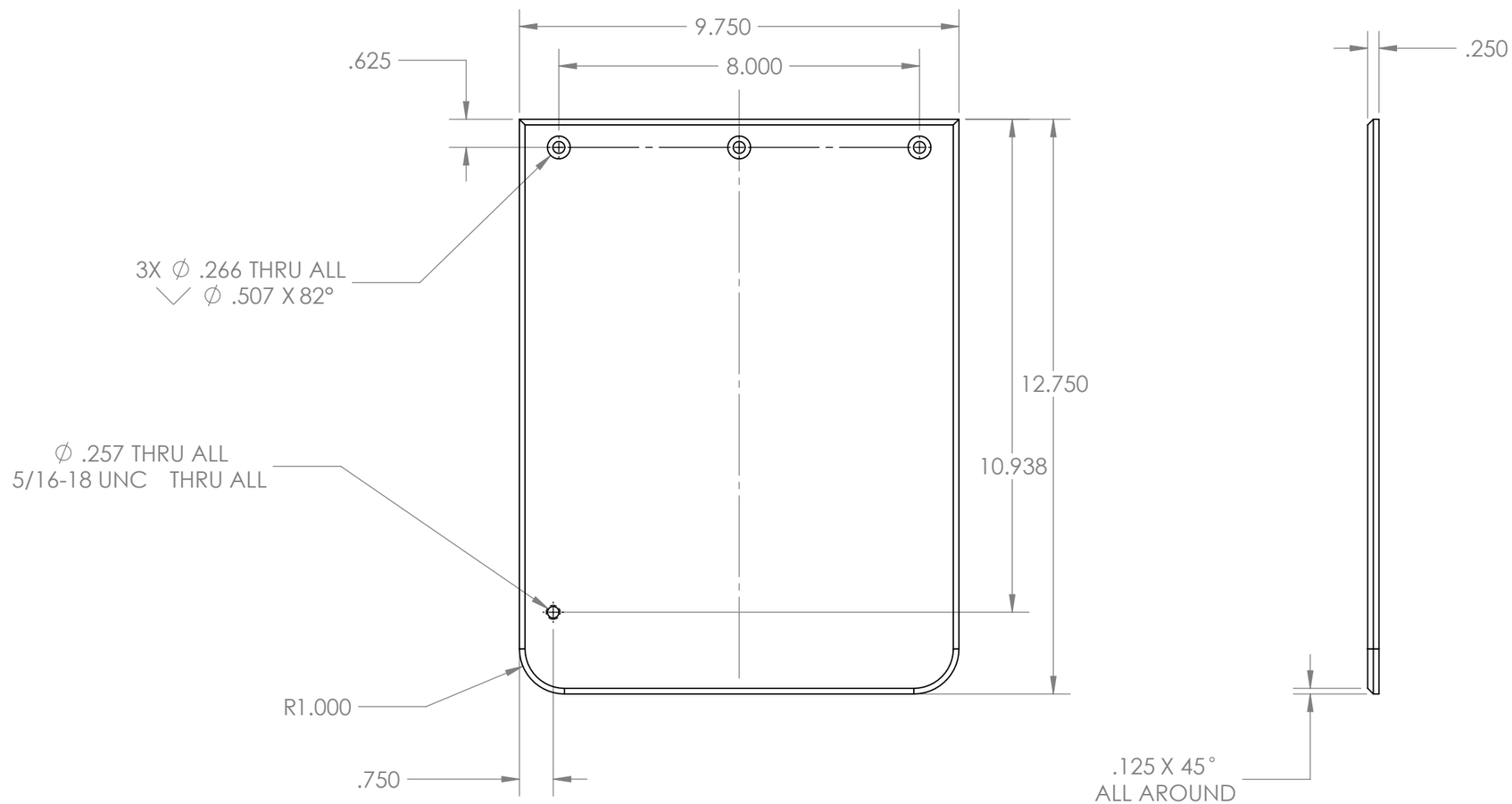

NOTES:
1. MATERIAL: STEEL PLATE, GROUND
2. FINISH: YELLOW ZINC CHROMATE PLATE
3. REMOVE BURRS AND BREAK EDGES

SEE ENGINEERING RECORDS		TOLERANCE EXCEPT AS NOTED DIMENSIONS ARE IN INCHES DECIMAL .XX = ±0.020 .XXX = ±0.005 ANGLE .X= ±1°	ORIGINAL DATE OF DRAWING 3/6/11	OSC FACE PLATE	GEORGE C. MARSHALL SPACE FLIGHT CENTER NATIONAL AERONAUTICS AND SPACE ADMINISTATION Marshall Space Flight Center, AL 35812	
		MATERIAL 1	DRAFTSMAN BCW / STRESS			
			ENGINEER BCW / MNFG			
			MATERIALS / QA			
			CHECKER			
NEXT ASSY	USED ON	HEAT TREAT	SUBMITTED		DWG SIZE B	081105140
APPLICATION		FINAL FINISH 2	APPROVED	EST WT / SCALE 1:3	CODE 339B2	SHEET 1 OF 1

ITEM NO.	PART NUMBER	DESCRIPTION	QTY.
1	081105141 THD ROD .375-24	081105141	1
2	ROD END .375-F-RH	MCMASTER 59915K484	2
3	HEX JAM NUT .375-24		2

REVISIONS				
ZONE	SYM	DESCRIPTION	DATE	APPROVAL

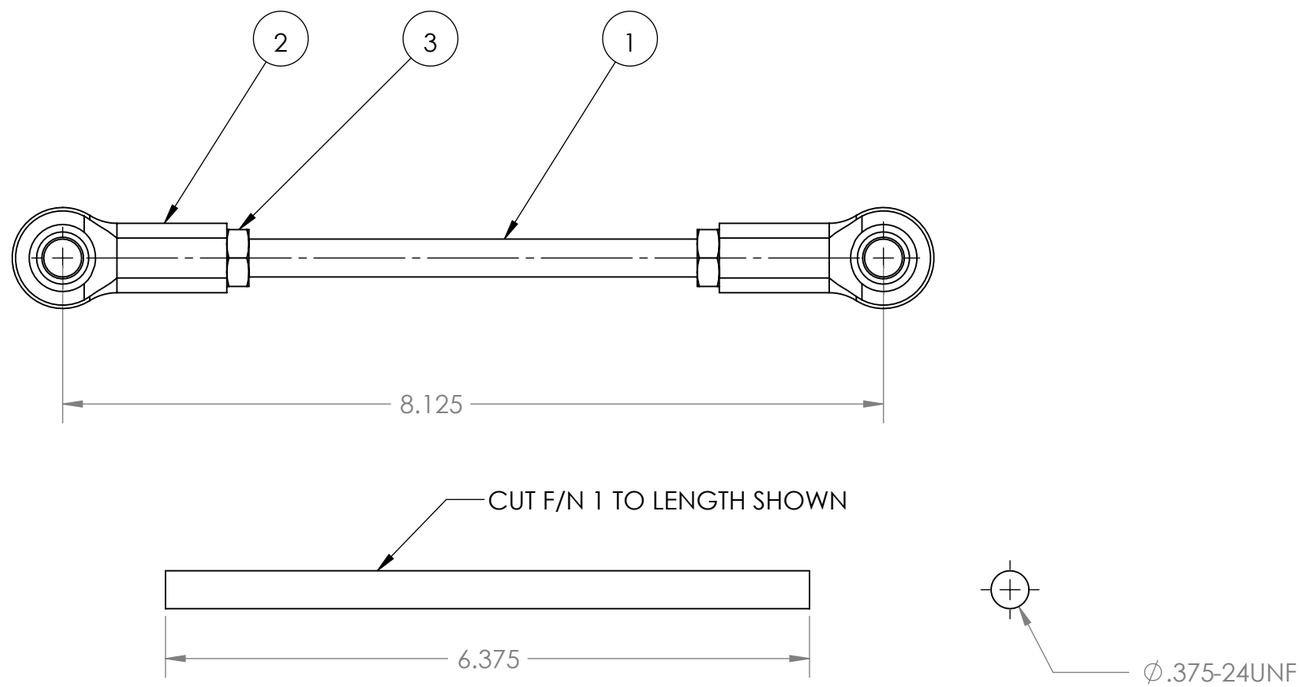

SEE ENGINEERING RECORDS		TOLERANCE EXCEPT AS NOTED DIMENSIONS ARE IN INCHES DECIMAL .XX = ±0.020 .XXX = ±0.005 ANGLE .X= ±1°	ORIGINAL DATE OF DRAWING 3/6/11	LINK ASSY	GEORGE C. MARSHALL SPACE FLIGHT CENTER NATIONAL AERONAUTICS AND SPACE ADMINISTATION Marshall Space Flight Center, AL 35812	
		MATERIAL	DRAFTSMAN BCW / STRESS			
			ENGINEER BCW / MNFG			
			MATERIALS / QA			
			CHECKER			
		HEAT TREAT	SUBMITTED		DWG SIZE B	081105141
NEXT ASSY	USED ON					
APPLICATION		FINAL FINISH	APPROVED	EST WT / SCALE 1:1.5 / CODE 339B2	SHEET 1 OF 1	

REVISIONS				
ZONE	SYM	DESCRIPTION	DATE	APPROVAL

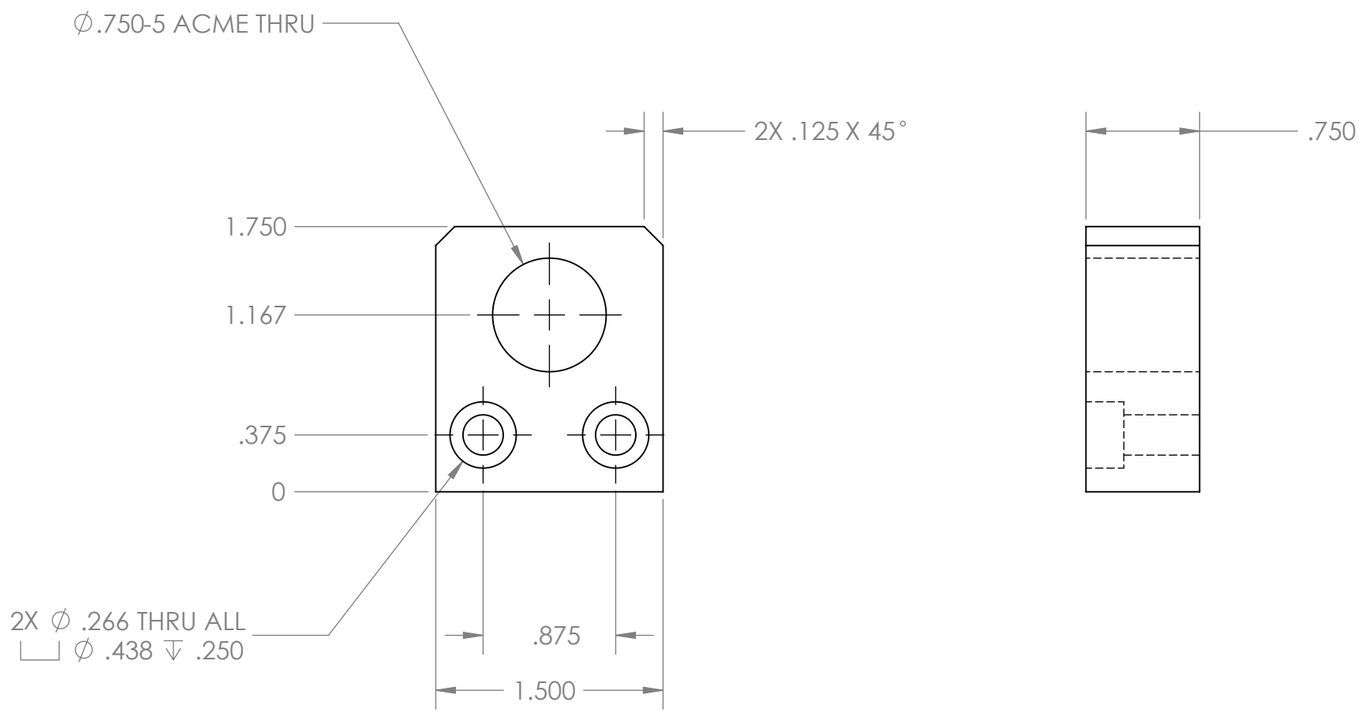

NOTES:
1. MATERIAL: BRASS 360
2. REMOVE BURRS AND BREAK EDGES

		TOLERANCE EXCEPT AS NOTED DIMENSIONS ARE IN INCHES DECIMAL .XX = ±0.020 .XXX = ±0.005 ANGLE .X= ±1°	ORIGINAL DATE OF DRAWING 3/6/11	NUT BLOCK	GEORGE C. MARSHALL SPACE FLIGHT CENTER NATIONAL AERONAUTICS AND SPACE ADMINISTATION Marshall Space Flight Center, AL 35812	
SEE ENGINEERING RECORDS		MATERIAL 1	DRAFTSMAN BCW / STRESS ENGINEER BCW / MNFG MATERIALS / QA CHECKER		DWG SIZE B	081105142
		HEAT TREAT	SUBMITTED			
NEXT ASSY	USED ON	FINAL FINISH	APPROVED	EST WT / SCALE 1:1	CODE 339B2	SHEET 1 OF 1
APPLICATION						

REVISIONS				
ZONE	SYM	DESCRIPTION	DATE	APPROVAL

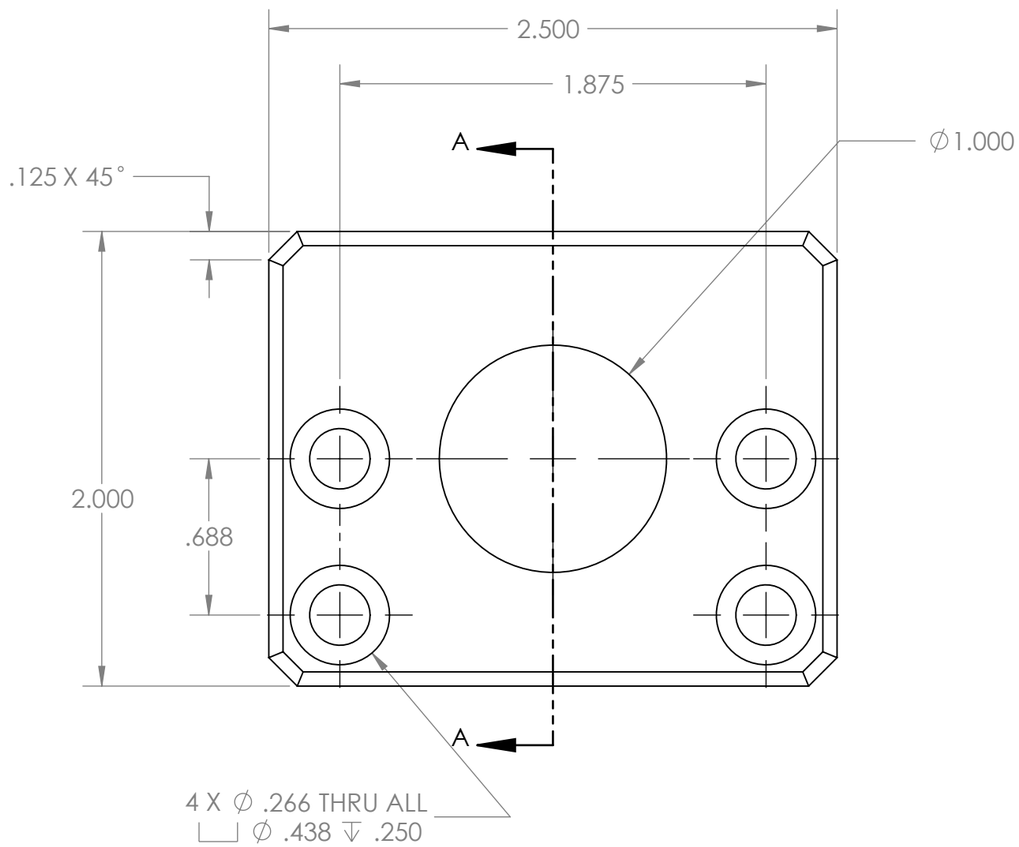

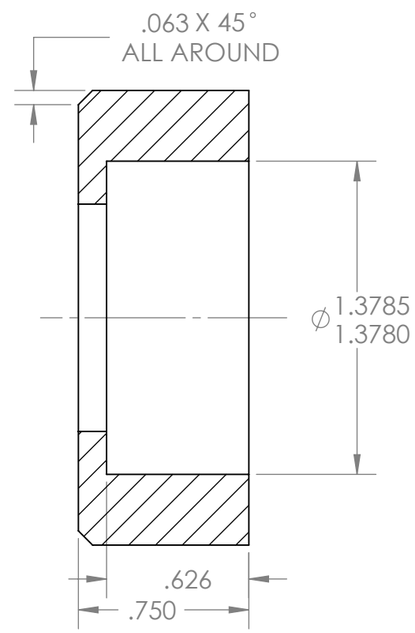

SECTION A-A

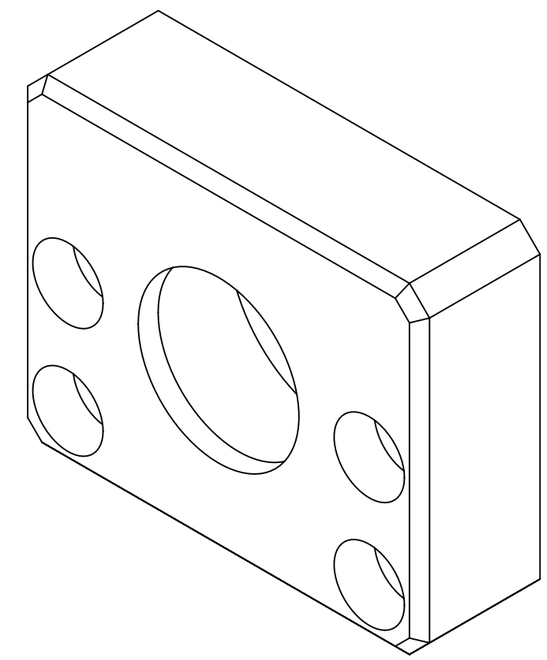

NOTES:
1. MATERIAL: 6061-T6 ALUMINUM
2. FINISH: ANODIZE BLACK
3. REMOVE BURRS AND BREAK EDGES

SEE ENGINEERING RECORDS		TOLERANCE EXCEPT AS NOTED DIMENSIONS ARE IN INCHES DECIMAL .XX = ±0.020 .XXX = ±0.005 ANGLE .X= ±1°	ORIGINAL DATE OF DRAWING 3/6/11	BEARING BLOCK	GEORGE C. MARSHALL SPACE FLIGHT CENTER NATIONAL AERONAUTICS AND SPACE ADMINISTATION Marshall Space Flight Center, AL 35812	
		MATERIAL 1	DRAFTSMAN BCW / STRESS			
			ENGINEER BCW / MNFG			
			MATERIALS / QA			
			CHECKER			
NEXT ASSY	USED ON	HEAT TREAT	SUBMITTED		DWG SIZE B	081105143
APPLICATION		FINAL FINISH 2	APPROVED	EST WT / SCALE 1.5:1	CODE 339B2	SHEET 1 OF 1

REVISIONS				
ZONE	SYM	DESCRIPTION	DATE	APPROVAL

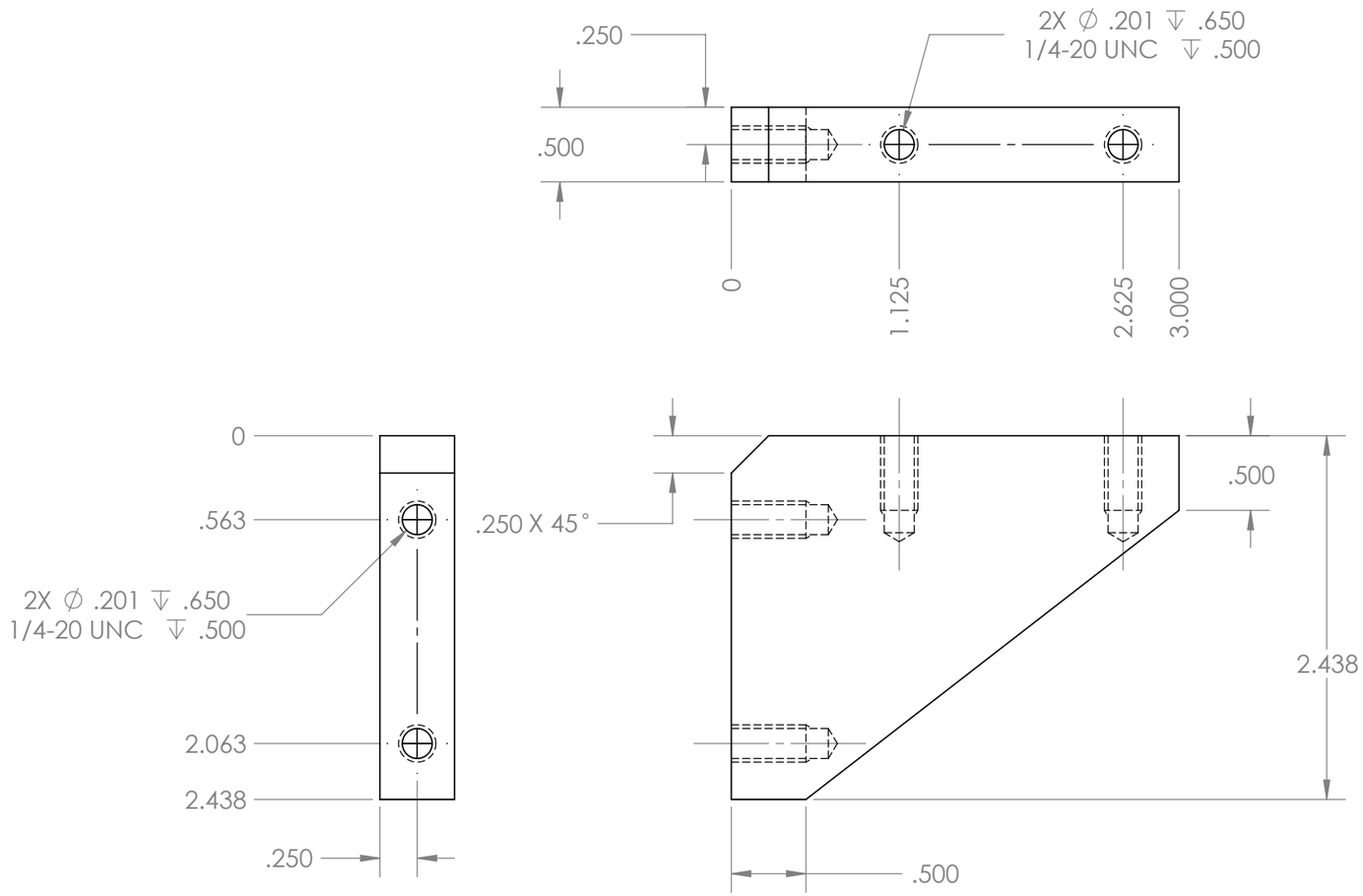

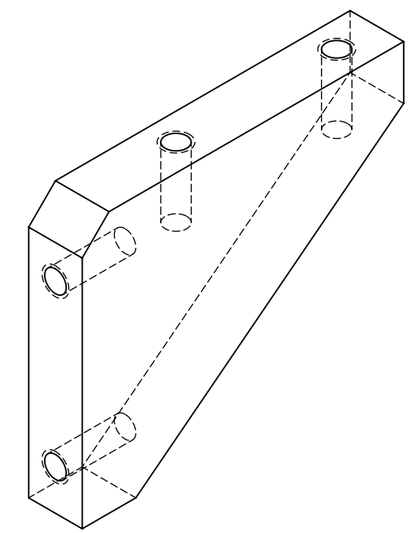

NOTES:
1. MATERIAL: 6061-T6 ALUMINUM
2. FINISH: ANODIZE BLACK
3. REMOVE BURRS AND BREAK EDGES

SEE ENGINEERING RECORDS		TOLERANCE EXCEPT AS NOTED DIMENSIONS ARE IN INCHES DECIMAL .XX = ±0.020 .XXX = ±0.005 ANGLE .X = ±1°	ORIGINAL DATE OF DRAWING 3/6/11	LAP CAR GUSSET	GEORGE C. MARSHALL SPACE FLIGHT CENTER NATIONAL AERONAUTICS AND SPACE ADMINISTATION Marshall Space Flight Center, AL 35812	
		MATERIAL 1	DRAFTSMAN BCW / STRESS			
			ENGINEER BCW / MNFG			
			MATERIALS / QA			
			CHECKER			
NEXT ASSY	USED ON	HEAT TREAT	SUBMITTED		DWG SIZE B	081105144
APPLICATION		FINAL FINISH 2	APPROVED	EST WT / SCALE 1:1 / CODE 339B2	SHEET 1 OF 1	

REVISIONS				
ZONE	SYM	DESCRIPTION	DATE	APPROVAL

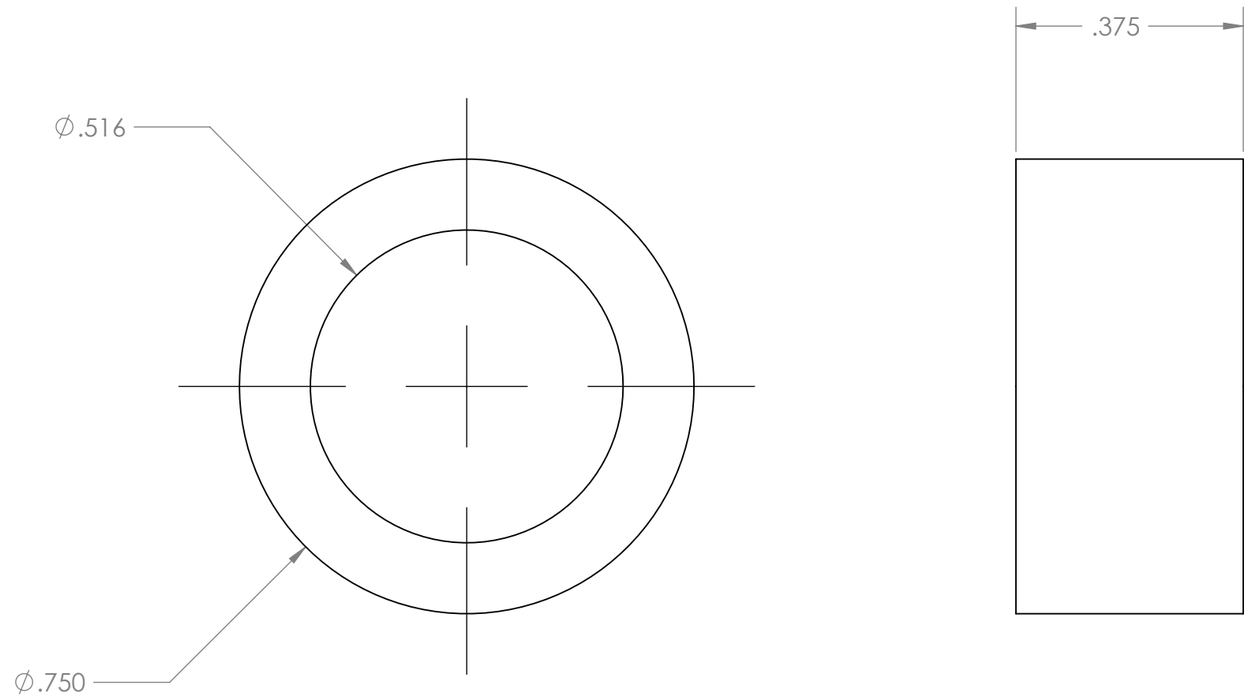

NOTES:
1. MATERIAL: 6061-T6 ALUMINUM
2. FINISH: ANODIZE BLACK
3. REMOVE BURRS AND BREAK EDGES

SEE ENGINEERING RECORDS		TOLERANCE EXCEPT AS NOTED DIMENSIONS ARE IN INCHES DECIMAL .XX = ±0.020 .XXX = ±0.005 ANGLE .X= ±1°	ORIGINAL DATE OF DRAWING 3/6/11	SPACER HANDLE	GEORGE C. MARSHALL SPACE FLIGHT CENTER NATIONAL AERONAUTICS AND SPACE ADMINISTATION Marshall Space Flight Center, AL 35812	
		MATERIAL 1	DRAFTSMAN BCW / STRESS			
			ENGINEER BCW / MNFG			
			MATERIALS / QA			
			CHECKER			
		HEAT TREAT	SUBMITTED		DWG SIZE B	081105145
NEXT ASSY	USED ON					
APPLICATION		FINAL FINISH 2	APPROVED	EST WT / SCALE 4:1	CODE 339B2	SHEET 1 OF 1

REVISIONS				
ZONE	SYM	DESCRIPTION	DATE	APPROVAL

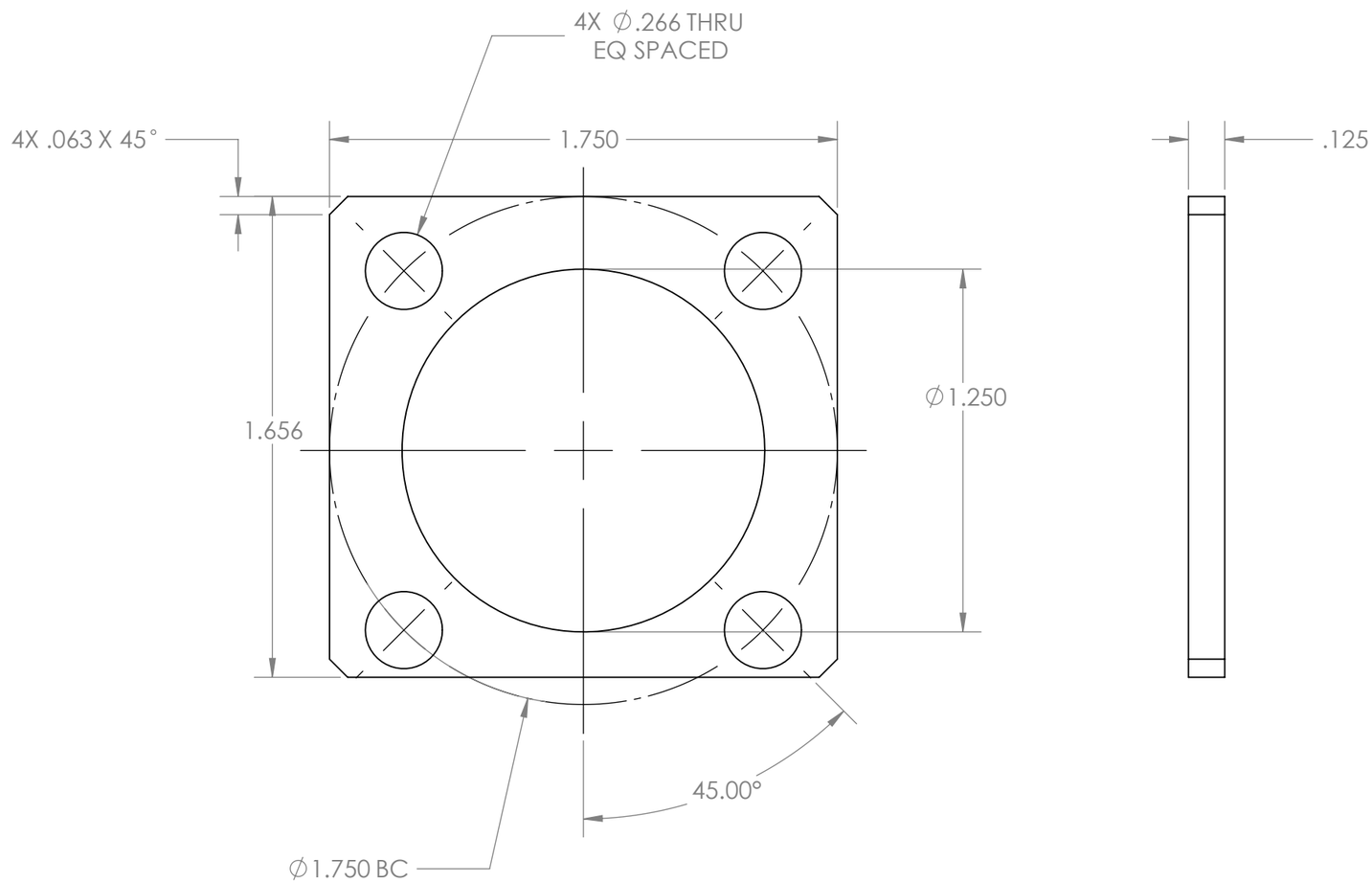

NOTES:
1. MATERIAL: STEEL PLATE
2. FINISH: YELLOW ZINC CHROMATE PLATE
3. REMOVE BURRS AND BREAK EDGES

SEE ENGINEERING RECORDS		TOLERANCE EXCEPT AS NOTED DIMENSIONS ARE IN INCHES DECIMAL .XX = ±0.020 .XXX = ±0.005 ANGLE .X= ±1°	ORIGINAL DATE OF DRAWING 3/6/11	BRG PLATE	GEORGE C. MARSHALL SPACE FLIGHT CENTER NATIONAL AERONAUTICS AND SPACE ADMINISTATION Marshall Space Flight Center, AL 35812
		MATERIAL 1	DRAFTSMAN BCW / STRESS		
			ENGINEER BCW / MNFG		
			MATERIALS / QA		
			CHECKER		DWG SIZE B — 081105146
		HEAT TREAT	SUBMITTED		
NEXT ASSY	USED ON	FINAL FINISH 2	APPROVED	EST WT / SCALE 2:1 / CODE 339B2	SHEET 1 OF 1
APPLICATION					

REVISIONS				
ZONE	SYM	DESCRIPTION	DATE	APPROVAL

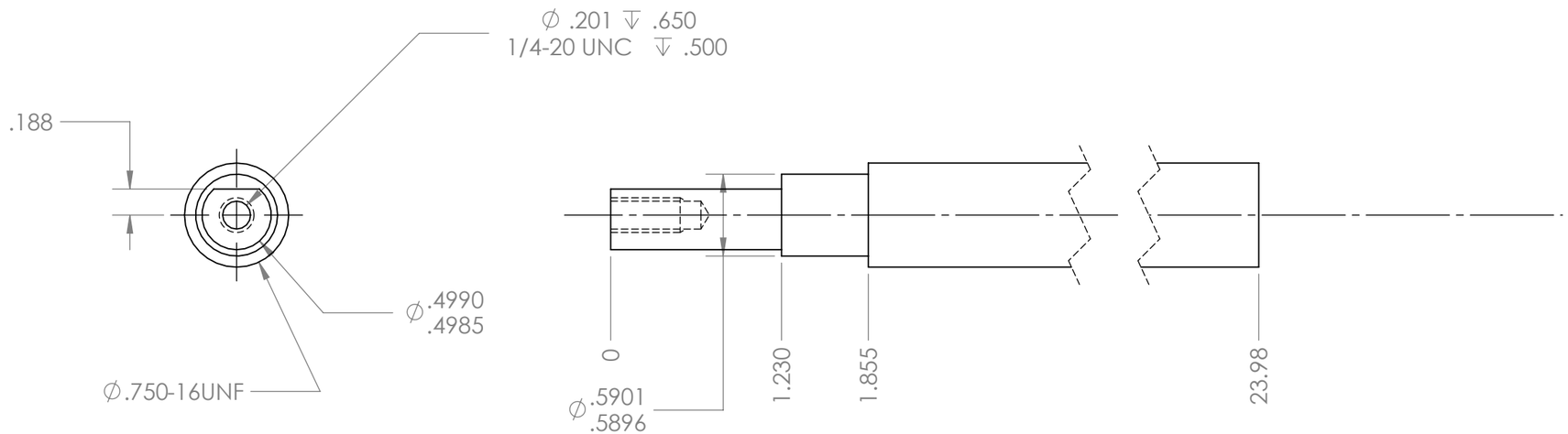

NOTES:
1. MATERIAL: MAKE FROM SS 3/4-16UNF THREADED ROD MCMASTER 91187A765
2. REMOVE BURRS AND BREAK SHARP EDGES

SEE ENGINEERING RECORDS		TOLERANCE EXCEPT AS NOTED DIMENSIONS ARE IN INCHES DECIMAL .XX = ±0.020 .XXX = ±0.005 ANGLE .X= ±1°	ORIGINAL DATE OF DRAWING 3/6/11	TAILSTOCK SCREW	GEORGE C. MARSHALL SPACE FLIGHT CENTER NATIONAL AERONAUTICS AND SPACE ADMINISTATION Marshall Space Flight Center, AL 35812	
		MATERIAL 1	DRAFTSMAN BCW / STRESS			
			ENGINEER BCW / MNFG			
			MATERIALS / QA			
			CHECKER			
NEXT ASSY	USED ON	HEAT TREAT	SUBMITTED		DWG SIZE B	081105147
APPLICATION		FINAL FINISH	APPROVED	EST WT / SCALE 1:1 / CODE 339B2	SHEET 1 OF 1	

REVISIONS				
ZONE	SYM	DESCRIPTION	DATE	APPROVAL

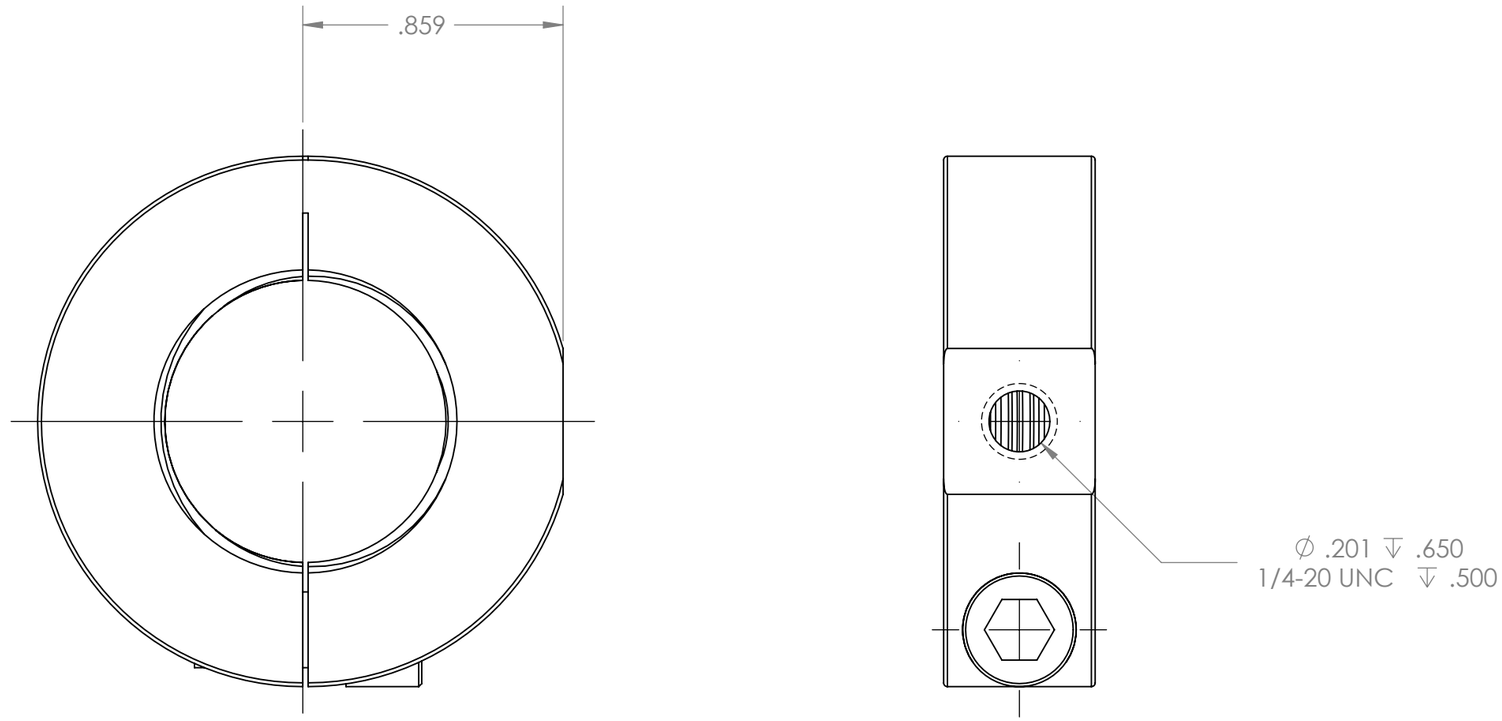

NOTES:
1. MAKE FROM MCMASTER 6438K31 LOCKING THREADED COLLAR
2. REMOVE BURRS AND BREAK EDGES

SEE ENGINEERING RECORDS		TOLERANCE EXCEPT AS NOTED DIMENSIONS ARE IN INCHES DECIMAL .XX = ±0.020 .XXX = ±0.005 ANGLE .X= ± 1°	ORIGINAL DATE OF DRAWING 3/6/11	MOD COLLAR 1-14	GEORGE C. MARSHALL SPACE FLIGHT CENTER NATIONAL AERONAUTICS AND SPACE ADMINISTATION Marshall Space Flight Center, AL 35812	
		MATERIAL 1	DRAFTSMAN BCW / STRESS			
			ENGINEER BCW / MNFG			
			MATERIALS / QA			
			CHECKER			
NEXT ASSY	USED ON	HEAT TREAT	SUBMITTED		DWG SIZE B	081105148
APPLICATION		FINAL FINISH	APPROVED	EST WT / SCALE 2:1 / CODE 339B2	SHEET 1 OF 1	

REVISIONS				
ZONE	SYM	DESCRIPTION	DATE	APPROVAL

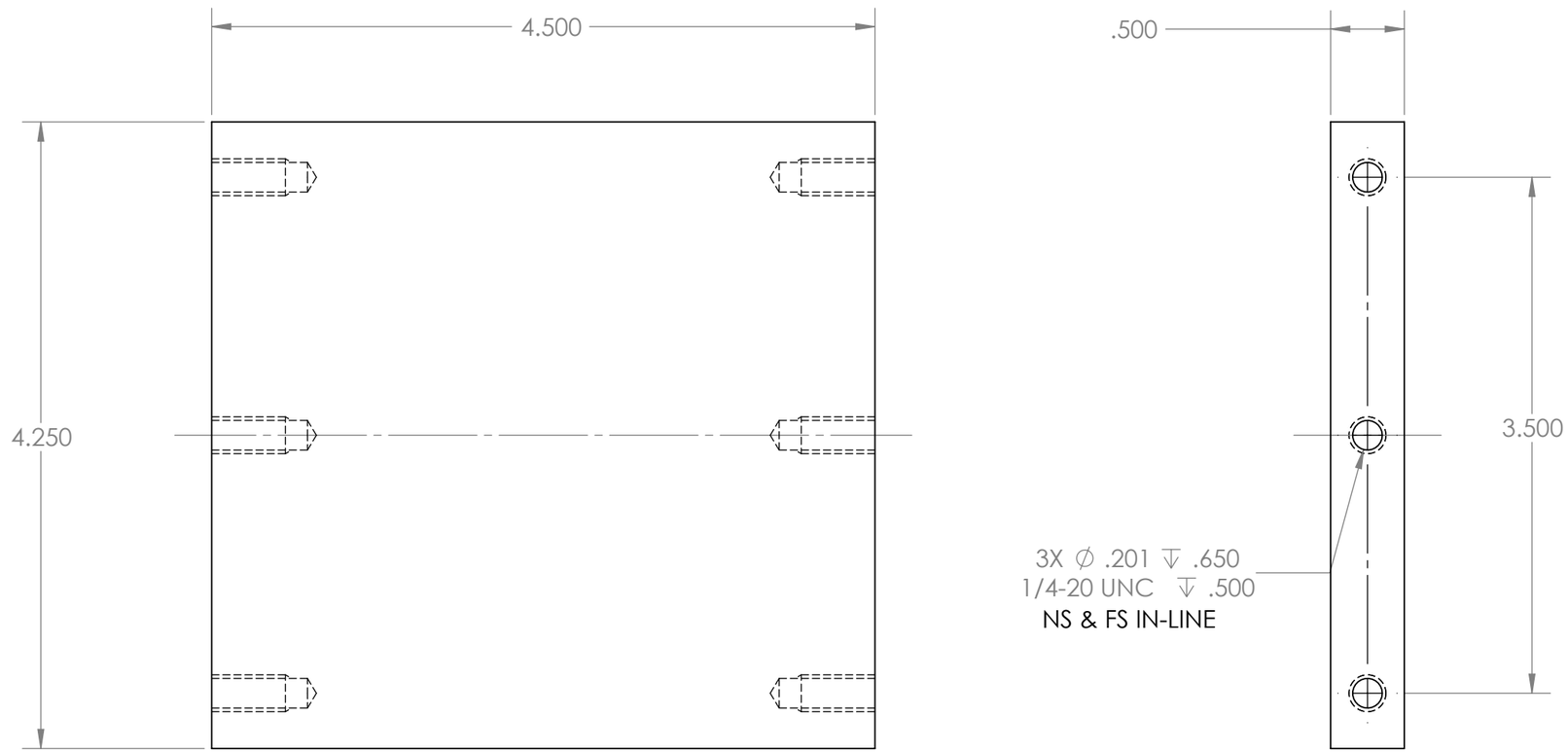

NOTES:
1. MATERIAL: STEEL PLATE, GROUND
2. FINISH: YELLOW ZINC CHROMATE PLATE
3. REMOVE BURRS AND BREAK EDGES

SEE ENGINEERING RECORDS		TOLERANCE EXCEPT AS NOTED DIMENSIONS ARE IN INCHES DECIMAL .XX = ±0.020 .XXX = ±0.005 ANGLE .X= ±1°	ORIGINAL DATE OF DRAWING 3/7/11	CROSS PLATE	GEORGE C. MARSHALL SPACE FLIGHT CENTER NATIONAL AERONAUTICS AND SPACE ADMINISTATION Marshall Space Flight Center, AL 35812	
		MATERIAL 1	DRAFTSMAN BCW / STRESS			
			ENGINEER BCW / MNFG			
			MATERIALS / QA			
			CHECKER			
		HEAT TREAT	SUBMITTED		DWG SIZE B	081105149
NEXT ASSY	USED ON	FINAL FINISH 2	APPROVED	EST WT / SCALE 1:1	CODE 339B2	SHEET 1 OF 1
APPLICATION						

REVISIONS				
ZONE	SYM	DESCRIPTION	DATE	APPROVAL

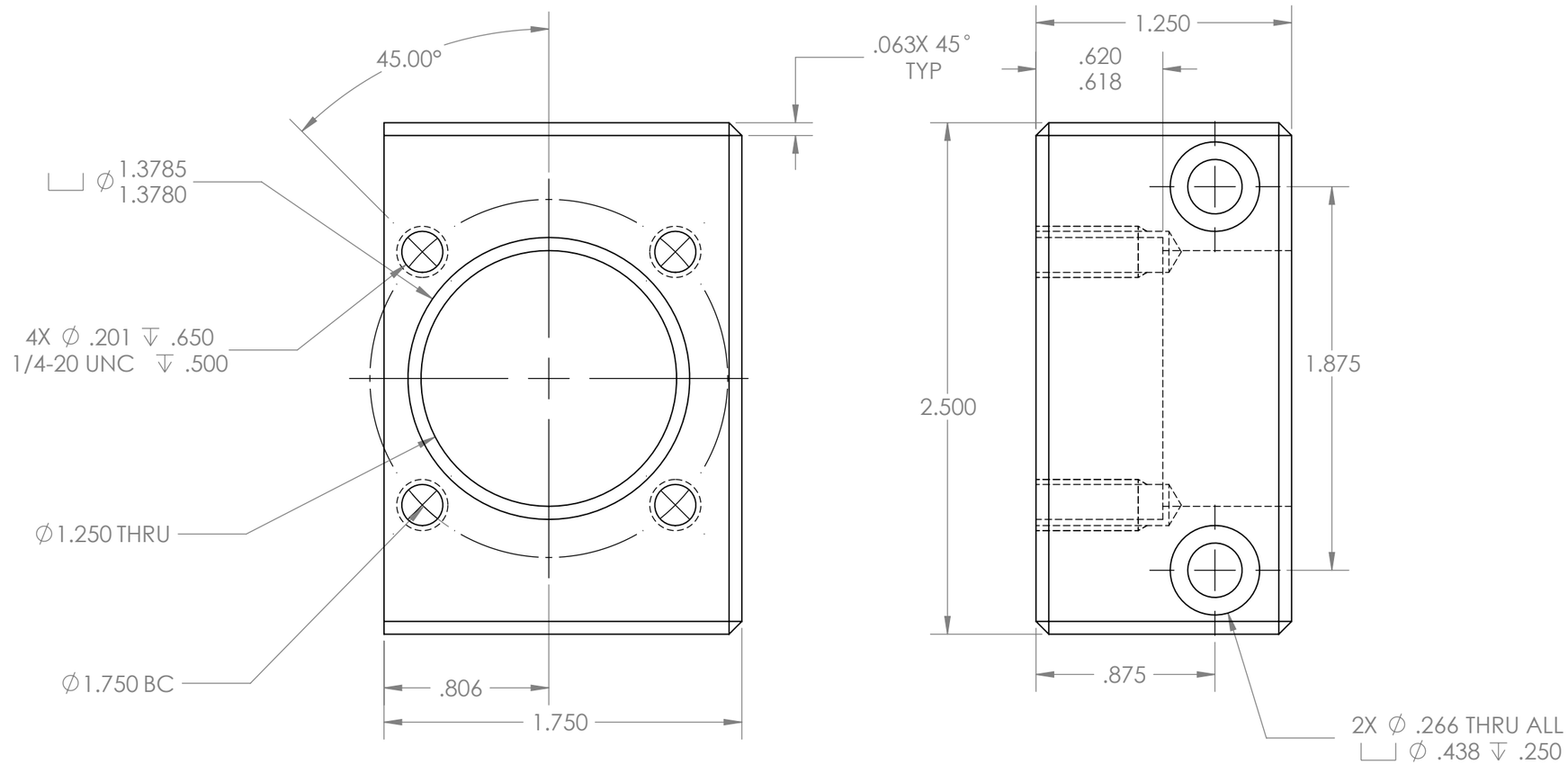

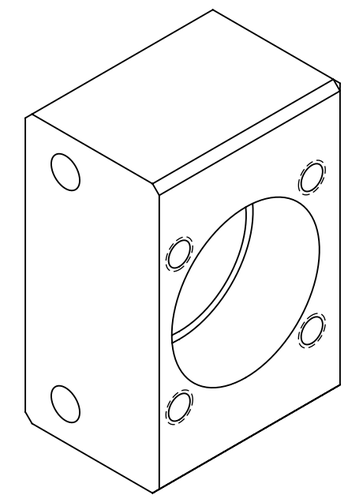

NOTES:
1. MATERIAL: STEEL PLATE, GROUND
2. FINISH: YELLOW ZINC CHROMATE PLATE
3. REMOVE BURRS AND BREAK EDGES

		TOLERANCE EXCEPT AS NOTED DIMENSIONS ARE IN INCHES DECIMAL .XX = ±0.020 .XXX = ±0.005 ANGLE .X= ±1°	ORIGINAL DATE OF DRAWING 3/7/11	BEARING BLOCK	GEORGE C. MARSHALL SPACE FLIGHT CENTER NATIONAL AERONAUTICS AND SPACE ADMINISTATION Marshall Space Flight Center, AL 35812	
SEE ENGINEERING RECORDS		MATERIAL 1	DRAFTSMAN BCW / STRESS			
			ENGINEER BCW / MNFG			
			MATERIALS / QA			
			CHECKER			
NEXT ASSY	USED ON	HEAT TREAT	SUBMITTED		DWG SIZE B	081105150
APPLICATION		FINAL FINISH 2	APPROVED	EST WT / SCALE 1.5:1 / CODE 339B2	SHEET 1 OF 1	

REVISIONS				
ZONE	SYM	DESCRIPTION	DATE	APPROVAL

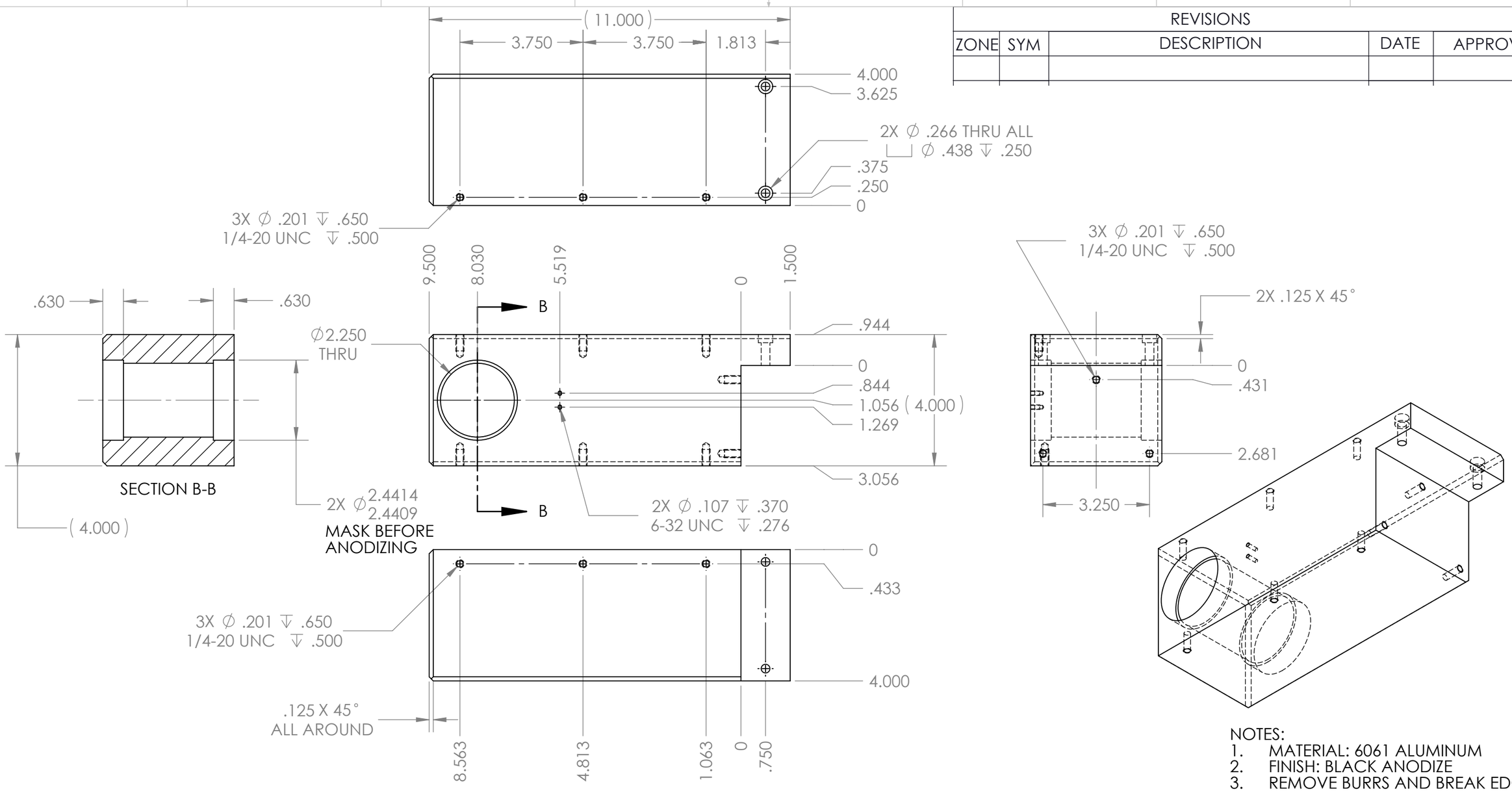

NOTES:
1. MATERIAL: 6061 ALUMINUM
2. FINISH: BLACK ANODIZE
3. REMOVE BURRS AND BREAK EDGES

SEE ENGINEERING RECORDS		TOLERANCE EXCEPT AS NOTED DIMENSIONS ARE IN INCHES DECIMAL .XX = ±0.020 .XXX = ±0.005 ANGLE .X = ±1°	ORIGINAL DATE OF DRAWING 3/7/11	LATHE HEADSTOCK	GEORGE C. MARSHALL SPACE FLIGHT CENTER NATIONAL AERONAUTICS AND SPACE ADMINISTATION Marshall Space Flight Center, AL 35812
		MATERIAL 1	DRAFTSMAN BCW / STRESS		
			ENGINEER BCW / MNFG		
			MATERIALS / QA		
			CHECKER		DWG SIZE B — 081105151
		HEAT TREAT	SUBMITTED		
NEXT ASSY	USED ON				
APPLICATION		FINAL FINISH 2	APPROVED	EST WT / SCALE 1:3 / CODE 339B2	SHEET 1 OF 1

REVISIONS				
ZONE	SYM	DESCRIPTION	DATE	APPROVAL

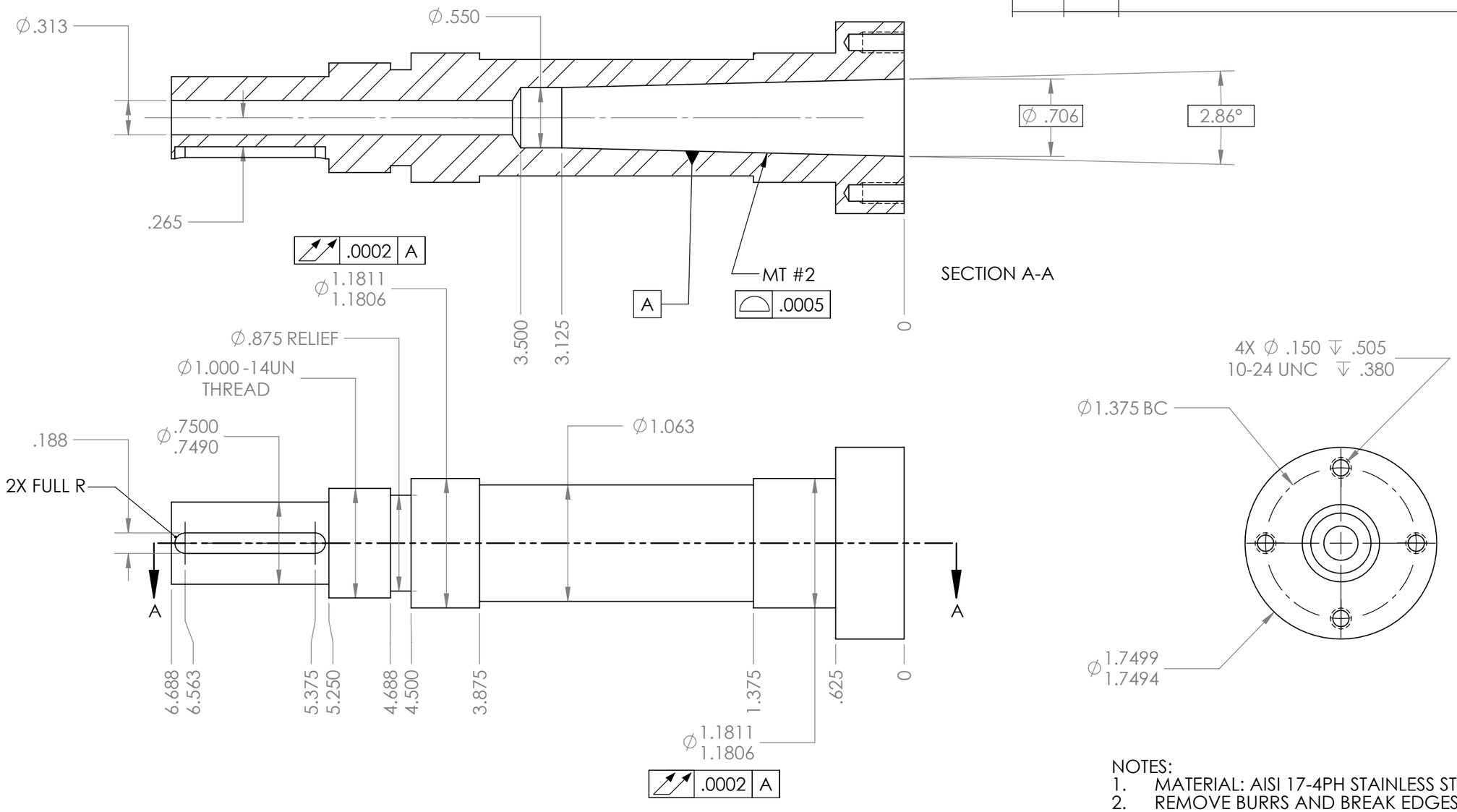

NOTES:
1. MATERIAL: AISI 17-4PH STAINLESS STEEL H 1100 CONDITION
2. REMOVE BURRS AND BREAK EDGES

SEE ENGINEERING RECORDS		TOLERANCE EXCEPT AS NOTED DIMENSIONS ARE IN INCHES DECIMAL .XX = ±0.020 .XXX = ±0.005 ANGLE .X= ±1°	ORIGINAL DATE OF DRAWING 3/7/11	LATHE SPINDLE	GEORGE C. MARSHALL SPACE FLIGHT CENTER NATIONAL AERONAUTICS AND SPACE ADMINISTATION Marshall Space Flight Center, AL 35812
		MATERIAL 1	DRAFTSMAN BCW / STRESS		
			ENGINEER BCW / MNFG		
			MATERIALS / QA		
			CHECKER		DWG SIZE B — 081105152
		HEAT TREAT	SUBMITTED		
NEXT ASSY	USED ON				
APPLICATION		FINAL FINISH	APPROVED	EST WT / SCALE 1:1 / CODE 339B2	SHEET 1 OF 1

REVISIONS				
ZONE	SYM	DESCRIPTION	DATE	APPROVAL

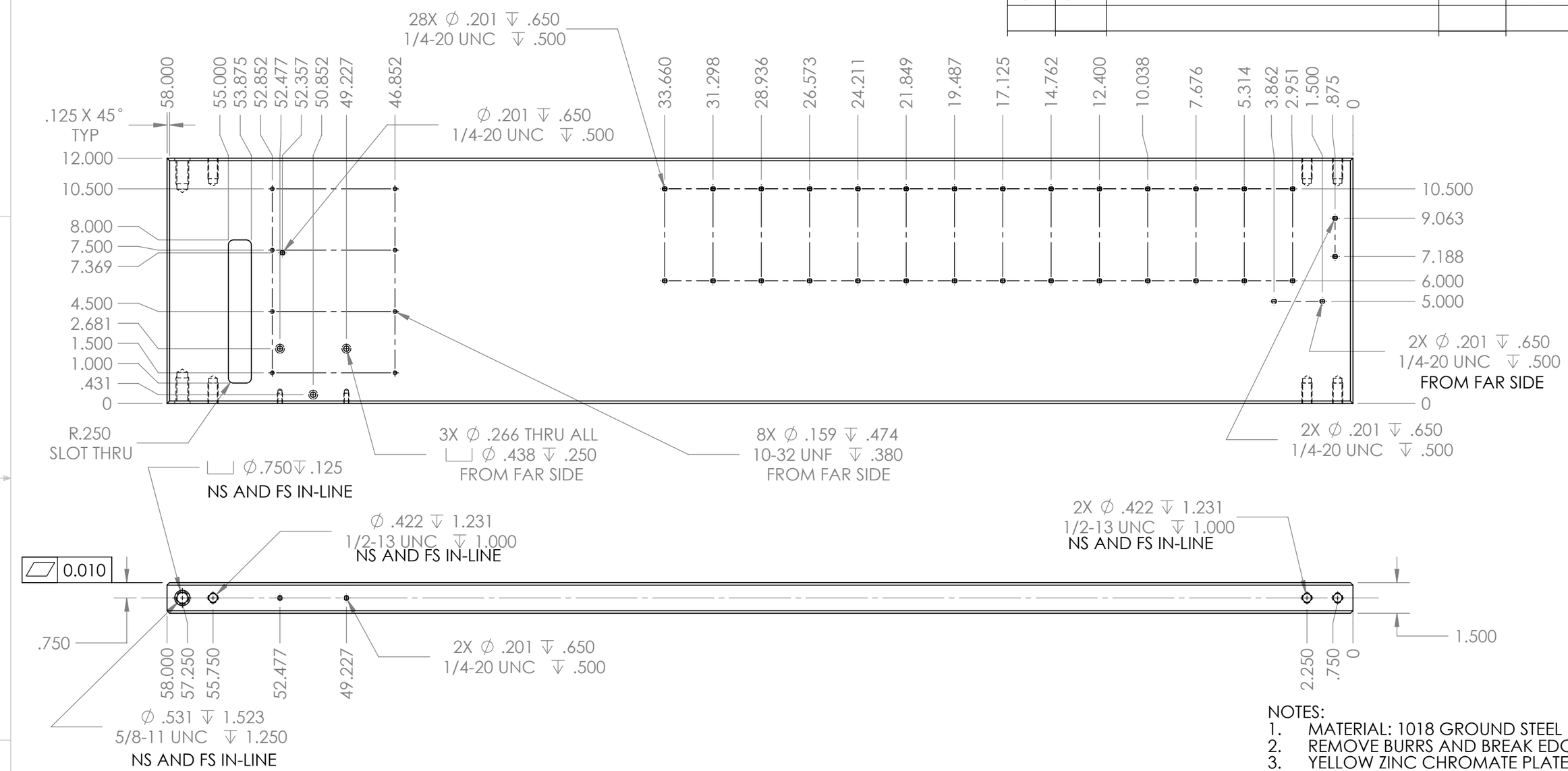

NOTES:
1. MATERIAL: 1018 GROUND STEEL PLATE
2. REMOVE BURRS AND BREAK EDGES
3. YELLOW ZINC CHROMATE PLATE

SEE ENGINEERING RECORDS		TOLERANCE EXCEPT AS NOTED DIMENSIONS ARE IN INCHES DECIMAL .XX = ±0.020 .XXX = ±0.005 ANGLE .X= ±1°	ORIGINAL DATE OF DRAWING 3/7/11	LATHE BASE PLATE	GEORGE C. MARSHALL SPACE FLIGHT CENTER NATIONAL AERONAUTICS AND SPACE ADMINISTATION Marshall Space Flight Center, AL 35812
		MATERIAL 1	DRAFTSMAN BCW / STRESS		
			ENGINEER BCW / MNFG		
			MATERIALS / QA		
			CHECKER		DWG SIZE B — 081105153
NEXT ASSY	USED ON	HEAT TREAT	SUBMITTED		
APPLICATION		FINAL FINISH 2	APPROVED	EST WT / SCALE 1:5 / CODE 339B2	SHEET 1 OF 1