REVISIONS		
REV	ECN	DATE
B	40569	5/27/2009

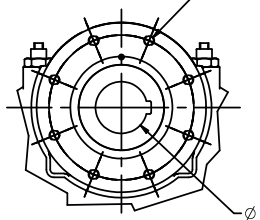

VIEW A-A
MOUNTING SURFACE

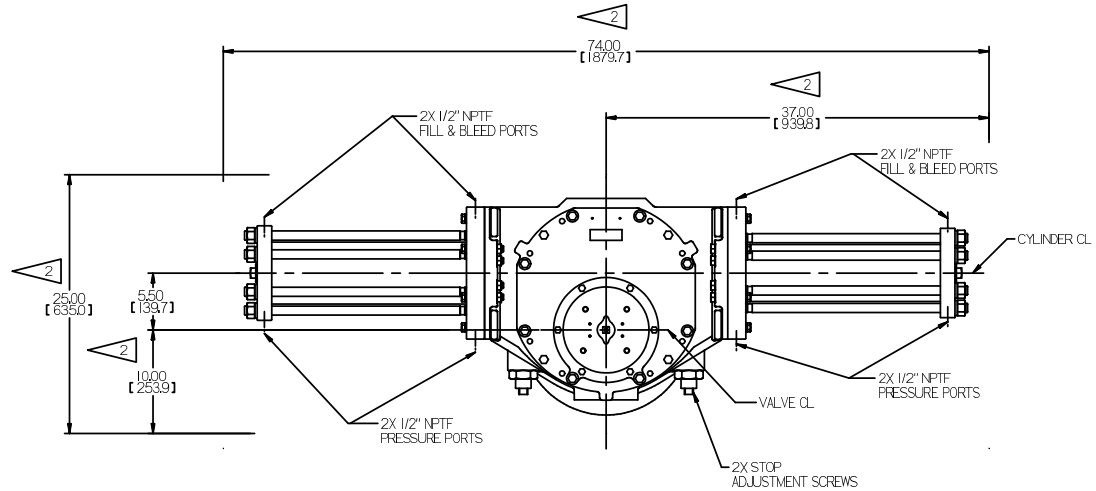

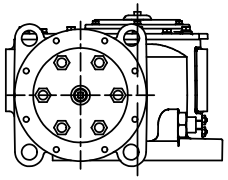

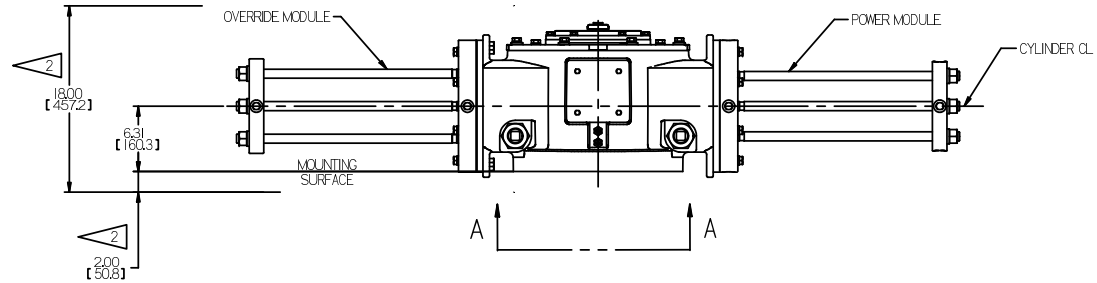

NOTES:

1. ACTUATOR SHOWN ROTATED TO THE FULL CLOCKWISE POSITION.

2 MINIMUM CLEARANCE DIMENSIONS FOR ACTUATOR / ACCESSORY ADJUSTMENT, PIPING & MAINTENANCE SHOWN AS SCHEMATIC ONLY.

3. ALL APPROXIMATED DIMENSIONS ARE IN INCHES. DIMENSIONS SHOWN IN BRACKET ARE IN MILLIMETERS.

4. WEIGHT OF ACTUATOR (PLUS ACCY'S IF APPLICABLE) APPROX 904 LBS / 410.1 KGS.

5. ADDITIONAL DIMENSIONAL INFORMATION SHOWN ON DIM DATA DWG NO. 153648.

DRAWN BY: ARCHANA	DATE 5/18/2009	TITLE: BETTIS BASE II G5004.5-H-S
CHECK BY: GIRISH D	5/19/2009	

THIS DOCUMENT AND THE DATA DISCLOSED HEREIN OR HEREWITH IS NOT TO BE REPRODUCED, USED OR DISCLOSED IN WHOLE OR IN PART TO ANYONE WITHOUT THE PERMISSION OF EMERSON.

SALES ORDER: 082550B

CERTIFIED DRAWING
PURCHASE ORDER SP22285467

THIRD ANGLE PROJECTION

EMERSON. Process Management

PART NO. 152872

SCALE	DWG. SIZE	
1:6	D	B
SHEET 1 OF 1		REV