NASA TECHNICAL STANDARD	**NASA-STD 8739.3 with Change 3**
National Aeronautics and Space Administration Washington, DC 20546	Approved: 1997-12-15 Revalidation Date: 2008-06-06 Expiration Date: 2013-06-06

SOLDERED ELECTRICAL CONNECTIONS

Measurement System Identification:
Metric (English)

APPROVED FOR PUBLIC RELEASE – DISTRIBUTION IS UNLIMITED

Provided by IHS
No reproduction or networking permitted without license from IHS

Licensee=NASA Technical Standards 4/9972545004, User=Garcia, Jaime
Not for Resale, 11/08/2010 15:56:56 MST

This page intentionally left blank.

Provided by IHS
No reproduction or networking permitted without license from IHS

Licensee=NASA Technical Standards 4/9972545004, User=Garcia, Jaime
Not for Resale, 11/08/2010 15:56:56 MST

DOCUMENT HISTORY LOG

Status	Document Revision	Approval Date	Description
Baseline		1997-12-15	Initial Release
	Change 1	2000-12-08	Typographical corrections to the headers on pages A10 and A12 (Changed Acceptable to Unacceptable) ***(WBHIII)***
	Change 2	2001-01-18	Replaced erroneous figure 14 on page A-6 which was a duplicate of figure 8) with the correct figure ***(WBHIII)***
	Change 3	2008-06-06	Update references, add 'requirement' tags, and revalidate ***(JWL4)***

Provided by IHS
No reproduction or networking permitted without license from IHS

Licensee=NASA Technical Standards 4/9972545004, User=Garcia, Jaime
Not for Resale, 11/08/2010 15:56:56 MST

This page intentionally left blank.

Provided by IHS
No reproduction or networking permitted without license from IHS

Licensee=NASA Technical Standards 4/9972545004, User=Garcia, Jaime
Not for Resale, 11/08/2010 15:56:56 MST

FOREWORD

This Standard provides a baseline for NASA project offices to use when preparing or evaluating process procedures for the manufacture of space flight hardware or mission critical ground support equipment.

This Standard:

a. Prescribes NASA's process and end-item requirements for reliable soldered electrical connections.

b. Establishes responsibilities for training personnel.

c. Establishes responsibilities for documenting process procedures including supplier innovations, special processes, and changes in technology.

For the purpose of this Standard, the term supplier is defined as in-house NASA, NASA contractors, and subtier contractors.

NASA Installations shall:

a. Review and invoke the provisions of this Standard for procurements involving hand soldering of space flight hardware and mission critical ground support equipment.

b. Review and invoke the provisions of this Standard for in-house operations involving hand soldering of space flight hardware and mission critical ground support equipment.

c. Tailor specific provisions of this Standard to address program or unique contractual or mission requirements.

d. Assure that NASA suppliers invoke this Standard on subcontractors, purchase orders, and on subtier suppliers where applicable.

e. Furnish copies of this Standard in the quantities required to NASA suppliers and subtier suppliers.

Questions concerning the application of this Standard to specific procurements shall be referred to the procuring NASA installation, or its designated representative.

This Standard cancels NHB 5300.4(3A-2), "Requirements for Soldered Electrical Connections."

This Standard shall not be rewritten or reissued in any other form not approved by NASA.

Other processes not covered by this Standard may be required. The design, materials, and processes shall be defined in engineering documentation.

--`,,`,`,`,`,``,,,`,`,`,``,,`,`,``,,`,`,,`---

Provided by IHS
No reproduction or networking permitted without license from IHS

Licensee=NASA Technical Standards 4/9972545004, User=Garcia, Jaime
Not for Resale, 11/08/2010 15:56:56 MST

Comments and suggestions for improving this Standard may be submitted using the form "NASA Technical Standard Improvement Proposal." A copy of the form is included in Appendix B.

This version supersedes: *NASA-STD 8739.3 with Change 2 dated January 8, 2001*

/s/
Frederick D. Gregory
Associate Administrator for
Safety and Mission Assurance

NASA-STD 8739.3 Change 3 Approved by: B O'Connor *on* 6 June 2008

Provided by IHS
No reproduction or networking permitted without license from IHS
Licensee=NASA Technical Standards 4/9972545004, User=Garcia, Jaime
Not for Resale, 11/08/2010 15:56:56 MST

NASA Technical Standards for Space Flight and Mission Critical Ground Support Hardware

NASA Technical Standards can be found on the World Wide Web at URL address http://standards.nasa.gov/public/public_query_NASA_stds.taf.

Title	Number
Workmanship Standard for Staking and Conformal Coating of Printed Wiring Boards and Electronic Assemblies	NASA-STD 8739.1A
Workmanship Standard for Surface Mount Technology	NASA-STD 8739.2 with Change 1
Soldered Electrical Connections	NASA-STD-8739.3 with Change 3
Crimping, Interconnecting Cables, Harnesses, and Wiring	NASA-STD-8739.4 with Change 3
Fiber Optic Terminations, Cable Assemblies, and Installation	NASA-STD-8739.5 with Change 1

NOTE: ***NASA-STD-8739.7, Standard for Electrostatic Discharge Control (Excluding Electrically Initiated Explosive Devices), was referenced in earlier versions of this document as a NASA Technical Standard for Flight Hardware Workmanship. It has been replaced with ANSI/ESD S20.20, Protection of Electrical and Electronic Parts, Assemblies and Equipment (Excluding Electrically Initiated Explosive Devices)***

Provided by IHS
No reproduction or networking permitted without license from IHS

Licensee=NASA Technical Standards 4/9972545004, User=Garcia, Jaime
Not for Resale, 11/08/2010 15:56:56 MST

TABLE OF CONTENTS

1. SCOPE 12
1.1 Purpose 12
1.2 Applicability 12

2. APPLICABLE DOCUMENTS 13
2.1 Applicable Specifications 13
2.2 Other Documents: 13

3. DEFINITIONS AND ACRONYMS 14
3.1 Definitions 14
3.2 Acronyms 19

4. GENERAL 22
4.1 General 22
4.2 Approval of Departures From This Standard 22
4.3 Reliable Soldered Connections 23
4.4 Documentation 23
4.5 Rework And Repair 23

5. TRAINING AND CERTIFICATION PROGRAM 24
5.1 General 24
5.2 Vision Requirements 24
5.3 Certification Levels 25
5.4 Training Program Requirements 25
5.5 Documentation 26
5.6 Maintenance of Certification Status 26
5.7 Training Resources 27

6. FACILITIES, EQUIPMENT, MATERIALS, AND PARTS 28
6.1 Facility Cleanliness 28
6.2 Environmental Conditions 28
6.3 Electrostatic Discharge Requirements 29
6.4 Tool and Equipment Control 29
6.5 Soldering Tools and Equipment 30
6.6 Conductor Preparation Tools 31
6.7 Thermal Shunts 32

--`,,`,`,`,`,``,,,`,`,``,,`,`,``,,`,`,`,,`---

Provided by IHS
No reproduction or networking permitted without license from IHS

Licensee=NASA Technical Standards 4/9972545004, User=Garcia, Jaime
Not for Resale, 11/08/2010 15:56:56 MST

6.8 Inspection Optics 32
6.9 In-Process Storage and Handling 32
6.10 Material Solderability 33
6.11 Solder 33
6.12 Liquid Flux 33
6.13 Solvents and Cleaners 33
6.14 Personnel Protection 35

7. PREPARATION FOR SOLDERING 36
7.1 Preparation of Soldering Tools 36
7.2 Preparation of Conductors 36
7.3 Preparation of Printed Wiring Boards, Terminals, and Solder Cups 37

8. PARTS MOUNTING 39
8.1 General 39
8.2 Mounting of Terminals 41
8.3 Mounting of Parts to Terminals 43
8.4 Mounting of Parts to PWB'S 44
8.5 Boards Lead Terminations, Printed Wiring 47

9. ATTACHMENT OF CONDUCTORS TO TERMINALS 53
9.1 General 53
9.2 Turret and Straight Pin Terminals 54
9.3 Bifurcated Terminals 56
9.4 Hook Terminals 59
9.5 Pierced Terminals 60
9.6 Solder Cups (Connector Type) 60
9.7 Solder Cups (Swaged Type) 61
9.8 Insulation Sleeving Application 61

10. SOLDERING TO TERMINALS 62
10.1 General 62
10.2 Solder Application 62
10.3 High Voltage Terminations 62
10.4 Solder Cleaning 63

11. HAND SOLDERING OF PRINTED WIRING ASSEMBLIES 64
11.1 General 64
11.2 Solder Application 64
11.3 Solder Cleaning 65

Provided by IHS
No reproduction or networking permitted without license from IHS
Licensee=NASA Technical Standards 4/9972545004, User=Garcia, Jaime
Not for Resale, 11/08/2010 15:56:56 MST

12. AUTOMATIC WAVE SOLDERING 67
12.1 General 67
12.2 Preparation and Assembly 68
12.3 Process Parameters 68
12.4 Wave Soldering 68
12.5 Cleaning 69
12.6 Inspection 69

13. QUALITY ASSURANCE PROVISIONS 70
13.1 General 70
13.2 Magnification Aids 70
13.3 Documentation Verification 70
13.4 Documentation Authorization 71
13.5 Verification of Tools, Equipment, and Materials 72
13.6 Inspection Criteria 72

14. CLEANLINESS REQUIREMENTS 76
14.1 General 76
14.2 Cleanliness Testing 76
14.3 Testing Frequency 76
14.4 Test Limits 76
14.5 Resistivity Of Solvent Extract Test 76
14.6 Sodium Chloride (Nacl) Equivalent Ionic Contamination Test 77

15. VERIFICATION 78
15.1 General 78

APPENDIX A ACCEPTABLE AND UNACCEPTABLE SOLDER CONNECTIONS 79
A.1 Typical acceptable solder connections 79
A.2 Typical unacceptable solder connections. 79

APPENDIX B NASA TECHNICAL STANDARD IMPROVEMENT PROPOSAL 92

LIST OF FIGURES

Figure 6-1. Comfort Zone -- Temperature Versus Humidity Requirements 28
Figure 8-1. Terminal Damage 41

Provided by IHS
No reproduction or networking permitted without license from IHS
Licensee=NASA Technical Standards 4/9972545004, User=Garcia, Jaime
Not for Resale, 11/08/2010 15:56:56 MST

Figure 8-2. Roll Flange Terminal 42
Figure 8-3. V-Funnel Type Swage 42
Figure 8-4. Elliptical Funnel Type Swage 43
Figure 8-5. Stress Relief Examples 43
Figure 8-6. Horizontal Mount 44
Figure 8-7. Vertical Mount 45
Figure 8-8. Radial Leaded Parts 45
Figure 8-9. Hole Obstruction 46
Figure 8-10. Stress Relief Part Termination 46
Figure 8-11. Bend Angle 46
Figure 8-12. Conductors Terminating on Both Sides 47
Figure 8-13. Lapped Lead Height above Board 48
Figure 8-14. Lapped Round Termination 49
Figure 8-15. Lapped Ribbon Leads 50
Figure 8-16. Clinched Termination 51
Figure 8-17. Lead Bend 51
Figure 8-18. Straight-Through Termination 52
Figure 8-19. Straight-Through Lead Retention 52
Figure 9-1. Wrap Orientation 54
Figure 9-2. Conductor Wrap 55
Figure 9-3. Turret Terminal 56
Figure 9-4. Continuous Run Wrapping--Turret Terminals 56
Figure 9-5. Bottom Route Connections to Bifurcated Terminals 57
Figure 9-6. Side Route Connections to Bifurcated Terminals 58
Figure 9-7. Lead Wrap 59
Figure 9-8. Continuous Run Wrapping--Bifurcated Terminals 59
Figure 9-9. Continuous Run Wrapping--Bifurcated Terminals Alternate Procedure 59
Figure 9-10. Connections to Hook Terminals 60
Figure 9-11. Connections to Pierced Terminals 60
Figure 9-12. Connections to Solder Cups (Connector Type) 61
Figure 9-13. Connections to Swaged Type Solder Cup 61
Figure 10-1 Solder-Ball Termination 63
Figure 11-1. Heel Fillet 66
Figure 11-2. Round Lead Termination 66

LIST OF TABLES

Table 6-1. Solvents and Cleaners. Solvents and Cleaners 34
Table 7-1. Solder Contaminant Levels Maximum Allowable Percent by Weight of Contaminant 37
Table 14-1. Cleanliness Test Values 77

Provided by IHS
No reproduction or networking permitted without license from IHS
Licensee=NASA Technical Standards 4/9972545004, User=Garcia, Jaime
Not for Resale, 11/08/2010 15:56:56 MST

SOLDERED ELECTRICAL CONNECTIONS

1. SCOPE

1.1 Purpose

1.1.1 This publication sets forth requirements for hand and wave soldering to obtain reliable electrical connections. The prime consideration is the physical integrity of solder connections.

1.1.2 Special requirements may exist that are not covered by or are not in conformance with the requirements of this publication. Engineering documentation shall contain the detail for such requirements, including modifications to existing hardware, and shall take precedence over appropriate portions of this publication when approved in writing by the procuring NASA Center prior to use (Requirement).

1.2 Applicability

1.2.1 This publication applies to NASA programs involving soldering connections for flight hardware, mission critical ground support equipment, and elements thereof, and wherever invoked contractually.

1.2.2 This publication does not define the soldering requirements for Surface Mount Technology (SMT).

Provided by IHS
No reproduction or networking permitted without license from IHS

Licensee=NASA Technical Standards 4/9972545004, User=Garcia, Jaime
Not for Resale, 11/08/2010 15:56:56 MST

2. APPLICABLE DOCUMENTS

2.1 Applicable Specifications

Copies of the following specifications, when required in connection with a specific procurement, can be obtained from the procuring NASA Center or as directed by the contracting officer. Unless otherwise specified, the issue in effect on the date of invitation for bids or requests for proposal shall apply. The following related documents form a part of this publication to the extent specified herein.

FEDERAL SPECIFICATIONS:

27 CFR 21.35	Code of Federal Regulations, Title 27, Alcohol, Tobacco, and Firearms, Part 21, Formulas for Denatured Alcohol and Rum, Subpart D, Specially Denatured Spirits Formulas and Authorized Uses, Formula No. 3-A
TT-I-735	Isopropyl Alcohol
O-M-232	"Methanol (Methyl Alcohol)"

NATIONAL STANDARDS:

ANSI/ESD S20.20	Protection of Electrical and Electronic Parts, Assemblies and Equipment (Excluding Electrically Initiated Explosive Devices)
ANSI/J-STD-004	Requirements for Soldering Fluxes
ANSI/J-STD-006	Requirements for Electronic Grade Solder Alloys and Fluxed and Non-Fluxed Solid Solders for Electronic Soldering Applications
ASTM/D1007	Standard Specification for Secondary Butyl Alcohol
NCSL Z540.1	Calibration Laboratories and Measuring and Test Equipment - General Requirements

2.2 Other Documents:

29 CFR	Occupational Safety and Health Administration
	Industrial Ventilation: A Manual of Recommended Practice. Published by the American Conference of Governmental Industrial Hygienists; 1330 Kemper Meadow Drive; Cincinnati, OH 45240. URL http://www.acgih.org

--`,,`,`,`,`,``,,,`,`,`,,`,`,,`,`,,`---

Provided by IHS
No reproduction or networking permitted without license from IHS

Licensee=NASA Technical Standards 4/9972545004, User=Garcia, Jaime
Not for Resale, 11/08/2010 15:56:56 MST

3. DEFINITIONS AND ACRONYMS

3.1 Definitions

The following definitions apply to terms used in this Standard.

Article. A unit of hardware or any portion thereof required by the contract.

*Assembly***.** A functional subdivision of a component, consisting of parts or subassemblies that perform functions necessary for the operation of the component as a whole. Examples: regulator assembly, power amplifier assembly, gyro assembly, etc.

*Axial lead***.** Lead wire extending from a component or module body along its longitudinal axis.

Bifurcated (split) Terminal. A terminal with a slot or split opening in which conductors are placed before soldering.

*Birdcage***.** A defect in stranded wire where the strands in the stripped portion between the covering of an insulated conductor and a soldered connection (or an end-tinned lead) have separated from the normal lay of the strands.

*Blister***.** Raised areas on the surface of the laminate caused by the pressure of volatile substances entrapped within the laminate.

*Blow Hole***.** A cavity in the solder surface whose opening has an irregular and jagged form, without a smooth surface.

*Bridging***.** A buildup of solder between components, conductors, and/or base substrate forming an undesired conductive path.

*Certification***.** The act of verifying and documenting that personnel have completed required training and have demonstrated specified proficiency and have met other specified requirements.

*Circumferential Separation***.** A crack or void in the plating extending around the entire circumference of a PTH, or in the solder fillet around the conductor, in the solder fillet around an eyelet, or at the interface between a solder fillet and a land.

*Cold Flow***.** Movement of insulation (e.g. Teflon) caused by pressure.

*Cold Solder Connection***.** A solder connection exhibiting poor wetting and a grayish, porous appearance due to insufficient heat, inadequate cleaning before to soldering, or excessive impurities in the solder.

*Component***.** A functional subdivision of a system, generally a self-contained combination of assemblies performing a function necessary for the system's operation. Examples: power supply, transmitter, gyro package, etc.

Provided by IHS
No reproduction or networking permitted without license from IHS
Licensee=NASA Technical Standards 4/9972545004, User=Garcia, Jaime
Not for Resale, 11/08/2010 15:56:56 MST

*Conduction Soldering***.** Method of soldering which employs a soldering iron for transfer of heat to the soldering area.

*Conductor***.** A lead, solid or stranded, or printed wiring path serving as an electrical connection.

*Conformal Coating***.** A thin electrically nonconductive protective coating that conforms to the configuration of the covered assembly.

*Connection***.** An electrical termination that was soldered. A solder joint.

Construction Analysis. The process of destructively disassembling, testing, and inspecting a device for the purpose of determining conformance with applicable design, process, and workmanship requirements. This process is also known as Destructive Physical Analysis (DPA).

*Contaminant***.** An impurity or foreign substance present in a material that affects one or more properties of the material. A contaminant may be either ionic or nonionic. An ionic, or polar compound, forms free ions when dissolved in water, making the water a more conductive path. A non-ionic substance does not form free ions, nor increase the water's conductivity. Ionic contaminants are usually processing residue such as flux activators, finger prints, and etching or plating salts.

*Crazing***.** An internal condition occurring in the laminate base material in which the glass fibers are separated from the resin.

*Cup Terminal***.** A hollow, cylindrical terminal to accommodate one or more conductors.

*Delamination***.** A separation between plies within a base material or any planar separation within a multilayer PWB.

*Deviation***.** A specific authorization, granted before the fact, to depart from a particular requirement of specifications or related documents.

*Dewetting***.** The condition in a soldered area in which the liquid solder has not adhered intimately, but has receded, characterized by an abrupt boundary between solder and conductor, or solder and terminal/termination area leaving irregularly shaped mounds of solder separated by areas covered with a thin solder film.

*Disturbed Solder Joint***.** Unsatisfactory connection resulting from relative motion between the conductor and termination during solidification of the solder.

*Dross***.** Oxide and other contaminants that form on the surface of molten solder.

*Egress***.** An opening that provides a pathway from the interior of an enclosed space.

*Encapsulating Compound***.** An electrically nonconductive compound used to completely enclose and fill in voids between electrical components or parts.

*Excessive Solder Joint***.** Unsatisfactory solder connection wherein the solder obscures the configuration of the connection.

Provided by IHS
No reproduction or networking permitted without license from IHS
Licensee=NASA Technical Standards 4/9972545004, User=Garcia, Jaime
Not for Resale, 11/08/2010 15:56:56 MST

*Eyelet***.** A hollow tube inserted in a terminal or PWB to provide mechanical support for component leads or for electrical connection.

*Flatpack***.** A part with two straight rows of leads (normally on 0.050 inch centers) that are parallel to the part body.

*Fillet***.** A smooth concave buildup of material between two surfaces; e.g., a fillet of solder between a conductor and a solder pad or terminal.

*Flux***.** A chemically-active compound which, when heated, removes minor surface oxidation, minimizes oxidation of the basis metal, and promotes the formation of an intermetallic layer between solder and basis metal.

*Fractured Solder Joint***.** A joint showing evidence of cracking, resulting from movement between the conductor and termination, after solidification of the solder.

*Haloing***.** Mechanically-induced fracturing or delaminating on or below the surface of the base PWB material; it is usually exhibited by a light area around holes, other machined areas, or both.

*Hook Terminal***.** A terminal formed in a hook shape.

*Insufficient Solder Connection***.** A solder connection characterized by incomplete coverage of one or more of the metal surfaces being joined or by incomplete solder fillets.

*Interfacial Connection***.** A conductor that connects conductive patterns between opposite sides of a PWB.

*Interlayer Connection***.** An electrical connection between conductive patterns in different layers of a PWB.

*Joint***.** A solder joint; a termination.

*Lifted Land***.** A land that has lifted or separated from the base material, whether or not any resin is lifted with the land.

*Mission Essential Support Equipment***.** Equipment used in a closed loop with the system, where failure of this equipment would degrade the mission or imperil personnel. This category includes items of ground support equipment whose functions are necessary to support the count down phase and those items of ground support equipment used in pre-count down phases whose problems can create a safety hazard, cause damage to flight hardware, or inability to detect a problem on the flight hardware.

*Measling***.** Discrete white spots below the surface of the base material, usually caused by moisture, pressure, and/or thermally induced stress.

*Nick***.** A cut or notch on a conductor.

*Nonwetting***.** A condition whereby a surface has contacted molten solder, but the solder has not adhered to all of the surface; basis metal remains exposed.

Provided by IHS
No reproduction or networking permitted without license from IHS
Licensee=NASA Technical Standards 4/9972545004, User=Garcia, Jaime
Not for Resale, 11/08/2010 15:56:56 MST

*Offgassing***.** The release of volatile parts from a substance when placed in a vacuum environment that may affect crew members.

*Outgassing***.** The release of volatile parts from a substance when placed in a vacuum environment.

*Overheated Joint***.** An unsatisfactory solder joint, characterized by rough solder surface; dull, chalky, grainy, porous or pitted.

*Pad***.** A portion of a conductive pattern used as a soldering area. Also called a land.

*Part***.** An element of a component, assembly, or subassembly that is not normally subject to further subdivision or disassembly without destruction of designed use.

*Part Lead***.** The solid conductor attached to a part.

Pierced (Perforated) Terminal. A terminal containing a hole through which conductors are placed before soldering.

*Pinhole***.** A solder connection with a small hole penetrating from the surface of the solder to a void of indeterminate size within the solder connection.

*Pit***.** A relatively small recess in the solder surface, the bottom of which is visible from all angles of vision.

*Plated-Through-Hole***.** A plated-through hole is one formed by a deposition of metal on the inside surface of a through-hole. Also known as a supported hole. The configuration is used to provide additional mechanical strength to the soldered termination or to provide an electrical interconnection on a multilayer PWB.

Porous Solder Joint**.** A joint having a grainy or gritty surface.

*Potting Compound***.** An electrically nonconductive compound used to partially encapsulate or for a filler between parts, conductors, or assemblies.

Printed Wiring Assembly. The PWA consists of the PWB, components, and associated hardware and materials.

*Printed Wiring Board***.** A pattern of conductors printed (screened) onto the surface of an insulating base to provide interconnection for parts.

Radial Lead**.** Lead wire extending from a component or module body along its latitudinal axis.

*Radial Split***.** A crack or other separation in the flange of an eyelet or other circular connector, which extends outward from the center. Such cracking is usually the result of swaging or other setting process as the item is embraced in a printed wiring board.

*Repair***.** Operations performed on a nonconforming article to place it in usable condition. Repair is distinguished from rework in that alternate processes rather than reprocessing are employed.

Provided by IHS
No reproduction or networking permitted without license from IHS
Licensee=NASA Technical Standards 4/9972545004, User=Garcia, Jaime
Not for Resale, 11/08/2010 15:56:56 MST

*Resistance Soldering***.** Method of soldering by passing a current between two electrodes through the area to be soldered.

*Rework***.** The reprocessing of articles or material that will make it conform to drawings, specifications, and contract.

*Rosin Solder Joint***.** Unsatisfactory connection that has entrapped rosin flux. This entrapment is usually due to insufficient heat or insufficient time at soldering temperature, or both, not enabling the rosin to rise to the surface of the solder. This results in insufficient bonding and/or high electrical resistance.

*Solder***.** A nonferrous, fusible metallic alloy used to join metallic surfaces.

*Solderability***.** The property of a surface that allows it to be wetted by a molten solder.

*Solder Connection***.** An electrical/mechanical connection that employs solder for the joining of two or more metal surfaces.

*Solder Mask***.** Coating material used to mask or protect selected areas of a pattern from the action of an etchant, solder, or plating.

*Solder Pad***.** Termination area on a printed wiring conductor.

*Solder Spatter***.** Extraneous irregular-shape solder fragments.

*Solder Spike***.** A cone shaped peak or sharp point of solder usually formed by the premature cooling and solidification of solder on removal of the heat source.

*Soldering***.** The process of joining clean metallic surfaces through the use of solder without direct fusion of the base metals.

*Staking Compound***.** An electrically nonconductive adhesive material used for additional support after a component has been attached by mechanical or soldering process.

*Straight Pin Terminal***.** A round post-type smooth terminal, with no grooves.

Straight-Through Termination. A conductor termination extending through a PWB without subsequent forming of the lead.

*Stress Relief***.** The formed portion of a conductor that provides sufficient length to minimize stress between terminations.

*Stud Termination***.** An unbendable conductor termination extending through a PWB.

*Supplier***.** In-house NASA, NASA contractors, and subtier contractors.

Surface Mounting. The electrical connection of components to the surface of a conductive pattern that does not utilize part holes.

Provided by IHS
No reproduction or networking permitted without license from IHS

Licensee=NASA Technical Standards 4/9972545004, User=Garcia, Jaime
Not for Resale, 11/08/2010 15:56:56 MST

Supportive Hole. A hole in a printed board that has its inside surface plated or otherwise reinforced.

Terminal. A tie point device used for making electrical connection.

*Termination***.** The point at which electrical conductors are joined.

Termination Area. A conductive surface on a PWB used for making electrical connections (also referred to as a solder pad).

Thermal Shunt. A device with good heat dissipation characteristics used to conduct heat away from an article being soldered.

Tinning. The coating of a surface with a uniform layer of solder.

Tubelet. A tubular metal part. Its ends may or may not be flared.

Turret Terminal**.** A round post-type grooved stud around which conductors are fastened before soldering.

Unsupported Hole. A hole containing no plating or other type of conductive reinforcement.

Via. A PTH used as an interlayer connection, but in which there is no intention to insert a component or other reinforcing material.

Void. A space enclosed on all sides by the solder.

Wave Soldering. A process wherein PWAs are brought in contact with the surface of continuously flowing and circulating solder.

Wetting. Flow and adhesion of a liquid to a solid surface, characterized by smooth, even edges, and a low dihedral angle.

*Wicking***.** A flow of molten solder, flux, or cleaning solution by capillary action.

3.2 Acronyms

The following acronyms apply to terms used in this Standard.

ACS	American Chemical Society
ANSI	American National Standards Institute
ASTM	American Society for Testing and Materials
AWG	American Wire Gage
CFR	Code of Federal Regulation
CVCM	Collected Volatile Condensable Material

Provided by IHS
No reproduction or networking permitted without license from IHS
Licensee=NASA Technical Standards 4/9972545004, User=Garcia, Jaime
Not for Resale, 11/08/2010 15:56:56 MST

DWV	Dielectric Withstanding Voltage
EEE	Electrical, Electronic, and Electromechanical
EMI	Electromagnetic Interference
ESD	Electrostatic Discharge
ESDS	Electrostatic Discharge Sensitive
FEP	Fluorinated Ethylene Propylene
GHz	Gigahertz
GSFC	Goddard Space Flight Center
IR	Insulation Resistance
JPL	Jet Propulsion Laboratory
lm/m^2	Lumens per Square Meter
MSDS	Material Safety Data Sheet
NaCl	Sodium Chloride
NASA	National Aeronautic and Space Administration
NASA-STD	NASA Standard
NIST	National Institute of Standards and Technology
OD	Outside Diameter
OSHA	Occupational Safety and Health Administration
PTH	Plated Through Hole
PWA	Printed Wiring Assembly
PWB	Printed Wiring Board
RF	Radio Frequency
RFI	Radio Frequency Interference
RH	Relative Humidity
RMS	Root Mean Squared

Provided by IHS
No reproduction or networking permitted without license from IHS

Licensee=NASA Technical Standards 4/9972545004, User=Garcia, Jaime
Not for Resale, 11/08/2010 15:56:56 MST

ROSE	Resistivity of Solvent Extract
SMT	Surface Mount Technology
TML	Total Mass Loss

Provided by IHS
No reproduction or networking permitted without license from IHS

Licensee=NASA Technical Standards 4/9972545004, User=Garcia, Jaime
Not for Resale, 11/08/2010 15:56:56 MST

4. GENERAL

4.1 General

4.1.1 Implementation. NASA quality assurance personnel will advise and assist suppliers, NASA personnel, and delegated agencies in the proper and effective implementation of the provisions of this publication. Effective implementation includes establishing a system that will identify each inspection point and maintain records.

4.1.2 Changes in Requirements. When related requirements or changes in requirements are specified, NASA quality assurance personnel will assure that the Government agency delegated to inspect at the supplier's site of fabrication has received full instructions so that the work will be inspected to actual contract requirements.

4.1.3 Nonstandard Processes, Materials, or Parts. When the supplier intends to use processes, materials, or parts not covered by this publication, the supplier document the details of fabrication and inspection, including acceptance and rejection criteria, and shall provide appropriate test data. Such documentation shall be approved by the procuring NASA Center prior to use (Requirement).

4.1.4 Internal Conditions. Unless parts are manufactured specifically to comply with contracts or subcontracts citing this publication, internal connections of parts (as parts are defined in Appendix B) are not subject to the requirements of this publication. The supplier shall assure that parts have suitable internal solder connections that will not unsolder or deteriorate when tinning is performed or external connections are made (Requirement).

4.1.5 Work Should Be Halted. If at any time, during any phase of the part mounting and/or the soldering operation, a condition should arise that the operator feels may damage or in any way affect the reliability of the hardware, the work should be halted until that condition is reviewed and resolved.

4.1.6 Material Safety Data Sheets (MSDS). MSDS shall be available for solders, fluxes, solvents, and cleaners used in the area (Requirement).

4.2 Approval of Departures From This Standard

4.2.1 Departures from this Standard require written approval from the cognizant NASA contracting officer. The supplier is responsible for assuring that any departures from this publication are evaluated by, coordinated with, and submitted to the procuring NASA Center for approval prior to use or implementation.

4.2.2 For in-house NASA projects, this publication requires written approval by the in-house NASA project management to deviate from the provisions herein.

Provided by IHS
No reproduction or networking permitted without license from IHS
Licensee=NASA Technical Standards 4/9972545004, User=Garcia, Jaime
Not for Resale, 11/08/2010 15:56:56 MST

4.3 Reliable Soldered Connections

4.3.1 Reliable soldered connections result from proper design; control of tools, materials, processes, and work environments; use of properly trained and skilled personnel; and careful workmanship.

4.3.2 The following requirements and design objectives should be used to ensure the reliable soldered connections required by NASA:

a. Stress relief should be inherent in the design to avoid detrimental thermal and mechanical stresses on the solder connections.

b. Where stress relief is not used, a plated-through hole (PTH) is mandatory.

c. Materials selection should provide minimal thermal expansion coefficient mismatch at the constraint points of the parts mounting configuration.

d. Parts mounting design requirements shall allow full visual or nondestructive inspection of all soldered connections (Requirement).

4.4 Documentation

4.4.1 The supplier shall document the methods and procedures proposed to incorporate the requirements of this publication into the design, fabrication, and inspection of solder connections involved in the contract or purchase order (Requirement).

4.4.2 Documents required herein, except as specified by paragraph 4.1-3, shall be submitted to the procuring NASA Center or its designated representative as required by the contract or purchase order (Requirement). Applicable supplier soldering program documents, or portions thereof, accepted on other NASA contracts shall be included whenever possible to avoid duplication of effort (Requirement).

4.5 Rework And Repair

4.5.1 Rework. Rework is permissible unless excluded by other provisions of the contract. All rework shall meet the requirements of this Standard and approved engineering documentation (Requirement).

4.5.2 Repair is not rework. Repairs shall be made only in compliance with applicable contractual requirements and after authorization for each incident by the procuring NASA Center (Requirement). Repairs shall be accomplished using documented methods previously approved by the procuring NASA Center (Requirement). For in-house NASA projects, repairs shall be authorized for each incident by the Project Office and Quality Management, as appropriate (Requirement).

Provided by IHS
No reproduction or networking permitted without license from IHS
Licensee=NASA Technical Standards 4/9972545004, User=Garcia, Jaime
Not for Resale, 11/08/2010 15:56:56 MST

5. TRAINING AND CERTIFICATION PROGRAM

5.1 General

5.1.1 The supplier is responsible for maintaining a documented training program that meets the requirements of this Standard.

5.1.2 The supplier shall assure that the electronics packaging design personnel are familiar with the requirements of this Standard, soldering techniques, and other pertinent requirements of the contract (Requirement). The supplier shall implement and document a training program that provides the necessary training of soldering and inspection personnel in parts mounting and connections requirements, soldering techniques, and use of equipment and procedures pertinent to their responsibilities in performance of the contract requirements (Requirement). The supplier is responsible for certifying and maintaining the certification of each individual who solders, inspects, or instructs.

5.1.3 Operators, inspectors, and instructors shall be qualified to fulfill all requirements of this Standard that relate to their assigned tasks (Requirement). Demonstration of proficiency and understanding of the requirements is a requisite for certification and recertification. Evidence of certification status shall be maintained in the work area (Requirement).

5.2 Vision Requirements

5.2.1 The supplier is responsible for ensuring that all personnel who perform or inspect soldered electrical connections meet the following vision test requirements as a prerequisite to training, certification, and recertification. The vision requirements may be met with corrected vision (personal eyeglasses). The vision tests shall be administered every 2 years by a qualified eye examiner, accepted by the procuring supplier, using standard instruments and techniques (Requirement). Results of the visual examinations shall be maintained and available for review (Requirement).

5.2.2 The following are minimum vision requirements:

a. Far Vision. Snellen Chart 20/50.

b. Near Vision. Jaeger 1 at 35.5cm (14 inches), reduced Snellen 20/20, or equivalent.

c. Color Vision. Ability to distinguish red, green, blue, and yellow colors as prescribed in Dvorine Charts, Ishihara Plates, or AO-HRR Tests.

NOTE: ***A practical test using color coded wires and/or color coded electrical parts, as applicable, is acceptable for color vision testing.***

Provided by IHS
No reproduction or networking permitted without license from IHS
Licensee=NASA Technical Standards 4/9972545004, User=Garcia, Jaime
Not for Resale, 11/08/2010 15:56:56 MST

5.3 Certification Levels

5.3.1 Level A NASA instructors are certified by the NASA Training and Certification Board. Level A NASA instructors have the authority to train Level B instructors, operators, and inspectors. Upon successful course completion, a certificate shall be issued (Requirement).

5.3.2 Certification of Level B instructors will be provided by the supplier based on successful completion of training by a Level A NASA instructor. Level B instructors are authorized to train operators and inspectors employed at their organization and subtier contractors.

5.3.3 Certification of inspectors shall be provided by the supplier based on successful completion of training by a Level A NASA instructor or Level B supplier instructor (Requirement). An inspector is trained and certified to inspect for conformance with the requirements of this Standard.

5.3.4 Certification of operators shall be provided by the supplier based on successful completion of training by a Level A NASA instructor or Level B supplier instructor (Requirement). An operator is trained and certified to perform solder connections in conformance with the requirements of this Standard. When operators are certified to perform limited operations or processes, it shall be stated on the certification card (Requirement).

5.4 Training Program Requirements

5.4.1 The supplier is responsible for training and certification of operators and inspectors in soldering processes and associated processing equipment.

5.4.2 The supplier training program documentation shall be submitted to the procuring NASA Center as directed by contract. A NASA Generic Soldered Electrical Connections Training Plan from the NASA Training Centers is available for use as a guideline.

5.4.3 The training program shall:

a. Identify the criteria for qualification and certification of Level B instructors, operators, and inspectors (Requirement).

b. Document the methods and procedures proposed to fulfill the requirements of this Standard (Requirement).

c. Use visual standards consisting of satisfactory work samples or visual aids that clearly illustrate the quality characteristics of soldered connections applicable to the contract (Requirement).

d. Use applicable illustrations in this Standard, supplemented as necessary, for visual standards. Standards of unacceptable conditions may also be used for clarification or comparison (Requirement).

e. Make applicable standards readily available (Requirement).

--`,,`,`,`,`,``,```,,,`,`,``,```,-`-`,,`,,`,`,,`---

Provided by IHS
No reproduction or networking permitted without license from IHS

Licensee=NASA Technical Standards 4/9972545004, User=Garcia, Jaime
Not for Resale, 11/08/2010 15:56:56 MST

5.4.4 Wave Soldering Process Training Requirements. The supplier is responsible for training and certifying the wave soldering process instructors and operators.

5.5 Documentation

5.5.1 The supplier training program documentation shall describe the training and certification program proposed to satisfy the requirements herein for the types of solder connections to be made (Requirement). This description shall include the following, as applicable (Requirement):

a. Qualifications of instructors.

b. Procedures for training, including who will be trained and for what purpose, (e.g., operator, inspector).

c. Lesson plan(s)/student standards.

d. Hours of instruction.

e. Procedures for certification and recertification.

f. Procedures for recording training, recertification, and method of identifying/recalling trained personnel.

g. Certification criteria.

5.5.2 Records of training and certification shall become part of the supplier's quality data and shall be retained for a minimum of 5 years (Requirement).

5.5.3 Evidence of certification status, including limitations, shall be available in the work area (Requirement).

5.6 Maintenance of Certification Status

5.6.1 Maintenance of certification for instructors, operators, and inspectors requires continuous proficiency.

5.6.2 Recertification of Level B instructors shall include the successful completion of retraining by a Level A NASA instructor (Requirement). Recertification of operators and inspectors shall include successful completion of retraining by a Level A NASA instructor or a Level B supplier instructor (Requirement).

5.6.3 Recertification shall be required (Requirement) when:

a. Proficiency requirements herein are not met.

(1) Instructors - proficiency unacceptable.

(2) Operators - unsatisfactory quality of articles fabricated.

Provided by IHS
No reproduction or networking permitted without license from IHS

Licensee=NASA Technical Standards 4/9972545004, User=Garcia, Jaime
Not for Resale, 11/08/2010 15:56:56 MST

(3) Inspectors - unsatisfactory quality of inspection.

(4) Quality/quantitative data demonstrates a need for recertification.

b. New soldering or inspection techniques have been approved that require different skills.

c. Work period interruption of greater than 6 months occurs.

d. Two years has elapsed since last certification.

5.6.4 Certification shall be revoked (Requirement) when:

a. Certificate holder fails recertification.

b. Certificate holder fails to meet visual acuity requirements of paragraph 5.2.

c. Employment is terminated.

d. Supplier training program fails to meet requirements set forth herein or set forth otherwise in the contract.

5.7 Training Resources

5.7.1 Training of Level B instructors is available at either the East Coast NASA Manufacturing Technology Transfer Center (NMTTC) associated with Goddard Space Flight Center (GSFC) or the West Coast NMTCC associated with the Jet Propulsion Laboratory (JPL). The NASA Generic Soldered Electrical Connections Training Plan will be supplied to instructors at the time of course completion.

a. GSFC
NASA's Manufacturing Technology Transfer Center (MTTC) (Eastern Region)
Code 300.1
Greenbelt, MD 20771
(410) 964-7616 FAX (410) 964-7609

b. JPL
NASA's Manufacturing Technology Transfer Center (MTTC) (Western Region)
MS83-204
4800 Oak Grove Drive
Pasadena, CA 91109
(818) 354-6730 FAX (818) 393-0090

5.7.2 Suppliers may train operator or inspector personnel in-house for certification or recertification using certified instructors and approved soldering training programs, or arrange for this training at one of the NASA-conducted schools.

5.7.3 A fee is required. Contact either training center for information.

Provided by IHS
No reproduction or networking permitted without license from IHS
Licensee=NASA Technical Standards 4/9972545004, User=Garcia, Jaime
Not for Resale, 11/08/2010 15:56:56 MST

6. FACILITIES, EQUIPMENT, MATERIALS, AND PARTS

6.1 Facility Cleanliness

The work area shall be maintained in a clean and orderly condition (Requirement). Smoking, eating, and drinking in soldering areas and at individual work stations shall not be permitted (Requirement). Nonessential tools and materials shall not be permitted at the workstation (Requirement).

6.2 Environmental Conditions

6.2.1 Controlled Environment. The soldering area shall have a controlled environment that limits the entry of contamination (Requirement). It shall be documented that the temperature and humidity of this area are monitored and maintained within the limits defined as the comfort zone in Figure 6-1 (Requirement).

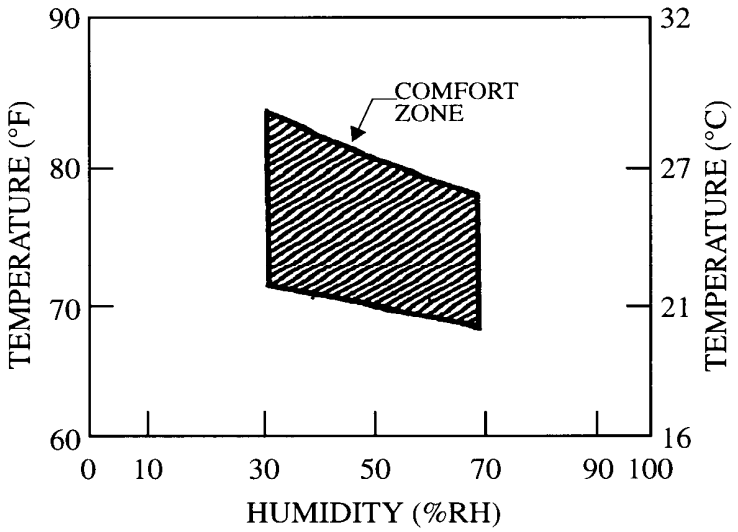

Figure 6-1. Comfort Zone -- Temperature Versus Humidity Requirements

6.2.2 Special Environmental Requirements. Parts or equipment being processed that require more stringent control of environmental conditions than those stated above shall have these requirements and controls identified and specified on the engineering documentation (Requirement).

6.2.3 Ventilation System. Areas used for cleaning parts, and areas where toxic or volatile vapors are generated, shall have a ventilation system for removing air contaminants (Requirement). The ventilation system shall comply with the recommendations and guidelines of the Occupational Safety and Health Administration (OSHA) requirements, 29CFR (Requirement).

6.2.4 Field Operations. In field operations where the required controlled environment conditions cannot be effectively achieved, special precautions shall be taken to maximize the

Provided by IHS
No reproduction or networking permitted without license from IHS
Licensee=NASA Technical Standards 4/9972545004, User=Garcia, Jaime
Not for Resale, 11/08/2010 15:56:56 MST

quality of solder connections and minimize the effects of the uncontrolled environment on the operation being performed on the hardware (Requirement). These precautions shall be identified in the appropriate documentation (Requirement).

6.2.5 Lighting. Light intensity shall be a minimum of 1077 lumens per square meter (lm/m2) (100 foot-candles) on the surface where soldered electrical connections are being performed, inspected, or tested (Requirement). Supplemental lighting may be used to achieve the required lighting levels.

6.3 Electrostatic Discharge Requirements

The supplier shall implement an electrostatic discharge (ESD) Control Program (Requirement). ESD requirements shall be in accordance with ANSI/ESD S20.20, Protection of Electrical and Electronic Parts, Assemblies and Equipment (Excluding Electrically Initiated Explosive Devices) or other approved ESD control procedures (Requirement). This program shall define the ESD control requirements for any activity that tests, inspects, services, manufacturers, installs, packages, labels or otherwise processes ESD sensitive parts or assemblies (Requirement). All personnel who handle static-sensitive parts and assemblies shall have been trained in the proper procedures and in the use of appropriate protective equipment to prevent ESD damage (Requirement).

6.4 Tool and Equipment Control

6.4.1 Each supplier shall:

a. Select tools to be used in soldering and in work preparation areas appropriate to the intended function (Requirement).

b. Clean and properly maintain all tools and equipment (Requirement).

c. Prohibit unauthorized, defective, or uncalibrated tools in the work area (Requirement).

d. Document detailed operating procedures and maintenance schedules for tools and equipment requiring calibration or set-ups. Maintain records of tool and equipment calibration and functional testing (Requirement).

6.4.2 The supplier shall have a documented calibration system in accordance with NCSL Z540.1, Calibration Laboratories and Measuring and Test Equipment - General Requirements (Requirement). The minimum standard shall be:

a. Document or reference, in the supplier's soldering program, detailed operating procedures and maintenance schedules for tools and equipment requiring calibration or set-up. Measurement standards used for calibrating tools must be traceable to National Institute of Standards and Technology (NIST) (Requirement).

b. Maintain records of tool calibration and verification (Requirement).

6.4.3 Power tools used during the soldering process shall comply to the tool requirements herein and have a three-wire grounded power cord (Requirement). The area making contact with the

Provided by IHS
No reproduction or networking permitted without license from IHS
Licensee=NASA Technical Standards 4/9972545004, User=Garcia, Jaime
Not for Resale, 11/08/2010 15:56:56 MST

workpiece shall be grounded. When measured from the workpiece contact point to ground, the resistance shall not exceed 2.0 ohms and the potential difference shall not exceed 2 millivolts root mean squared (RMS) using methods indicated in the supplier's engineering documentation (Requirement).

6.4.4 The supplier's process documentation for tool control is subject to review and approval by the procuring NASA Center. Suppliers may elect to use tools not mentioned in this Standard provided the engineering documentation is reviewed and approved by the procuring NASA Center prior to use.

6.5 Soldering Tools and Equipment

6.5.1 General. Each supplier shall:

a. Select tools and equipment that provide a means of applying and controlling the amount of heat to the metals to be joined that is compatible with their size, shape, and thermal conductivity (Requirement).

b. Prohibit the use of soldering guns (Requirement).

6.5.2 Resistance-Type Soldering. Resistance-type soldering electrodes of tweezer or clamp design, with surfaces that contact the items to be soldered, shall be maintained parallel with each other and free of pits, burn marks, corrosion, and contamination (Requirement).

6.5.3 Conductive-Type Irons. Soldering irons shall be of the temperature controlled type, controllable within ±5.5°C (±10°F) of the preselected idling temperature (Requirement).

CAUTION:	***HEAT SHALL NOT BE APPLIED TO A SOLDERED CONNECTION, OR ANY ADJACENT AREA, IN SUFFICIENT INTENSITY TO DEGRADE THE PART, THE CONNECTION, THE PLATED THROUGH HOLE, OR ANY ASSOCIATED INTERNAL CONNECTIONS, OR DAMAGE ADJACENT PARTS OR AREAS.***

6.5.4 Solder Pots. Solder pots shall be capable of maintaining the solder temperature at ±5.5°C (±10°F) of the preselected temperature (Requirement). Solder pots shall be grounded (Requirement).

CAUTION:	***PRETINNING AND GOLD REMOVAL OPERATIONS SHALL BE PERFORMED IN SUCH A WAY THAT IMMERSION OF PART LEADS INTO THE LIQUID SOLDER DOES NOT CAUSE THE PART LEAD AND PACKAGE TO BECOME HEATED BEYOND THE MAXIMUM TEMPERATURE AND TIME PERMITTED BY THE INDIVIDUAL COMPONENT SPECIFICATION.***

Provided by IHS
No reproduction or networking permitted without license from IHS
Licensee=NASA Technical Standards 4/9972545004, User=Garcia, Jaime
Not for Resale, 11/08/2010 15:56:56 MST

6.5.5 Wave Soldering Equipment. Requirements for wave soldering equipment can be found in Chapter 12.

6.5.6 Supplemental Heat Sources. When supplemental heat is applied by hot gases, radiant energy, or any other source for aiding the hand and wave soldering process, the equipment shall be set up, operated, and maintained by personnel using established and documented procedures that are subject to review by the procuring NASA Center (Requirement).

6.6 Conductor Preparation Tools

6.6.1 Conductor preparation tools shall be selected as follows: Insulation strippers and lead bending tools shall not nick, ring, gouge, or scrape conductors or otherwise damage parts (Requirement). In addition, they shall not contaminate conductors or hinder solder wetting (Requirement).

6.6.2 Insulation stripping tools suitable for use include:

a. Mechanical Strippers. Mechanical strippers used to remove insulation from stranded or solid conductor wires may be of the hand operated or automatic high volume machine type. Hand operated strippers shall be of a fixed die configuration (Requirement). Automatic high volume machine strippers shall be of a type using either fixed dies, dies adjustable to calibrated stops, or roller cutters adjustable to calibrated stops (Requirement). Dies, whether adjustable or fixed, shall be properly maintained to assure consistently sharp and even cuts without damage to the wires or unstripped insulation (Requirement).

b. Thermal Strippers. Thermal strippers used to remove insulation from stranded and solid conductor wires shall be of a type that can provide a regulated temperature required for the insulation type (Requirement). Temperature controls shall be sufficient to prevent damage to the wire or unstripped insulation (Requirement).

c. Chemical Strippers. Chemical solutions, pastes, and creams used to strip wires shall be suitable for removal of the insulation to be stripped and shall not cause degradation to the wire (Requirement). In addition, wires must be neutralized and cleaned of contaminants in accordance with manufacturer's recommended instructions. Chemical stripping materials and methods require pre-approval from the procuring NASA center.

6.6.3 Holding Devices. Tools, fixtures, and materials used to hold or restrain conductors and parts shall be of a design that will not damage or deform the conductors, conductor insulation, or parts.

6.6.4 Bending Tools. Tools used for conductor bending may be automatic or hand operated and shall be of a material that will not cut, nick, or otherwise damage solid or stranded conductors or insulation during the bending operation. Bending tools shall be of a type that imparts no damage to the part bodies or seals (Requirement). Smooth impression marks (base metal not exposed) resulting from bending tool holding forces shall not be cause for rejection (Requirement).

Provided by IHS
No reproduction or networking permitted without license from IHS
Licensee=NASA Technical Standards 4/9972545004, User=Garcia, Jaime
Not for Resale, 11/08/2010 15:56:56 MST

6.6.5 Conductor Cutting Tools. Tools used to cut part leads shall not cause damage to printed wiring boards (PWB's), printed circuitry, or part leads or bodies (Requirement). Shear type cutters should be used for cutting shock-sensitive part leads to prevent damage.

6.6.6 Antiwicking Tools. Antiwicking tools shall be of a design that fits only a specific conductor gage size and should be marked with that conductor gage size.

6.6.7 Cleaning Tools. Cleaning tools shall be selected based on their ability to minimize the generation of static charge (Requirement). Typical cleaning tools include natural bristle brushes, lint-free tissue, cotton swabs, etc. Steel-wire brushes, knives, erasers, emery cloth, sandpaper, and other devices that produce an abrasive action or cause contamination shall not be used (Requirement).

6.7 Thermal Shunts

Thermal shunts shall be used to absorb heat from part leads as necessary to protect parts, insulating materials, and/or previously completed connections from damage during soldering operations (Requirement).

6.8 Inspection Optics

Visual inspection shall be performed using magnification aids conforming to the following:

6.8.1 Magnification aids shall be capable of rendering true colors, proportional dimensions, and adequate resolution at the chosen magnification to perform the specified inspection (Requirement).

6.8.2 The light source shall provide shadowless illumination of the area being viewed (Requirement).

6.9 In-Process Storage and Handling

6.9.1 Each supplier performing soldering operations shall develop and implement requirements and procedures that control conditions to prevent damage to, and degradation of, parts and deliverable items. In particular, means shall be provided to prevent damage or contamination to printed wiring terminating areas, terminals, connectors, wire ends, or part leads during handling and storage (Requirement). Containers shall be compatible with materials stored therein (Requirement).

6.9.2 Contact with bare hands shall be avoided (Requirement). When handling metal surfaces that are to be soldered is unavoidable, clean, lint-free gloves or finger cots shall be used. Gloves and finger cots used shall not generate electrostatic charges (Requirement).

6.9.3 Electrostatic discharge sensitive (ESDS) parts or assemblies shall be stored, handled, or otherwise processed in accordance with the requirements of 6.3 (Requirement).

Provided by IHS
No reproduction or networking permitted without license from IHS
Licensee=NASA Technical Standards 4/9972545004, User=Garcia, Jaime
Not for Resale, 11/08/2010 15:56:56 MST

6.10 Material Solderability

Solderability. All materials to be soldered shall be verified as solderable prior to use (Requirement).

6.11 Solder

6.11.1 Types and Usage. All solder used for tinning and solder connections shall conform to ANSI/J-STD-006 (Requirement). Flux-cored solder shall be either composition SN60 or SN63 containing flux types R or RMA, or equivalent (Requirement). For all soldering applications where adequate subsequent cleaning is not practical, only solder containing flux type R shall be used (Requirement). Solid solders (no flux) for use in solder pots shall be of the same composition (Requirement).

6.11.2 High Temperature. For soldering operations where connections are to be subsequently reheated, the use of high temperature solder alloy is permitted (e.g., SN96AG04A). The type of high temperature solder and the connection requiring the high temperature solder shall be specified on the engineering documentation (Requirement).

6.11.3 Variations. The use of any other solder compositions and forms (including type RA flux) shall require the approval of the procuring NASA Center prior to use (Requirement).

6.12 Liquid Flux

6.12.1 Types and Usage. All fluxes used for tinning and soldering operations shall conform to ANSI/J-STD-004 (Requirement). Process documentation shall describe the types of fluxes, where each is used, and the necessary precautions (Requirement).

6.12.2 Rosin Flux. Flux types R, RMA, or equivalent shall be used (Requirement). For all fluxing applications where adequate subsequent cleaning is not practical, only type R, or equivalent, flux shall be used (Requirement). Liquid flux used with flux-cored solder shall be chemically compatible with the solder core flux and with the materials with which it will come in contact.

6.12.3 Variations. The use of any other flux compositions and forms (including type RA flux) shall require the approval of the procuring NASA Center prior to use (Requirement). The request for approval shall include detailed flux removal, cleaning processes, monitoring requirements, and cleanliness test methods.

6.13 Solvents and Cleaners

6.13.1 The solvents or aqueous cleaners used to remove grease, oil, dirt, flux, or other debris, shall be selected for their ability to remove both ionic and nonionic contamination (Requirement). The solvents or cleaners used shall not degrade the materials or parts being cleaned (Requirement). A list of approved solvents and cleaners is provided in Table 6-1. Mixtures of the approved solvents may be used. Solvent containers shall be properly labeled (Requirement). Refer to Material Safety Data Sheets (MSDS) for proper handling of solvents or cleaners.

Provided by IHS
No reproduction or networking permitted without license from IHS
Licensee=NASA Technical Standards 4/9972545004, User=Garcia, Jaime
Not for Resale, 11/08/2010 15:56:56 MST

Table 6-1. Solvents and Cleaners. Solvents and Cleaners

Solvent	Specification
Denatured Ethyl Alcohol	27 CFR 21.35 Code of Federal Regulations, Title 27, Alcohol, Tobacco, and Firearms, Part 21, Formulas for Denatured Alcohol and, Rum, Subpart D, Specially Denatured Spirits Formulas and Authorized Uses, Formula No. 3-A
Isopropyl Alcohol	TT-I-735
Methyl Alcohol (see 3.12-2)	O-M-232, Grade A
Butyl Alcohol, Secondary (see 3.12-2)	ASTM-D1007
Cleaners	**Specification/Note**
Water	1 megohm-cm, minimum resistivity (see 6.13.3)
Detergent cleaners and saponifiers	(See 6.13.4)

The use of any other solvents or cleaners requires the approval of the procuring NASA Center prior to use and shall be identified in the supplier's process documentation.

CAUTION: CLEANERS AND SOLVENTS SHALL NOT BE USED IN ANY MANNER THAT WILL CARRY TO, OR DEPOSIT RESIDUE ON, ELECTRICAL CONTACT SURFACES SUCH AS THOSE IN SWITCHES, POTENTIOMETERS, OR CONNECTORS.

6.13.2 Methyl alcohol and secondary butyl alcohol shall be used only when purchased as a constituent of an already blended solvent (Requirement). Pure methyl alcohol or secondary butyl alcohol shall not be used alone as a solvent.

6.13.3 When deionized water is used, care shall be exercised to ensure that proper drying is accomplished immediately after its use (Requirement).

6.13.4 Water based saponifier and detergent systems shall require the approval of the procuring NASA Center prior to use (Requirement).

6.13.5 Solvent and cleaning systems have the potential of removing marking information from parts. Appropriate marking permanency tests shall be performed as part of the evaluation procedure for any solvent or cleaning system (Requirement).

Provided by IHS
No reproduction or networking permitted without license from IHS

Licensee=NASA Technical Standards 4/9972545004, User=Garcia, Jaime
Not for Resale, 11/08/2010 15:56:56 MST

WARNING:	***SOLVENTS USED IN THE SOLDERING PROCESSES CAN BE HAZARDOUS AND VOLATILE. THESE MATERIALS SHALL BE USED IN ACCORDANCE WITH THE RECOMMENDATIONS AND GUIDELINES OF THE MANUFACTURER, THE INDUSTRIAL VENTILATION MANUAL OF RECOMMENDED PRACTICES, AND OSHA, 29CFR.***

6.14 Personnel Protection

Personal protective equipment shall be provided as appropriate for the work being performed. Protective equipment shall comply with the requirements of OSHA, 29CFR (Requirement).

Provided by IHS
No reproduction or networking permitted without license from IHS

Licensee=NASA Technical Standards 4/9972545004, User=Garcia, Jaime
Not for Resale, 11/08/2010 15:56:56 MST

7. PREPARATION FOR SOLDERING

7.1 Preparation of Soldering Tools

Users shall check tools daily for proper condition, operation, performance, and cleanliness.

7.2 Preparation of Conductors

7.2.1 Insulation Removal. Stripping tools, used to remove conductor insulation, shall be of the correct size and in correct adjustment and/or calibration (Requirement).

7.2.2 Damage to Insulation. After insulation removal, the remaining conductor insulation shall not exhibit any damage such as nicks, cuts, or charring. Conductors with damaged insulation shall not be used (Requirement). Scuffing from mechanical stripping or slight discoloration from thermal stripping is acceptable.

7.2.3 Damage to Conductors. After removal of the conductor insulation, the conductor shall not be nicked, cut, or scraped to the point that base metal is exposed (Requirement). Part leads and other conductors that have been reduced in the cross-section area shall not be used (Requirement). Smooth impression marks (base metal not exposed) resulting from tool holding forces shall not be cause for rejection (Requirement).

7.2.4 Wire Lay. If disturbed, the lay of wire strands shall be restored as nearly as possible to the original lay (Requirement). The conductor shall be cleaned following restoration to the original lay (Requirement).

7.2.5 Tinning of Conductors. The portion of stranded or solid conductors or part leads that will eventually become a part of the finished solder connection shall be tinned with solder and cleaned prior to attachment (Requirement). Immersion of conductors in a solder bath shall not exceed 5 seconds (Requirement). Liquid flux may be used. The flux shall be applied so that it does not flow under the insulation except for traces carried by wicking (Requirement). Precautions shall be taken when removing flux with a cleaning solvent to prevent excess solvent from flowing under the conductor insulation (Requirement).

a. Hot tinning of solid conductors and part leads should not extend closer than 0.5mm (0.020 inch) to part bodies, end seals, or insulation unless the part configuration and mounting configuration dictate. If closer tinning is required, the part body, end seals, or insulation shall be inspected for damage after tinning and the results recorded (see also paragraph 4.1-3) (Requirement).

b. Solder pots or hand tinning with a soldering iron shall be used (Requirement).

c. Gold plating on all surfaces that become part of finished solder connections shall be removed by two or more successive tinning operations (solder pot or iron), or by other processes demonstrated to have equivalent effectiveness (Requirement).

d. Tinning solder pots shall be analyzed on an established schedule, based on usage, to ensure that they meet the requirements of Table 7-1, and that the total of gold plus copper does not

Provided by IHS
No reproduction or networking permitted without license from IHS
Licensee=NASA Technical Standards 4/9972545004, User=Garcia, Jaime
Not for Resale, 11/08/2010 15:56:56 MST

exceed 0.3 percent (Requirement). Records of the analyses shall be kept (Requirement). The solder pot may be dumped on an established schedule, based on usage, in lieu of analysis. When the solder produces a dull, frosty, or granular appearance on the work, the pot shall be immediately removed from use (Requirement).

Table 7-1. Solder Contaminant Levels
Maximum Allowable Percent by Weight of Contaminant

Contaminant	Percent Allowed
Copper (Cu)	0.25
Gold (Au)	0.20
Cadmium (Cd).	0.005
Zinc (Zn)	0.005
Aluminum (A1)	0.006
Antimony (Sb)	0.5
Iron (Fe)	0.02
Arsenic (As)	0.03
Bismuth (Bi)	0.25
Silver (Ag)	0.10
Nickel (Ni)	0.01
Gold & Copper.	0.30

e. Solder pots used for tinning operations should be maintained at required temperatures and monitored, as a minimum, before and after each tinning operation or 8-hour period of operation.

7.2.6 Conductor Tinning Product Control. Conductor tinning personnel shall ensure that the tinned surfaces exhibit 100 percent coverage (Requirement). Wire strands shall be distinguishable (Requirement).

7.3 Preparation of Printed Wiring Boards, Terminals, and Solder Cups

7.3.1 Termination areas shall have been "tinned" with hot-coated tin-lead solder or hot reflowed electrodeposited tin-lead solder prior to mounting the parts (Requirement). Final solder terminations shall not be made to any PWB or solder cup that has not had the gold removed from the termination area (Requirement).

7.3.2 Terminals and solder cups shall be examined for damage and cleaned prior to the attachment of conductors (Requirement). Terminals and solder cups shall not be modified to accommodate improper conductor sizes (Requirement).

7.3.3 The PWB's shall be cleaned and demoisturized within 8 hours prior to their initial exposure to soldering temperatures (Requirement). The PWB's may be stored for longer periods of time in a controlled moisture-free atmosphere. Demoisturizing may be accomplished by an oven bake at 93°C (200°F) ±5.5°C (±10°F) for a minimum of 4 hours for a printed wiring

Provided by IHS
No reproduction or networking permitted without license from IHS
Licensee=NASA Technical Standards 4/9972545004, User=Garcia, Jaime
Not for Resale, 11/08/2010 15:56:56 MST

assembly (PWA) or 2 hours for a bare PWB, or by a vacuum bake at a lower temperature. The time in and out of the oven or chamber shall be recorded (Requirement).

Provided by IHS
No reproduction or networking permitted without license from IHS

Licensee=NASA Technical Standards 4/9972545004, User=Garcia, Jaime
Not for Resale, 11/08/2010 15:56:56 MST

8. PARTS MOUNTING

8.1 General

Parts, terminals, and conductors shall be mounted and supported as prescribed herein. Dimensions provided in this chapter are for acceptance and/or rejection criteria only (Requirement). Unusual environmental applications require special design measures to provide necessary environmental survival capability. Such measures shall be detailed on the appropriate engineering documentation (Requirement). Engineering documentation shall prescribe which alternative approach is selected, as well as staking compounds and conformal coating requirements (Requirement). They shall also detail any special mounting arrangements or design requirements not fully covered herein (Requirement).

8.1.1 Stress Relief. Stress relief shall be incorporated, wherever possible, into all leads and conductors terminating in solder connections to provide freedom of movement of part leads or conductors between points of constraint (Requirement). Leads shall not be temporarily constrained against spring-back force during solder solidification so that the joint is subject to residual stress (Requirement). Examples of stress relief are shown in figures throughout this chapter.

8.1.2 Part Positioning. Parts shall be positioned in compliance with the engineering documentation and mounted in accordance with the requirements specified herein (Requirement).

a. Parts shall be mounted so that terminations of other parts are not obscured (Requirement). When this is not possible, interim assembly inspection shall occur to verify that the obscured solder joints meet the requirements herein (Requirement).

b. Parts having conductive cases mounted over printed conductors or which are in close proximity with other conductive materials shall be separated by insulation of suitable thickness (Requirement). Insulation shall be accomplished so that part identification markings remain visible and legible (Requirement).

8.1.3 Visibility of Markings. Where possible, parts shall be mounted in such a manner that markings pertaining to value, part type, etc., are visible (Requirement). For parts marked in such a way that some of the marking will be hidden regardless of the orientation of the part, the following shall be the order of precedence for which markings shall be visible (Requirement):

a. Polarity.

b. Traceability code (if applicable).

c. Piece part value and type.

8.1.4 Glass Encased Parts. Glass encased parts such as diodes, thermistors, or resistors shall be covered with transparent resilient sleeving or other approved material when epoxy material is

Provided by IHS
No reproduction or networking permitted without license from IHS
Licensee=NASA Technical Standards 4/9972545004, User=Garcia, Jaime
Not for Resale, 11/08/2010 15:56:56 MST

used for staking, conformal coating, or encapsulating or where damage from other sources is likely (Requirement). The epoxy material shall not be applied directly to glass (Requirement).

CAUTION:	***WHEN USING HEAT SHRINKABLE SLEEVING, EXTREME CARE SHOULD BE TAKEN TO PREVENT PART DAMAGE DUE TO EXCESSIVE HEAT OR SHRINKAGE OF THE SLEEVING.***

8.1.5 Hookup Wire. Hookup wire, solid or stranded, shall be supported by a means other than the solder connections or conformal coating if wire length exceeds 2.54cm (1 inch) (Requirement). Attachment to a surface by staking with resin is considered adequate support.

8.1.6 Lead Bending and Cutting.

a. During bending or cutting, part leads shall be supported on the body side to minimize axial stress and avoid damage to seals or internal bonds (Requirement). The distance from the bend to the end seal shall be approximately equal at each end of the part (Requirement). The minimum distance from the part body or seal to the start of the bend in a part lead shall be 2 lead diameters for round leads and 0.5mm (0.020 inch) for ribbon leads (Requirement). The stress relief bend radius shall not be less than the lead diameter or ribbon thickness (Requirement). The direction of the bend should not cause the identification markings on the mounted part to be obscured. Where the lead is welded (as on a tantalum capacitor) the minimum distance is measured from the weld.

b. Part leads shall be formed so that they may be installed into the holes in the PWB without excessive deformation that can stress the part body or end seals (Requirement).

c. All leads should be tinned and formed before mounting the part.

CAUTION:	***WHERE POSSIBLE, PART LEADS THAT ARE SUBJECT TO STRESS CORROSION CRACKING (E.G. KOVAR LEADS), SHALL BE PREFORMED AND TRIMMED PRIOR TO TINNING.***

d. Whether formed manually or by machine, part leads shall not be mounted if they show evidence of nicks or deformations (Requirement). Smooth impression marks (base metal not exposed) resulting from tool holding forces shall not be cause for rejection.

e. Tempered leads (sometimes referred to as pins) shall not be bent nor formed for mounting purposes since body seals and connections internal to the part may be damaged (Requirement). Tempered leads or leads with a diameter of 1.27mm (0.05 inch) or more shall not be cut with diagonal cutters or other tools that impart shock to connections internal to the part (Requirement).

Provided by IHS
No reproduction or networking permitted without license from IHS

Licensee=NASA Technical Standards 4/9972545004, User=Garcia, Jaime
Not for Resale, 11/08/2010 15:56:56 MST

8.1.7 Coated Parts. Parts shall be mounted so that the insulating coating meniscus applied by the manufacturer on the leads does not enter the mounting hole or soldered connection (Requirement).

8.1.8 Splices. Broken or damaged conductors, part leads, or printed wiring conductors shall not be spliced (Requirement).

8.1.9 Location. Part bodies shall not be in contact with soldered terminations (Requirement).

8.2 Mounting of Terminals

8.2.1 General. Use of terminals shall generally be restricted to situations where parts are expected to be removed and replaced, or where there are other compelling design requirements for their use (Requirement).

a. Terminals shall not be used as the interface connections in non-plated through holes (PTH's) (Requirement). Swaging of terminals shall be performed in a way that does not damage the PWB (Requirement).

b. After swaging or flaring, the rolled area or flange shall be free of circumferential splits or cracks, but may have a maximum of three radial splits or cracks provided that the splits or cracks are separated by at least 90° and do not extend beyond the coiled or flared area of the terminal (Figure 8-1) (Requirement).

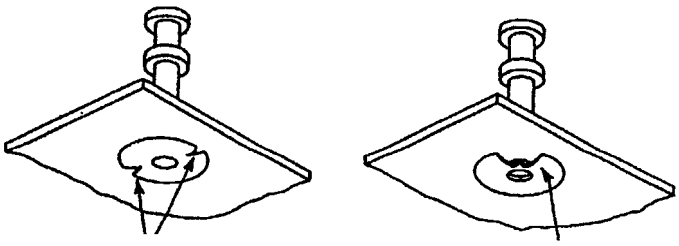

ACCEPTABLE **NOT ACCEPTABLE**

Figure 8-1. Terminal Damage

8.2.2 Swage type terminals in non-PTH's, designed to have the terminal shoulder soldered to the printed wiring conductor, shall be secured to the PWB by a roll swage (Figure 8-2).

Provided by IHS
No reproduction or networking permitted without license from IHS
Licensee=NASA Technical Standards 4/9972545004, User=Garcia, Jaime
Not for Resale, 11/08/2010 15:56:56 MST

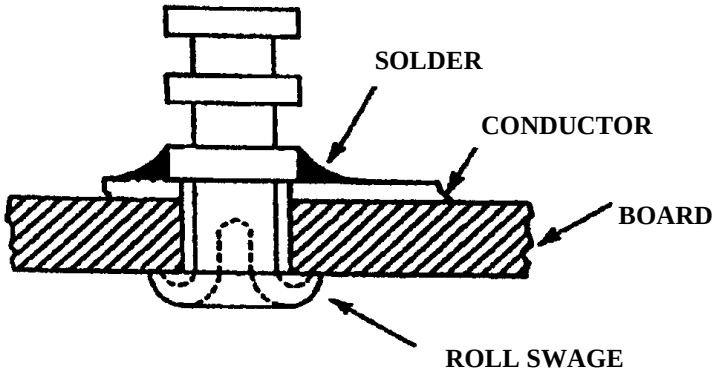

Figure 8-2. Roll Flange Terminal

8.2.3 PWB designs calling for soldering of the swaged end of the terminal to the printed wiring conductor on a single-sided PWB shall have the terminal secured with a V-funnel swage (refer to Figure 8-3) (Requirement).

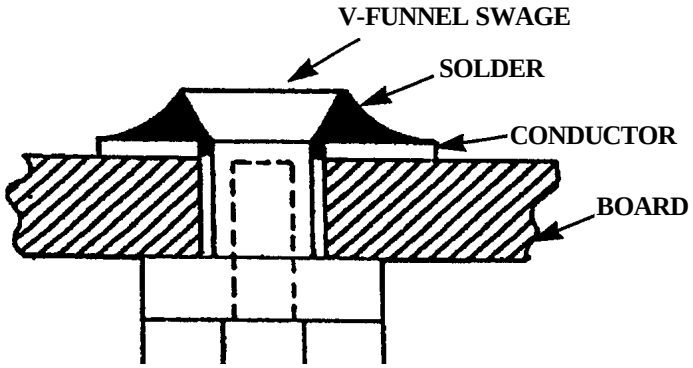

Figure 8-3. V-Funnel Type Swage

8.2.4 Swage type terminals that are mounted in a PTH shall be secured to the PWB by a V-funnel swage (Figure 8-3) or an elliptical funnel (Figure 8-4) swage (Requirement). The elliptical funnel swage is the preferred method for attachment. Terminals shall be swaged such that they can be rotated under finger force (Requirement).

Provided by IHS
No reproduction or networking permitted without license from IHS
Licensee=NASA Technical Standards 4/9972545004, User=Garcia, Jaime
Not for Resale, 11/08/2010 15:56:56 MST

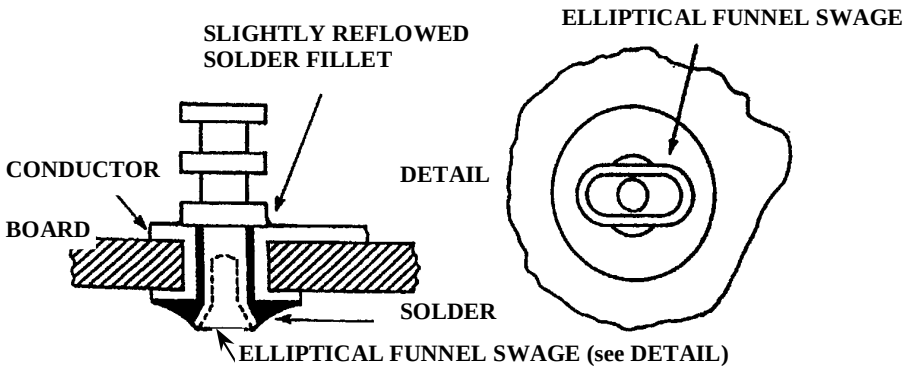

Figure 8-4. Elliptical Funnel Type Swage

8.3 Mounting of Parts to Terminals

8.3.1 Parallel Mounting. Parts shall be mounted parallel to, and in contact with, their mounting surface. Slight angularity is permissible (Requirement).

8.3.2 Lead Lengths. The length of leads between parts and terminals should be approximately equal at both ends, except when special part shapes require staggering.

8.3.3 Stress Relief. Where parts are mounted between bifurcated terminals, without lead wrap, it is not mandatory that the part leads have stress relief bends. Where parts are mounted between other terminal types, it is mandatory to put a stress relief bend in at least one lead (Figure 8-5).

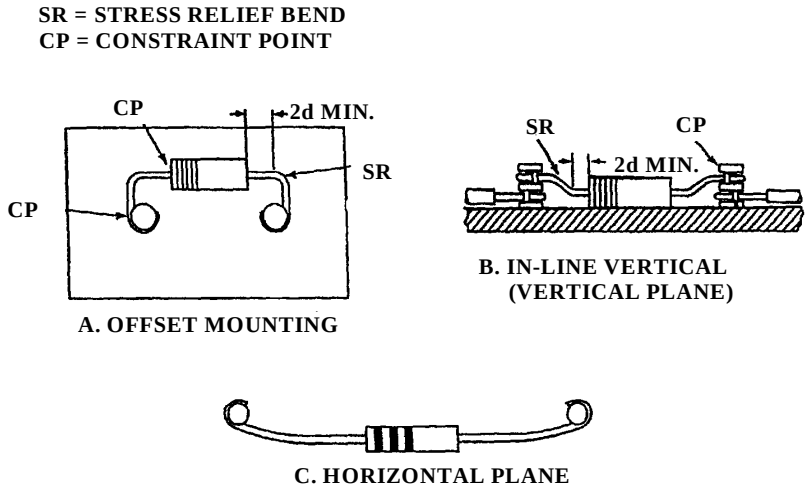

Figure 8-5. Stress Relief Examples

CAUTION:	***CARE SHALL BE EXERCISED TO ASSURE THAT SWAGED SOLDER CONNECTIONS ARE NOT MECHANICALLY STRESSED DURING PART MOUNTING OPERATIONS.***

Provided by IHS
No reproduction or networking permitted without license from IHS
Licensee=NASA Technical Standards 4/9972545004, User=Garcia, Jaime
Not for Resale, 11/08/2010 15:56:56 MST

8.3.4 Wrapping and Routing. Degrees of wrap and routing are specified in Chapter 9.

8.4 Mounting of Parts to PWB'S

8.4.1 Parts Mounted To PWB's. Solder terminations shall be visible for inspection after soldering (Requirement). In the cases where visual inspection cannot be accomplished, a nondestructive method of inspection shall be performed (e.g., X-ray or fiberscope). The nondestructive method of inspection to be used shall be documented and approved by the procuring NASA Center prior to use (Requirement). Recommended terminations and mounting techniques are shown throughout this chapter.

8.4.2 Axial Lead Mounting. Axial leaded parts shall be mounted as follows:

a. Horizontal Mount. Parts intended for horizontal mounting shall be parallel to, and in contact with, the mounting surface (see Figure 8-6), or as specified in the engineering documentation. Slight angularity is permissible (Requirement). When parts will be bonded, slight spacing will be acceptable.

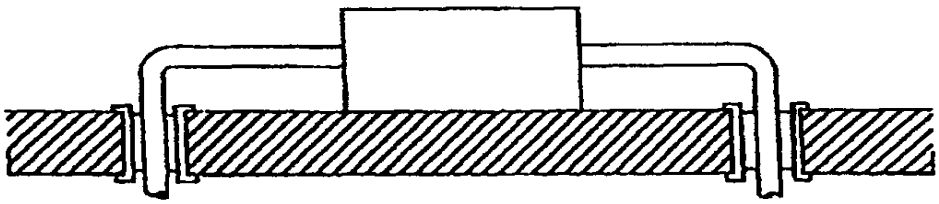

Figure 8-6. Horizontal Mount

b. Vertical Mount.

(1) Plated-Through Hole. The end of the part body must be mounted with at least 0.5mm (0.020 inch) to a maximum of 1.27mm (0.050 inches) clearance above the PWB surface or as specified on engineering documentation. The end of the part is defined to include any extensions such as coating meniscus, solder seal, or weld bead (see Figure 8-7A).

(2) Non-Plated-Through Hole. The end of the part body may be mounted flush with the PWB surface and shall be terminated with an off-the-pad-lap solder joint (Requirement). The part shall be staked on the part side of the PWB (Requirement). The opposite lead shall have two approximate right angle bends (see Figure 8-7B) (Requirement).

Provided by IHS
No reproduction or networking permitted without license from IHS
Licensee=NASA Technical Standards 4/9972545004, User=Garcia, Jaime
Not for Resale, 11/08/2010 15:56:56 MST

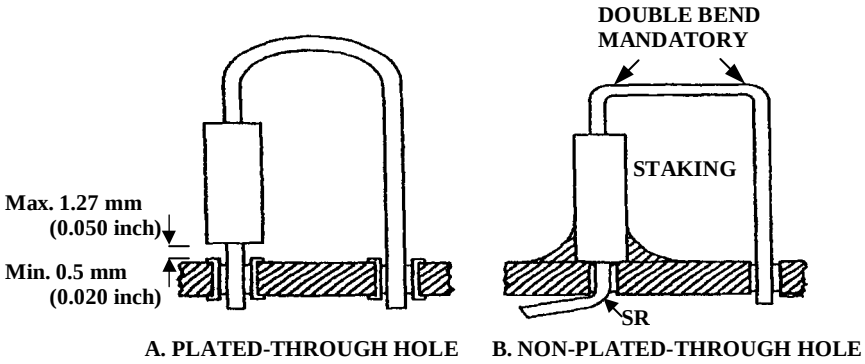

Figure 8-7. Vertical Mount

8.4.3 Radial Lead Mounting. Plated-through-hole: The part body shall be mounted with at least 0.5mm (0.020 inch) to a maximum of 1.27mm (0.050 inch) and shall allow inspection of the solder joint (Requirement). The part body includes any extension such as coating meniscus, solder seal or weld bead (see Figure 8-8A). Non-plated-through-hole: The part body may be mounted flush with the PWB surface and terminated with an off-the-pad lap solder joint (See Figure 8-8B).

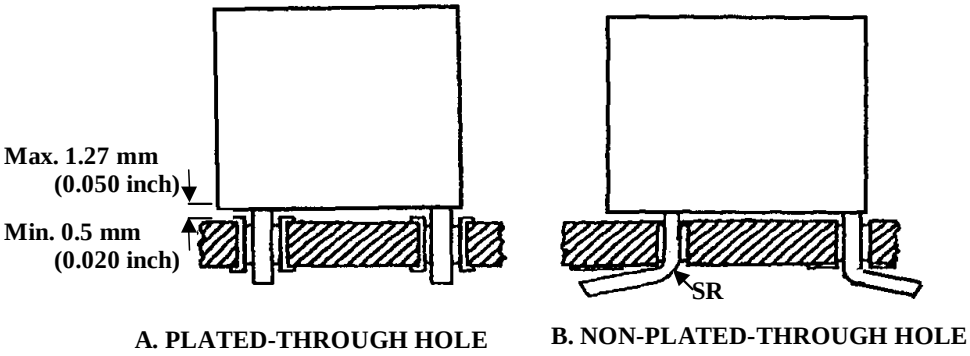

Figure 8-8. Radial Leaded Parts

8.4.4 Hole Obstruction. Parts shall not be mounted such that they obstruct solder flow or prevent cleaning of the topside termination areas of PTH's (Figure 8-9) (Requirement).

Provided by IHS
No reproduction or networking permitted without license from IHS
Licensee=NASA Technical Standards 4/9972545004, User=Garcia, Jaime
Not for Resale, 11/08/2010 15:56:56 MST

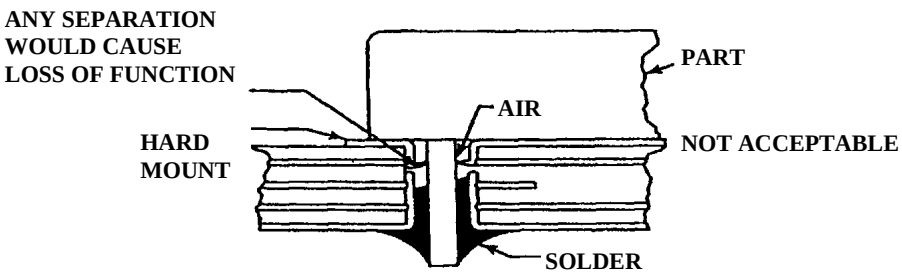

Figure 8-9. Hole Obstruction

8.4.5 Parts with Leads Terminating on Opposite Sides. Stress relief shall be provided in the part lead between the part body and solder terminations (Figure 8-10) (Requirement). The lead may be terminated by clinch, straight-through, or lap configuration.

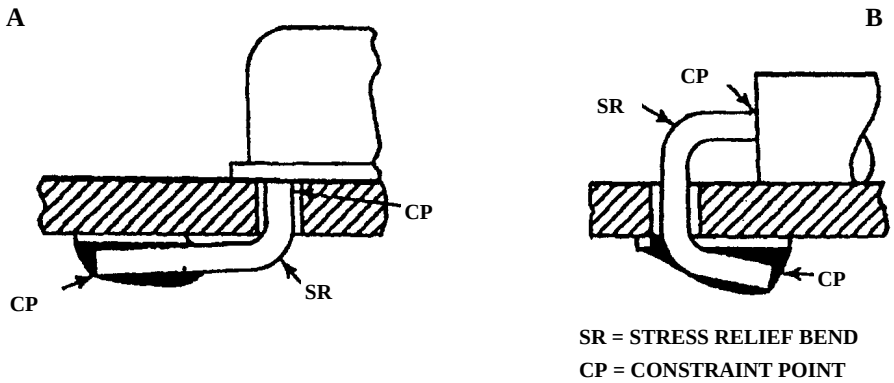

Figure 8-10. Stress Relief Part Termination

8.4.6 Parts with Leads Terminating on the Same Side. Stress relief shall be provided by forming the part leads at a bend angle to the PWB of not more than 95°nor less than 45° (Figure 8-11) (Requirement).

Figure 8-11. Bend Angle

8.4.7 Conductors Terminating on Both Sides. Stress relief shall always be provided in the part lead between the part body and solder termination (Requirement). When a conductor is used to

Provided by IHS
No reproduction or networking permitted without license from IHS
Licensee=NASA Technical Standards 4/9972545004, User=Garcia, Jaime
Not for Resale, 11/08/2010 15:56:56 MST

interconnect opposite sides of a PWB, stress relief or a PTH shall be provided (Figure 8-12) (Requirement).

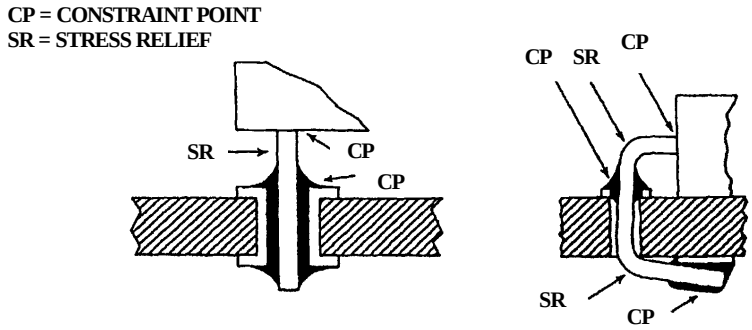

Figure 8-12. Conductors Terminating on Both Sides

8.5 Boards Lead Terminations, Printed Wiring

8.5.1 Part Lead Terminations. Part leads shall be of the lap, clinched, or straight-through configuration as defined by the engineering documentation and shall be terminated in accordance with paragraphs 8.4-1 through 8.4-3 (Requirement). No more than one item, whether conductor or part lead, shall be inserted in any one hole (Requirement).

a. Lapped Terminations. Lapped terminations consist of both round and flat ribbon leads. It is preferred that leads be seated in contact with the termination area for the full length of the foot. Separation between the foot of the lead and the surface of the termination area shall not exceed 0.25mm (0.010 inches) (see Figure 8-13) (Requirement).

Provided by IHS
No reproduction or networking permitted without license from IHS
Licensee=NASA Technical Standards 4/9972545004, User=Garcia, Jaime
Not for Resale, 11/08/2010 15:56:56 MST

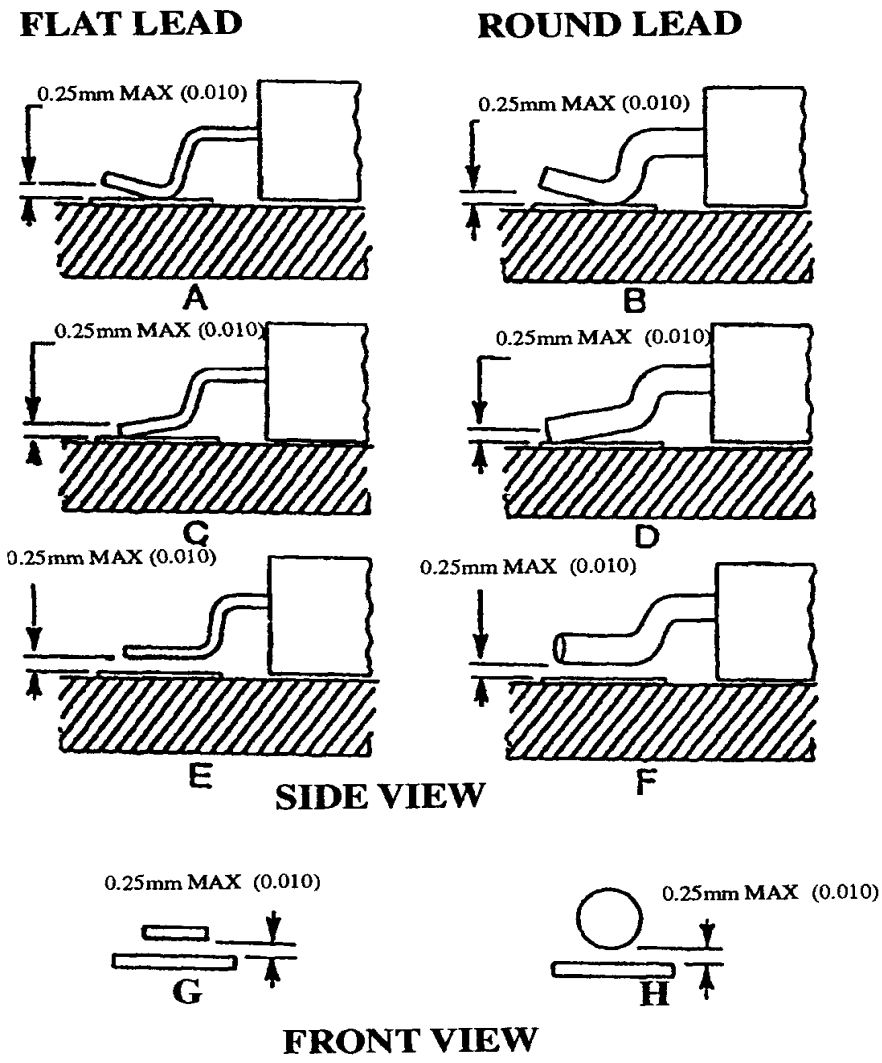

Figure 8-13. Lapped Lead Height above Board

b. Lapped Round Leads. The round lead shall overlap the solder pad a minimum of 3.5 times the lead diameter to a maximum of 5.5 times the lead diameter, but in no case shall the length be less than 1.27mm (0.050 inch) (Requirement). The cut-off end of the lead shall be no closer than ½ the lead diameter to the edge of the solder pad (Requirement). Only that portion of the lead extending to the part body or to another soldered connection shall be beyond the solder pad (Figure 8-14A). For lapped terminations where the part body is on the same side of the PWB as the termination area, a heel fillet is mandatory (Figure 8-14B).

Provided by IHS
No reproduction or networking permitted without license from IHS
Licensee=NASA Technical Standards 4/9972545004, User=Garcia, Jaime
Not for Resale, 11/08/2010 15:56:56 MST

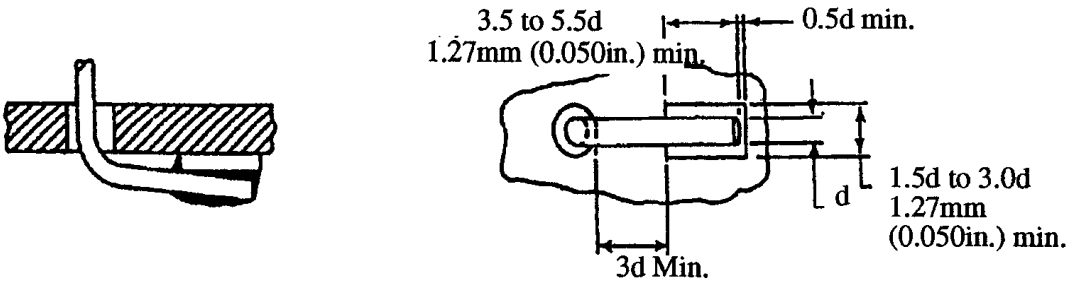

A. SINGLE SURFACE LAPPED TERMINATION

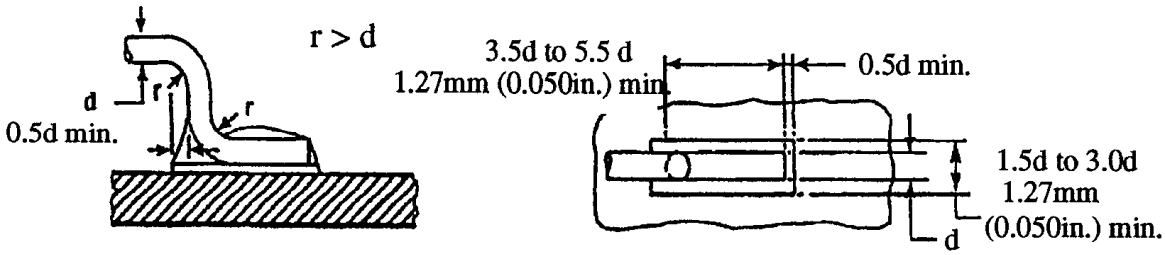

B. SINGLE SURFACE LAPPED TERMINATION

Figure 8-14. Lapped Round Termination

c. Lapped Ribbon Leads. The ribbon lead shall overlap the solder pad a minimum of 3 lead widths to a maximum of 5.5 lead widths (Requirement). Only that portion of the lead extending to the part body or to another soldered connection shall be beyond the pad. The cut-off end of the lead shall be a minimum of 0.25mm (0.010 inch) from the end of the pad (Requirement). One edge of the lead may be flush with the edge of the solder pad. There shall be sufficient area around two of the three lead edges to accommodate solder filleting (see Figure 8-15) (Requirement). In instances where ribbon leads are less than 0.5mm (0.020 inch) in width, ribbon overlap shall be no less than 1.27mm (0.050 inch) (Requirement). For lapped terminations where the part body is on the same side of the PWB as the termination area, a heel fillet is mandatory (Figure 8-15).

Provided by IHS
No reproduction or networking permitted without license from IHS
Licensee=NASA Technical Standards 4/9972545004, User=Garcia, Jaime
Not for Resale, 11/08/2010 15:56:56 MST

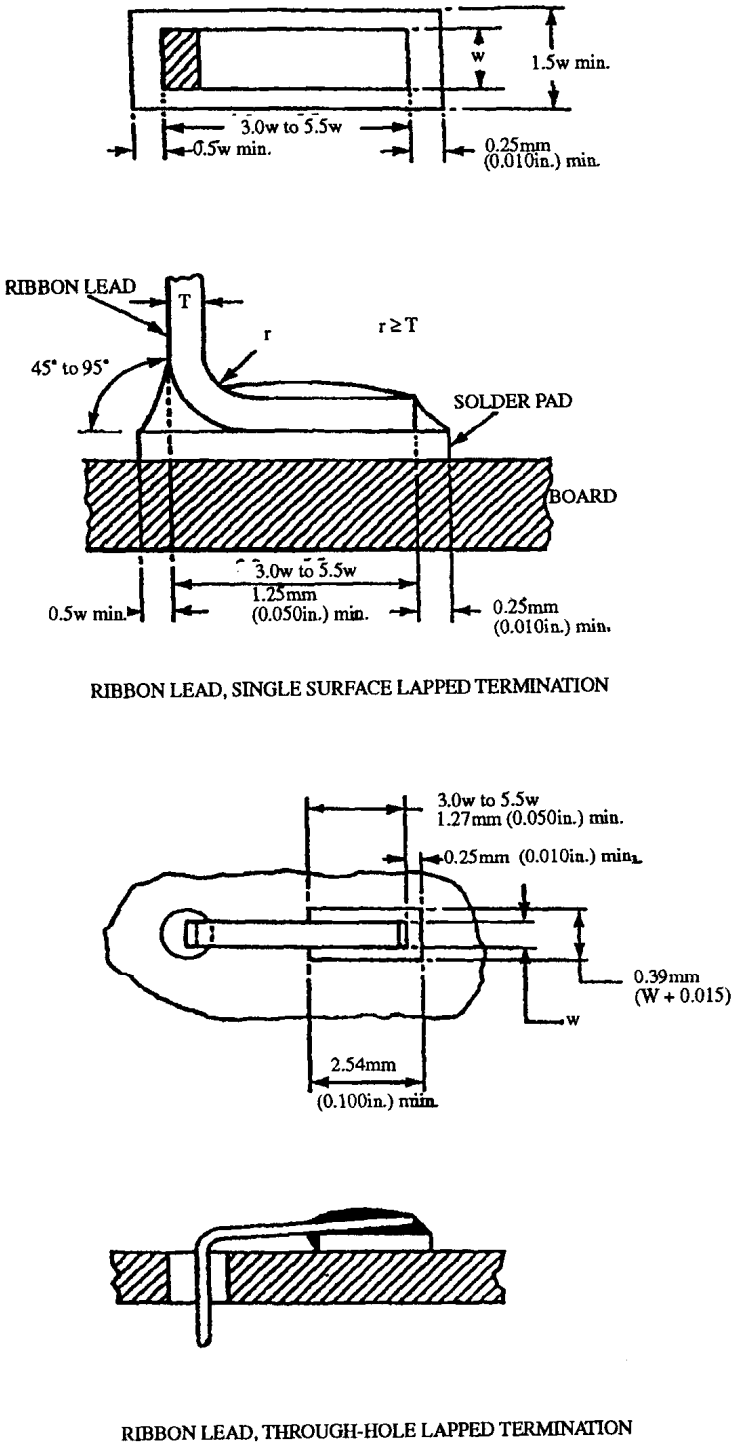

Figure 8-15. Lapped Ribbon Leads

8.5.2 Clinched Lead Terminations. The length of the clinched portion of conductors and part leads shall be at least ½ the largest dimension of the solder pad or 0.78mm (0.031 inch), whichever is greater (Requirement). Lead overhang shall not violate minimum electrical spacing requirements (Requirement). The lead shall be bent in the direction of the longest dimension of

Provided by IHS
No reproduction or networking permitted without license from IHS
Licensee=NASA Technical Standards 4/9972545004, User=Garcia, Jaime
Not for Resale, 11/08/2010 15:56:56 MST

the solder pad (Requirement). If the pad dimensions are not sufficient, the lead shall be bent in the direction of the printed wire path (Figure 8-16) (Requirement). There shall be sufficient solder pad area extending beyond the sides of the lead to accommodate solder filleting (Requirement). Fully clinched leads are defined as leads bent between 75°and 90° from a vertical line perpendicular to the PWB (Figure 8-17). Nonbendable leads shall not be clinched (Requirement).

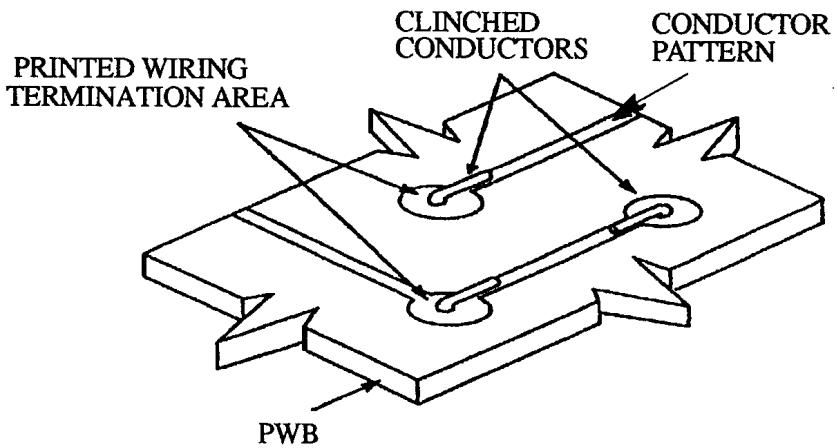

Figure 8-16. Clinched Termination

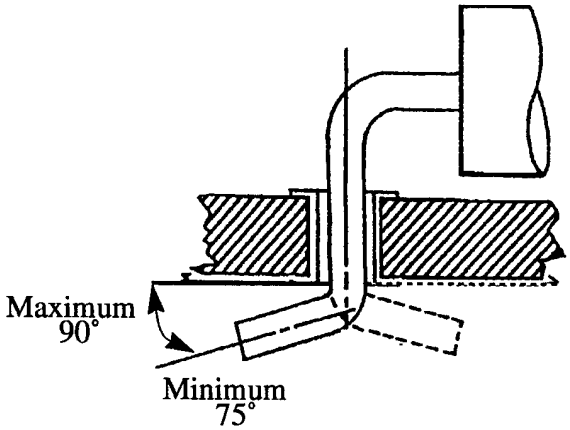

Figure 8-17. Lead Bend

8.5.3 Straight-Through Lead Terminations. Part leads terminated straight through the PWB shall extend a minimum of 0.5mm (0.020 inch) and a maximum of 2.29mm (0.090 inch) (Figure 8-18) (Requirement). The minimum lead length shall be determined prior to soldering (actual measurement is not required except for referee purposes) (Requirement). Straight-through leads may be bent up to 30° from a vertical plane to retain parts during the soldering operation (Figure 8-19). Nonbendable leads shall not be bent (Requirement).

Provided by IHS
No reproduction or networking permitted without license from IHS
Licensee=NASA Technical Standards 4/9972545004, User=Garcia, Jaime
Not for Resale, 11/08/2010 15:56:56 MST

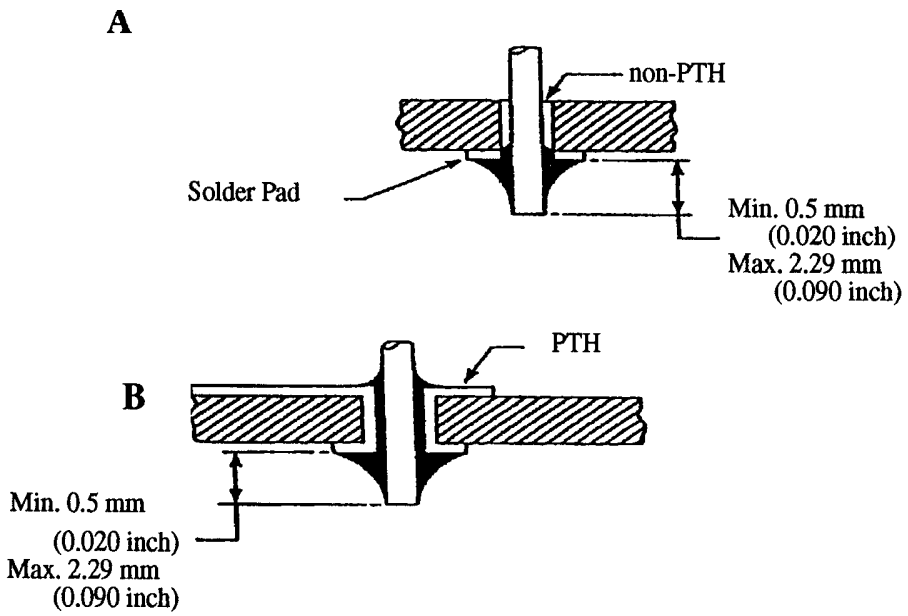

Figure 8-18. Straight-Through Termination

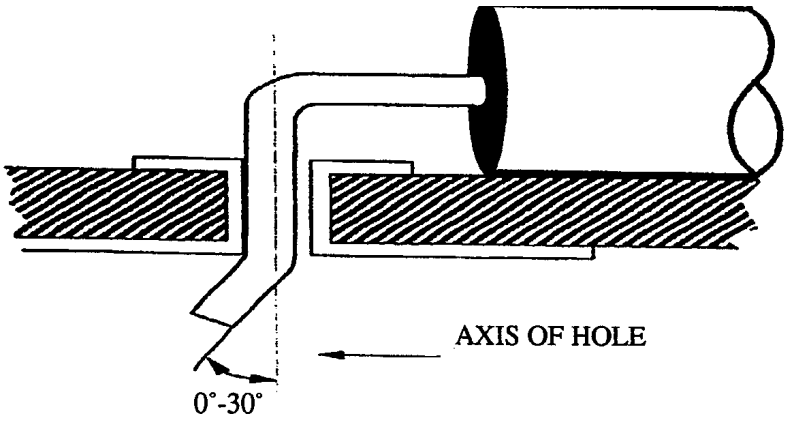

Figure 8-19. Straight-Through Lead Retention

Provided by IHS
No reproduction or networking permitted without license from IHS
Licensee=NASA Technical Standards 4/9972545004, User=Garcia, Jaime
Not for Resale, 11/08/2010 15:56:56 MST

9. ATTACHMENT OF CONDUCTORS TO TERMINALS

9.1 General

9.1.1 Minimum Insulation Clearance. The insulation shall not be imbedded in the solder joint (Requirement). The contour of the conductor shall not be obscured at the termination end of the insulation (Requirement).

9.1.2 Maximum Insulation Clearance. The insulation clearance shall be less than two wire diameters, including insulation, but in no case shall permit shorting between adjacent conductors (Requirement). Insulation clearance shall be referenced from the first point of contact of the conductor to the terminal (Requirement).

9.1.3 Multiple Parallel Entry. For multiple parallel entry of conductors to a terminal, insulation clearances need not be equal.

9.1.4 Variations. When characteristic impedance or other circuit parameters are affected, as in high-voltage circuits or coaxial line terminations, the insulation clearance requirements may be modified. All variations shall be documented (Requirement).

9.1.5 Breakouts from Wire Bundles. For multiple conductors routed from a common wire bundle to equally spaced soldered terminals, the length of the conductor ends, including bend allowance, shall be uniform to prevent stress concentration on any one conductor (Requirement).

9.1.6 Mechanical Support. Wire bundles shall be supported so that the solder connections are not subjected to mechanical loads (Requirement). The methods, means, and location of this support shall be specified on the design engineering documentation (Requirement).

9.1.7 Stress Relief. Conductors shall be provided with sufficient slack to preclude tension on the solder termination or conductor (Requirement).

9.1.8 Wrap Orientation. Conductors may be wrapped clockwise or counterclockwise on the terminal and shall continue the curvature of the dress (Requirement). The conductor shall not interfere with the wrapping of other conductors on the terminal (Requirement). The curvature of the dress shall not exceed 20° from a perpendicular line from the last point of contact between the conductor and terminal (Figure 9-1) (Requirement).

Provided by IHS
No reproduction or networking permitted without license from IHS
Licensee=NASA Technical Standards 4/9972545004, User=Garcia, Jaime
Not for Resale, 11/08/2010 15:56:56 MST

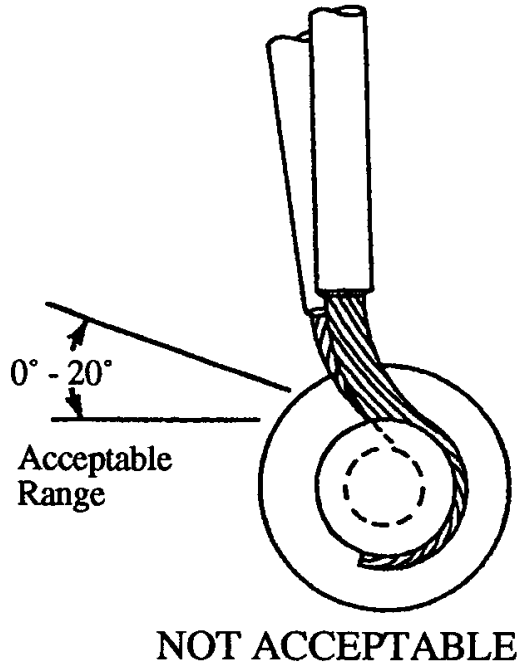

Figure 9-1. Wrap Orientation

9.1.9 Terminal Fill. Conductors and part leads shall be in full contact with the terminal (Requirement). They shall not be wrapped onto each other or extend beyond the top of the terminal (Requirement).

9.1.10 Part Leads. Part leads shall not be used as terminals unless the part is designed for the lead to function as a terminal (Requirement).

9.1.11 Mounting of Parts to Terminals. The mounting of parts shall comply with the requirements of paragraph 8.3 and this chapter (Requirement).

9.1.12 Terminals. Hot dipped, tin-lead coated or hot reflowed, electrodeposited tin-lead solder terminals shall be used (Requirement). Terminals with uneven or excessive coatings on their mounting surfaces shall not be used as they may loosen in subsequent soldering operations (Requirement). Terminals shall be of proper size to accommodate the conductors (Requirement). Terminals and conductors shall not be modified except for high voltage applications (Requirement).

9.1.13 High-Voltage Lead Wrap. High-voltage lead wraps shall be defined on the engineering documentation (Requirement).

9.2 Turret and Straight Pin Terminals

9.2.1 Side Route. The side route shall be connected as follows:

a. Conductor sizes larger than American Wire Gage (AWG) 26 shall be wrapped a minimum of 1/2 (180°) to a maximum of 3/4 turn (270°) around the post (see Figure 9-2A) (Requirement).

Provided by IHS
No reproduction or networking permitted without license from IHS
Licensee=NASA Technical Standards 4/9972545004, User=Garcia, Jaime
Not for Resale, 11/08/2010 15:56:56 MST

b. Conductor sizes AWG 26 and smaller shall be wrapped a minimum of 1/2 turn (180°) but less than one full turn (360°) around the post (see Figure 9-2B) (Requirement).

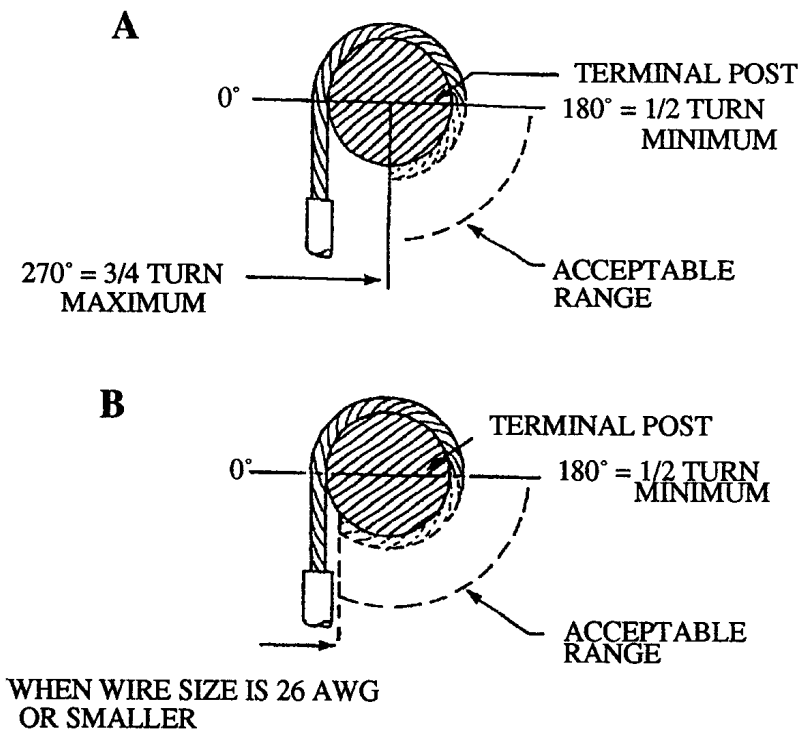

Figure 9-2. Conductor Wrap

c. For turret terminals, all conductors shall be confined to the guide slots (see Figure 9-3A) (Requirement).

d. Conductors shall be maintained in contact with the post for the full curvature of the wrap and the conductor ends shall not extend beyond the base of the terminal (Requirement).

e. More than one conductor may be installed in a single slot of sufficient height, provided each conductor is wrapped on the terminal post and not on another conductor.

9.2.2 Bottom Route. The conductor shall enter the terminal from the bottom, be brought through the side slot at the top, and wrapped as required for side route (Figure 9-3B) (Requirement).

Provided by IHS
No reproduction or networking permitted without license from IHS
Licensee=NASA Technical Standards 4/9972545004, User=Garcia, Jaime
Not for Resale, 11/08/2010 15:56:56 MST

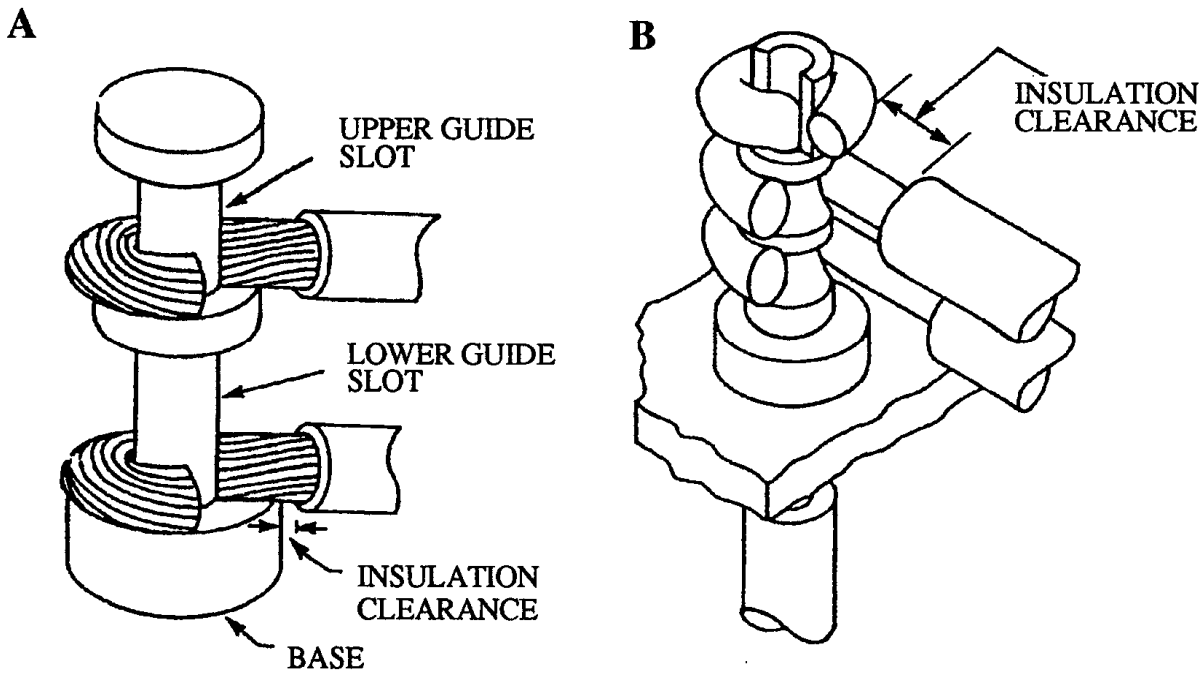

Figure 9-3. Turret Terminal

9.2.3 Continuous Run Wrapping. If three or more terminals in a row are to be connected, a solid bus wire jumper may be continued from terminal to terminal as shown in Figure 9-4. The wrap to the first and last terminal of the series shall conform to paragraph 9.2-1A or paragraph 9.2-1B depending on the conductor size (Requirement).

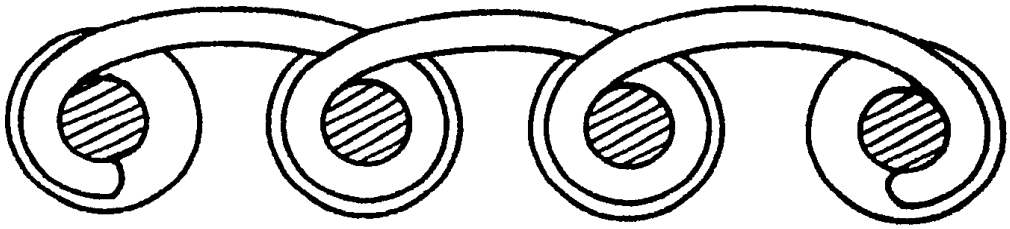

Figure 9-4. Continuous Run Wrapping--Turret Terminals

9.3 Bifurcated Terminals

9.3.1 Bottom Route. Bottom route shall be connected as shown in Figure 9-5 (Requirement). Conductors shall not extend beyond the diameter of the base of the terminal except where physical clearance is adequate for the intended environment or electrical characteristics (Requirement). When more than one conductor is to be attached, it shall be inserted at the same time but shall be wrapped separately around alternate posts (Requirement).

Provided by IHS
No reproduction or networking permitted without license from IHS
Licensee=NASA Technical Standards 4/9972545004, User=Garcia, Jaime
Not for Resale, 11/08/2010 15:56:56 MST

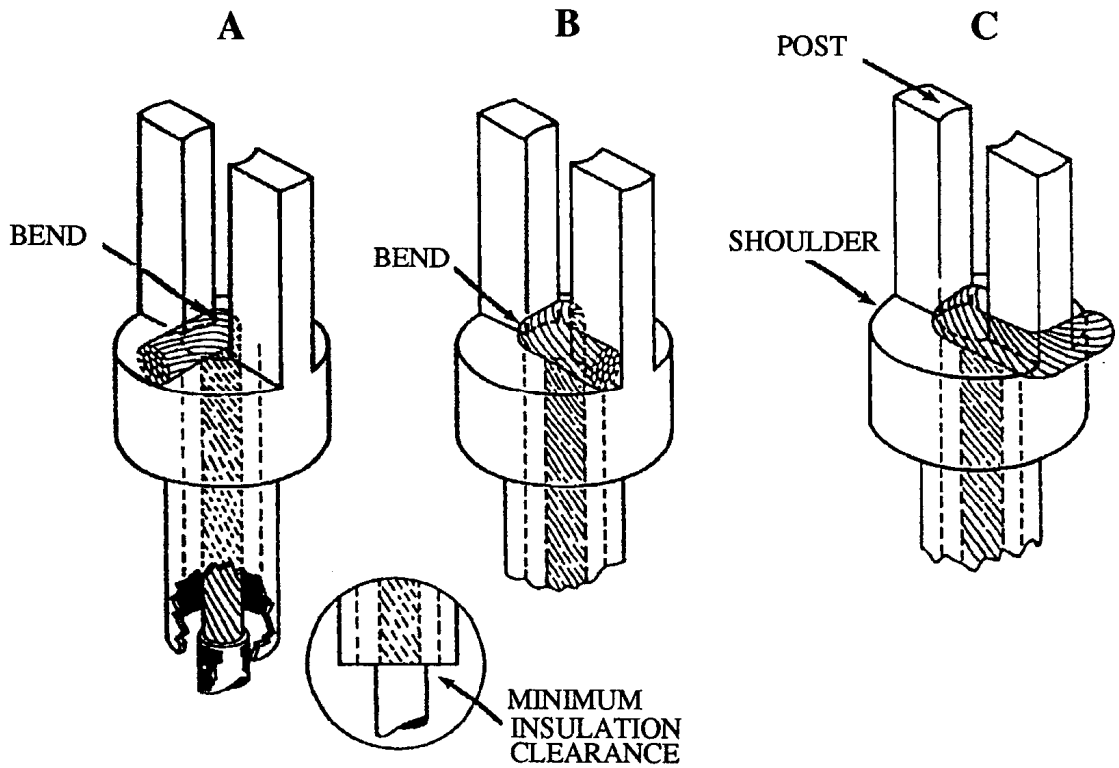

Figure 9-5. Bottom Route Connections to Bifurcated Terminals

9.3.2 Side Route. Side route shall be connected as follows (Figure 9-6):

a. The conductor shall enter the mounting slot perpendicular to the posts (Requirement).

b. A conductor may lay straight through a terminal slot provided the conductor surface remains in contact with the terminal surface (Figure 9-6A). Where conductors are wrapped on a terminal post, they shall wrap a minimum of 90° and a maximum of 180° (1/4 to 1/2 turn); refer to Figure 9-7 (Requirement).

c. More than one conductor may be installed on a single post provided each conductor is wrapped on the terminal post and not on another conductor.

d. When more than one conductor is connected to a terminal, the direction of bend of each additional conductor shall alternate (Figures 9-6B and D) (Requirement).

e. Conductors shall not extend beyond the diameter of the base of the terminal except where physical clearance will not adversely affect environmental or electrical characteristics (Requirement).

9.3.3 Side and Bottom Route. The bottom route shall be installed first as shown in Figure 9-5, then the side route as shown in Figure 9-6, methods B, C, or D (Requirement).

Provided by IHS
No reproduction or networking permitted without license from IHS
Licensee=NASA Technical Standards 4/9972545004, User=Garcia, Jaime
Not for Resale, 11/08/2010 15:56:56 MST

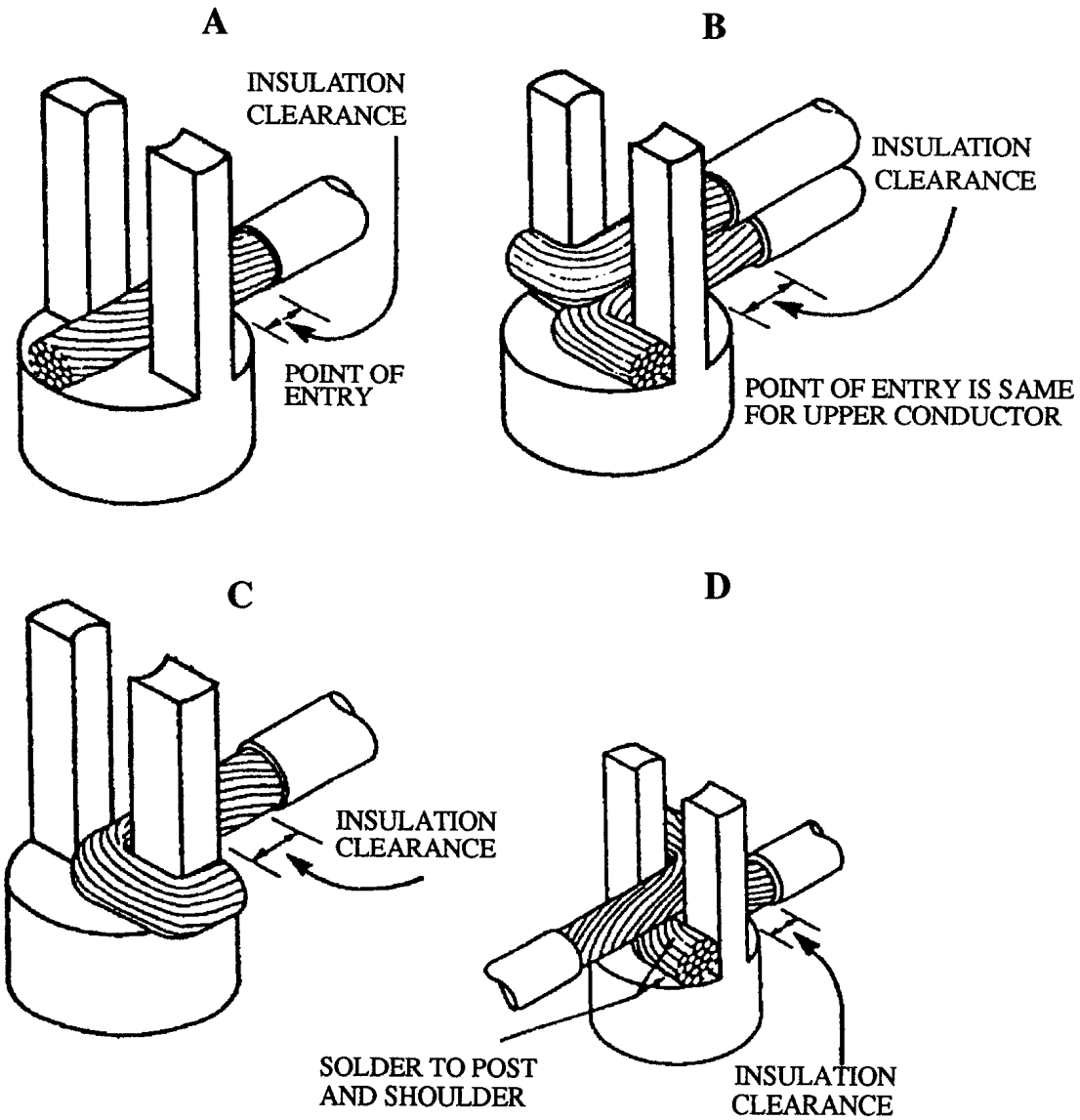

Figure 9-6. Side Route Connections to Bifurcated Terminals

Provided by IHS
No reproduction or networking permitted without license from IHS

Licensee=NASA Technical Standards 4/9972545004, User=Garcia, Jaime
Not for Resale, 11/08/2010 15:56:56 MST

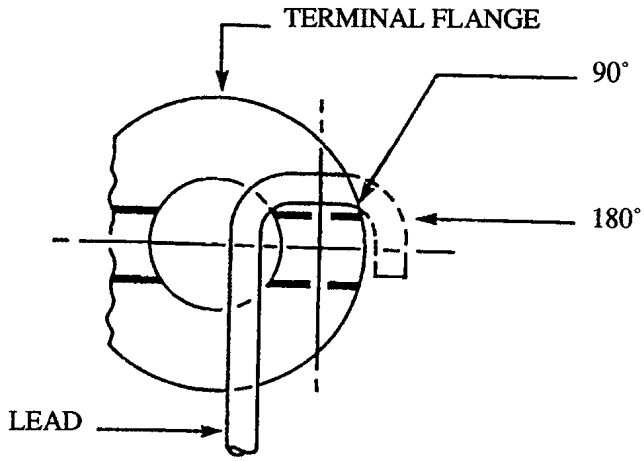

Figure 9-7. Lead Wrap

9.3.4 Continuous Run Connections. When a series of terminals are to be connected to each other, such interconnections shall be made with a solid wire in accordance with Figure 9-8 or Figure 9-9. The wire shall be attached to the first and last terminal in accordance with paragraph 9.3-2 (Requirement).

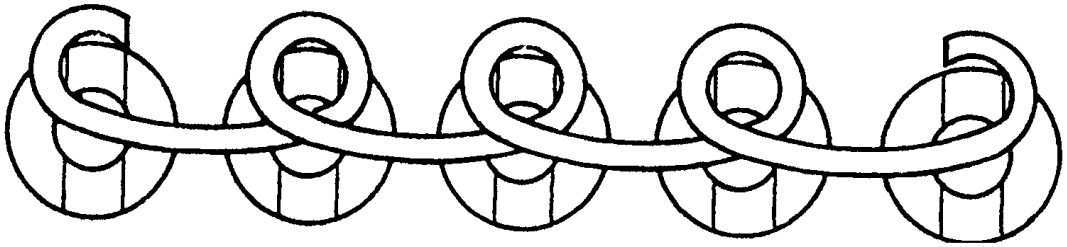

Figure 9-8. Continuous Run Wrapping--Bifurcated Terminals

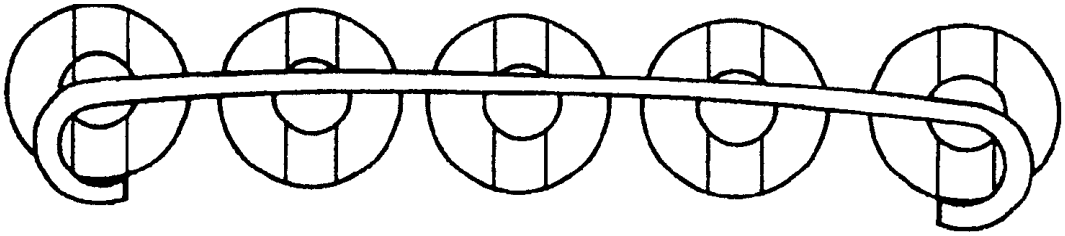

Figure 9-9. Continuous Run Wrapping--Bifurcated Terminals Alternate Procedure

9.4 Hook Terminals

Connections to hook terminals shall be as shown in Figure 9-10 (Requirement). The bend to attach conductors to hook terminals shall be a minimum of 1/2 turn (180°) to a maximum of 3/4 turn (270°) (Requirement). Protrusion of the conductor ends shall be controlled to avoid damage to the insulation sleeving (Requirement). Conductors shall be wrapped directly to the terminal and not on other conductors (Requirement). When more than one conductor is connected to the

Provided by IHS
No reproduction or networking permitted without license from IHS
Licensee=NASA Technical Standards 4/9972545004, User=Garcia, Jaime
Not for Resale, 11/08/2010 15:56:56 MST

terminal, the direction of the bend of each additional conductor shall alternate (Figure 9-10) (Requirement).

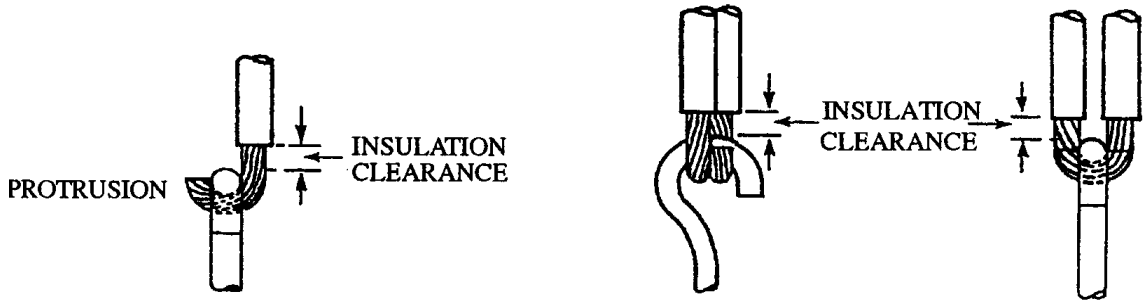

Figure 9-10. Connections to Hook Terminals

9.5 Pierced Terminals

Connections to pierced terminals shall be as shown in Figure 9-11 (Requirement). The bend to attach conductors to pierced terminals shall be a minimum of 1/4 turn (90°) to a maximum of 1/2 turn (180°) (Requirement). Protrusion of conductor ends shall be controlled to avoid damage to insulation sleeving (Requirement).

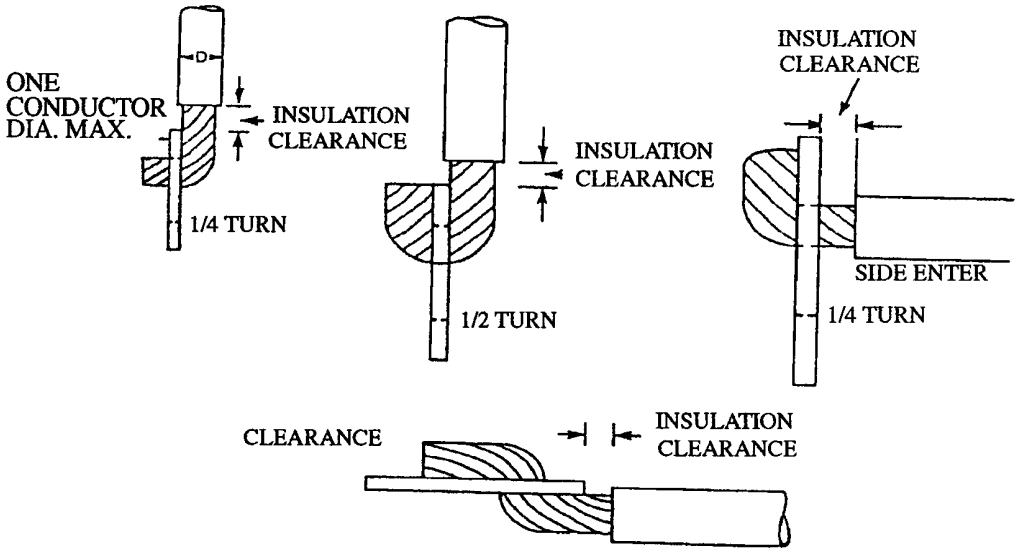

Figure 9-11. Connections to Pierced Terminals

9.6 Solder Cups (Connector Type)

Conductors shall enter the solder cup as shown in Figure 9-12 (Requirement). Conductors shall be bottomed in the cup and shall be in contact with the inner wall of the cup (Requirement). The maximum number of conductors shall be limited to those that can be in contact with the full height of the inner wall of the cup (Requirement).

Provided by IHS
No reproduction or networking permitted without license from IHS
Licensee=NASA Technical Standards 4/9972545004, User=Garcia, Jaime
Not for Resale, 11/08/2010 15:56:56 MST

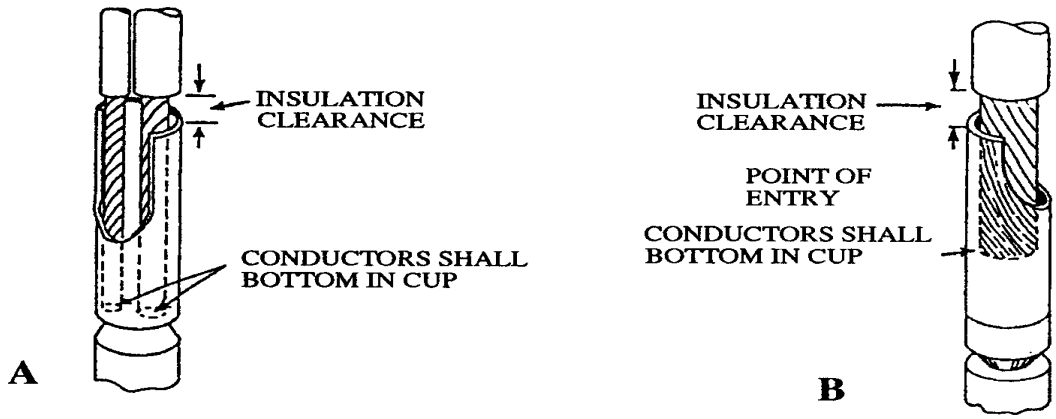

Figure 9-12. Connections to Solder Cups (Connector Type)

9.7 Solder Cups (Swaged Type)

Connections shall be as shown in Figure 9-13 (Requirement). Conductors entering from the top shall be in contact with the inner wall of the cup and shall bottom in the cup or on the bottom conductor (Requirement).

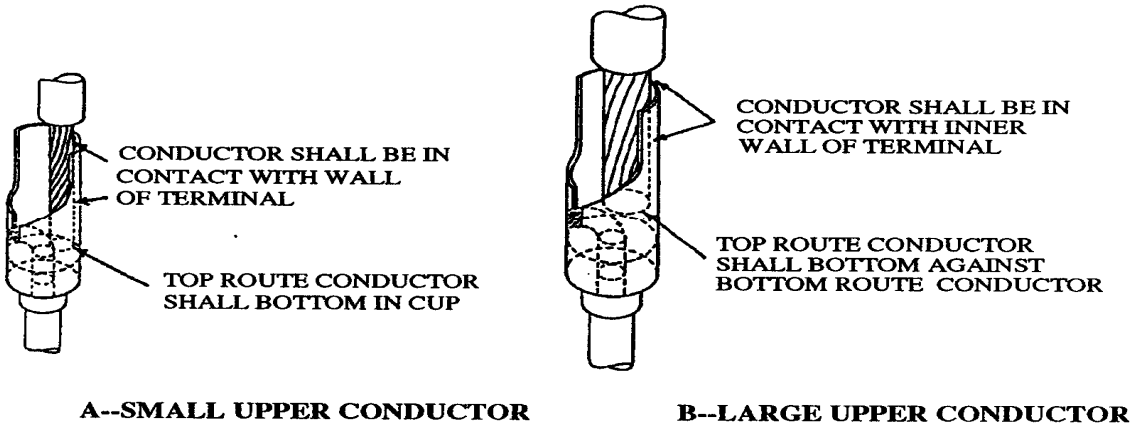

Figure 9-13. Connections to Swaged Type Solder Cup

9.8 Insulation Sleeving Application

All joints required to be covered by insulation sleeving shall be inspected prior to and after sleeving (Requirement). Heat shrinkable insulation sleeving shall be used for electrical insulation, as appropriate (Requirement). Where a part covered by insulating sleeving requires mechanical support, measures shall be taken to ensure that the part is not free to move within the sleeving (Requirement). Material selection shall be specified on the engineering documentation. Sleeving shall not be pierced, split, charred, or otherwise damaged (Requirement).

CAUTION:	***EXTREME CARE SHALL BE TAKEN TO PREVENT DAMAGE TO THE ASSEMBLY DUE TO EXCESSIVE HEAT WHILE SHRINKING THE SLEEVING.***

Provided by IHS
No reproduction or networking permitted without license from IHS
Licensee=NASA Technical Standards 4/9972545004, User=Garcia, Jaime
Not for Resale, 11/08/2010 15:56:56 MST

10. SOLDERING TO TERMINALS

10.1 General

10.1.1 Securing Conductors. There shall be no motion between conductors and the terminal during soldering or while the solder is solidifying (Requirement).

10.1.2 Thermal Shunts. Thermal shunts shall be used where heat during the soldering operations may degrade conductors, insulation, parts, or previously soldered connections.

10.1.3 Inspection. The criteria for inspection can be found in Chapter 13.

10.1.4 Cooling. Pressurized air shall not be used to cool solder joints (Requirement). Connections shall be cooled at room temperature only.

10.2 Solder Application

10.2.1 Solder Coverage. The molten solder shall flow around the conductor and over the termination area (Requirement). Solder quantity and filleting shall be as shown in Appendix A except for high voltage connections (Requirement).

10.2.2 Terminals. A fillet of solder shall be formed between the terminal and each side of the conductor except for cup terminals (Requirement).

10.2.3 Cup Terminals:

a. The solder shall form a fillet between the conductor and the cup entry slot (Requirement). The fillet shall follow the contour of the cup opening within the limits illustrated in Appendix A (Requirement).

b. Solder along the outside surface of the solder cup is permissible to the extent that it approximates tinning and does not interfere with the assembly or function of the connector.

10.2.4 Wicking. Flow (wicking) of solder along the conductor is permitted. Solder shall not make the presence of the individual wire strands indistinguishable (Requirement).

10.2.5 High Temperature Soldering. For soldering operations where terminals are to be subsequently reheated, the use of high temperature solder is permitted. The solder used shall conform to the requirements specified in paragraph 6.11-2 (Requirement).

10.3 High Voltage Terminations

High-voltage connections where corona suppression is necessary shall be as defined on the engineering documentation (Requirement). Where soldering of high voltage connections is required, all elements of the connection shall be covered by a smooth fillet and free of discontinuity or severe change in contour (see Figure 10-1) (Requirement).

Provided by IHS
No reproduction or networking permitted without license from IHS
Licensee=NASA Technical Standards 4/9972545004, User=Garcia, Jaime
Not for Resale, 11/08/2010 15:56:56 MST

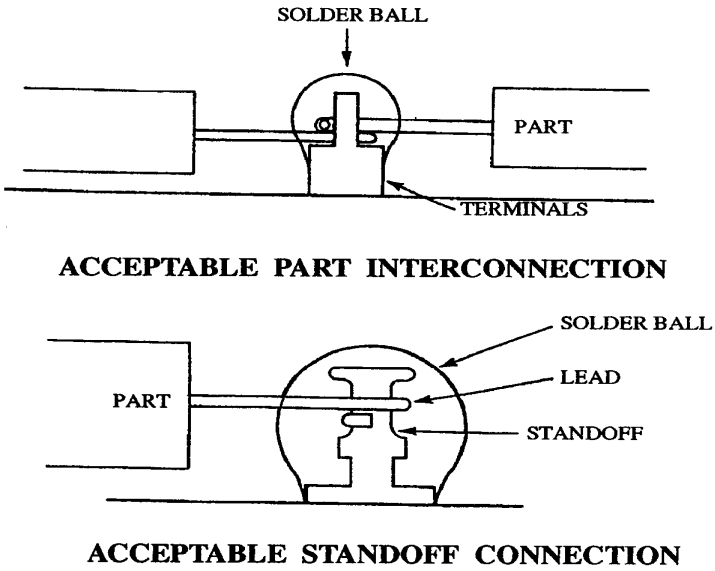

Figure 10-1 Solder-Ball Termination

10.4 Solder Cleaning

10.4.1 Interim Cleaning. Residues shall be removed during interim cleaning within 1/2 hour after soldering by applying an approved solvent as specified in paragraph 6.13 (Requirement). Solvents shall be applied in a manner that will minimize wicking of the solvent under conductor insulation and prevent its entry into the interior of parts (Requirement).

10.4.2 Final Cleaning. Mechanical means such as agitation or brushing may be used in conjunction with the solvents. The cleaning solvents and methods used shall have no deleterious affect on the parts, connections, or materials being cleaned (Requirement). Ultrasonic cleaning shall not be used for cleaning assemblies that contain electronic parts (Requirement). After cleaning, there shall be no visible evidence of flux residue or other contamination when examined (Requirement). PWA cleanliness shall be verified in accordance with Chapter 14 (Requirement).

10.4.3 Cleaning of Conformal Coated Assemblies. Conformal coated assemblies that require rework shall not be submerged in cleaning solvents (Requirement). Cleaning shall be limited to the area of rework (Requirement).

Provided by IHS
No reproduction or networking permitted without license from IHS
Licensee=NASA Technical Standards 4/9972545004, User=Garcia, Jaime
Not for Resale, 11/08/2010 15:56:56 MST

11. HAND SOLDERING OF PRINTED WIRING ASSEMBLIES

11.1 General

11.1.1 Securing Conductors. There shall be no relative motion between conductors, terminals, and PWB termination areas during solder application and solidification (Requirement). Conductors shall not be temporarily constrained against spring-back force during solder solidification that may produce residual stress in the joint (Requirement).

11.1.2 Thermal Shunts. Thermal shunts shall be used when heat applied during the soldering operation may degrade conductors, insulation, parts, or previously soldered connections (Requirement).

11.1.3 Inspection. The criteria for inspection are listed in Chapter 13.

11.1.4 Dip Soldering. Dip soldering of PWA's is not permitted.

11.1.5 Pattern Repair. Repair of damaged or broken conductor patterns on PWB's is not permitted.

11.1.6 Solder Rework. Rework of soldered connections shall be performed in accordance with the soldering requirements of this Standard (Requirement).

11.1.7 Cooling. Pressurized air shall not be used to cool solder joints (Requirement). Connections shall be cooled at room temperature only (Requirement).

11.1.8 High-Voltage Connections. High-voltage connections where corona suppression is necessary shall be as defined on engineering documentation (Requirement). Where soldering of high voltage connections is required, all elements of the connection shall be covered by a smooth fillet and free of discontinuity or severe change in contour (Requirement).

11.2 Solder Application

11.2.1 Solder Coverage. The molten solder shall flow around the conductor and over the termination areas (Requirement). Solder quantity and filleting shall be as shown in Appendix A (Requirement).

11.2.2 Non-Plated Through Hole Soldering. Solder fillets shall be complete and as shown in Appendix A (Requirement).

11.2.3 Plated-Through Hole Soldering.

a. In soldering a conductor into a PTH, heat may be applied to either or both sides of the PTH, but solder shall only be applied to one side (all board types) (Requirement).

b. On the solder application side of the PTH, the quantity of solder shall meet all requirements established by this publication (Requirement).

Provided by IHS
No reproduction or networking permitted without license from IHS
Licensee=NASA Technical Standards 4/9972545004, User=Garcia, Jaime
Not for Resale, 11/08/2010 15:56:56 MST

c. For the connection on the PTH side opposite from the solder application, the solder quantity shall, as a minimum, exhibit flow-through and bonding of the lead or conductor to the solder pad; but not necessarily wetting out to or around the entire periphery of the solder pad (Requirement). A slight recessing or shrinkback of the solder into the PTH below the solder pad shall be acceptable, providing the solder has obviously wetted the lead and solder pad and the shrinkback is slight enough that it cannot be construed to be a solder void or blow hole (Requirement).

NOTE: ***When soldering pth's that have large ground plane attachments and/or large traces terminating at the path, special solder procedures may be required.***

11.2.4 Interfacial Connections.

a. Double-Sided PWB's. Functional PTH's on double-sided PWB's require the use of filler wire for support if the PWB coupon has not been evaluated by construction analysis. No dedicated effort need be expended to remove solder in unused holes.

b. Multilayer PWB's. Multilayer PWB PTH's used as vias do not require the use of filler wire nor shall they be solder filled (Requirement). No dedicated effort need be expended to remove solder in unused holes.

CAUTION: WHEN SOLDERING TO PTH's ON MULTILAYER PWB's, CARE SHOULD BE EXERCISED TO PREVENT HEAT DAMAGE TO THE PTH AND THE JUNCTION OF INTERNAL TRACES CONNECTED TO THE PTH.

11.2.5 Lap Terminations.

a. A heel fillet is mandatory for all single surface lapped solder joints. The heel fillet shall be continuous between the heel of the lead and the termination pad (Requirement). The heel fillet shall extend beyond the lower bend radius but shall not extend into the upper bend radius (see Figure 11-1) (Requirement).

b. Round lead lap terminations require a complete solder fillet around all sides of the lead (see Figure 11-2).

c. On ribbon lead lap terminations where one side of a lead is flush with the edge of the termination pad, a fillet of solder shall be present along at least two of the other three sides of the lead (Requirement).

11.3 Solder Cleaning

Cleaning solder connections during and after soldering shall be performed in accordance with paragraph 10.4 and verified in accordance with Chapter 14 (Requirement).

Provided by IHS
No reproduction or networking permitted without license from IHS
Licensee=NASA Technical Standards 4/9972545004, User=Garcia, Jaime
Not for Resale, 11/08/2010 15:56:56 MST

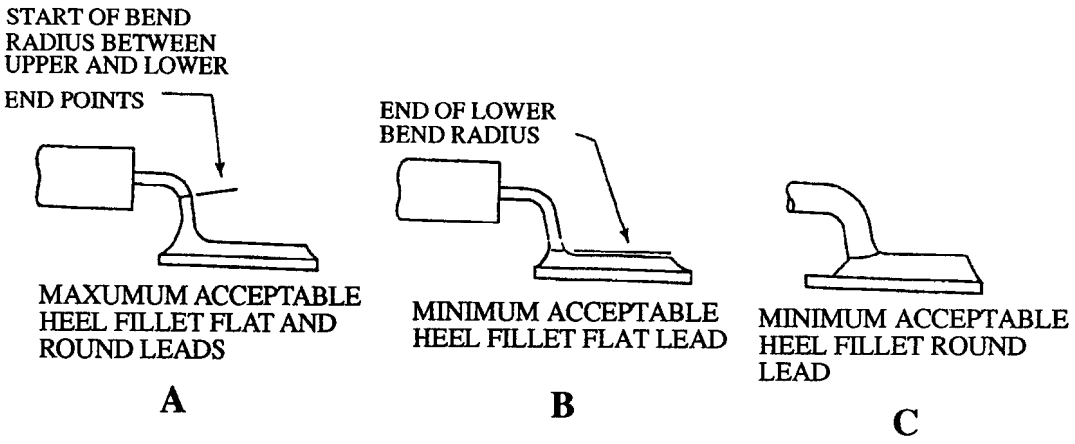

Figure 11-1. Heel Fillet

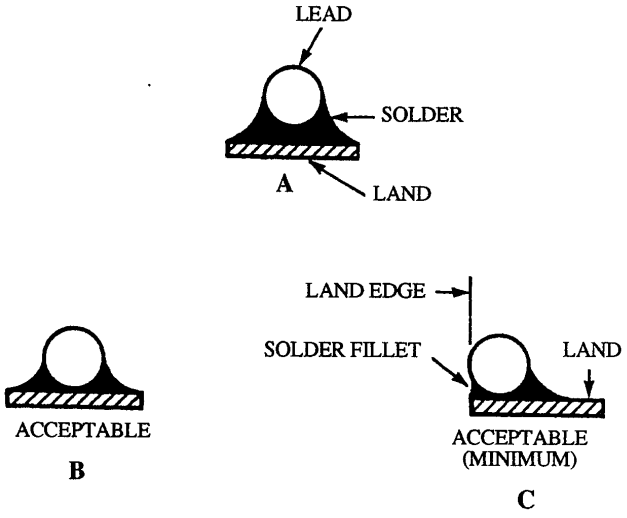

Figure 11-2. Round Lead Termination

Provided by IHS
No reproduction or networking permitted without license from IHS
Licensee=NASA Technical Standards 4/9972545004, User=Garcia, Jaime
Not for Resale, 11/08/2010 15:56:56 MST

12. AUTOMATIC WAVE SOLDERING

12.1 General

This chapter contains requirements peculiar to automatic wave soldering.

12.1.1 The supplier's process documentation for automatic wave soldering operations shall define (Requirement):

a. Preheat temperature.

b. Temperature of the solder.

c. Conveyor speed and angle.

d. Height of the solder wave.

e. Flux density.

f. Flux height.

g. Depth of PWA in wave.

h. Control of the dross inhibitors.

i. Allowable contaminants when the solder bath is analyzed.

j. Frequency of maintenance and of analysis and other factors affecting the quality of the connections in the end product.

k. Maintenance and calibration data shall be available for inspection.

12.1.2 Solder. The solder used shall be tin-lead conforming to composition SN60 or SN63 as identified in ANSI/J-STD-006 (Requirement).

12.1.3 Flux. Liquid flux solutions shall be specified as to composition and concentration. Concentration shall be controlled within specified limits by periodic measurements (e.g., specific gravity determination) and adjusted on an established schedule (Requirement).

a. Rosin Base Flux. The soldering flux shall be noncorrosive and nonconductive and shall meet the requirements as specified in paragraph 6.12. A compatible thinning solution may be added to liquid rosin flux (Requirement).

b. Water Soluble Flux. This flux shall be an organic composition (acid, halogen amine, or amide) and moderately active (Requirement). It shall have been demonstrated to be noncorrosive when used in the wave soldering application and be readily removed by water (Requirement). Prior approval by the procuring NASA Center must be obtained before using this flux type.

Provided by IHS
No reproduction or networking permitted without license from IHS
Licensee=NASA Technical Standards 4/9972545004, User=Garcia, Jaime
Not for Resale, 11/08/2010 15:56:56 MST

12.1.4 Solvents. Water with a wetting agent additive or other solvents as specified in paragraph 6.13 shall be used appropriately for cleaning PWA's (Requirement). The use of wetting agents should be followed by a thorough deionized water rinse and drying. PWA's must then be kept dry until conformally coated.

12.1.5 Oil. When oil is used to reduce surface tension and oxidation of the liquid solder, it shall be selected by using the following criteria (Requirement):

a. Thermal stability or low evaporation loss.

b. Length of "use life" before a change is necessary.

c. Weight loss.

d. Boiling point.

e. Wetting ability.

f. Ease of removal from PWA after the soldering operation.

12.2 Preparation and Assembly

12.2.1 Only PWB's with tin-lead (solder) coated or reflowed electroplated tin-lead coated conductor patterns shall be wave soldered (Requirement).

12.2.2 Parts shall be mounted as specified in Chapter 8 of this publication (Requirement). The mounting shall prevent relative motion between the part and PWB during solder solidification (Requirement). If temporary clamping is used, it shall not result in residual solder joint stresses from lead spring-back forces (Requirement).

12.2.3 PWB's shall be cleaned and demoisturized prior to wave soldering (Requirement). The bakeout time and temperature shall be established and defined in the supplier's process documentation (Requirement). Demoisturizing shall be performed within 8 hours prior to wave soldering (Requirement). Bakeout time and temperature, and the time in and out of the oven or chamber shall be recorded. PWB's may be stored for longer periods of time in a controlled moisture free atmosphere (Requirement).

12.2.4 Metal surfaces that are not to be soldered shall be masked or coated with a solder resist prior to loading (Requirement).

12.3 Process Parameters

Wave solder parameters, as defined in paragraph 12.1-1, shall be determined prior to wave soldering of production assemblies (Requirement). A sample representing the production PWA shall be used to develop the parameters (Requirement).

12.4 Wave Soldering

12.4.1 The preheat temperature shall be maintained within 2°C (5°F) (Requirement).

Provided by IHS
No reproduction or networking permitted without license from IHS
Licensee=NASA Technical Standards 4/9972545004, User=Garcia, Jaime
Not for Resale, 11/08/2010 15:56:56 MST

12.4.2 The conveyor speed shall be controlled to a preselected rate and shall not vary more than 2.54 cm (1 in.) per minute (Requirement).

12.4.3 Solder temperature shall be controlled so that the solder in the wave is 250°C (482°F) to 275°C (527°F) (Requirement).

12.4.4 The height of the solder wave shall be controlled to a constant preselected height (Requirement).

12.4.5 The solder bath shall be analyzed on an established schedule, based on usage, to assure it meets the requirements of Table 7-1 and that the total of gold plus copper does not exceed 0.3 percent (Requirement). Records of the analysis shall be maintained (Requirement). Anytime the solder produces a dull, frosty, or granular appearance on the work, the bath shall be removed from use (Requirement).

12.4.6 The oil shall be analyzed or replaced on an established schedule based on usage and degradation (Requirement).

12.4.7 A wave soldering log shall be maintained showing the process parameters as established in paragraph 12.3 for each PWA type, in order to repeat previously successful runs (Requirement). The log shall also be used to document the results of analyses as prescribed in subparagraphs 5 and 6 of this paragraph (Requirement).

12.5 Cleaning

12.5.1 After soldering, and after cooling to ambient temperature, the flux, dross inhibitor, temporary solder resist, and oil shall be promptly removed in a manner that does not damage the hardware or degrade the part marking legibility (Requirement). This shall be accomplished by using an appropriate solvent that meets the requirements of paragraph 6.13, followed by a rinse with clean solvent to ensure complete removal of the residues (Requirement).

12.5.2 Where water soluble fluxes are used, there shall be no more than a 30 minute delay between the cooling of the PWA to the temperature of the cleaning solvent and the actual cleaning (Requirement). In addition, no more than 30 minutes delay is allowed between cleaning and the final rinsing with deionized water in a controlled rinse bath.

12.5.3 The final rinse bath shall be monitored by resistivity measurements made at established intervals to pre-established resistivity limits and the results recorded (Requirement). Intervals shall be based on the number and size of PWA's cleaned, as well as time required to produce the lot. Refer to Chapter 14 for cleanliness requirements (Requirement).

12.6 Inspection

Inspection criteria listed in Chapter 13 are applicable to wave soldered assemblies. Warp or twist of the PWA shall not exceed the limits specified by the engineering documentation (Requirement).

Provided by IHS
No reproduction or networking permitted without license from IHS
Licensee=NASA Technical Standards 4/9972545004, User=Garcia, Jaime
Not for Resale, 11/08/2010 15:56:56 MST

13. QUALITY ASSURANCE PROVISIONS

13.1 General

13.1.1 Workmanship. Workmanship shall be a level of quality adequate to assure that processed products meet the performance requirements of the engineering documentation and criteria delineated herein (Requirement).

13.1.2 Inspection. Inspection for acceptability shall be performed on all solder connections, parts mounting and condition, conductor routing, and PWB features to the requirements specified in this publication (Requirement). Parts and conductors shall not be physically disturbed to aid inspection. Typical workmanship standards for solder connections are shown in Appendix A.

13.1.3 Method of Inspection. Visual inspection of all soldered connections shall be performed (Requirement). Where visual inspection is not possible, other nondestructive means (e.g., laminography, microfocus X-ray, fiberscope optics) shall be used (Requirement).

13.1.4 Quality Assurance. The following shall be performed:

a. Verify that all tests, inspections, and measurements specified by this publication have been performed (Requirement).

b. Verify that all personnel who assemble or inspect hardware in accordance with this publication have been trained and certified as specified in Chapter 5 (Requirement).

c. In-process surveillance of all assembly operations to verify that all processes and procedures implementing the requirements of this publication are current, approved, adequate, and are being accurately implemented (Requirement).

d. Verify that no damage exists on parts or PWB's prior to there being assembled and soldered (Requirement). In addition, parts and PWB's shall be inspected to verify that solderability has been maintained (Requirement).

e. Verify that the facility cleanliness, environmental conditions, and lighting requirements of Chapter 6 are being met (Requirement).

13.2 Magnification Aids

Inspection optics shall conform to the requirements of paragraph 6.8 (Requirement). Visual inspection shall be aided by magnification between 4X and 10X (Requirement). Additional magnification shall be used as necessary to resolve suspected defects (Requirement).

13.3 Documentation Verification

Quality Assurance personnel shall verify that all required documentation is current and approved (Requirement). The documentation shall include:

13.3.1 Records (Requirement):

Provided by IHS
No reproduction or networking permitted without license from IHS
Licensee=NASA Technical Standards 4/9972545004, User=Garcia, Jaime
Not for Resale, 11/08/2010 15:56:56 MST

a. Results of the visual examination as per paragraph 5.2-1.

b. Evidence of operator and inspector certification as per paragraph 5.3-2.

c. Environmental monitoring as per paragraph 6.2-1.

d. Tool calibration as per paragraph 6.4-2b.

e. Lead tinning inspection results as per paragraph 7.2-5a.

f. Solder pot and bath analyses as per paragraphs 7.2-5d and 12.4-5.

g. Demoisturizing as per paragraphs 7.3-3 and 12.2-3.

h. Wave soldering log as per paragraph 12.4-7.

i. Cleanliness level results as per paragraph 12.5-3.

13.3.2 Procedures (Requirement):

a. Soldering program as per paragraph 4.4-1.

b. Training and certification program as per paragraph 5.4-3b.

c. ESD control program as per paragraph 6.3.

d. Tool and equipment operating procedures as per paragraph 6.4-1d.

e. Calibration system as per paragraph 6.4-2.

f. Use of supplemental heat sources as per paragraph 6.5-6.

g. In-process storage and handling procedures as per paragraph 6.9-1.

h. Flux usage as per paragraph 6.12-1.

i. Special solvents as per paragraph 6.13-1.

j. Wave soldering procedure as per paragraph 12.1-1.

k. Cleaning procedures as per paragraph 14.1.

13.4 Documentation Authorization

Quality Assurance shall verify that the following documentation has been approved by the procuring NASA Center prior to implementation (Requirement):

a. Special engineering requirements as per paragraph 1.1-2.

b. Special soldering processes, materials, or connections as per paragraph 4.1-3.

Provided by IHS
No reproduction or networking permitted without license from IHS

Licensee=NASA Technical Standards 4/9972545004, User=Garcia, Jaime
Not for Resale, 11/08/2010 15:56:56 MST

c. Approval of departures from this Standard as per paragraph 4.2.

d. Repair as per paragraph 4.5-2.

e. Process documentation for special tools as per paragraph 6.4-4.

f. Chemical stripping methods as per paragraph 6.6-2c.

g. Special solders, fluxes, and solvents as per paragraphs 6.11-3, 6.12-3, and 6.13-1.

h. Water based saponifiers and detergents as per paragraph 6.13-4.

i. Nondestructive inspection methods as per paragraphs 8.4-1.

j. Water soluble flux used in wave soldering as per paragraph 12.1-3b.

k. Special cleanliness test methods as per paragraph 14.2-3.

13.5 Verification of Tools, Equipment, and Materials

13.5.1 Tools and Equipment. Tools and equipment shall be verified for conformance to the applicable requirements found in paragraphs 6.4 through 6.8 (Requirement).

13.5.2 Material. All materials shall conform to the requirements of paragraphs 6.11 through 6.13 (Requirement). Material controls shall be implemented to ensure that only conforming materials are used (Requirement). Materials not conforming to or not required for the operations involved shall be removed from the work area or tagged unusable (Requirement).

13.5.3 Solderability. Solderability of materials shall be verified for compliance with the requirements of paragraph 6.10 (Requirement).

13.6 Inspection Criteria

13.6.1 Acceptance Criteria. Acceptance criteria are described in Chapters 6 through 12 and the following:

a. The appearance of the solder joint surface shall be smooth, nonporous, undisturbed and shall have a finish that may vary from satin to bright depending on the type of solder used (Requirement).

b. Solder shall wet all elements of the connection, except as noted in paragraph 13.6-1f(2) (Requirement). The solder shall fillet between connection elements over the complete periphery of the connection as shown in Appendix A (Requirement).

c. A heel fillet is mandatory for all single surface lapped solder joints (Requirement).

d. The lead contour shall be visible (except high-voltage connections; see paragraph 10.3) (Requirement).

Provided by IHS
No reproduction or networking permitted without license from IHS

Licensee=NASA Technical Standards 4/9972545004, User=Garcia, Jaime
Not for Resale, 11/08/2010 15:56:56 MST

e. Complete wetting.

f. PTH soldering.

(1) On the solder application side, the quantity of solder shall meet all requirements established by this document (Requirement).

(2) On the side opposite from the solder application, the solder quantity shall, as a minimum, exhibit flow through and bonding of the lead or conductor to the solder pad (Requirement). A slight recessing or shrinkback of the solder into the PTH below the solder pad is acceptable providing the solder has obviously wetted the lead and onto the solder pad, and the shrinkback is slight enough that it cannot be construed to be a solder void or blowhole. Slight dewetting of the solder around the periphery of the pad on the part side of the PWB is not cause for rejection.

g. The presence of wire bundle supports as identified on the engineering documentation.

h. The presence of stress relief in leads or conductors to provide freedom of motion between points of constraint.

i. Support of parts as identified on the engineering documentation.

j. Part marking visible as identified in paragraph 8.1-3.

k. Exposed ends of leads on straight-through terminations after soldering shall not be cause for rejection if the PWA is to be conformally coated (Requirement).

l. Absence of the defects as enumerated in paragraph 13.6-2.

13.6.2 Rejection Criteria. The following are some characteristics of unsatisfactory conditions, any of which are cause for rejection:

a. Conductors and Parts:

(1) Nicks, cuts, or charring of insulation (slight discoloration from thermal stripping is acceptable).

(2) Improper insulation clearance.

(3) Improper tinning of part leads or conductors.

(4) Separation of wire strands (birdcaging).

(5) Part improperly supported or positioned (polarity, centering, planarity).

(6) Improper vertical mount of component.

(7) Part damaged.

(8) Cut, nicked, stretched, or scraped leads or wires exposing base metal.

Provided by IHS
No reproduction or networking permitted without license from IHS
Licensee=NASA Technical Standards 4/9972545004, User=Garcia, Jaime
Not for Resale, 11/08/2010 15:56:56 MST

(9) Flux residue or other contaminants.

(10) Improper wrap or stress relief.

(11) Improper positioning of lead on solder pad for lap terminations.

(12) Epoxy on unsleeved glass parts.

(13) Unsupported hookup wires in excess of 2.54 cm (1 in.) length.

(14) Swaging not in accordance with paragraph 8.2-1b.

(15) Improper lead bending or cutting.

(16) Splice used to repair broken or damaged conductor.

(17) Breakout of conductors from wire bundles not in accordance with paragraph 9.1-5.

(18) Part leads used as terminals except when designed as a terminal.

(19) Terminals or wires modified to fit.

(20) Improper clinch length.

(21) Improper lead protrusion through PWB.

(22) Part lead more than 0.25 mm (0.010 in.) above solder pad on lapped termination.

(23) A part obscuring the solder termination of another part, unless interim inspection was performed.

(24) No filler wire in functional PTH's on double sided PWB's when coupon is not evaluated.

b. Solder Connections:

(1) Cold solder connection.

(2) Overheated solder connection.

(3) Fractured or disturbed solder connection.

(4) Poor wetting.

(5) Blowholes, pinholes, and voids.

(6) Excessive solder (solder in the bend radius of axial leaded parts in PTH's is not cause for rejection provided the lead is properly formed, the topside bend radius is discernible, and the solder does not extend to within 1 lead diameter of the part body or end seal).

(7) Insufficient solder.

Provided by IHS
No reproduction or networking permitted without license from IHS

Licensee=NASA Technical Standards 4/9972545004, User=Garcia, Jaime
Not for Resale, 11/08/2010 15:56:56 MST

(8) Splattering of flux or solder on adjacent areas.

(9) Rosin solder joint.

(10) Contamination (e.g., lint, flux, dirt).

(11) Dewetting.

(12) Non-wetting.

(13) Part body (meniscus) in solder joint.

c. Printed Wiring Boards:

(1) Separation of conductor pattern from substrate.

(2) Burns on substrate.

(3) Discoloration that bridges uncommon conductors (e.g., measling, halo effect).

(4) Solder peaks, icicles, and bridging on conductor patterns.

(5) Cut, nicked, gouged, or scraped printed wiring conductor that exposes base metal (except for vertical edges).

(6) Cut, nicked, gouged, or scraped substrate that exposes glass fibers.

(7) Delamination of the PWB substrate.

(8) Solder mask tackiness, flaking, or separation from the substrate or conductors.

(9) Repaired or damaged printed wiring conductor pattern.

(10) Blisters.

Provided by IHS
No reproduction or networking permitted without license from IHS

Licensee=NASA Technical Standards 4/9972545004, User=Garcia, Jaime
Not for Resale, 11/08/2010 15:56:56 MST

14. CLEANLINESS REQUIREMENTS

14.1 General

All cleaning procedures shall be specified in the supplier's process documentation (Requirement).

14.2 Cleanliness Testing

14.2.1 Cleanliness testing is used to monitor the effectiveness of post soldering PWA cleaning processes.

14.2.2 Two basic test methods are recommended.

a. Resistivity of solvent extract test as per paragraph 14.5.

b. Sodium chloride (NaCl) equivalent ionic contamination test as per paragraph 14.6.

14.2.3 Other test methods must be approved by the procuring NASA Center before use.

14.3 Testing Frequency

14.3.1 Testing shall be performed with sufficient frequency to ensure compliance with the requirements of paragraph 14.4 (Requirement). At a minimum, this shall consist of once per shift, and immediately prior to changing the cleaning solution (Requirement).

14.3.2 It is recommended that statistical process control methods be used to control continuous solvent cleaning processes. Records of relevant readings shall be maintained for early detection of a trend towards an out of specification condition (Requirement).

14.3.3 In the event that the result of a test is unacceptable, all the PWA's that were cleaned since the last test that passed are considered unacceptable.

14.3.4 Failed PWA's shall not be recleaned until appropriate corrective actions have been performed on the cleaning system to ensure its correct operation (Requirement).

14.4 Test Limits

14.4.1 Resistivity of Solvent Extract. The resistivity of the solvent extract shall have a final value greater than 2,000,000 ohm-cm (Requirement).

14.4.2 Sodium Chloride (NaCl) Ionic Contamination Equivalent Test. The final value for this test must be less than 1.55mg per sq/cm (10mg per sq/in.) of PWB surface area.

14.5 Resistivity Of Solvent Extract Test

Solvent extract resistivity shall be measured as follows (see Table 14-1) (Requirement).

Provided by IHS
No reproduction or networking permitted without license from IHS
Licensee=NASA Technical Standards 4/9972545004, User=Garcia, Jaime
Not for Resale, 11/08/2010 15:56:56 MST

a. Prepare a test solution of 75 percent by volume isopropyl alcohol and 25 percent by volume deionized water. Pass this solution through a mixed bed deionizer cartridge. After passage through the cartridge, the resistivity of the solution shall be greater than 6 x 10^6 ohm-cm (conductivity less than 0.166 micromhos/cm) (Requirement).

b. Clean a funnel, a wash bottle, and a container with a portion of this test solution. Measure out 1.55ml of fresh test solution for each sq/cm (10ml (.34fl oz) for each sq/in.) of assembly area on both sides of the PWA.

c. Slowly direct the test solution in a fine stream onto both sides of the PWA until all measured solution is used.

d. The resistivity of the solvent extract shall be determined using a resistivity meter (Requirement).

14.6 Sodium Chloride (NaCl) Equivalent Ionic Contamination Test

Sodium chloride equivalent ionic contamination shall be measured as follows (see Table 14-1) (Requirement):

Table 14-1. Cleanliness Test Values

Test Method	Starting Resistivity	Ending Value
Resistivity of Solvent Extract	6 x 10^6 ohm-cm	Shall be greater than 2 x 10^6 ohm-cm
Sodium Chloride Equivalent	20 x 10^6 ohm-cm	Shall be less than 1.55mg/sq cm (10.0mg (.34fl oz)/sq in.)

14.6.1 The sodium chloride equivalent ionic contamination test must use a solution of 75 percent isopropyl alcohol and 25 percent deionized water. This solution must be verified for correct composition upon initial use and every 4 hours during a shift. The time limit may be extended when the results of data provide definite indications that such actions will not adversely affect the results of the test.

14.6.2 The equipment must be calibrated using a known amount of sodium chloride standard on the same schedule as the percentage composition verification.

14.6.3 The starting or reference purity of the solution must be greater than 20 x 106 ohm-centimeters (0.05 micromhos/centimeter) before each sample is tested.

14.6.4 Commercial equipment is available that can perform this test automatically. Such equipment is recommended for the control of continuous solvent cleaning operations. The equipment gives a direct readout in micrograms of NaCl per square centimeter (or square inch), but requires careful calibration to the flux system used for accurate results.

Provided by IHS
No reproduction or networking permitted without license from IHS
Licensee=NASA Technical Standards 4/9972545004, User=Garcia, Jaime
Not for Resale, 11/08/2010 15:56:56 MST

15. VERIFICATION

15.1 General

When required by the procuring NASA Center, verification tests shall be conducted to establish confidence in the reliability of the solder joints (Requirement). A test plan shall be submitted to the procuring NASA Center, or its designated representative, for approval (Requirement). The test plan shall detail the test environment, test duration, test assembly design, and failure criteria based on life and mission requirements (Requirement).

Provided by IHS
No reproduction or networking permitted without license from IHS

Licensee=NASA Technical Standards 4/9972545004, User=Garcia, Jaime
Not for Resale, 11/08/2010 15:56:56 MST

APPENDIX A ACCEPTABLE AND UNACCEPTABLE SOLDER CONNECTIONS

A.1 Typical acceptable solder connections

The illustrations in Part I of this appendix depict acceptable maximum and minimum amounts of solder on typical solder connections.

A.2 Typical unacceptable solder connections.

The illustrations in Part II of this appendix depict some characteristics of unacceptable conditions, any of which are cause for rejection.

Provided by IHS
No reproduction or networking permitted without license from IHS

Licensee=NASA Technical Standards 4/9972545004, User=Garcia, Jaime
Not for Resale, 11/08/2010 15:56:56 MST

PART I: TYPICAL ACCEPTABLE SOLDER CONNECTIONS	
FIGURE 1	FIGURE 2
FIGURE 3	FIGURE 4
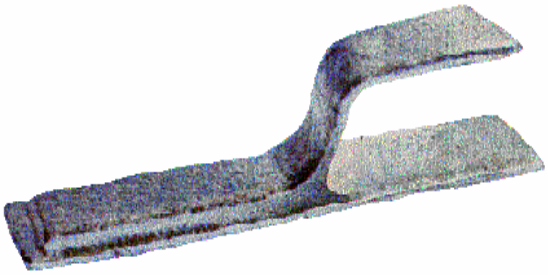 FIGURE 5	FIGURE 6

Provided by IHS
No reproduction or networking permitted without license from IHS

Licensee=NASA Technical Standards 4/9972545004, User=Garcia, Jaime
Not for Resale, 11/08/2010 15:56:56 MST

PART I. TYPICAL ACCEPTABLE SOLDER CONNECTIONS	
FIGURE 1 PWB lapped termination; Round lead from same side of PWB to rectangular pad. MINIMUM ACCEPTABLE	**FIGURE 2** PWB lapped termination; Round lead from same side of PWB to rectangular pad. MAXIMUM ACCEPTABLE
FIGURE 3 PWB lapped termination; Round lead through the PWB to rectangular pad. MINIMUM ACCEPTABLE	**FIGURE 4** PWB lapped termination; Round lead through the PWB to rectangular pad. MAXIMUM ACCEPTABLE
FIGURE 5 PWB lapped termination; Ribbon lead from same side of the PWB to rectangular pad. MINIMUM ACCEPTABLE	**FIGURE 6** PWB lapped termination; Ribbon lead from same side of the PWB to rectangular pad. MAXIMUM ACCEPTABLE

Provided by IHS
No reproduction or networking permitted without license from IHS

Licensee=NASA Technical Standards 4/9972545004, User=Garcia, Jaime
Not for Resale, 11/08/2010 15:56:56 MST

PART I: TYPICAL ACCEPTABLE SOLDER CONNECTIONS

FIGURE 7

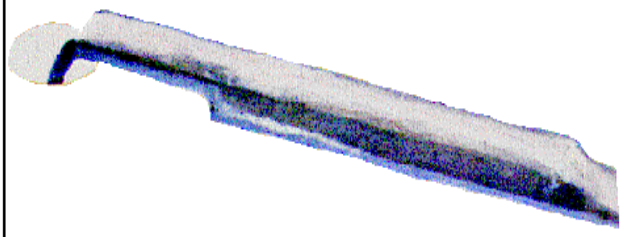

FIGURE 8

FIGURE 9

FIGURE 10

FIGURE 11

FIGURE 12

Provided by IHS
No reproduction or networking permitted without license from IHS

Licensee=NASA Technical Standards 4/9972545004, User=Garcia, Jaime
Not for Resale, 11/08/2010 15:56:56 MST

PART I. TYPICAL ACCEPTABLE SOLDER CONNECTIONS	
FIGURE 7 PWB lapped termination; Ribbon lead through the PWB to rectangular pad. MINIMUM ACCEPTABLE	**FIGURE 8** PWB lapped termination; Ribbon lead through the PWB to rectangular pad. MAXIMUM ACCEPTABLE
FIGURE 9 PWB stud termination. MINIMUM ACCEPTABLE	**FIGURE 10** PWB stud termination. MAXIMUM ACCEPTABLE
FIGURE 11 PWB clinched termination; Round lead to circular pad. MINIMUM ACCEPTABLE	**FIGURE 12** PWB clinched termination; Round lead to circular pad. MAXIMUM ACCEPTABLE

Provided by IHS
No reproduction or networking permitted without license from IHS

Licensee=NASA Technical Standards 4/9972545004, User=Garcia, Jaime
Not for Resale, 11/08/2010 15:56:56 MST

PART I: TYPICAL ACCEPTABLE SOLDER CONNECTIONS

FIGURE 13

FIGURE 14

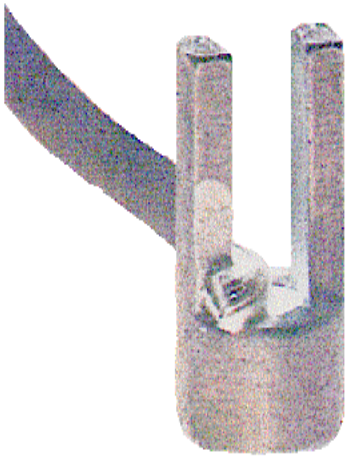

FIGURE 15

FIGURE 16

FIGURE 17

FIGURE 18

Provided by IHS
No reproduction or networking permitted without license from IHS

Licensee=NASA Technical Standards 4/9972545004, User=Garcia, Jaime
Not for Resale, 11/08/2010 15:56:56 MST

PART I. TYPICAL ACCEPTABLE SOLDER CONNECTIONS	
FIGURE 13 PWB terminal mounting: Soldering of turret terminal to pad. MINIMUM ACCEPTABLE	**FIGURE 14** PWB terminal mounting: Soldering of turret terminal to pad. MAXIMUM ACCEPTABLE
FIGURE 15 Bifurcated terminal termination: Single wire. MINIMUM ACCEPTABLE	**FIGURE 16** Bifurcated terminal termination: Single wire. MAXIMUM ACCEPTABLE
FIGURE 17 Hook terminal termination; Single wire. MINIMUM ACCEPTABLE	**FIGURE 18** Hook terminal termination; Single wire. MAXIMUM ACCEPTABLE

Provided by IHS
No reproduction or networking permitted without license from IHS

Licensee=NASA Technical Standards 4/9972545004, User=Garcia, Jaime
Not for Resale, 11/08/2010 15:56:56 MST

PART I : TYPICAL ACCEPTABLE SOLDER CONNECTIONS

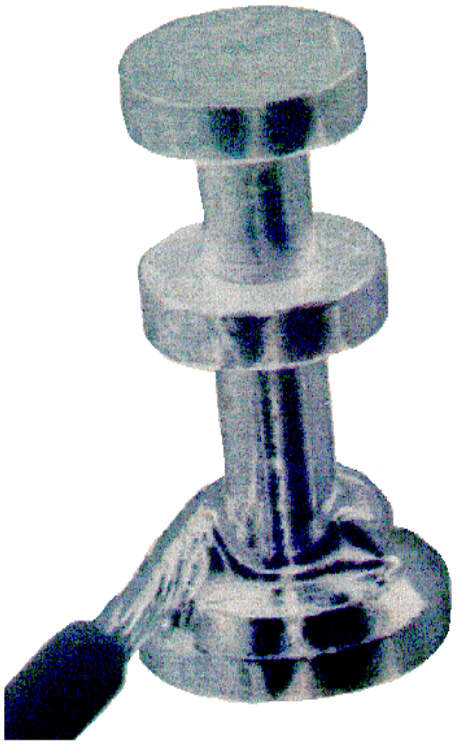

FIGURE 19

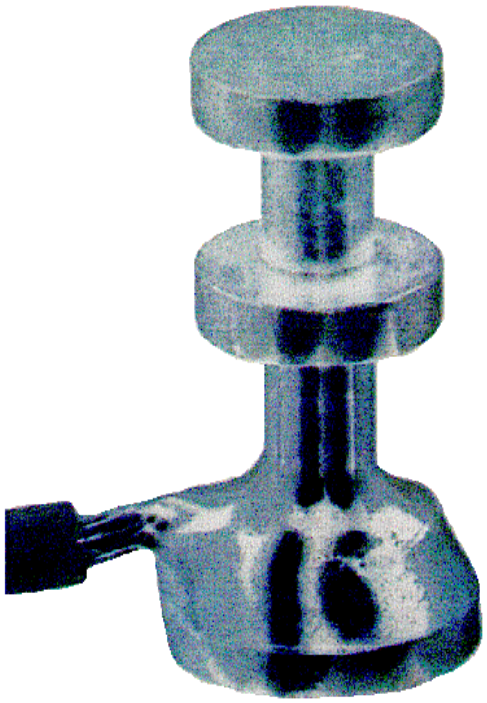

FIGURE 20

FIGURE 21

FIGURE 22

Provided by IHS
No reproduction or networking permitted without license from IHS

Licensee=NASA Technical Standards 4/9972545004, User=Garcia, Jaime
Not for Resale, 11/08/2010 15:56:56 MST

PART I. TYPICAL ACCEPTABLE SOLDER CONNECTIONS	
FIGURE 19 Turret terminal termination; Single wire. MINIMUM ACCEPTABLE	**FIGURE 20** Turret terminal termination; Single wire. MAXIMUM ACCEPTABLE
FIGURE 21 Cup terminal termination; Connector pin type. MINIMUM ACCEPTABLE	**FIGURE 22** Cup terminal termination; Connector pin type. MAXIMUM ACCEPTABLE

Provided by IHS
No reproduction or networking permitted without license from IHS

Licensee=NASA Technical Standards 4/9972545004, User=Garcia, Jaime
Not for Resale, 11/08/2010 15:56:56 MST

PART II: TYPICAL UNACCEPTABLE SOLDER CONNECTIONS

FIGURE 1

FIGURE 2

FIGURE 3

FIGURE 4

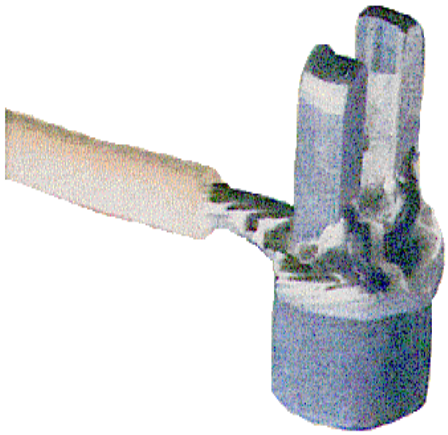

FIGURE 5

FIGURE 6

Provided by IHS
No reproduction or networking permitted without license from IHS

Licensee=NASA Technical Standards 4/9972545004, User=Garcia, Jaime
Not for Resale, 11/08/2010 15:56:56 MST

PART II. TYPICAL UNACCEPTABLE SOLDER CONNECTIONS	
FIGURE 1 Improper stripping of wire insulation. UNACCEPTABLE	**FIGURE 2** Birdcaged wire strands. UNACCEPTABLE
FIGURE 3 Recessed solder. UNACCEPTABLE	**FIGURE 4** Part body (meniscus) in solder joint. UNACCEPTABLE
FIGURE 5 Cold solder connection UNACCEPTABLE	**FIGURE 6** Overheated solder connection UNACCEPTABLE

Provided by IHS
No reproduction or networking permitted without license from IHS

Licensee=NASA Technical Standards 4/9972545004, User=Garcia, Jaime
Not for Resale, 11/08/2010 15:56:56 MST

PART II : TYPICAL UNACCEPTABLE SOLDER CONNECTIONS

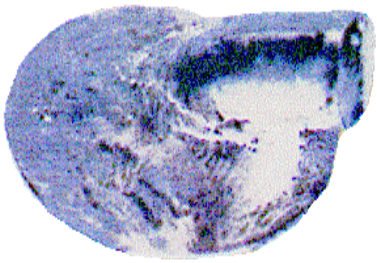

FIGURE 7

FIGURE 8

FIGURE 9

FIGURE 10

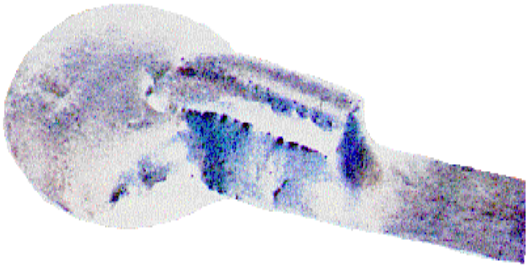

FIGURE 11

FIGURE 12

Provided by IHS
No reproduction or networking permitted without license from IHS

Licensee=NASA Technical Standards 4/9972545004, User=Garcia, Jaime
Not for Resale, 11/08/2010 15:56:56 MST

PART II. TYPICAL UNACCEPTABLE SOLDER CONNECTIONS	
FIGURE 7 Fractured/disturbed solder connection. UNACCEPTABLE	**FIGURE 8** Poor wetting. UNACCEPTABLE
FIGURE 9 Blowhole UNACCEPTABLE	**FIGURE 10** Rosin Connection UNACCEPTABLE
FIGURE 11 Dewetting. UNACCEPTABLE	**FIGURE 12** Nonwetting. UNACCEPTABLE

Provided by IHS
No reproduction or networking permitted without license from IHS

Licensee=NASA Technical Standards 4/9972545004, User=Garcia, Jaime
Not for Resale, 11/08/2010 15:56:56 MST

APPENDIX B NASA TECHNICAL STANDARD IMPROVEMENT PROPOSAL

(See Instructions - Reverse Side)

1. DOCUMENT NUMBER		2. DOCUMENT TITLE
3. NAME OF SUBMITTING ORGANIZATION		
4. ADDRESS (Street, City, State, ZIP Code)		
5. PROBLEM AREAS a. Paragraph Number and Wording b. Recommended Wording: c. Rational for Recommendation:		
6. REMARKS		
7. NAME OF SUBMITTER	8. TELEPHONE NO.	9. DATE

Provided by IHS
No reproduction or networking permitted without license from IHS

Licensee=NASA Technical Standards 4/9972545004, User=Garcia, Jaime
Not for Resale, 11/08/2010 15:56:56 MST

INSTRUCTIONS

In a continuing effort to improve our NASA Technical Standards, we invite all holders to use this form for submitting comments and suggestions for improvements. All users of NASA documents are invited to provide suggestions. The form may be detached and mailed. In block 5, be as specific as possible about particular problem areas, such as wording changes, which would alleviate the problems. Enter in block 6 any remarks not related to a specific paragraph of the document. An acknowledgment will be mailed to the submitter within 30 days. Supporting data should accompany any recommendations for changes.

NOTE: ***This form may not be used to request copies of documents, nor to request waivers, deviations, or clarification of Standard requirements on current contracts. Comments submitted on this form do not constitute or imply authorization to waive any portion of the referenced document(s) or to amend contractual requirements.***

Proposals may be submitted to:

NASA Headquarters
Office of Safety and Mission Assurance
Safety and Assurance Requirements Division
Attn: NASA SMA Technical Standards Coordinator
Washington, DC 20546-0001

Provided by IHS
No reproduction or networking permitted without license from IHS
Licensee=NASA Technical Standards 4/9972545004, User=Garcia, Jaime
Not for Resale, 11/08/2010 15:56:56 MST