National Aeronautics and
Space Administration

METRIC/
INCH-POUND

NASA-STD-5006
FEBRUARY 17, 1999

GENERAL FUSION WELDING REQUIREMENTS FOR AEROSPACE MATERIALS USED IN FLIGHT HARDWARE

NASA TECHNICAL STANDARD

Provided by IHS
No reproduction or networking permitted without license from IHS

Licensee=NASA Technical Standards 4/9972545004, User=Garcia, Jaime
Not for Resale, 01/25/2010 11:01:49 MST

--`,,,`,,`,`,,`,``,,`,,,,``,,,,`,,,,`-`-`,,`,,`,`,,`---

Provided by IHS
No reproduction or networking permitted without license from IHS

Licensee=NASA Technical Standards 4/9972545004, User=Garcia, Jaime
Not for Resale, 01/25/2010 11:01:49 MST

FOREWORD

This standard is approved for use by NASA Headquarters and all NASA Centers and is intended to provide a common framework for consistent practices across NASA programs.

This standard was developed by the NASA Materials and Processes Standards Group to provide the NASA Centers with a common standard for welds on flight hardware components. This standard does not provide the detailed process and quality assurance requirements for weldments on flight hardware. Instead, it is intended as a higher level document which states minimum requirements for the design of welded hardware. This standard provides general directions and describes the type of information that NASA expects for welded structures. When this standard is specified on contract documents, the contractor shall submit a detailed weld process specification which meets the intent of this standard. Industry, Government, and company specifications can be used for welding flight hardware if they contain the information required by this standard. This document is the original release of this standard.

NOTICE. The Government drawings, specifications, and/or data are prepared for the official use by, or on the behalf of, the United States Government. The Government neither warrants these Government drawings, specifications, or other data, nor assumes any responsibility or obligation for their use for purposes other than the Government project for which they were prepared and/or provided by the Government, or an activity directly related thereto. The fact that the Government may have formulated, furnished, or in any way supplied the said drawings, specifications, or other data is not to be regarded, by implication or otherwise, as licensing in any manner the holder or any other person or corporation, nor conveying the right or permission, to manufacture, use, or sell any patented invention that may relate thereto.

Requests for information, corrections, or additions to this standard should be directed to the Materials and Processes Laboratory, Mail Code EH41, Marshall Space Flight Center, AL, 35812. Requests for additional copies of this standard should be sent to NASA Engineering Standards, EL01, MSFC, AL, 35812 (telephone 256-544-2448). This and other NASA standards may be viewed and downloaded, free-of-charge, from our NASA Standards Homepage: http://standards.nasa.gov.

Daniel R. Mulville
Chief Engineer

Provided by IHS
No reproduction or networking permitted without license from IHS

Licensee=NASA Technical Standards 4/9972545004, User=Garcia, Jaime
Not for Resale, 01/25/2010 11:01:49 MST

This Page Left Blank Intentionally

--`,,,`,,,`,,`,`,,`,,,,`,,,`,,`,,`,,,,`-`-`,,`,,`,`,,`---

Provided by IHS
No reproduction or networking permitted without license from IHS

Licensee=NASA Technical Standards 4/9972545004, User=Garcia, Jaime
Not for Resale, 01/25/2010 11:01:49 MST

CONTENTS

PARAGRAPH		PAGE
	FOREWORD	i
	TABLE OF CONTENTS	iii
	LIST OF FIGURES AND TABLES	v
1.	SCOPE	1
1.1	Scope	1
1.2	Applicability	1
1.3	Applicable processes	1
1.4	Applicable materials	1
1.5	Joint classes	1
1.5.1	Class A	1
1.5.2	Class B	1
1.5.3	Class C	1
2.	APPLICABLE DOCUMENTS	1
2.1	General	1
2.2	References	2
2.3	Order of precedence	3
3.	DEFINITIONS	3
4.	REQUIREMENTS	4
4.1	Equipment	4
4.1.1	Welding equipment	4
4.1.1.1	Acceptance testing	5
4.1.1.2	Calibration	5
4.1.1.3	Maintenance and records	5
4.1.2	Tooling and fixtures	5
4.2	Materials	5
4.2.1	Base metals	5
4.2.2	Filler metals.	5
4.2.3	Shielding gas	5
4.2.4	Tungsten electrodes	5
4.3	Weld procedure and performance qualification	6
4.3.1	Welder performance qualification	6
4.3.2	Weld procedure specification (WPS)	6
4.3.2.1	Classes A, B, and C joints	6
4.3.2.2	Joining parameters	6
4.3.2.3	Parameter tolerances	8
4.3.3	WPS qualification	8
4.3.4	Records	8
4.4	Preweld operations	8
4.4.1	Joint design	8
4.4.2	Preweld Cleaning	8

Provided by IHS
No reproduction or networking permitted without license from IHS
Licensee=NASA Technical Standards 4/9972545004, User=Garcia, Jaime
Not for Resale, 01/25/2010 11:01:49 MST

CONTENTS (Cont'd)

PARAGRAPH		PAGE
4.5	Production welding	8
4.5.1	Equipment operational check	8
4.5.2	Temperature control	8
4.5.3	Tack welding	8
4.5.4	Welding techniques	9
4.5.4.1	Classes A and B joints	9
4.5.4.2	Class C joints	9
4.5.5	Welding procedure	9
4.5.6	Procedure departure	9
4.6	Postweld operations	10
4.6.1	Inspection	10
4.6.2	General workmanship requirements	10
4.6.3	Dimensional requirements	10
4.6.3.1	Mismatch	10
4.6.3.2	Peaking	10
4.6.3.3	Combination mismatch and peaking	11
4.6.3.4	Weld reinforcement removal	11
4.6.3.5	Fillet welds	11
4.6.4	Weldment straightening	11
4.6.5	Postweld heat treat requirements	11
4.7	Weld joint strength requirements	11
4.7.1	Butt joints	11
4.7.2	Fillet welds	11
4.8	Weldment quality requirements	13
4.9	Repair welding	13
4.9.1	Allowable repair welding	13
4.9.2	Repair welding requiring disposition	13
4.9.3	Repair welding reinspection	13
4.9.4	Multiple welding repairs	13
4.10	Quality assurance	14
4.10.1	Preweld and weld inspection	14
4.10.2	Postweld inspection	14
4.10.2.1	Visual inspection	14
4.10.2.2	Dimensional inspection	14
4.10.2.3	Internal quality inspection	14
4.10.2.4	Surface quality inspection	14
4.10.2.5	Records	15
5.	NOTES	15
5.1	Intended use	15
5.2	Ordering data	15
5.3	Changes	15

Provided by IHS
No reproduction or networking permitted without license from IHS

Licensee=NASA Technical Standards 4/9972545004, User=Garcia, Jaime
Not for Resale, 01/25/2010 11:01:49 MST

FIGURES

FIGURE		PAGE
1.	Weld Procedure Specification Example	7
2.	Welding Techniques	9
3.	Mismatch and Peaking	10
4.	Fillet Welds	12

TABLES

TABLE		PAGE
I.	Reference Specifications	2

Provided by IHS
No reproduction or networking permitted without license from IHS

Licensee=NASA Technical Standards 4/9972545004, User=Garcia, Jaime
Not for Resale, 01/25/2010 11:01:49 MST

This Page Left Blank Intentionally

--``,,,`-`-`,,`,,`,`,,`---

Provided by IHS
No reproduction or networking permitted without license from IHS

Licensee=NASA Technical Standards 4/9972545004, User=Garcia, Jaime
Not for Resale, 01/25/2010 11:01:49 MST

GENERAL FUSION WELDING REQUIREMENTS FOR AEROSPACE MATERIALS USED IN FLIGHT HARDWARE

1. SCOPE

1.1 Scope. This standard establishes the processing and quality assurance requirements for manual, automatic, machine, and semiautomatic fusion welding for space flight applications and special test equipment used for testing flight hardware within NASA.

1.2 Applicability. This standard recommends engineering practices for NASA programs and projects. It may be cited in contracts and program documents as a technical requirement or as a reference for guidance. Determining the suitability of this standard and its provisions is the responsibility of program/project management and the performing organization. Individual provisions of this standard may be tailored (i.e., modified or deleted) by contract or program specifications to meet specific program/project needs and constraints.

1.3 Applicable processes. This standard covers all fusion processes used for joining metallic materials. This includes, but is not limited to: arc welding (AW), solid state welding (SSW), resistance welding (RW), and high energy density welding (HEDW).

1.4 Applicable materials. This standard covers all metallic materials used in the manufacture of spaceflight hardware only.

1.5 Joint classes. Welding performed using this standard shall be classified in accordance with the service of the joints as follows:

1.5.1 Class A. Class A joints are critical and structural. Failure of a Class A joint would result in loss of life, mission, spacecraft, etc. Class A joints shall have the highest level of scrutiny appropriate to criticality of performance including internal and external weld integrity verification.

1.5.2 Class B. Class B joints are noncritical and structural and shall be considered fail safe. Class B joints shall require weld integrity verification (either external, internal, or both) appropriate for the intended use.

1.5.3 Class C. Class C joints are noncritical and nonstructural and are contained so that failure will not affect other flight elements or personnel. These joints shall require minimal weld integrity verification.

2. APPLICABLE DOCUMENTS

2.1 General. No subtier documents are imposed by this standard. The contractors are responsible for demonstrating their ability to satisfy the requirements of this standard. Contractors must provide company specifications, plans, industry standards, etc., to the procuring agency upon submission of the contract proposal or preliminary design review as required for evaluation of adequacy in meeting this standard.

Provided by IHS
No reproduction or networking permitted without license from IHS
Licensee=NASA Technical Standards 4/9972545004, User=Garcia, Jaime
Not for Resale, 01/25/2010 11:01:49 MST

2.2 References. The documents listed in Table I may be referenced for detailed process requirements.

TABLE I. Reference Specifications

MARSHALL SPACE FLIGHT CENTER	
MSFC-SPEC-504C	Welding Aluminum Alloys
MSFC-SPEC-560A	Fusion Welding of Steels, Corrosion and Heat Resistant Alloys
MSFC-SPEC-766	Welding Titanium Alloys
JOHNSON SPACE CENTER	
JSC-PRC-0001	Process Specification for the Manual Arc Welding of Aluminum Alloy Flight Hardware
JSC-PRC-0004	Process Specification for the Manual Arc Welding of Titanium Alloy flight Hardware
JSC-PRC-0006	Process Specification for the Manual Arc Welding of Steel and Nickel Alloy Flight Hardware
JSC-PRC-0009	Process Specification for the Resistance Spot Welding of Battery Assemblies
JSC-PRC-0010	Process Specification for the Orbital Arc Welding of steel and Nickel Alloy Tubular Flight Hardware
FEDERAL	
BB-0925	Oxygen, Technical, Gas and Liquid
BB-H-886	Hydrogen Gas
MILITARY	
MIL-STD-1537	Eddy Current Conductivity Testing
MIL-STD-2219	Fusion Welding for Aerospace Applications
MIL-STD-2154	Ultrasonic Inspection
MIL-A-18455	Argon, Technical
MIL-H-81200	Heat Treatment of Titanium Alloys
MIL-PRF-27401	Nitrogen
MIL-PRF-27407	Helium
MIL-H-6875	Military Specification - Heat Treatment of Steel, Process for
AMERICAN WELDING SOCIETY (AWS)	
AWS QC1	Standard for AWS Certification of Welding Inspectors
AWS A2.4	Symbols for Welding and Nondestructive Testing
AWS A3.0	Welding Terms and Definitions
AWS A5.3	Specification for Consumable Inserts
AWS A5.9	Specification for Corrosion Resisting Chromium and Chromium Nickel Steel Bare Welding Rods and Electrodes
AWS A5.10	Aluminum and Aluminum Alloy Bare Welding Rods and Electrodes
AWS A5.12	Tungsten Arc Welding Electrodes
AWS A5.14	Specification for Nickel and Nickel Alloy Bare Welding Rods and Electrodes
AWS A5.16	Titanium and Titanium Alloy Bare Welding Rods and Electrodes
AWS B2.1	Standard for Weld Procedure and Performance Qualification
AWS B4.0	Standard Methods for Mechanical Testing of Welds
AWS D1.1	Structural Welding Code - Steels
AWS D1.2	Structural Welding Code - Aluminum
AWS D17.1	Specification for Fusion Welding of Aerospace Applications
AMERICAN SOCIETY FOR TESTING AND MATERIALS (ASTM)	
ASTM E-8	Methods of Tension Testing of Metallic Materials
ASTM-E-1417	Inspection, Dye Penetrant
ASTM-E-1444	Inspection Process, Magnetic Particle
ASTM-E-1742	Inspection, Radiographic

Provided by IHS
No reproduction or networking permitted without license from IHS
Licensee=NASA Technical Standards 4/9972545004, User=Garcia, Jaime
Not for Resale, 01/25/2010 11:01:49 MST

TABLE I. Reference Specifications (Cont'd)

NATIONAL AEROSPACE STANDARDS (NAS)	
NAS-410	Nondestructive Testing Personnel Qualification and Certification
NAS 1514	Radiographic Standard for Classification of Fusion Weld Discontinuities
AMERICAN NATIONAL STANDARDS INSTITUTE (ANSI)	
ANSI/RWS A5.10-80	Electrodes, Welding, Bare, Aluminum Alloys
SOCIETY OF AUTOMOTIVE ENGINEERS (SAE)	
AMS-STD-1595	Qualification of Aircraft, Missile, and Aerospace Fusion Welders
AMS 2680	Electron Beam Welding for Fatigue Critical Applications
AMS 2681	Electron Beam Welding
AMS-2801	Heat Treatment of Titanium Alloys
AMS-H-6088	Heat Treatment of Aluminum Alloys

2.3 Order of precedence. Where this document is adopted or imposed by contract on a program or project, the technical guidelines of this document take precedence, in the case of conflict, over the technical guidelines cited in other referenced documents.

3. DEFINITIONS

3.1 Automatic welding. Welding with equipment that performs the welding operation without adjustment of the controls by a welding operator.

3.2 Concave root surface . A weld root with penetration not extending beyond the thickness of the parent metal. Sometimes referred to as suckback.

3.3 Essential variables. Weld process parameters which directly influence the weld process and resulting weld properties. Some examples are current, voltage, travel speed, etc.

3.4 Fail safe. A condition shown by analysis or test that, due to structural redundancy, the structure remaining after failure of the one part can sustain the new limit loads with an ultimate factor of safety equal to or greater than 1.0 and the remaining structure has sufficient fatigue life to complete the mission.

3.5 Heat input. Quantity of energy introduced per unit length of weld from a traveling heat source, expressed in joules per millimeter (joules per inch). Computed as the ratio of the total input power of the heat source in watts to the travel velocity in millimeters per second (inches per minute).

3.6 Heat sensitive alloys. Alloys which demonstrate a reduction in mechanical properties or corrosion resistance due to exposure to elevated temperatures associated with welding.

3.7 Incomplete fusion. A weld discontinuity in which fusion did not occur between weld metal and fusion faces or adjoining weld beads.

3.8 Incomplete joint penetration. A weld depth extending from its face into the joint, exclusive of reinforcement, which is less than the joint thickness.

3.9 Lack of fill. A weld face surface not extending beyond the thickness of the parent metal.

3.10 Machine welding. Welding with equipment that performs the welding operation under the constant observation and control of a welding operator.

Provided by IHS
No reproduction or networking permitted without license from IHS
Licensee=NASA Technical Standards 4/9972545004, User=Garcia, Jaime
Not for Resale, 01/25/2010 11:01:49 MST

3.11 Manual welding. A welding operation performed and controlled completely by hand.

3.12 Material thickness. The minimum material thickness of a joint member per drawing tolerance. The thinner of the joint members with different thicknesses is designated "t".

3.13 Mismatch. The linear distortion of the components resulting from welding. Mismatch is calculated as the difference in the alignment of the center lines of the two parts having been welded. Mismatch should not be confused with the difference in center lines as a result of welding two different thickness components.

3.14 Peaking. The angular distortion of the components resulting from welding. Peaking is calculated as the angle resulting from the intersection of tangents taken from the surface of the two components being welded.

3.15 Procedure qualification record (PQR). A document providing the actual welding variables used to produce an acceptable test weld and the results of tests conducted on the weld for the purpose of demonstrating process and procedural capability and repeatability. Demonstration of capability qualifies the welding procedure.

3.16 Qualified inspector. A certified individual with the responsibility and ability to judge the quality of the welded specimens in relation to some form of written specification. Welding inspectors shall be certified to AWS QC1 or equivalent and Non Destructive Evaluation inspectors shall be certified to NAS-410 or equivalent.

3.17 Semiautomatic welding. Welding with equipment that controls only the filler metal feed. The advance of welding is manually controlled.

3.18 Undercut. A groove melted into the base metal adjacent to the weld toe or weld root and left unfilled by weld metal.

3.19 Welder performance qualification (WPQ). The demonstration of a welder's ability to produce welds meeting prescribed standards.

3.20 Weld procedure specification (WPS). A document providing in detail the required variables for a specific application to ensure repeatability by properly trained welders and welding operators.

3.21 Weld zone. The weld metal fusion zone plus the heat-affected zone.

4. REQUIREMENTS

4.1 Equipment.

4.1.1 Welding equipment. Automatic, semiautomatic, and machine welding shall be accomplished using equipment containing calibrated dials, meters, or recorders that quantitatively indicate process parameters. All joining equipment (including manual) shall be capable of producing joints that meet the requirements specified herein.

Provided by IHS
No reproduction or networking permitted without license from IHS
Licensee=NASA Technical Standards 4/9972545004, User=Garcia, Jaime
Not for Resale, 01/25/2010 11:01:49 MST

4.1.1.1 Acceptance testing. New, repaired, relocated, or modified welding machines for automatic, semiautomatic and machine welding shall be acceptance tested prior to processing of flight hardware. Machines shall meet the requirements of the applicable purchase specification, design specification, or modification order. Power supplies and supporting components (electrical or mechanical or both) shall be capable of operating reliably within the range of parameters and duty cycle to be used for joining production parts.

4.1.1.2 Calibration. Measuring instruments, meters, gages, or direct reading electrical control circuits to be used for automatic, semiautomatic, and machine joining operations shall be initially calibrated and periodically recalibrated to maintain adequate performance or when any maintenance is performed that may have changed calibration.

4.1.1.3 Maintenance and records. Records shall be maintained and made available to the procuring agency or its representative upon request. Welding machines shall be provided with adequate periodic maintenance service so that acceptable welds can be produced using qualified welding procedure specifications. A current record of each maintenance repair or functional check shall be maintained for each welding machine. Records shall be located on the welding machines.

4.1.2 Tooling and fixtures. Tooling and fixtures used in the joining operation shall be constructed of nonmagnetic materials that do not affect the welding arc or beam, or that are not detrimental to the weld quality. Tooling and fixtures shall not be a source of contamination of the joint. Magnetic materials, when used, shall be degaussed prior to welding. Degausing shall be controlled by the WPS when necessary for the successful completion of the weld. Tooling and fixtures shall ensure compliance with dimensional requirements of 4.6.3 and shall be identified on the WPS.

4.2 Materials.

4.2.1 Base metals. Unless otherwise specified or approved by the procuring agency, base metal alloy shall conform to applicable Government and/or industry specifications for each given alloy group. The base metal, material condition, and appropriate specification shall be recorded as a part of the WPS. Weld start and runoff tabs, when used, shall be of the same alloy as the material being joined and shall be welded with the same filler metal specified on the drawing or WPS. Backing material may be used when verified by procedure qualification.

4.2.2 Filler metals. Unless otherwise specified or approved by the procuring agency, filler metal alloy shall conform to applicable Government and/or industry specifications for each given alloy group. Specifications used to procure filler metals shall preclude the opportunity for incorrect filler wire chemistry to get mixed into spooled filler wire or filler rod cartons. Weld filler metals and the appropriate specifications shall be recorded on the WPS.

4.2.3 Shielding gas. Welding-grade gases conforming to the applicable industry or military specifications shall be used for gas shielding when required. The shield gas type and flow rates shall be recorded as a part of the WPS.

4.2.4 Tungsten electrodes. Tungsten electrodes shall conform to the applicable industry or military specifications. The electrode diameter, electrode tip shape, and alloy composition shall be recorded as a part of the WPS.

Provided by IHS
No reproduction or networking permitted without license from IHS
Licensee=NASA Technical Standards 4/9972545004, User=Garcia, Jaime
Not for Resale, 01/25/2010 11:01:49 MST

4.3 Weld procedure and performance qualification.

4.3.1 Welder performance qualification. Operators of automatic, semiautomatic, machine, or manual welding equipment shall be certified for the applicable process. Certification criteria and proof of operator certification shall be provided to the procuring agency prior to welding of flight hardware.

4.3.2 Weld procedure specification (WPS). Prior to first production of parts, or when changes to essential variables of the WPS are made, qualification joints shall be made to establish a satisfactory WPS for each different configuration of Classes A, B, and C welds. Figure 1 contains an example of a WPS (for reference only). Variables considered essential shall be so identified on the WPS.

4.3.2.1 Classes A, B, and C joints. Classes A, B, and C joints shall be qualified with joints that simulate the production part with respect to section thickness, alloy, heat-treat condition, joint preparation, preweld cleaning, fit-up, and postweld operations. The joints shall be processed in either the actual production fixture or in a test fixture simulating the production fixture using the production welding equipment. Base metal for qualification joining tests shall be identified by lot or heat number, type, and condition and shall maintain identification through all evaluation processes. The qualification weld shall be subjected to metallurgical evaluation and the same postweld inspections and processes as the production parts, including reinforcement removal, mechanical deformation, stress relief, and thermal treatments associated with artificial aging or any operation affecting mechanical properties.

4.3.2.2 Joining parameters. As a minimum, all essential joining variables (such as voltage, current, rate of travel, and filler-wire feed rate) shall be recorded during qualification welding. Manual weld parameters and operating parameter ranges shall be established during the weld procedure specification qualification. The WPS shall document all prewelding operations, setup conditions, welding equipment, and any pertinent information about the welding system used which affects the joining operation.

4.3.2.3 Parameter tolerances. For automatic, semiautomatic, and machine joining, parameter tolerances may be used and shall be listed in the qualified WPS. Test samples representing the minimum and maximum heat input shall be processed to verify acceptable welds and the results shall be documented in the PQR.

4.3.3 WPS qualification. All test and inspection results used to verify the weld integrity shall be recorded on the PQR.

4.3.4 Records. WPS and PQR records shall be signed and dated by the initiating organization and a qualified inspector as an accurate record of the welding and testing of the procedure test weldment. Records shall be maintained and made available to the procuring agency upon request.

The WPS and PQR shall be prepared and retained as a permanent record in accordance with contract requirements. WPS's and PQR's shall be provided to the procuring agency prior to production of flight hardware. One current copy of each shall be maintained at the welding station.

Provided by IHS
No reproduction or networking permitted without license from IHS
Licensee=NASA Technical Standards 4/9972545004, User=Garcia, Jaime
Not for Resale, 01/25/2010 11:01:49 MST

Weld Panel ID	Program Code	Material Type	Material Heat Lot Number	Material Manufacturer	Material Thickness	Material Ser. Num	Welding Process (dc-,dc+,type)

Operator	Electrode Type	Welding Torch	Welding Torch Shield Cup	Torch Orientation (Lead, Lag)	Welding Position (Vertical)	Back Purge Gas Type	Plasma Gas Type	Shield Gas Type	Trailing Shield Gas Type

Building Number	Power Supply	Weld Fixture	Weld Station	Back Purge Type	Filler Wire Type	Filler Wire Heat Lot Number	Filler Wire Manufacturer	Trailing Shield Type

Electrode Configuration	Joint Configuration

Weld Passes	Welding Current	Welding Voltage	Shield Gas Flow (SCFH)	Plasma Gas Flow Rate	Plasma Gas Pressure	Filler Wire Size Dia.	Filler Wire Rate (IPM)	Travel Rate (IPM)	Interpass Temperature	Orifice Size
Tack Pass										
First Pass										
2nd Pass										
3rd Pass										
4th Pass										
5th Pass										
6th Pass										
7th Pass										
8th Pass										

Weld Passes	Electrode Size	Electrode Set Back	Back Purge Gas Flow	Back Purge Gas Pressure	Trailing Shield Gas Flow	Straight Polarity Time (ms)	Reverse Polarity Time (ms)	Added Reverse Current	Arc Oscillation Dwell	Arc Oscillation Frequency	Arc Oscillation Position	Arc Oscillation Amplitude
Tack Pass												
First Pass												
2nd Pass												
3rd Pass												
4th Pass												
5th Pass												
6th Pass												
7th Pass												
8th Pass												

Comments:

FIGURE 1. Weld Procedure Specification Example

Provided by IHS
No reproduction or networking permitted without license from IHS

Licensee=NASA Technical Standards 4/9972545004, User=Garcia, Jaime
Not for Resale, 01/25/2010 11:01:49 MST

4.4 Preweld operations.

4.4.1 Joint design. Acceptable joint designs are butt, lap, corner, tee, and edge. All joints shall be documented on a WPS, design drawing, or other suitable document.

4.4.2 Preweld cleaning. Preweld cleaning of contaminants detrimental to weld quality on filler materials and surfaces to be welded shall be accomplished in an environment which will not degrade the quality of the weld. Cleanliness shall be maintained during welding. Preweld and interpass cleaning requirements shall be included in the WPS.

4.5 Production welding.

4.5.1 Equipment operational check. A welding equipment operational readiness check shall be made immediately prior to a production weld to verify the equipment is operating properly. The equipment operational readiness check criteria shall be provided to the procuring agency.

4.5.2 Temperature control. Preheat, interpass, and postheat temperatures shall be controlled so as not to degrade the properties of the material being welded. These parameters shall be recorded in an applicable WPS.

4.5.3 Tack welding. Tack welding shall be allowed and shall become a part of the finished weld (i.e., tack welds must be completely consumed by the final weldment). After the weldment is completed, the tack areas shall be evaluated to the requirements of the finished weld. Tack welding requirements shall be included in the WPS.

4.5.4 Welding techniques.

4.5.4.1 Classes A and B joints. The technique of welding the initial passes from both sides where the weld roots overlap beneath the exposed surfaces (reference Figure 2 [A]) shall not be allowed. Joints which have prepared grooves from one or both sides (reference Figure 2 [B] and [C]) and/or multi-pass welds shall have a weld land which is completely penetrated on the initial pass. Partial penetration welds from one side are permissible provided the opposite side is machined into the penetration root prior to completing the weld. Adequate nondestructive evaluation (NDE) procedures shall be employed to ensure that the weld root has been exposed by machining. All penetration weld passes shall have no visual evidence of improper fusion or presence of dross. Square groove welds shall be completely penetrated from one side (reference Figure 2 [D]).

4.5.4.2 Class C joints. The technique of welding and joint geometry shall be as stated on the engineering drawing, the WPS, and/or as determined by the contractor. Partial penetration groove welds shall be used only for Class C joints.

Provided by IHS
No reproduction or networking permitted without license from IHS
Licensee=NASA Technical Standards 4/9972545004, User=Garcia, Jaime
Not for Resale, 01/25/2010 11:01:49 MST

4.5.5 Welding procedure. Production welding shall be accomplished according to a qualified WPS. A specific WPS for each weld is required for production welding Classes A, B, and C.

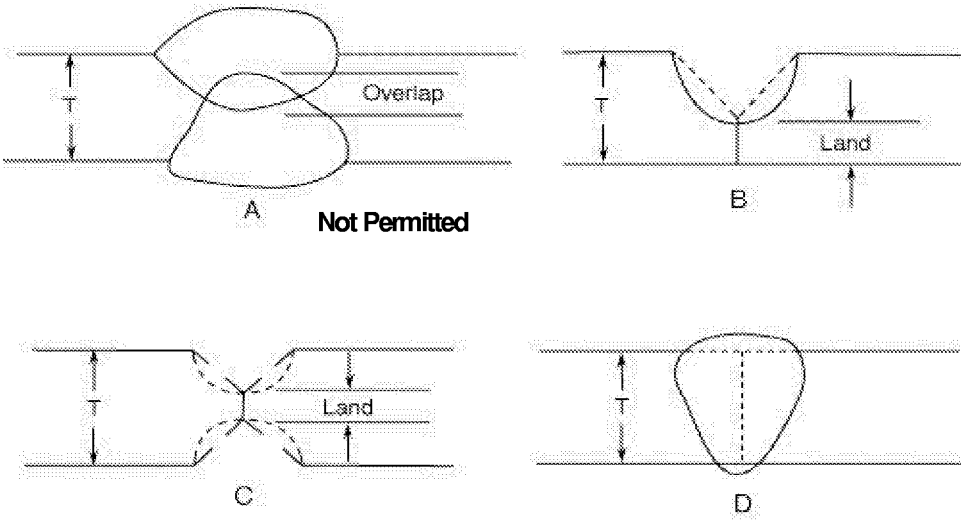

FIGURE 2. Welding Techniques

4.5.6 Procedure departure. Departure from the qualified WPS during production welding shall require withholding the part for Material Review Board disposition. The cause for departure shall be determined, and corrective action shall be taken prior to further production welding.

4.6 Postweld operations.

4.6.1 Inspection. Each completed weldment and the base metal for a minimum 12.5 mm (0.5 inch) on either side of the weld interface shall be inspected to ensure compliance with the requirements of 4.6.2, 4.6.3, 4.8, and as dictated by the class of the weld.

4.6.2 General workmanship requirements. When employing visual inspection, weld deposits, buildup, and root reinforcement shall display a uniform appearance. The edge of the weld deposit shall blend into the base metal without unfused overlaps or undercut. The face and root sides shall be free of surface cracks, crater cracks, and other defects open to the surface. The deposits shall be free of open voids or unfused overlapping folds. Undercutting, concavity, lack of fill, or suckback shall be unacceptable in any weld where it occurs as a sharp notch or where the depth reduces the material thickness below the minimum thickness specified on the applicable drawing.

Provided by IHS
No reproduction or networking permitted without license from IHS
Licensee=NASA Technical Standards 4/9972545004, User=Garcia, Jaime
Not for Resale, 01/25/2010 11:01:49 MST

4.6.3 Dimensional requirements.

4.6.3.1 Mismatch. The allowable postweld mismatch shall be specified by drawing tolerances. Weld joint mismatch is shown in Figure 3.

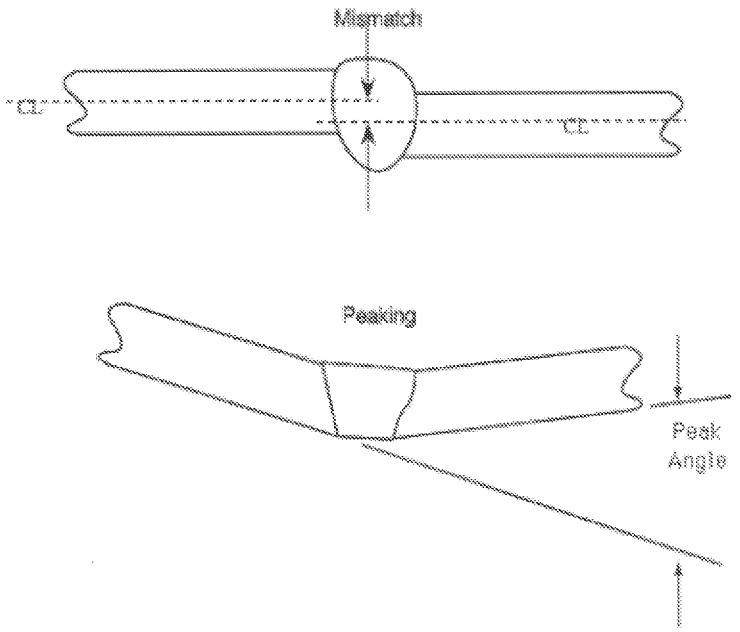

FIGURE 3. Mismatch and Peaking

4.6.3.2 Peaking. The allowable postweld peaking of the welded joint and adjacent base metal shall be specified by the drawing. A standard template or other device having specified reference points shall be used for determination of peaking. Weld peaking is shown in Figure 3.

4.6.3.3 Combination mismatch and peaking. The combined effect of mismatch and peaking on the efficiency of the weld joint is so related that one can be increased if the other is decreased. This condition can be tolerated if it can be shown by engineering analysis that positive margins of safety exist.

4.6.3.4 Weld reinforcement removal. Weld reinforcement, both face side and root side, shall be removed when specified by the engineering drawing. The weld bead reinforcement may also be removed to eliminate defects occurring in the outer zones of the reinforcement unless otherwise specified on the engineering drawing. Such removal shall not thin the weld or parent metal below drawing dimensional requirements. When flush contour is required by the welding symbol, weld reinforcement shall not exceed 0.4 mm (0.015 inch). Metal removal shall be such that the reworked area shall blend smoothly (e.g., 0.125" radius with adjacent material without abrupt sectional changes. Surface roughness, after reinforcement removal, shall not exceed average root-mean-square. Grinding of base metal is permitted when wall thickness is verified after grinding.

Provided by IHS
No reproduction or networking permitted without license from IHS
Licensee=NASA Technical Standards 4/9972545004, User=Garcia, Jaime
Not for Resale, 01/25/2010 11:01:49 MST

4.6.3.5 Fillet welds. Continuous fillet welds, including outside corner joints, lap joints, and tee joints, shall have a minimum of 10 percent penetration into the root of the joint 100 percent of the length (reference Figure 4). Intermittent fillet welds shall have fusion of the root throughout the specified length. Unless otherwise specified on the engineering drawing, the fillet may be extended by 6 mm (0.25 inch) at each end without penetration in the extension. The minimum acceptable fillet size shall be that specified by the engineering drawing. The maximum acceptable fillet size shall be the size specified plus 50 percent or 4.8 mm (0.188 inch), whichever is less, as permitted in 4.9. The minimum acceptable actual throat shall equal or exceed the theoretical throat (reference Figure 4). Fillet weld fusion of the root (reference Figure 4) shall be determined by evaluation of transverse sections taken from the qualification welds.

4.6.4 Weldment straightening. Welds and adjacent base metal which have been deformed by the welding operation may be straightened; however, prior to implementation, it shall be verified by nondestructive testing, destructive testing, and metallurgical evaluation that the process used for straightening shall not degrade the weld and surrounding material below the specified design requirements. Following weldment straightening, the weld and adjacent base metal shall be inspected in accordance with 4.6.1. Weldments in which defects have been revealed by such operations shall not be acceptable.

4.6.5 Postweld heat treat requirements. Weldments subject to heat treatment operations shall subsequently be inspected to the surface quality requirements of 4.9. Postweld heat treatment processing shall be included in the WPS.

4.7 Weld joint strength requirements.

4.7.1 Butt joints. Weld joint strength requirements shall be established by design requirements. Qualified WPS's shall be established to demonstrate the weld meets the strength required by design.

4.7.2 Fillet welds. Unless otherwise directed by the procuring agency, fillet weld shear strength shall meet 60 percent of the ultimate tensile requirements of the weld. Where ultimate tensile strength values vary for different *thicknesses* of the same temper, 60 percent of the minimum *value* shall apply.

Provided by IHS
No reproduction or networking permitted without license from IHS
Licensee=NASA Technical Standards 4/9972545004, User=Garcia, Jaime
Not for Resale, 01/25/2010 11:01:49 MST

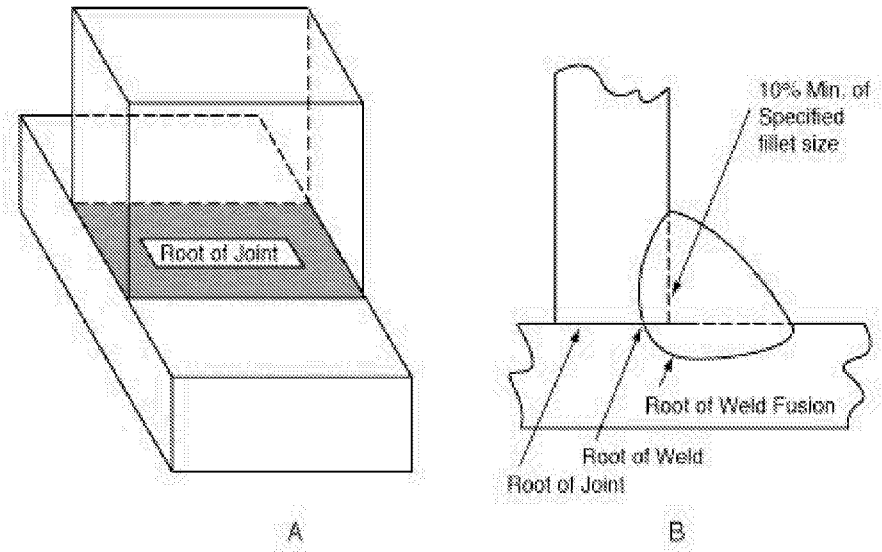

Notes: Root of Joint – That portion of a joint where members are closest to each other.

Root of Weld – The point, as shown in cross section, at which the weld intersects the base metal surfaces.

The root of the weld shall penetrate to the extent that the actual throat dimension exceeds the theoretical throat dimension. In addition, each member shall be penetrated a minimum of 10% of the specified fillet size at the root of the weld. Each leg length shall show fusion along the surface of each common member.

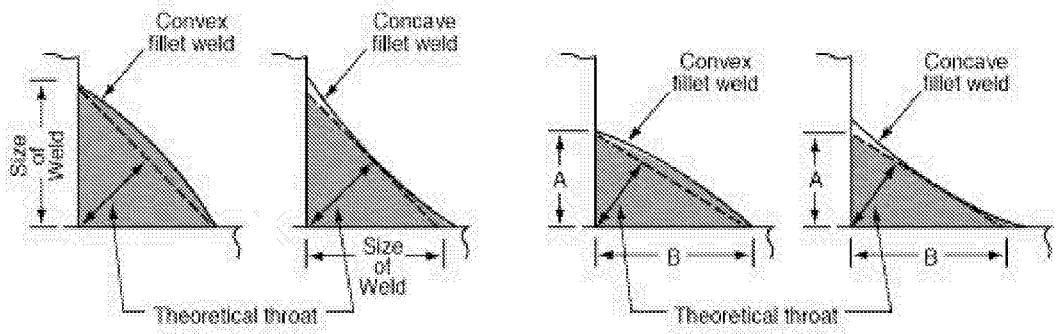

For equal-leg fillet welds, the fillet size is equal to the leg length of the largest inscribed right isosceles triangle.

For unequal-leg fillet welds, the leg lengths of the largest right triangle which can be inscribed within the fillet weld cross section. Size of weld is A and B.

FIGURE 4. Fillet Welds

Provided by IHS
No reproduction or networking permitted without license from IHS
Licensee=NASA Technical Standards 4/9972545004, User=Garcia, Jaime
Not for Resale, 01/25/2010 11:01:49 MST

4.8 Weldment quality requirements. Weldment quality requirements shall be established to ensure the weld meets design requirements for strength and integrity. The weld quality requirements shall be shown by engineering analysis (e.g., stress and fracture mechanics analyses) and verified by mechanical testing to result in structural properties that are adequate for intended applications. Supporting test data and rationale shall be approved by the procuring agency.

4.9 Repair welding.

4.9.1 Allowable repair welding. Additional welding operations shall be permitted to correct any unacceptable condition established per 4.8 provided the repair welding parameters and procedures are specified in a qualified repair WPS, and the repair is contained within the original weld zone. Complete records of the repair welding operation, including identification of the repaired weldment, type of defect, and location of the repair weld shall be retained in permanent records. Examples of typical weld defects requiring repair are listed below.

a. Undercut

b. Lack of fill

c. Concave root surface

d. Incomplete joint penetration

e. Crack and crack-like defects

f. Oxides and porosity

g. Lack of fusion

4.9.2 Repair welding requiring disposition. The following conditions require disposition by the procuring agency:

a. When more than two weld repair attempts have been performed on any one location on materials known to be heat sensitive.

b. When the wrong filler metal has been used.

c. When a weldment has been postweld heat treated to increase the strength and cannot be returned to drawing requirements with additional heat treatments after reweld.

d. When finish machining has been completed prior to rewelding.

e. When the repair extends outside the original weld zone.

4.9.3 Repair welding reinspection. Reinspection of all repair weld areas shall be performed using the same methods/requirements as the original weld.

4.9.4 Multiple welding repairs. It shall be demonstrated that design strength requirements are met in any given area subjected to multiple repairs.

Provided by IHS
No reproduction or networking permitted without license from IHS
Licensee=NASA Technical Standards 4/9972545004, User=Garcia, Jaime
Not for Resale, 01/25/2010 11:01:49 MST

4.10 Quality assurance. The supplier is responsible for the performance of all inspection requirements as specified herein. Except as otherwise specified, the supplier shall use inspection facilities and services acceptable to and approved by the procuring agency. Inspection and test records shall be kept complete and, upon request, made available to the procuring agency or its designated representative. The procuring agency or its designated representative reserves the right to perform any or all of the inspections set forth in the specification to ensure that the end item conforms to the prescribed requirements. Nondestructive testing procedures to be employed in inspection for weldment internal and surface quality requirements shall be qualified/validated as being capable of detecting the weldment quality criteria prescribed prior to inspection of the first production weld. The documented proof of capability shall be retained as a permanent record.

4.10.1 Preweld and weld inspection. Documentation relative to the production weld shall be inspected for conformance with section 4. The contractor shall certify that each production weld was made within the range of operating parameters established in the WPS. All departures shall be noted and referred to the procuring agency for disposition.

4.10.2 Postweld inspection.

4.10.2.1 Visual inspection. The weld metal and adjacent base metal for a minimum of 12.5 mm (0.5 inch) on either side of the weld interface shall be visually inspected to ensure compliance with the requirements of 4.6.2 for all weld classes. The weld shall be in the as-welded condition for the initial inspection, except that surface smut and loose oxide shall have been removed in such a way that does not smear metal or change the quality of the weld. Titanium weld deposit and heat-affected zone shall be a light straw or bright silver color.

4.10.2.2 Dimensional inspection. Dimensional inspection shall be performed on weldments to ensure compliance with the requirements of the design drawing for all weld classes.

4.10.2.3 Internal quality inspection. Nondestructive inspection shall be performed to ensure the weldment meets design requirements for Class A and Class B welds as applicable. Nondestructive inspection procedures and techniques shall be qualified. Qualification of NDE capability includes verification of detectability of critical flaw size. When reliability of inspection and critical flaw detection so dictate, redundant and/or complementing inspection techniques and procedures shall be employed.

4.10.2.4 Surface quality inspection. Nondestructive inspection shall be performed to ensure compliance with the surface quality requirements of the design drawing established per 4.8 for Class A and Class B welds. Nondestructive inspection procedures shall be qualified. Qualification of NDE capability includes verification of detectability of critical flaw size. When reliability of inspection and critical flaw detection so dictate, redundant and/or complementing inspection techniques and procedures shall be employed. Weldments which are machined, ground, or otherwise mechanically worked causing disruption or smearing of the material surface shall be etched to remove the masking material prior to penetrant application.

Provided by IHS
No reproduction or networking permitted without license from IHS
Licensee=NASA Technical Standards 4/9972545004, User=Garcia, Jaime
Not for Resale, 01/25/2010 11:01:49 MST

4.10.2.5 Records. A continuous audit of weldment production quality shall be maintained. Resulting records shall include, but not be limited to, the location of repairs, type of defects repaired, procedures used, and inches of repair per total inches of weld. These records shall be summarily accounted on a quarterly basis, with such accounting made available to the procuring agency upon request.

5. NOTES

(This section contains information of a general or explanatory nature that may be helpful but is not mandatory.)

5.1. Intended use. This standard provides weld guidelines and acceptance criteria for aerospace flight hardware.

5.2 Ordering data. Procurement documents shall specify the title, number, and date of this standard.

5.3 Changes. Requests for deviation from, or waiver of, applicable paragraphs of this specification shall be directed to the procuring agency together with supporting information.

5.4 Keyword listing

arc welding (AC)
high energy density welding (HEDW)
nondestructive evaluation (NDE)
procedure qualification record (PQR)
resistance welding (RW)
solid state welding (SSW)
welder performance qualification (WPQ)
welder procedure specification (WPS)

Provided by IHS
No reproduction or networking permitted without license from IHS
Licensee=NASA Technical Standards 4/9972545004, User=Garcia, Jaime
Not for Resale, 01/25/2010 11:01:49 MST