Requirements for a Wedged Etalon Multi-Beam Splitter (WEMBS)

This procurement action is to obtain a Wedged Etalon Multi-Beam Splitter (WEMBS) developed to obtain an array of diverging beams suitable for surface slope metrology application

Schematic sketch of a WEMBS, shown in Fig. 1, illustrates the application of the optic as a multiple beam splitter.

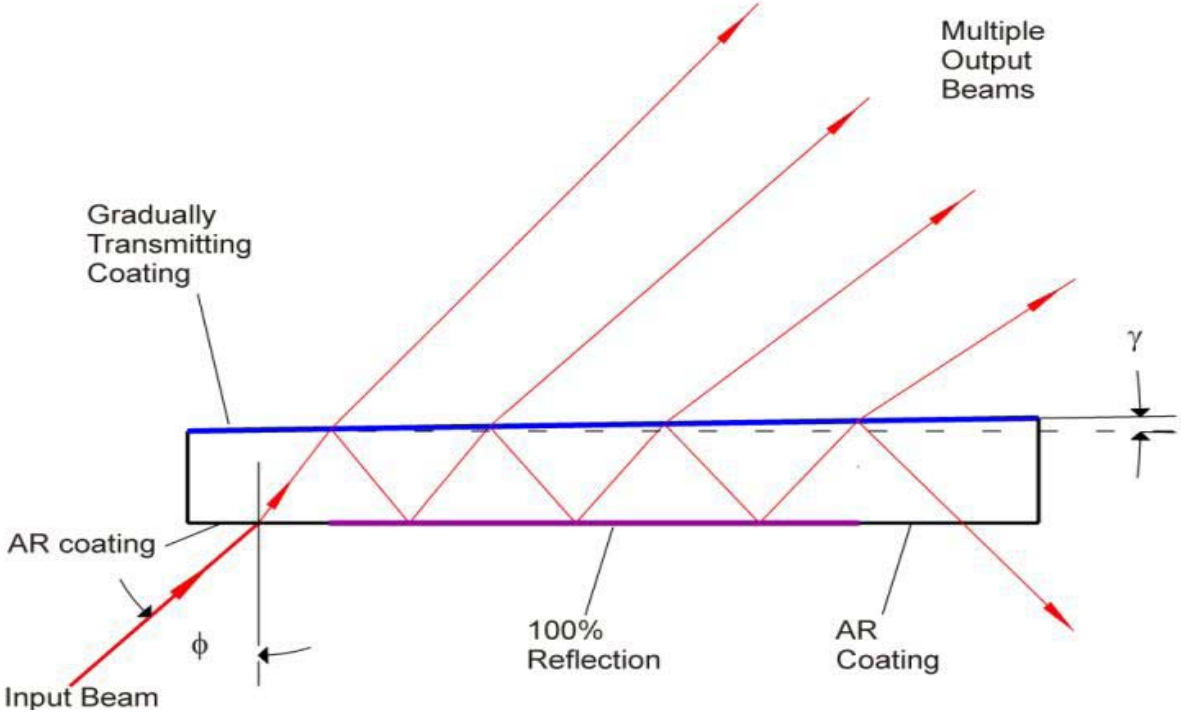

Figure 1: Schematic plot showing the application of the WEMBS as a multiple beam splitter.

The input beam at incidence angle φ≈49.5º refracts at the bottom plane of the wedged etalon, and then, partially refracts at the top plane with the major beam intensity reflecting inside the etalon. After multiple reflections inside the etalon, a number of output beams are generated.

Specially designed coatings on the top and bottom surfaces of the WEMBS (specified later) allow for the generating of multiple output beams with approximately equal intensities.

A small wedge angle provides a desired angular separation of the output beams.

Requirements for the Etalon:

Section 1: Specification of the substrate of the Wedged Etalon Multi-Beam Splitter

The sketches of the side and top views of the desired Wedged Etalon Multi-Beam Splitter are shown in Fig. 2. Fig. 2 specifies the WEMBS substrate geometry and corresponding tolerances.

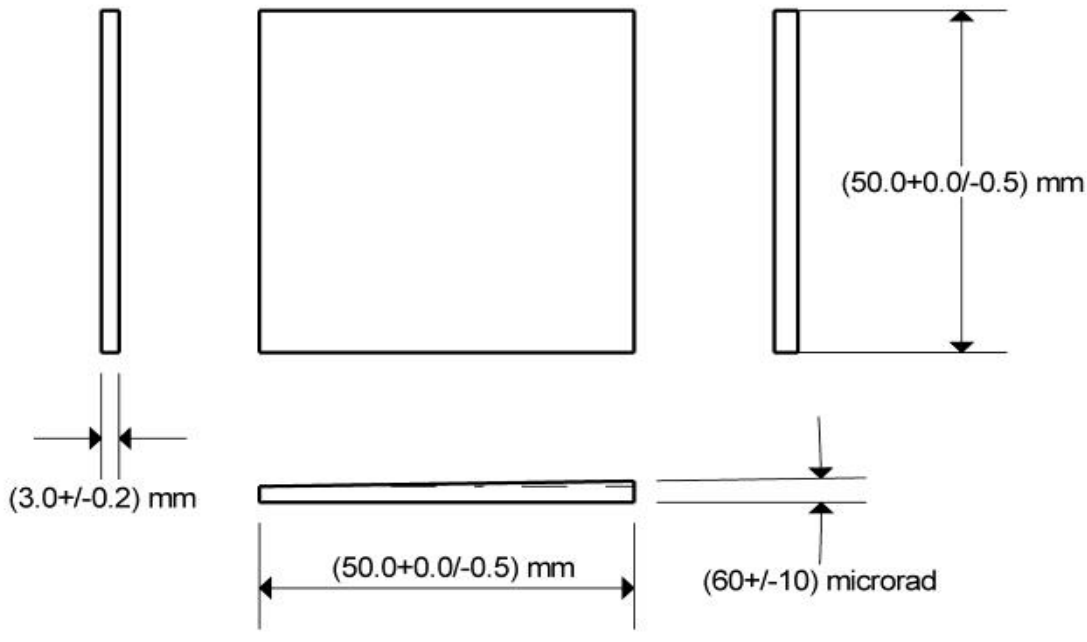

Figure 2: Side and top views of the substrate of the Wedged Etalon Multi-Beam Splitter (not to scale).

The substrate material for the WEMBS shall be a high quality optical transparent glass: Inclusion (Bubles) Class 0; Homogeneity Grade A; Striae less than Grade A of MIL-G-174-B; Refractive Index at 656.3 to be 1.4564 ± 1.00005 @ $18^o - 24^o$ C. Vendor will identify their choice of glass.

The flatness of the top and bottom surfaces shall be better than $\lambda/10$ P-V, with a goal of $\lambda/20$ over the clear aperture of 42x42 mm, $\lambda = 632$ nanometers

Micro roughness shall be ≤5 Angstroms, as measured over spatial frequency range from 10^{-3} μm^{-1} to 0.2 μm^{-1} (e.g., with an interferometric microscope with 5x objective).

Section 2: Specification of the coatings on the bottom surface of the WEMBS

Fig. 3 specifies the geometry of the coatings on the bottom surface of the WEMBS. Note that the orientation of the substrate in Fig. 3 corresponds to the one in Fig. 2.

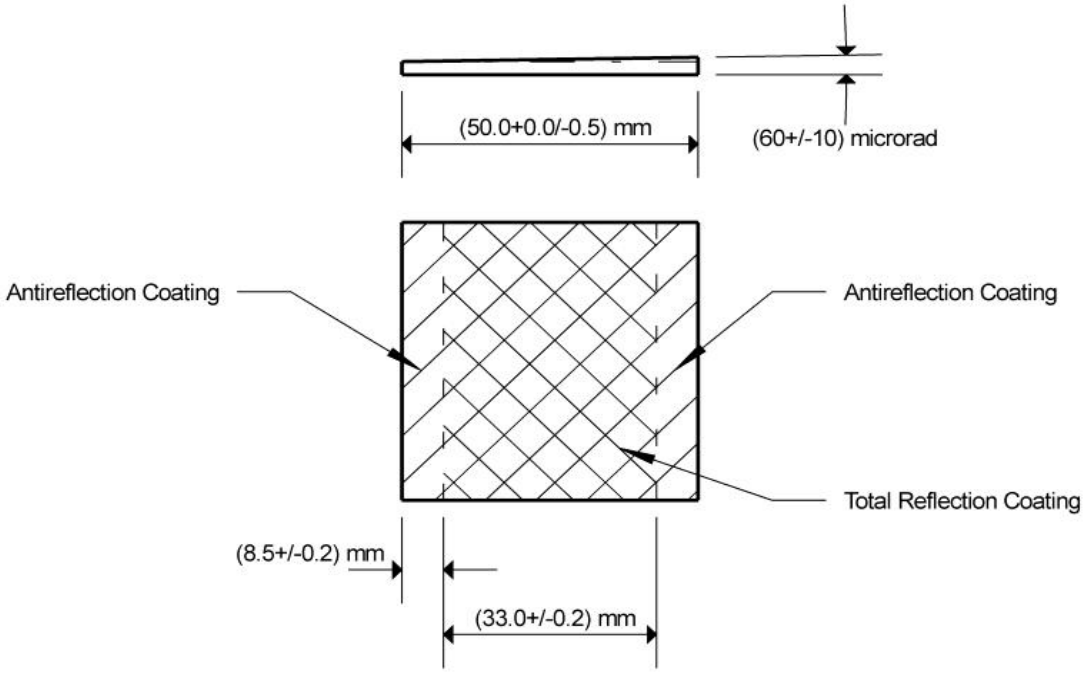

Figure 3: Coatings on the bottom surface of the Wedged Etalon Multi-Beam Splitter (not to scale

Antireflection (AR) coating on the left hand side of the etalon shall be optimize for the wavelength range of λ=670±50 nm, assuming the incidence angle of the input beam of φ=49.5º (as shown in Fig. 1). Reflection shall be ≤ 0.25% @ λ=670 nm.

AR coating on the right hand side of the etalon shall be optimized for the wavelength range of λ=670±50 nm, assuming incidence angle of the outgoing beam inside the etalon of θ=31.5º (as shown in Fig. 1). Reflection shall be ≤ 0.25% @ λ=670 nm.

Total reflection (TR) coating shall be optimized for the wavelength range of λ=670±50 nm, assuming the incidence angle (inside the substrate) of θ=31.5º (as shown in Fig. 1). An alternative coating scheme may be entertained for the TR coating specified.

Section 3: Specification of the gradually transmitting coating on the WEMBS top surface

Fig. 4 specifies the geometry of the gradually transmitting (GT) coating on the top surface of the WEMBS. Note that the orientation of the substrate in Fig. 4 corresponds to the one in Fig. 2.

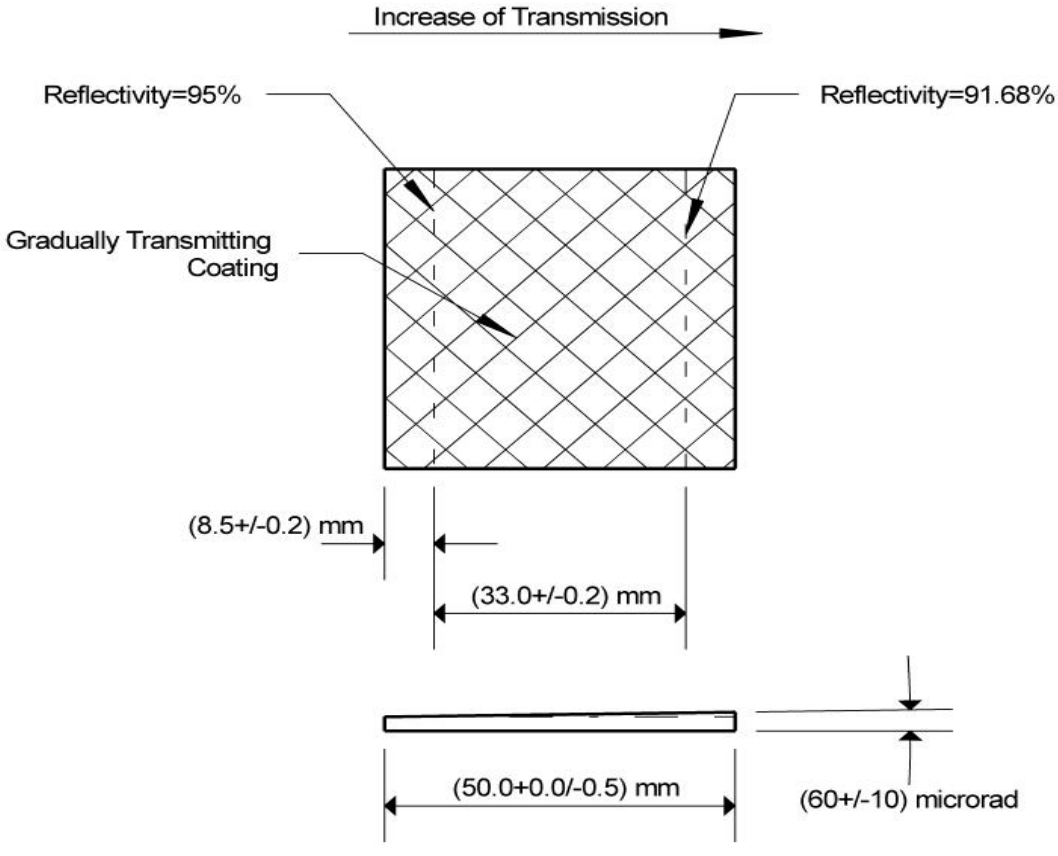

Figure 4: Gradually transmitting coating on the top surface of the Wedged Etalon Multi-Beam Splitter (not to scale).

Gradually transmitting coating shall be optimized for the wavelength range of λ=670±50 nm, assuming the incidence angle (inside the substrate) of θ=31.5º (as shown in Fig. 1).

Reflectivity of the gradually transmitting coating linearly decreases with a gradient of reflectivity of 1% per 10 mm of distance along the wedged side of the WEMBS.

Reflectivity of the gradually transmitting coating linearly decreases from 95.0% at the distance of 8.5 mm from the narrow edge of the WEMBS (position of the first output beam) to 91.68% at the position of the 10th output beam at the distance of 33 mm from the first beam (Fig. 4).

(An alternative approach is offered in Section 4.)

Section 4: Specification for distinct reflection zones on the WEMBS top surface (an alternate to GT coating)

If fabrication of the gradually transmitting coating specified previously cannot be met, a coating consisting of 10 distinct zones with corresponding reflections is a viable alternative.

Fig.5 specifies the geometry of 10 distinct reflection zones on the top surface of the WEMBS, numbered from 1 to 10. Note that the orientation of the substrate in Fig. 5 corresponds to the one in Fig. 2

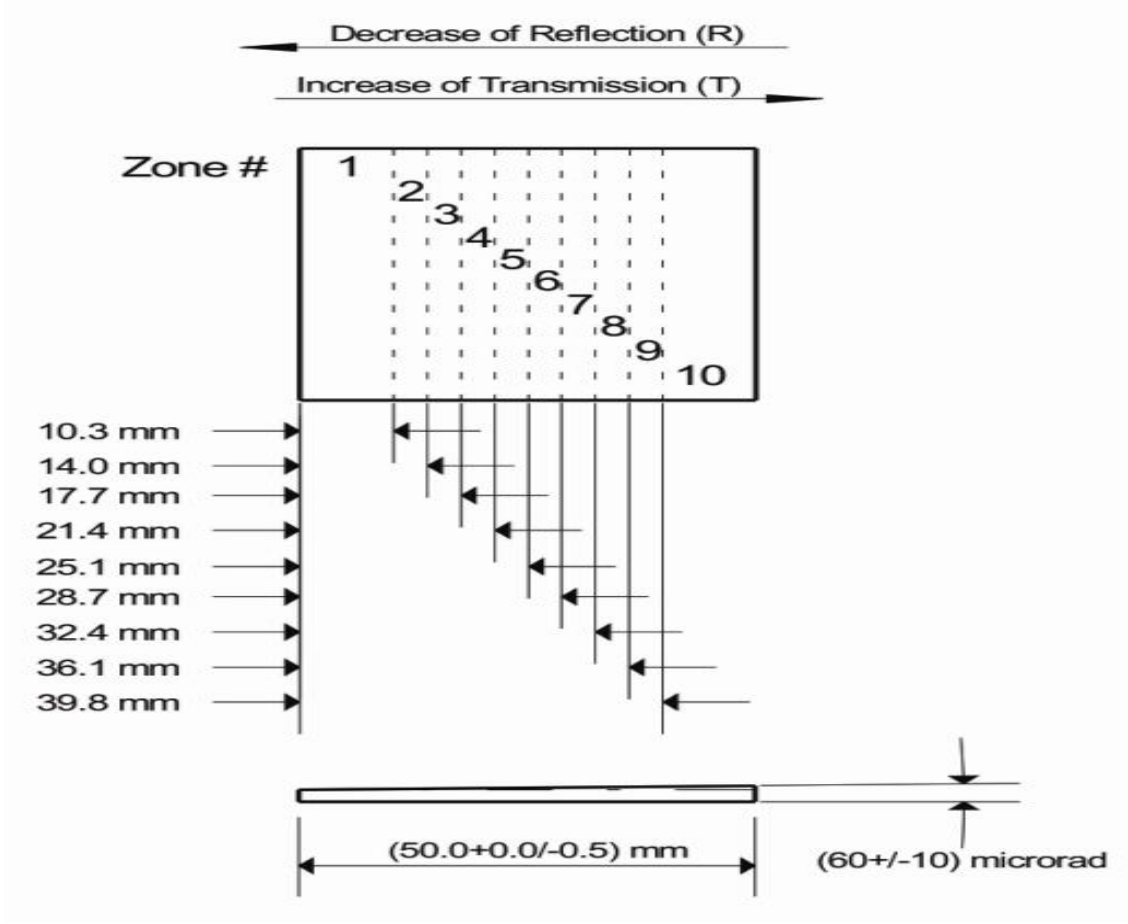

.
Figure 5: 10 distinct reflection zones on the top surface of the Wedged Etalon Multi-Beam Splitter (not to scale)

.
Reflections (transmissions) for the distinct reflection zones, depicted in Fig. 5, are specified in Table 1.

Table 1: Reflections and corresponding transmissions for the distinct reflection zones specified in Fig 5

Zone	1	2	3	4	5	6	7	8	9	10
R_Z %	93.33	92.86	92.31	91.67	90.91	90.00	88.89	87.50	85.71	83.33
T_Z %	6.67	7.14	7.69	8.33	9.09	10.00	11.11	12.50	14.29	16.67

Reflections (transmissions) tolerance to be ±0.1%.

Sample development and delivery

The vendor will provide a first piece to the Government for testing. With successful results, i.e., sample meets requirements of this procurement; the vendor will be authorized to manufacture 10 more units to be delivered to the Government.

Material certification will be provided by vendor.