Statement of Work
Refurbishment of 24" Dia. Gold Target
12/01/2010

The Astro-H Project requires the periodic refurbishment of gold targets used in the manufacture of x-ray reflector elements for the X-Ray Telescopes. This PR is for such refurbishment.

Work requirement:

Reclaim and replace gold on an existing hollow copper cylinder, nominally 24" inside diameter by 7" high. Gold shall be at least of purity 99.99% and 0.025" +/- 0.002" thick, bonded to the inside diameter surface of the copper substrate, covering the entire I.D. area.

Application of the gold foil shall conform to the instructions on GSFC drawing number GD1490496 revision D. The drawing is available in paper form or in PDF file format.

Reclaim gold from additional scrap materials including chamber scrapings and Scotch tape bearing gold.

Credit the cash value of all reclaimed gold to this order.

Deliverables:

1. Fabrication charges to remove and replace the gold on the copper shell.
2. Gold material for the new target coating.
3. Shipping charges.

Delivery schedule:

Vendor shall deliver the refurbished target to GSFC within 30 days of receipt of the spent target shell.

NOTES–
UNLESS OTHERWISE SPECIFIED:
1. REMOVE ALL BURRS AND SHARP EDGES, .010 R OR CHAMFER
2. FINISH– 63/ REQUIRED ALL OVER.
3. CLEAN AND DEGREASE ALL SURFACES
4. MATERIAL–ITEM 1= OHFC COPPER, .125 THICK.
5. MATERIAL–ITEM 2= GOLD, .025 THICK, 99.99% PURITY
6. ITEM –2 TO BE ONE CONTINUOUS SHEET PRIOR TO BONDING TO COPPER SHELL.
7. CONDUCTIVE EPOXY BOND OR INDIUM SOLDER

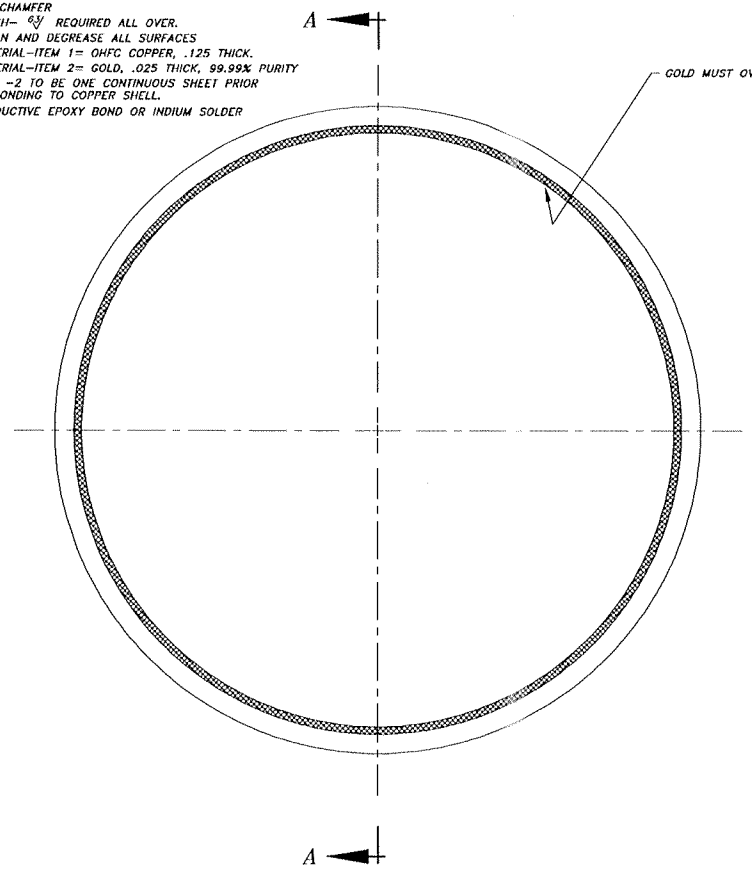

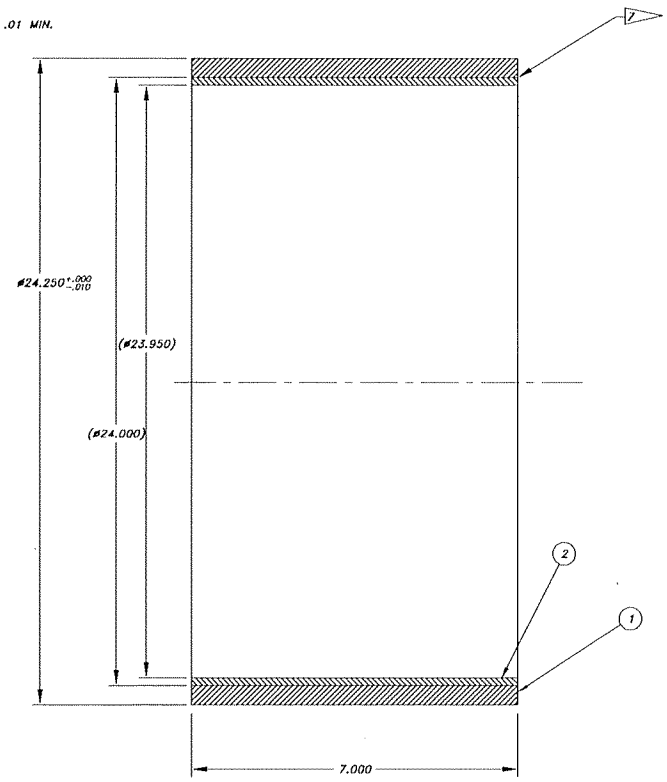

REVISIONS

SYM	DESCRIPTION	DATE	APPROVAL
A	REVISED MATERIAL CALLOUT IN NOTE 4	5-30-95	C.E.O.
B	CHANGED INDIUM SOLDER TO CONDUCTIVE EPOXY	9-21-95	C.E.O.
C	CHANGED ITEM-1 MATERIAL TO COPPER ONLY WITH NO GAP	8-19-96	C.E.O.
D	CHANGED BONDING SPEC. NOTE 7	12-11-97	C.E.O.

GD1490496
D

ITEM NO.	REQ'D	PART NO	DESCRIPTION	MATERIAL	MATERIAL SPECIFICATION	WEIGHT

LIST OF MATERIAL

NATIONAL AERONAUTICS AND SPACE ADMINISTRATION — Goddard Space Flight Center — GREENBELT, MARYLAND

UNLESS OTHERWISE SPECIFIED–DIMENSIONS ARE IN INCHES
TOLERANCES:
.XX ±.02 .XXX ±.005 ANGLES ±1° FRACTIONS ±1/32 125/
REMOVE ALL BURRS AND SHARP EDGES, .010 R OR CHAMFER MAX.

- ☐ FLIGHT HARDWARE/POST FAR HARDNESS TEST REQ'D.
- ☐ HARDNESS TEST NOT REQUIRED.
- ☐ TEST HARDNESS PER ASTM E-18, LOCATION OPTIONAL.
- ☐ TEST HARDNESS PER ASTM E-18 AT LOCATION INDICATED BY ⊙
- ☐ NO NON-DESTRUCTIVE EXAMINATION (NDE) REQ'D.
- ☐ NDE REQUIRED PER S-313-009 CODE_____

	NAME	INIT	DATE
DESIGNED	ODELL	CEO	12-11-97
DRAWN	PEREZ	AP	12-11-97
CHECKED	SHUMAN	SAS	12-11-97
APPROVED	SERLEMITSOS	CEO for PJS	12-11-97
APPROVED			
APPROVED–STRESS			
APPROVED–CHARACTER			

DRAWING INTERPRETED PER NPC-X673-64-1

24" GOLD SPUTTERING TARGET–

ASTRO–E G.S.E.

GD1490496 — REV. D

CODE 663 — SCALE NONE — TEST DATE 12-11-97 — SH 1 OF 1

THIS DRAWING WAS PRODUCED USING SOFTWARE AUTOCAD VERSION R13
FILE NAME D1490496.DWG

NEXT ASS'Y	USED ON
NONE	ASTRO–E G.S.E.