Drawing 1

6
5
4
3

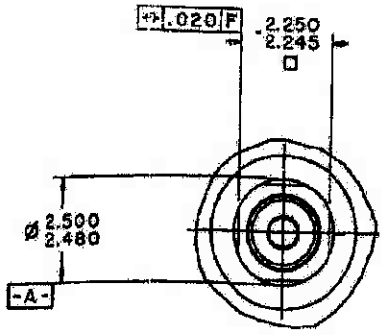
.020 F
2.250
2.245
ø 2.500
2.480
-A-

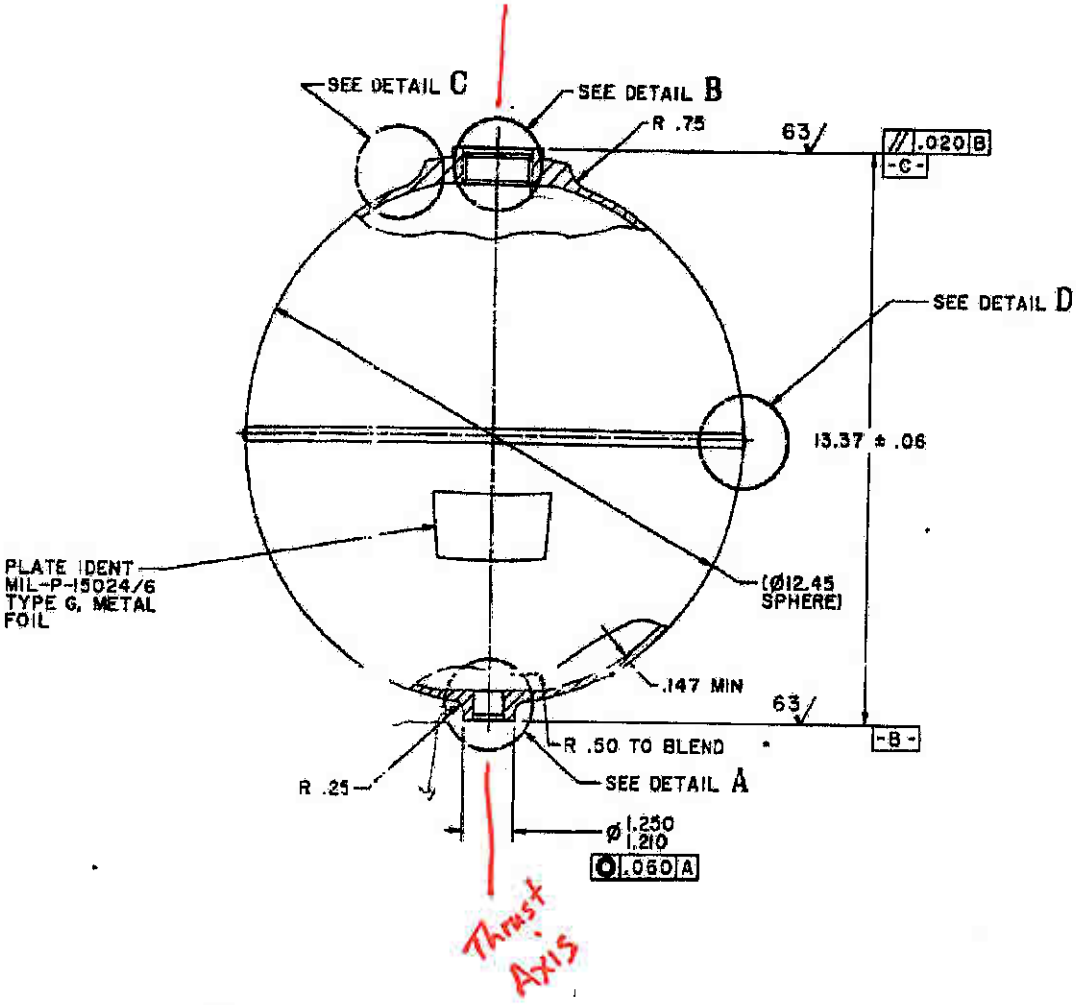
SEE DETAIL C
SEE DETAIL B
R .75
63
.020 B
-C-
SEE DETAIL D
13.37 ± .06
PLATE IDENT
MIL-P-15024/6
TYPE G, METAL
FOIL
(ø12.45
SPHERE)
.147 MIN
63
-B-
R .50 TO BLEND
R .25
SEE DETAIL A
ø 1.250
1.210
.060 A
Thrust
Axis

11. APPLICABLE STANDARDS:
DIMENSIONS & TOLERANCES ---------- MIL-STD-8
SURFACE ROUGHNESS ---------- ANSI B46.1
ABBREVIATIONS ---------- MIL-STD-12
THREAD DIMENSIONS, TOLERANCE AND
IDENTIFICATION SYMBOLS ---------- NBS HANDBOOK H28
WITH SUPPLEMENTS

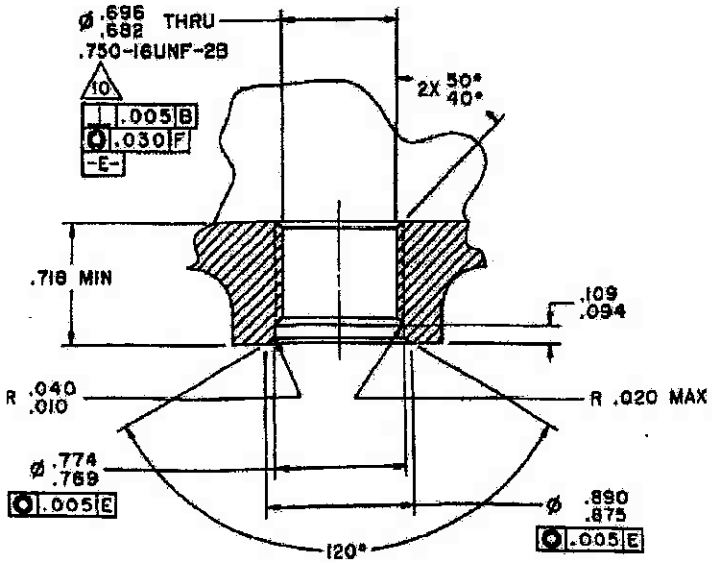

DETAIL A
SCALE: 2 / 1

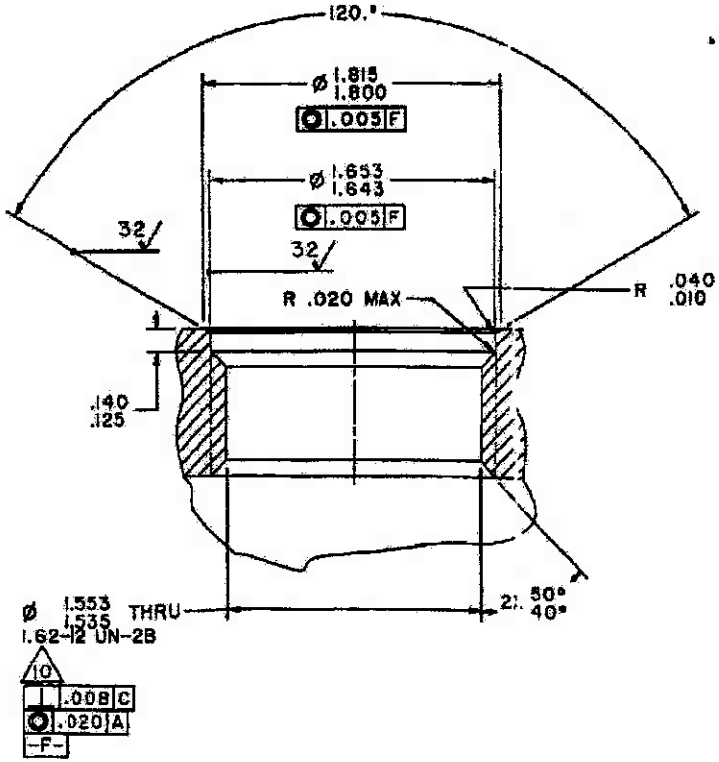

DETAIL B
SCALE: 2 / 1

Size Envelope

Drawing 2