REVISION HISTORY		
ZONE	REV	DESCRIPTION

1. MATERIAL: ALUMINUM 7075-T6, PER ASTM B211.
2. 64 Ra ALL OVER UNLESS OTHERWISE SPECIFIED.
3. UNLESS OTHERWISE SPECIFIED ALL FACES AND DIAMETERS MUST BE ⌖ .002 A B
4. ALL CORNER FILLETS TO BE .015-.020. UNLESS OTHERWISE SPECIFIED.
5. BREAK ALL EDGES .010-.020 UNLESS OTHERWISE SPECIFIED.
6. MINIMUM GRINDING RELIEF ON DIAMETER IS ACCEPTABLE IF NECESSARY TO ACHIEVE SPECIFIED DIMENSIONS.
7. ELECTROCHEMICAL ETCH DRAWING PART NUMBER 060928MRA957 ON SPECIFIED SURFACE, PER SAE-AS478, METHOD 7A, OR, LASER ETCH DRAWING PART NUMBER 060928MRA957 ON SPECIFIED SURFACE, PER SAE-AS478, METHOD 15B1. (SHALLOW ENGRAVE 0.0001-0.0006 DEEP). (ZONE C7)
8. CLEAR ANODIZE PER MIL-A-8625,TYPE 2, CLASS 1.
9. BEFORE SHIPPING, USE NEW AND CLEAN POLYETHYLENE BAG, OR 4 MIL THICK MINIMUM POLYETHYLENE SHEET SEALED WITH PACKAGING TAPE. MARK WITH DRAWING PART NUMBER 060928MRA957 ON TAG ATTACHED TO BAG.
10. TO BE BALANCED DYNAMICALLY BY NASA. SEE ASSEMBLY DRAWING NUMBER 060928MRA508 FOR DETAILS.

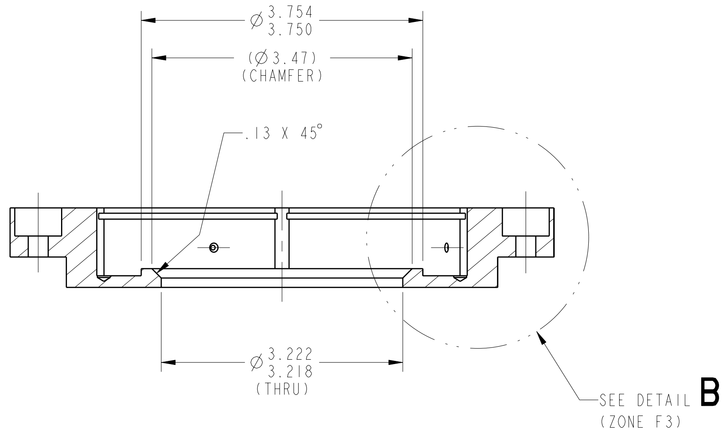

SECTION A-A

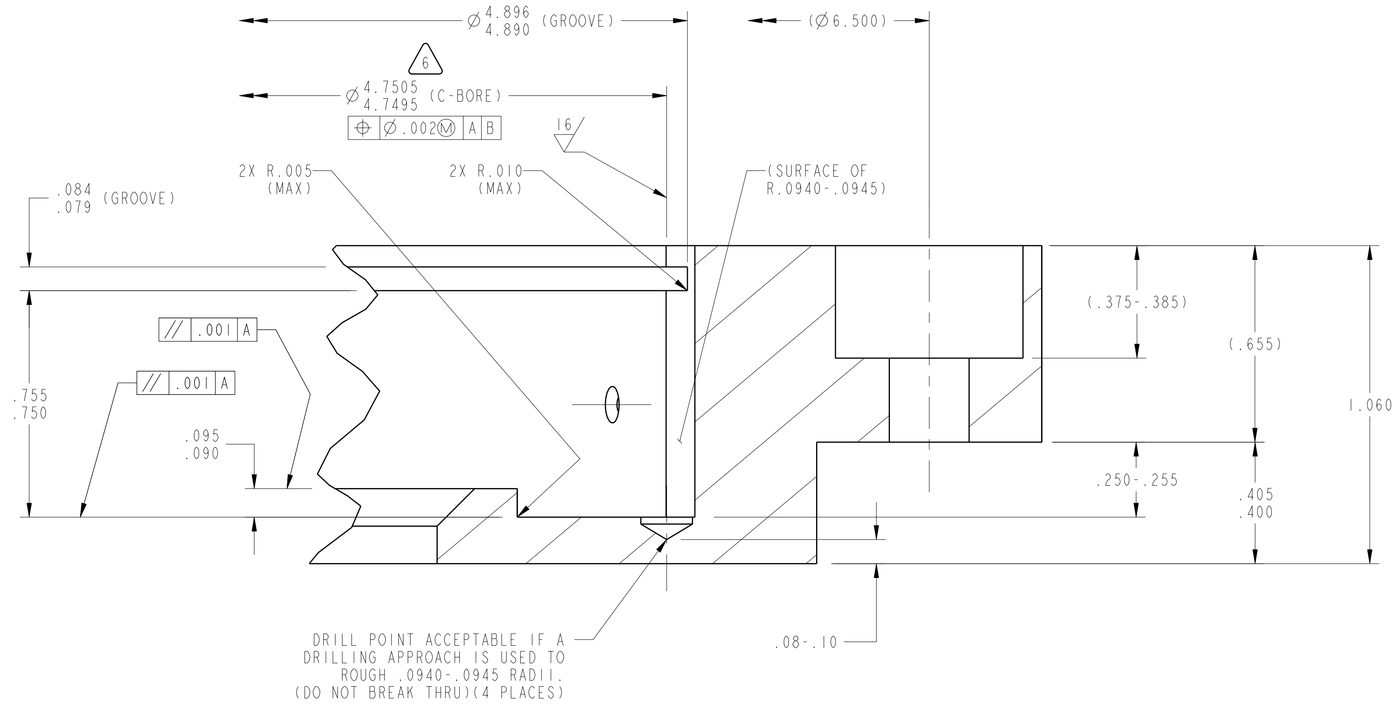

DETAIL B
SCALE 4/1

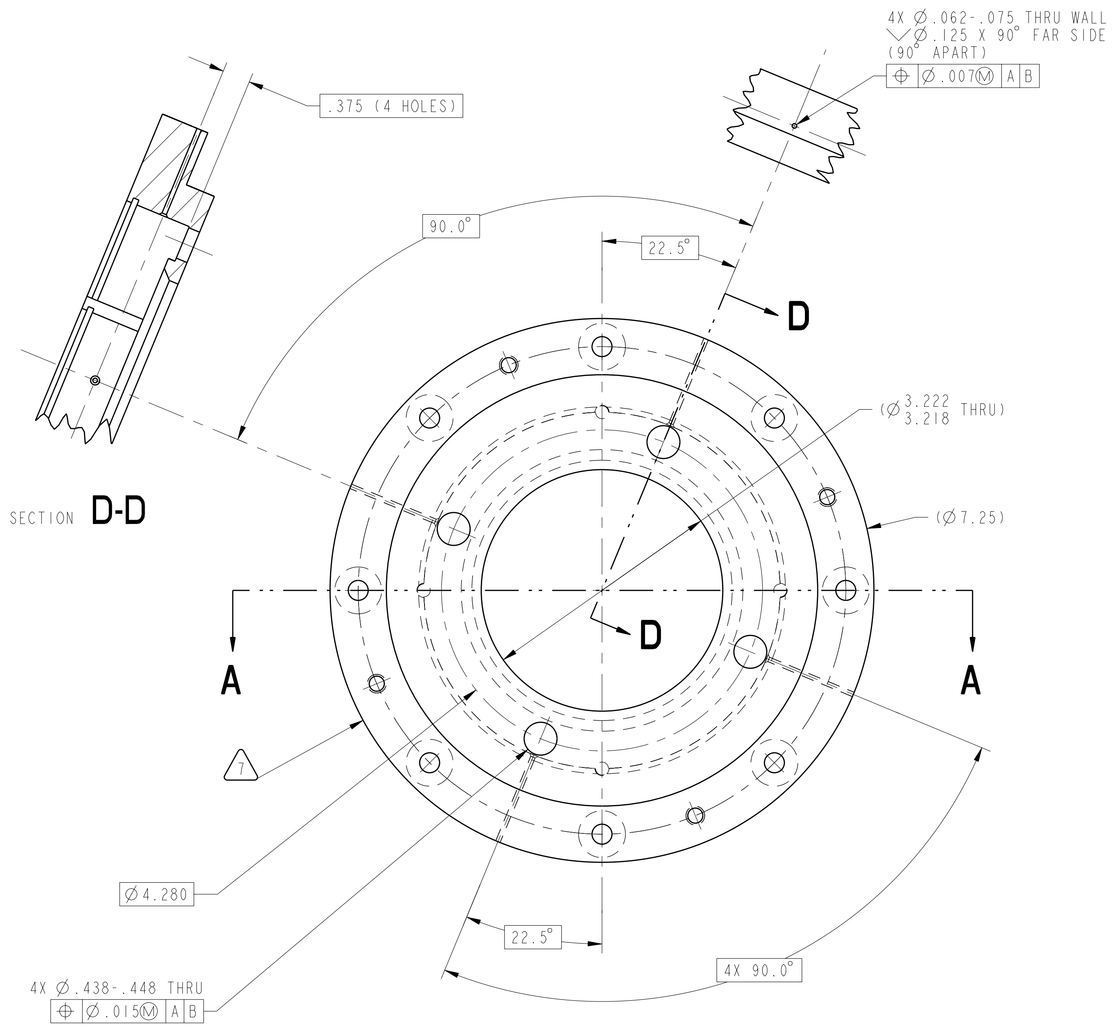

SECTION D-D

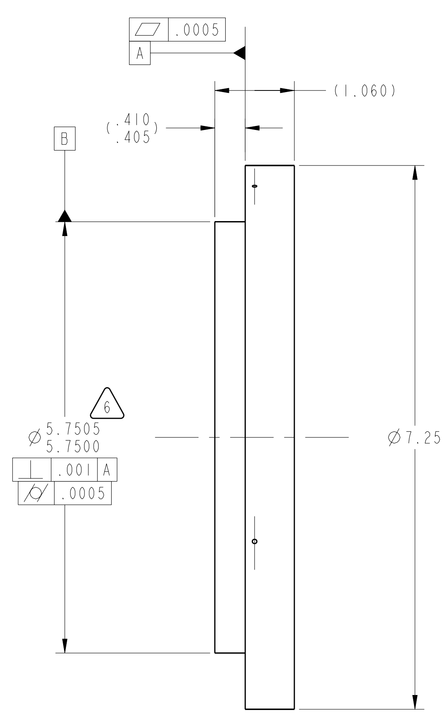

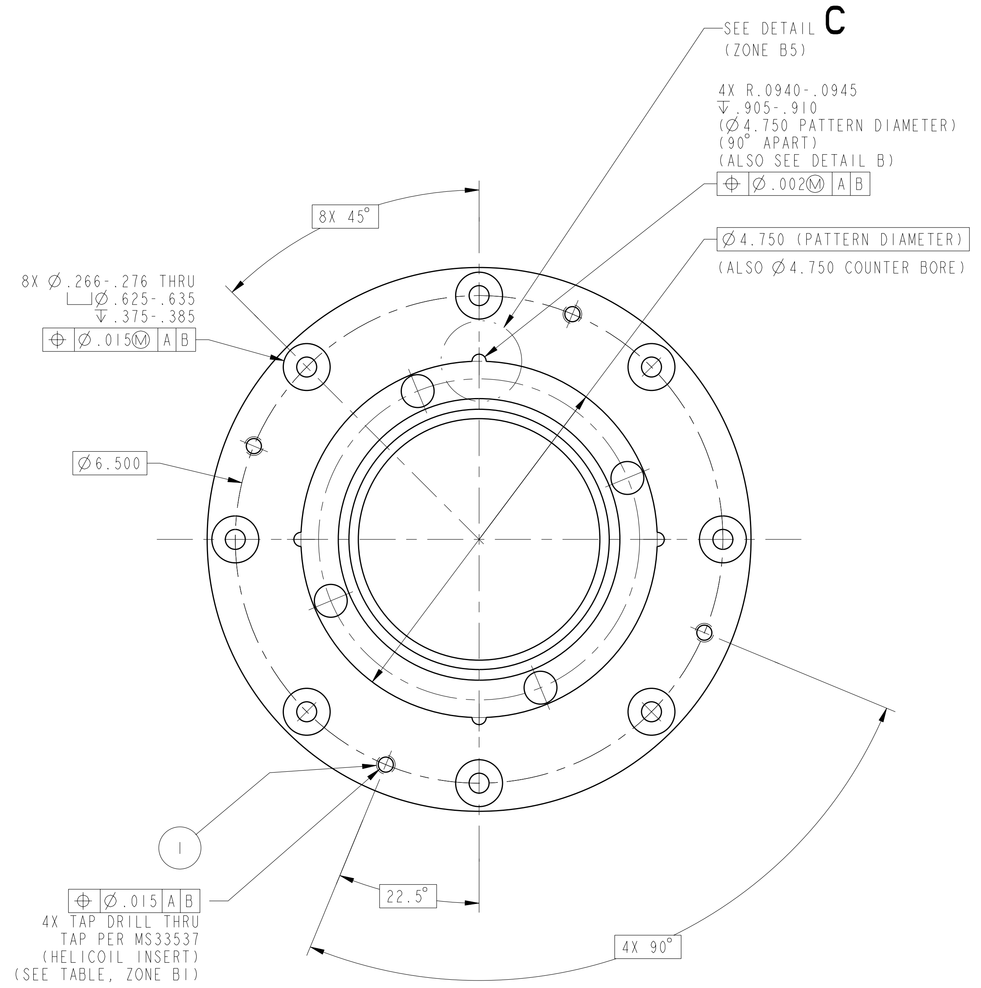

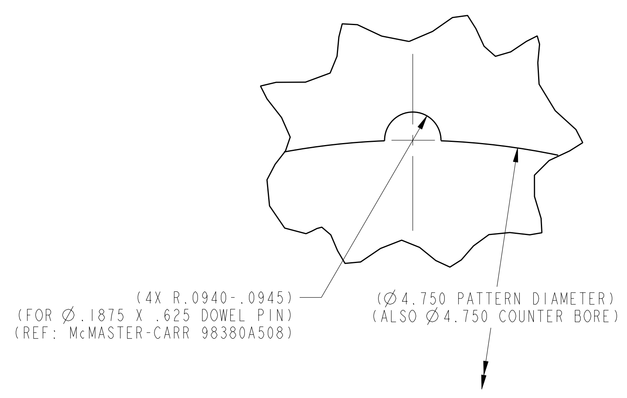

DETAIL C
SCALE 4/1

FIND NO	QTY REQD	PART OR IDENT NO	NOMENCLATURE OR DESCRIPTION
1	4	McMASTER-CARR #91990A261, (OR EQUIVALENT)	.250-20 UNC X .50 LONG, HELICOIL INSERT, #1185-4CN500. (FREE RUNNING)

PARTS LIST

060306MRA508	2-SPEED TRANS	UNLESS OTHERWISE SPECIFIED DIMENSIONS ARE IN INCHES X.X ± .03 X.XX ± .005 X.XXX ± .001 ANGLE ± .5° MACHINED SURFACES 63/.03 INTERPRET DIMENSIONS AND TOLERANCES PER ASME Y14.5M - 1994	DATE	2010/11/05
NEXT ASSY	USED ON		MODELER	DEZ / R. DETAMORE
APPLICATION			PRIMARY CONTACT	DER / M. STEVENS
			STATE	Released
		THIRD ANGLE PROJECTION	WINDCHILL PRODUCT	060928_Variable_Speed_Transmissio
			MODEL	A957_HUB_SPRAG

NATIONAL AERONAUTICS AND SPACE ADMINISTRATION
JOHN H. GLENN RESEARCH CENTER
LEWIS FIELD, CLEVELAND, OHIO

TITLE: HUB, SPRAG

SIZE	CAGE CODE	DWG NO	REV
E	1QFP5	060928MRA957	-

SCALE: 1/1 SHEET 1 OF 1

060928MRA957 SH 1 REV -

NAME:BERTAMORE OBRECT:A957_HUB_SPRAG DATE:08-Nov-10 13:16:51