1. MATERIAL: SAE/AISI 9310, AMS6265, VACUUM CONSUMABLE ELECTRODE REMELTED.

2. 32 Ra ALL OVER UNLESS OTHERWISE SPECIFIED.

3. HEAT TREAT REQUIREMENTS BEFORE FINISH MACHINING:
CASE HARDNESS: Rc 58-62,
CORE HARDNESS: Rc 28-32,
CASE DEPTH: .050-.080.

4. BREAK ALL EDGES .01-.02 UNLESS OTHERWISE SPECIFIED.

5. UNLESS OTHERWISE SPECIFIED ALL FACES AND DIAMETERS SHALL BE .0003 A B

6. TOLERANCE, FINISH AND EDGE BREAKS, AS REQUIRED, FOR OPTIMAL FIT WITH SPRAG. (BORG-WARNER #06763AM SPRAG, REF: ONE-WAY SPRAG CLUTCH 34 ELEMENT AS USED ON GM TURBO-HYDROMATIC 400 INTERMEDIATE SPRAG).

7. ELECTROCHEMICAL ETCH DRAWING PART NUMBER 060928MRA956 ON SPECIFIED SURFACE, PER SAE-AS478, METHOD 7A, OR, LASER ETCH DRAWING PART NUMBER 060928MRA956 ON SPECIFIED SURFACE, PER SAE-AS478, METHOD 15B1. (SHALLOW ENGRAVE 0.0001-0.0006 DEEP). (ZONE F2)

8. BEFORE SHIPPING, PROTECT WITH CONTAMINATION BARRIER SUCH AS WD-40, OR EQUIVALENT. USE NEW AND CLEAN POLYETHYLENE BAG FOR SMALL ITEMS, OR 4 MIL THICK MINIMUM POLYETHYLENE SHEET SEALED WITH PACKAGING TAPE. MARK WITH DRAWING PART NUMBER 060928MRA956 ON TAG ATTACHED TO BAG.

9. TO BE BALANCED DYNAMICALLY BY NASA. SEE NASA DRAWING NUMBER 060928MRA508 FOR BALANCE REQUIREMENTS.

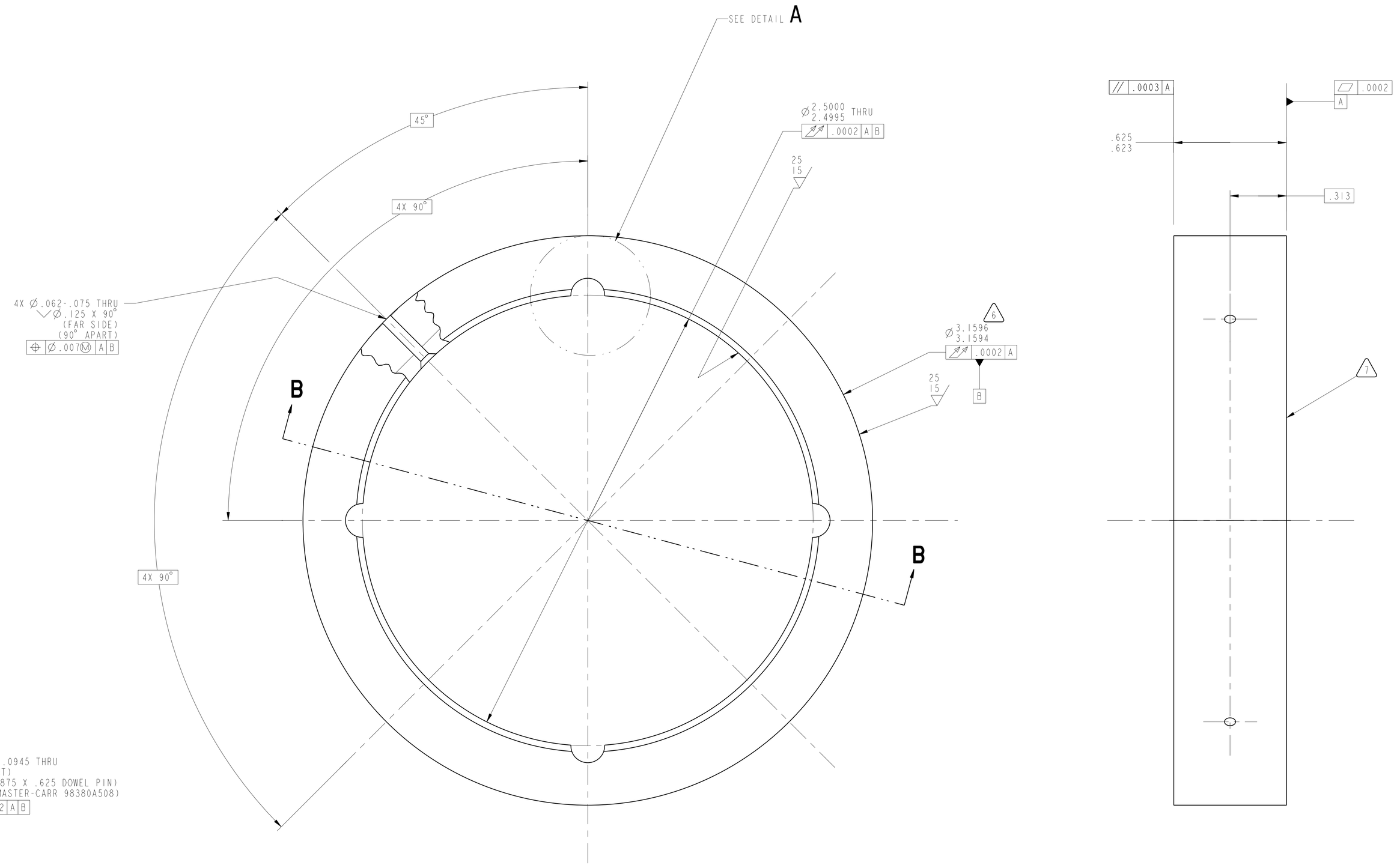

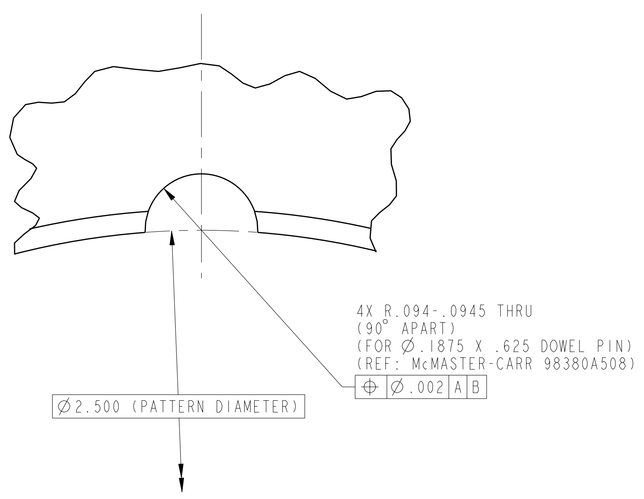

DETAIL A
SCALE 8/1

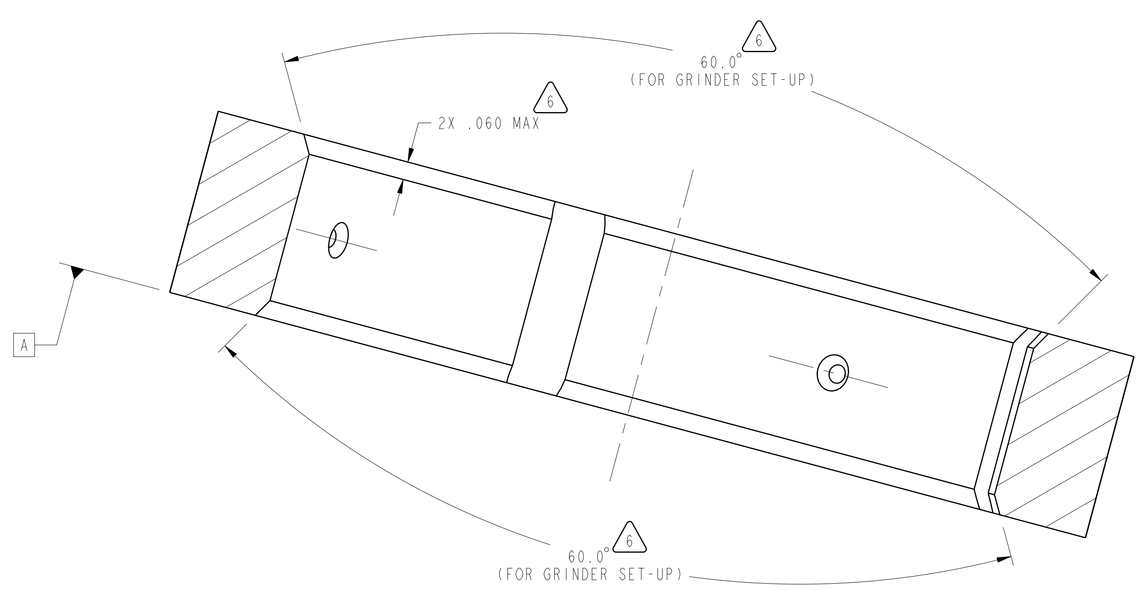

SECTION B-B

REVISION HISTORY		
ZONE	REV	DESCRIPTION

		UNLESS OTHERWISE SPECIFIED DIMENSIONS ARE IN INCHES X.X ± .03 X.XXX ± .005 X.XX ± .01 ANGLE ± .5° 63/.03 MACHINED SURFACES INTERPRET DIMENSIONS AND TOLERANCES PER ASME Y14.5M - 1994	DATE	2010/11/05
			MODELER	DEZ / R. DETAMORE
			PRIMARY CONTACT	DER / M. STEVENS
			STATE	Released
		THIRD ANGLE PROJECTION	WINDCHILL PRODUCT	060928_Variable_Speed_Transmissio
060928MRA508	2-SPEED TRANS		MODEL	A956_SPRAG_INNER-RACE
NEXT ASSY	USED ON			
APPLICATION				

NATIONAL AERONAUTICS AND SPACE ADMINISTRATION
JOHN H. GLENN RESEARCH CENTER
LEWIS FIELD, CLEVELAND, OHIO

TITLE: INNER-RACE, SPRAG

SIZE	CAGE CODE	DWG NO	REV
E	10FP5	060928MRA956	-

SCALE: 4/1 SHEET 1 OF 1

DWG NO 060928MRA956 SH 1 REV -

NAME:$DETAMOR OBJECT:A956_SPRAG_INNER-RACE DATE:08-Nov-10 13:01:50