1. MATERIAL: 4340 STEEL, SAE-AMS-6415S
2. 63Ra ALL OVER UNLESS OTHERWISE SPECIFIED.
3. HEAT TREAT: Rc 35-45 BEFORE FINISH MACHINING.
4. BREAK EDGES .010-.020 UNLESS OTHERWISE SPECIFIED.
5. ALL CORNER FILLETS TO BE .015-.020 UNLESS OTHERWISE SPECIFIED.
6. UNLESS OTHERWISE SPECIFIED ALL FACES ALL DIAMETERS SHALL BE ⌭ .002 A-B
7. IDENTIFIY BY BAGGING AND TAGGING WITH DRAWING NUMBER 060928MRA853, PER SAE-AS478, METHOD 35D.
8. TO BE BALANCED DYNAMICALLY BY NASA. SEE ASSEMBLY DRAWINGS NUMBER 060928MRA820 FOR DETAILS.

REVISION HISTORY		
ZONE	REV	DESCRIPTION
C2	A	Ø1.160 X .60 WIDE UNDERCUT ON THE Ø1.18115 WAS REMOVED. 2010/10/19

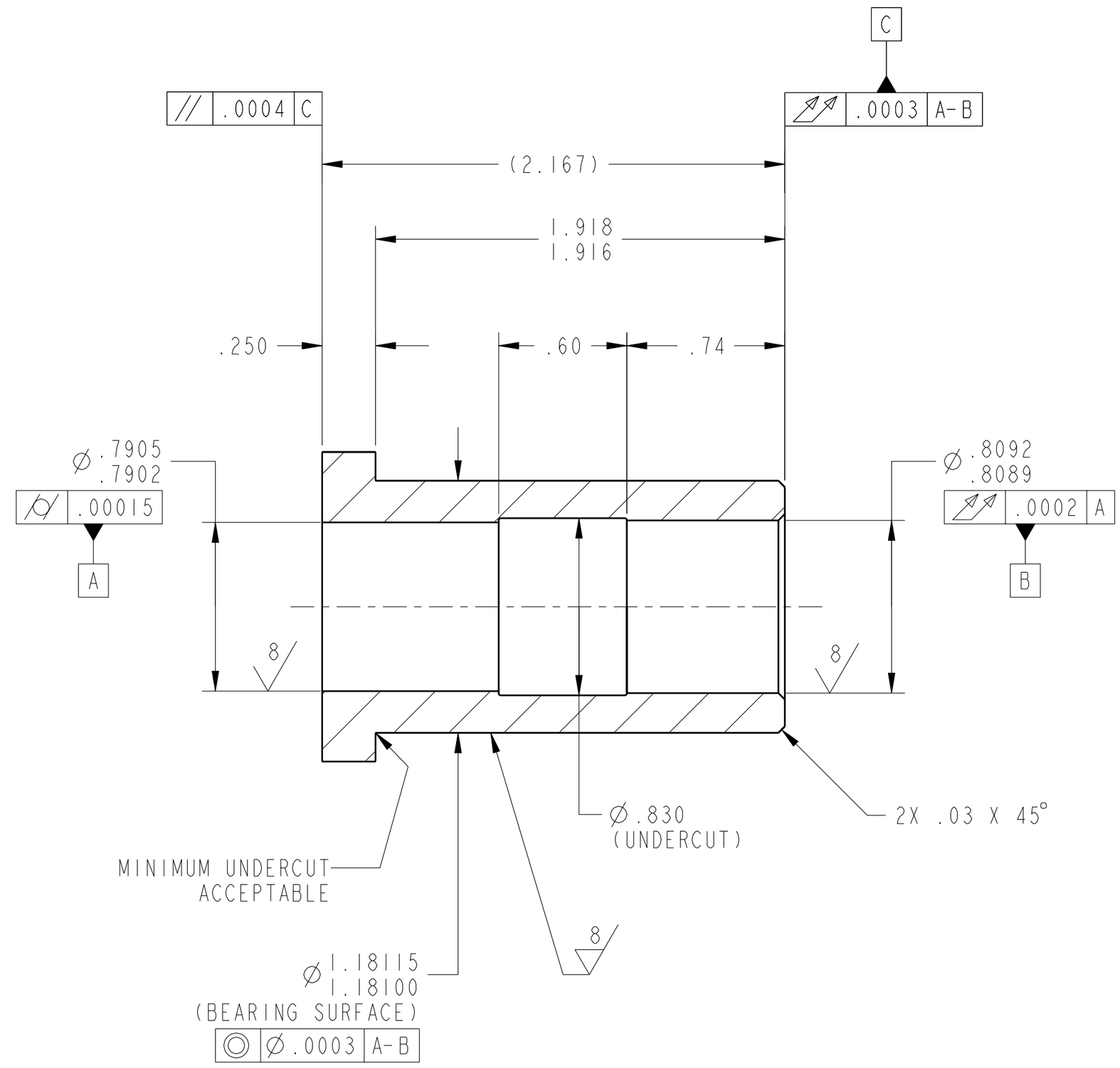

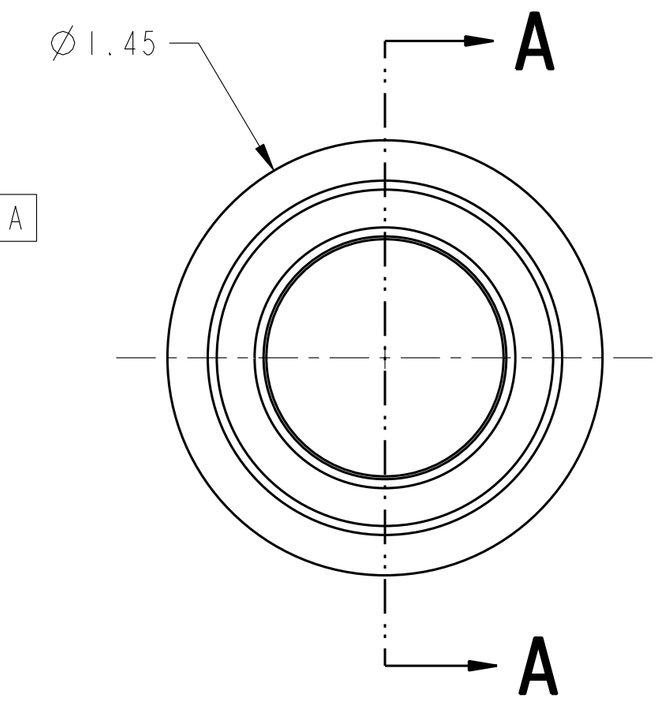

SECTION **A-A**

		UNLESS OTHERWISE SPECIFIED DIMENSIONS ARE IN INCHES X.X ± 0.03 X.XXX ± 0.005 X.XX ± 0.01 ANGLE ± 0.5° MACHINED SURFACES 63 .03 INTERPRET DIMENSIONS AND TOLERANCES PER ASME Y14.5M - 1994	DATE	2010/10/19
			MODELER	DEZ/L. SPINELLI
			PRIMARY CONTACT	DER/M. STEVENS
			STATE	Released
		THIRD ANGLE PROJECTION	WINDCHILL PRODUCT	060928_Variable_Speed_Transmissio
060928MRA820	2-SPEED TRANS			
NEXT ASSY	USED ON		MODEL	A853_SLEEVE_CLUTCH
APPLICATION				

NATIONAL AERONAUTICS AND SPACE ADMINISTRATION
JOHN H. GLENN RESEARCH CENTER
LEWIS FIELD, CLEVELAND, OHIO

TITLE
SLEEVE, CLUTCH

SIZE	CAGE CODE	DWG NO	REV
C	1QFP5	060928MRA853	A

SCALE: 2/1 SHEET 1 OF 1

DWG NO 060928MRA853 SH 1 REV A

NAME:RDETAMOR OBJECT:A853_SLEEVE_CLUTCH DATE:19-Oct-10 12:55:53