1. MATERIAL: ALUMINUM 7075-T6, PER ASTM B211.

2. 64 Ra ALL OVER UNLESS OTHERWISE SPECIFIED.

3. UNLESS OTHERWISE SPECIFIED ALL FACES AND DIAMETERS MUST BE ⌭ .002 A B

4. ALL CORNER FILLETS TO BE .015-.020. UNLESS OTHERWISE SPECIFIED.

5. BREAK ALL EDGES .010-.020 UNLESS OTHERWISE SPECIFIED.

6. ELECTROCHEMICAL ETCH DRAWING PART NUMBER 060928MRA842 ON SPECIFIED SURFACE, PER SAE-AS478, METHOD 7A, OR, LASER ETCH DRAWING PART NUMBER ON SPECIFIED SURFACE, PER SAE-AS478, METHOD 15B1. (SHALLOW ENGRAVE 0.0001-0.0006 DEEP). (ZONE F2)

7. CLEAR ANODIZE PER MIL-A-8625,TYPE 2, CLASS 1.

8. BEFORE SHIPPING, USE NEW AND CLEAN POLYETHYLENE BAG, OR 4 MIL THICK MINIMUM POLYETHYLENE SHEET SEALED WITH PACKAGING TAPE. MARK WITH DRAWING PART NUMBER 060928MRA842 ON TAG ATTACHED TO BAG.

9. TO BE BALANCED DYNAMICALLY BY NASA. SEE ASSEMBLY DRAWING NUMBER 060928MRA508 FOR DETAILS.

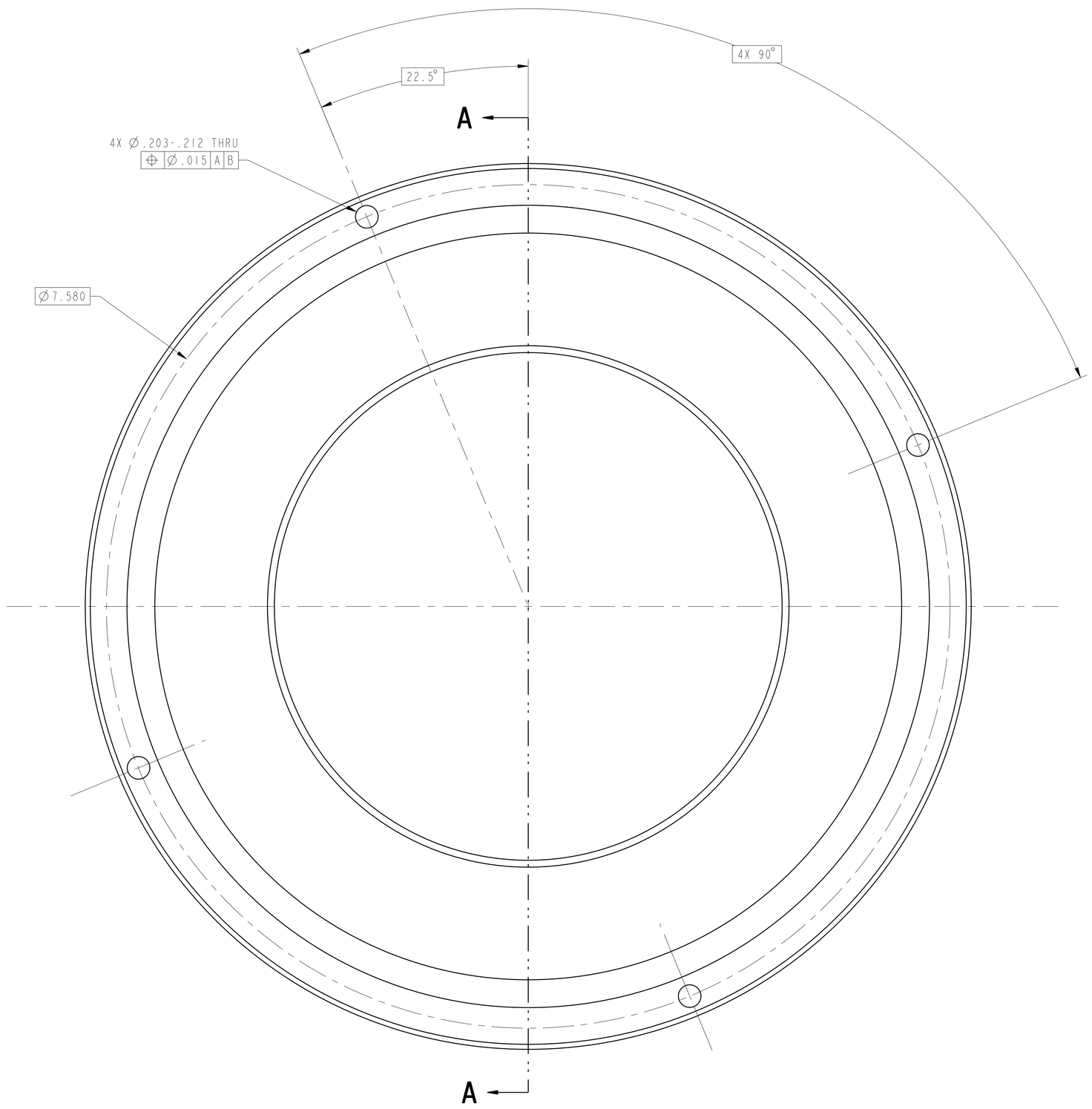

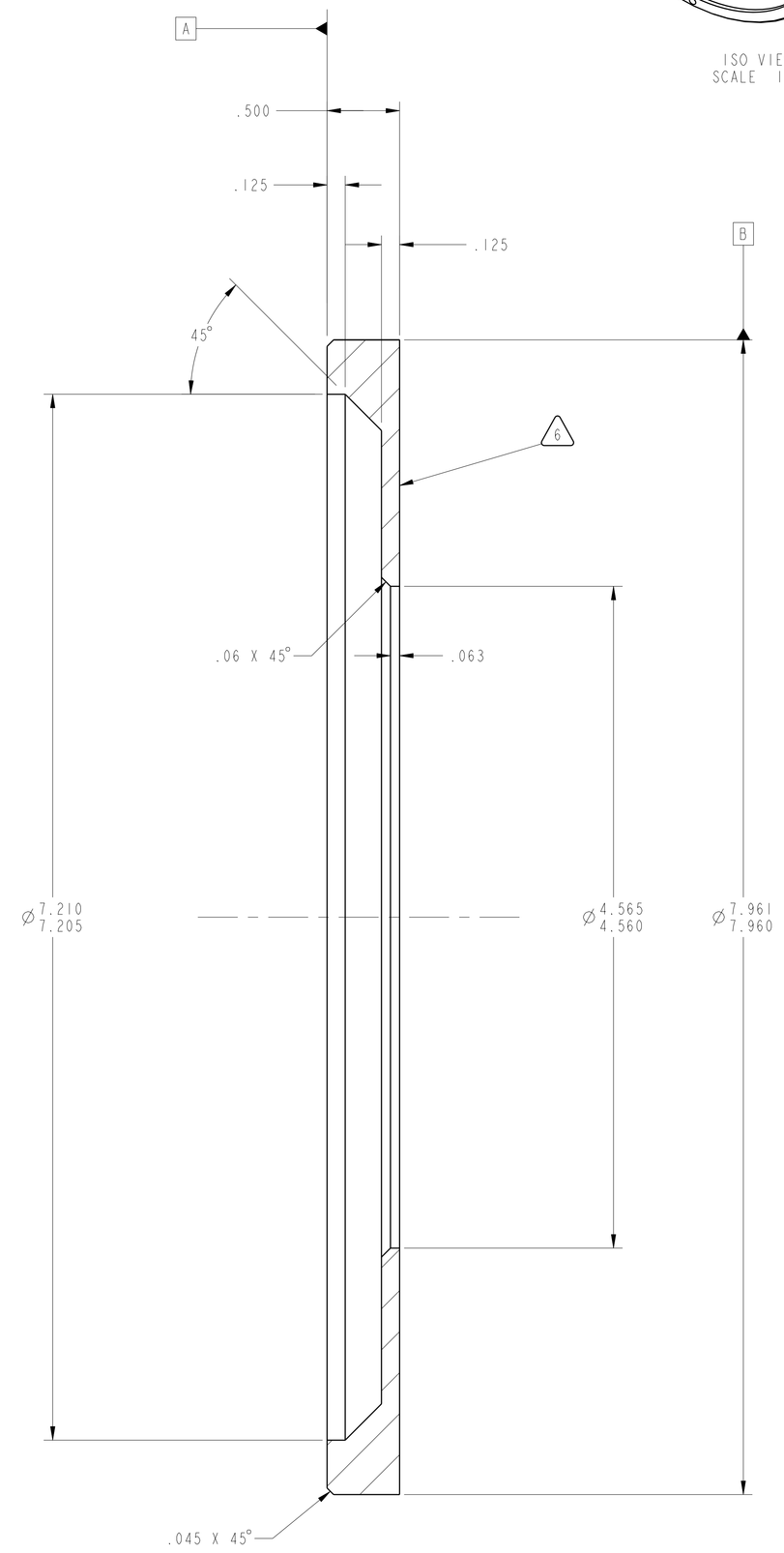

SECTION **A-A**

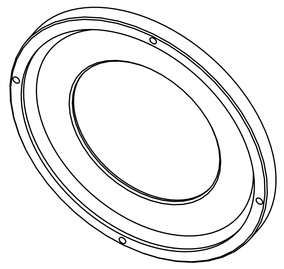

ISO VIEW
SCALE 1/2

REVISION HISTORY		
ZONE	REV	DESCRIPTION

		UNLESS OTHERWISE SPECIFIED DIMENSIONS ARE IN INCHES X.X ± .03 X.XXX ± .005 X.XX ± .01 ANGLE ± .5° MACHINED SURFACES 63 INTERPRET DIMENSIONS AND TOLERANCES PER ASME Y14.5M - 1994	DATE 2010/11/23	NATIONAL AERONAUTICS AND SPACE ADMINISTRATION JOHN H. GLENN RESEARCH CENTER LEWIS FIELD, CLEVELAND, OHIO
			MODELER DEZ/R. DETAMORE	
			PRIMARY CONTACT DER/M. STEVENS	TITLE SHIELD, OIL
			STATE Released	
		THIRD ANGLE PROJECTION	WINDCHILL PRODUCT	
060928MRA508	2-SPEED TRANS		060928_Variable_Speed_Transmissio	SIZE E / CAGE CODE 1QFP5 / DWG NO 060928MRA842 / REV -
NEXT ASSY	USED ON		MODEL A842_SHIELD_OIL	
APPLICATION				SCALE:2/1 / SHEET 1 OF 1

DWG NO 060928MRA842 SH 1 REV -

NAME:ROETMAOR OBJECT:A842_SHIELD_OIL DATE:23-Nov-10 14:34:21