1. MATERIAL: 4340 STEEL, SAE AMS 6415S.

2. PRIOR TO FABRICATION, MATERIAL MUST PASS ULTRASONIC INSPECTION PER SAE-AMS-2154, TYPE I (IMMERSION), CLASS A.

3. HEAT TREAT: Rc 38-42 BEFORE FINISH MACHINING.

4. 64 Ra ALL OVER UNLESS OTHERWISE SPECIFIED.

5. BREAK ALL EDGES .010-.020 UNLESS OTHERWISE SPECIFIED.

6. ALL CORNER FILLETS TO BE R.015-.020 UNLESS OTHERWISE SPECIFIED.

7. MINIMUM GRINDING RELIEF ON DIAMETER IS ACCEPTABLE IF NECESSARY TO ACHIEVE SPECIFIED DIMENSIONS.

8. RELIEF FOR THREADING, IF NECESSARY, SHALL NOT EXCEED WIDTH OF TWO THREADS AND DIAMETER SHALL NOT BE LESS THAN .015 SMALLER THAN MINOR DIAMETER.

9. ALL FILLETS MUST BLEND WITH ADJOINING SURFACES WITH NO UNDERCUTS AND MUST BE POLISHED SMOOTH WITH NO VISIBLE TOOL MARKS.

10. UNLESS OTHERWISE SPECIFIED, ALL FACES AND DIAMETERS MUST BE ⌯ .002 A-B

11. FINISHED PART MUST PASS DYE PENETRANT INSPECTION PER ASTM-E1417 TYPE I, METHOD A, SENSITIVITY LEVEL 2. ACCEPTANCE PER MIL-STD-1907, GRADE C. REMOVAL OF DEFECTS BY GRINDING OR POLISHING SHALL BE WITHIN DIMENSIONAL TOLERANCES.

12. ELECTROCHEMICAL ETCH DRAWING PART NUMBER 060928MRA514 ON SPECIFIED SURFACE, PER SAE-AS478, METHOD 7A, OR, LASER ETCH DRAWING PART NUMBER ON SPECIFIED SURFACE, PER SAE-AS478, METHOD 15B1. (SHALLOW ENGRAVE 0.0001-0.0006 DEEP). (ZONE E5)

13. BEFORE SHIPPING, PROTECT WITH CONTAMINATION BARRIER SUCH AS WD-40 OR EQUIVALENT. USE NEW AND CLEAN POLYETHYLENE BAG FOR SMALL ITEMS, OR 4 MIL THICK MINIMUM POLYETHYLENE SHEET SEALED WITH PACKAGING TAPE. MARK WITH DRAWING PART NUMBER 060928MRA514 ON TAG ATTACHED TO BAG.

14. TO BE BALANCED DYNAMICALLY BY NASA. SEE ASSEMBLY DRAWING NUMBER 060928MRA505 FOR DETAILS.

| REVISION HISTORY | | |
|---|---|---|
| ZONE | REV. | DESCRIPTION |
| C2 | A | 2010/11/18<br>1)ADDED (6) HOLES. (ZONE D2) Ø.125 THRU WITH .190-24 UNC-2B X .313 DEEP THREAD.<br>2)INCREASED DEPTH (ZONE B3) ↧1.938-2.000 WAS ↧.880-1.000 |

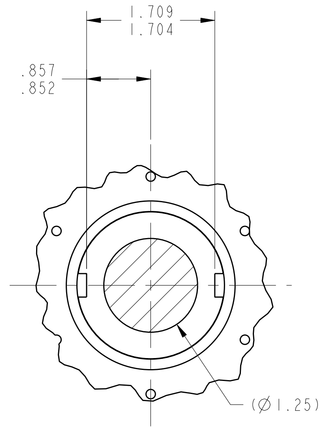


SECTION F-F

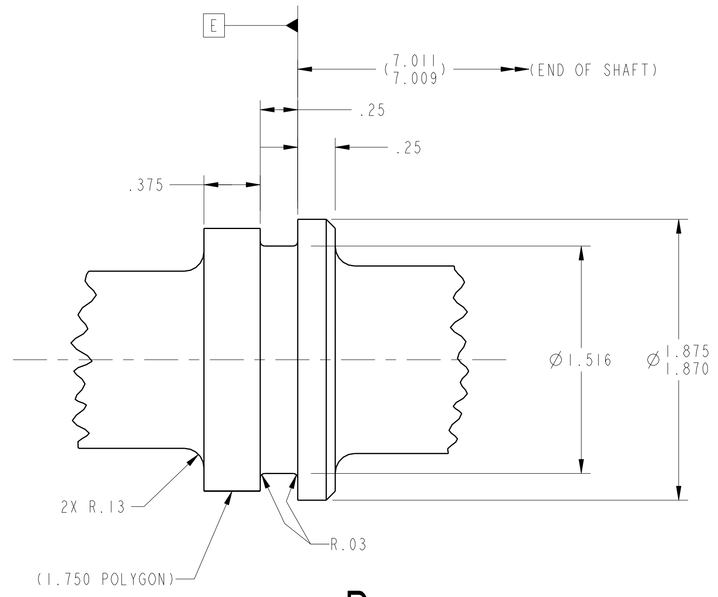


DETAIL D
SCALE 2/1

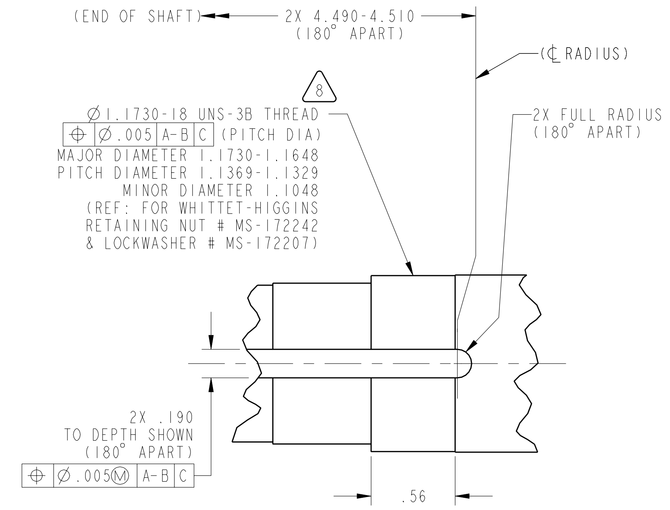


DETAIL E
SCALE 2/1

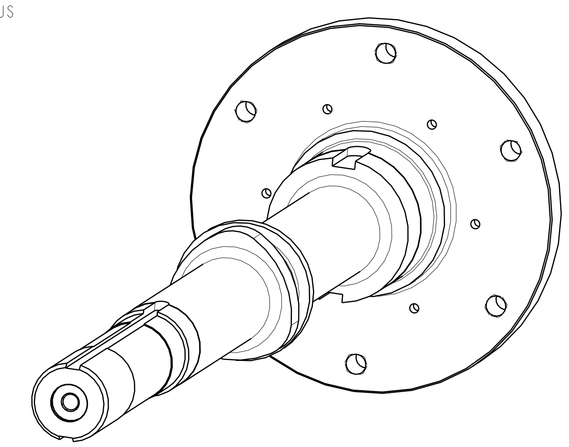

ISO VIEW
SCALE 1/1

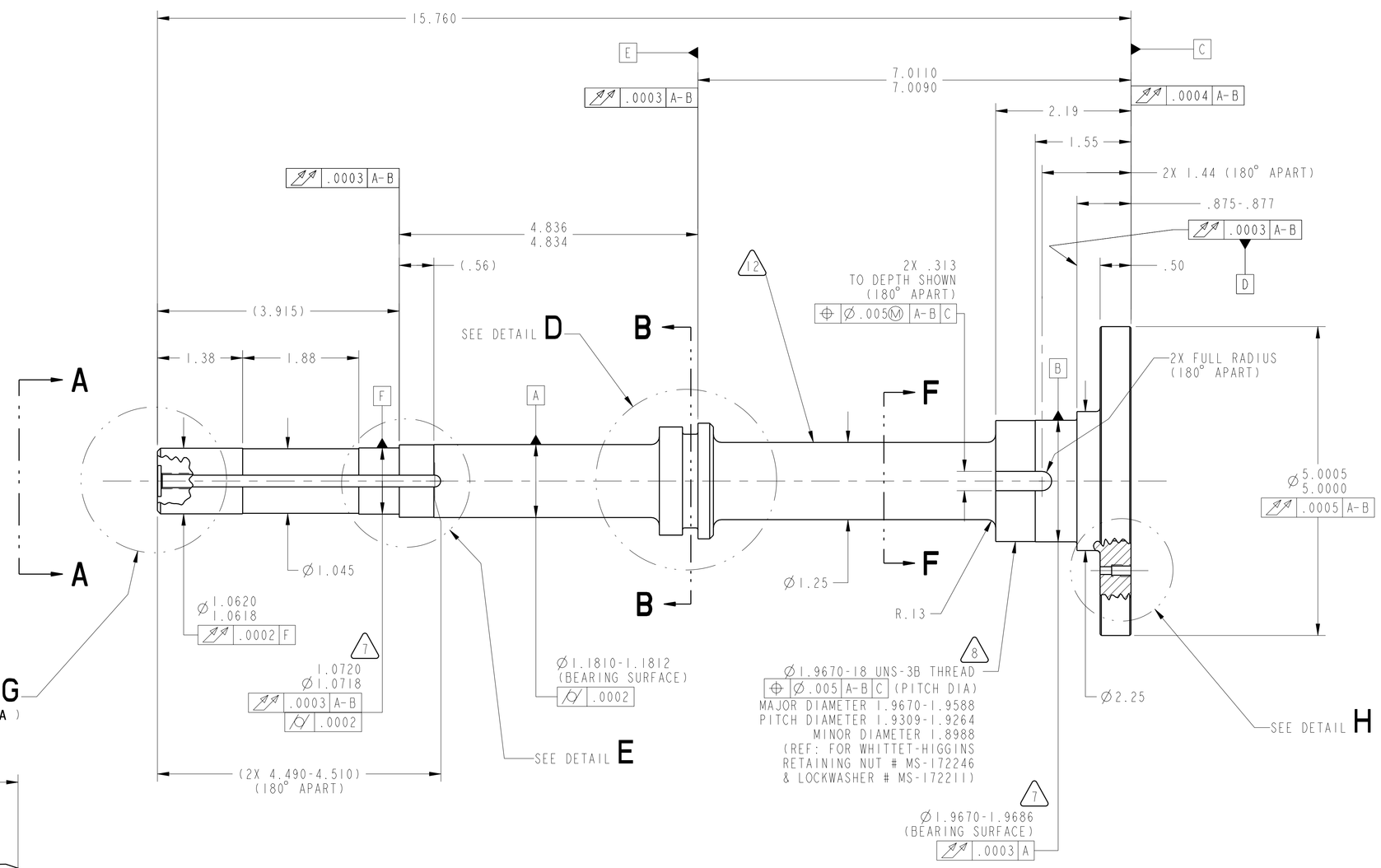


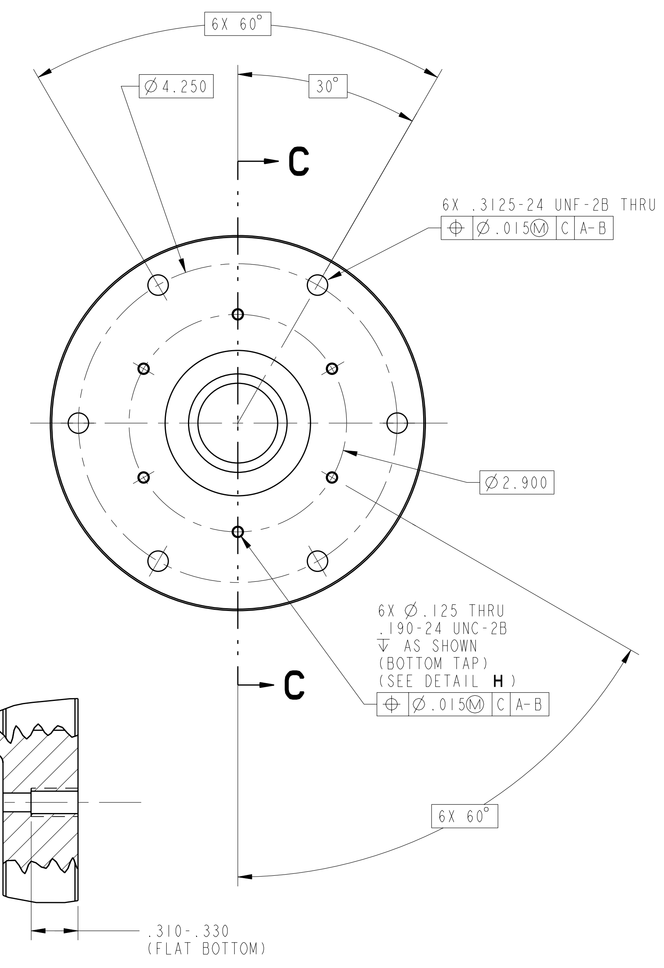


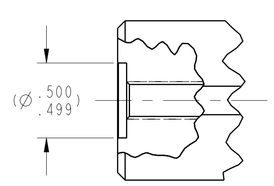


DETAIL G
SCALE 2/1

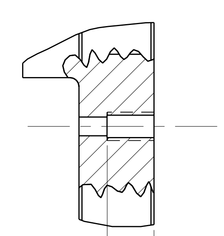


DETAIL H
SCALE 2/1

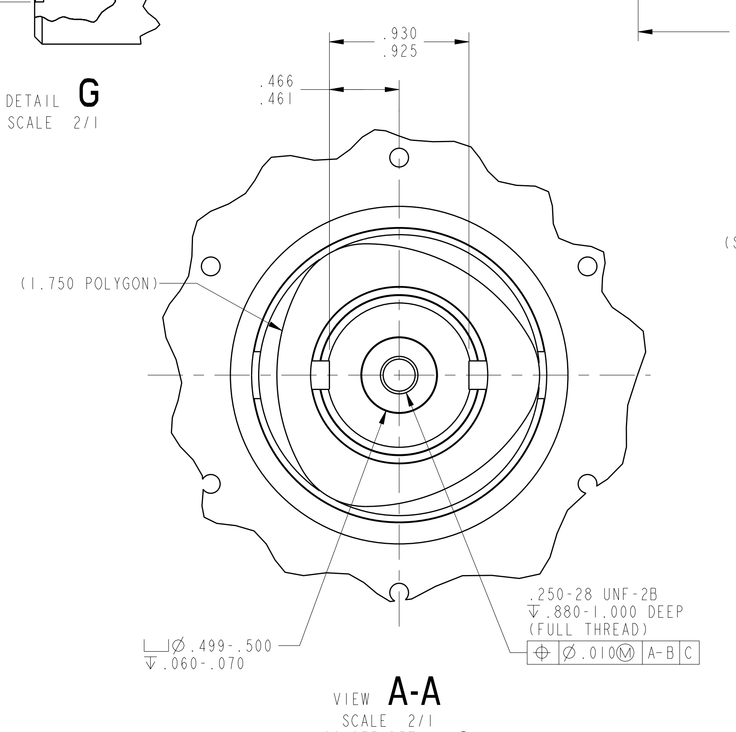


VIEW A-A
SCALE 2/1
(ALSO SEE DETAIL G)

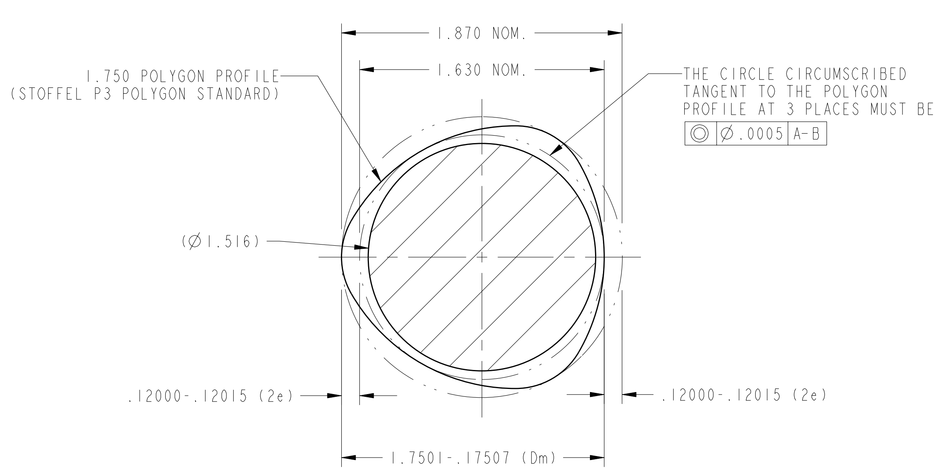


SECTION B-B
SCALE 2/1
POLYGON PROFILE, EXTERNAL

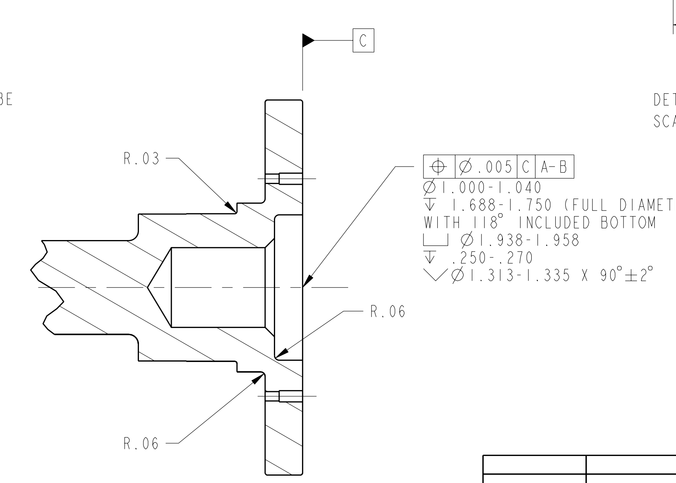


SECTION C-C

| | | | | |
|---|---|---|---|---|
| | | UNLESS OTHERWISE SPECIFIED DIMENSIONS ARE IN INCHES X.X ± .03 X.XXX ± .005 X.XX ± .01 ANGLE ± .5° 63/.03 MACHINED SURFACES INTERPRET DIMENSIONS AND TOLERANCES PER ASME Y14.5M - 1994 | DATE 2010/11/18 | NATIONAL AERONAUTICS AND SPACE ADMINISTRATION JOHN H. GLENN RESEARCH CENTER LEWIS FIELD, CLEVELAND, OHIO |
| | | | MODELER DEZ / R. DETAMORE | |
| | | | PRIMARY CONTACT DER / M. STEVENS | TITLE SHAFT, INPUT, OCG |
| | | | STATE Released | |
| | | THIRD ANGLE PROJECTION | WINDCHILL PRODUCT 060928_Variable_Speed_Transmissio | |
| 060928MRA505 | 2-SPEED TRANS | | MODEL AS14_SHAFT_INPUT | SIZE E CAGE CODE 10FP5 DWG NO 060928MRA514 REV A |
| NEXT ASSY | USED ON | | | SCALE:1/1 SHEET 1 OF 1 |
| APPLICATION | | | | |

DWG NO 060928MRA514 SIZE E REV A

NAME:BERTHAUER OBECT:AS14_SHAFT_INPUT DATE:18-Nov-10 10:32:13