REVISION HISTORY		
ZONE	REV	DESCRIPTION

1. MATERIAL: ALUMINUM 7075-T6, PER ASTM B211
2. 64 Ra ALL OVER UNLESS OTHERWISE SPECIFIED.
3. UNLESS OTHERWISE SPECIFIED ALL FACES AND DIAMETERS MUST BE ⌀ .0020 A B
4. ALL CORNER FILLETS TO BE .015-.020 UNLESS OTHERWISE SPECIFIED.
5. BREAK ALL EDGES .010-.020 UNLESS OTHERWISE SPECIFIED.
6. MINIMUM GRINDING RELIEF ON DIAMETER IS ACCEPTABLE IF NECESSARY TO ACHIEVE SPECIFIED DIMENSIONS.
7. ELECTROCHEMICAL ETCH DRAWING PART NUMBER 060928MRA510 ON SPECIFIED SURFACE, PER SAE-AS478, METHOD 7A, OR, LASER ETCH DRAWING PART NUMBER ON SPECIFIED SURFACE, PER SAE-AS478, METHOD 15B1. (SHALLOW ENGRAVE 0.0001-0.0006 DEEP). (ZONE C7)
8. CLEAR ANODIZE PER MIL-A-8625, TYPE 2, CLASS 1.
9. BEFORE SHIPPING, USE NEW AND CLEAN POLYETHYLENE BAG, OR 4 MIL THICK MINIMUM POLYETHYLENE SHEET SEALED WITH PACKAGING TAPE. MARK WITH DRAWING PART NUMBER 060928MRA510 ON TAG ATTACHED TO BAG.
10. TO BE BALANCED DYNAMICALLY BY NASA. SEE ASSEMBLY DRAWING NUMBER 060928MRA508 FOR DETAILS.

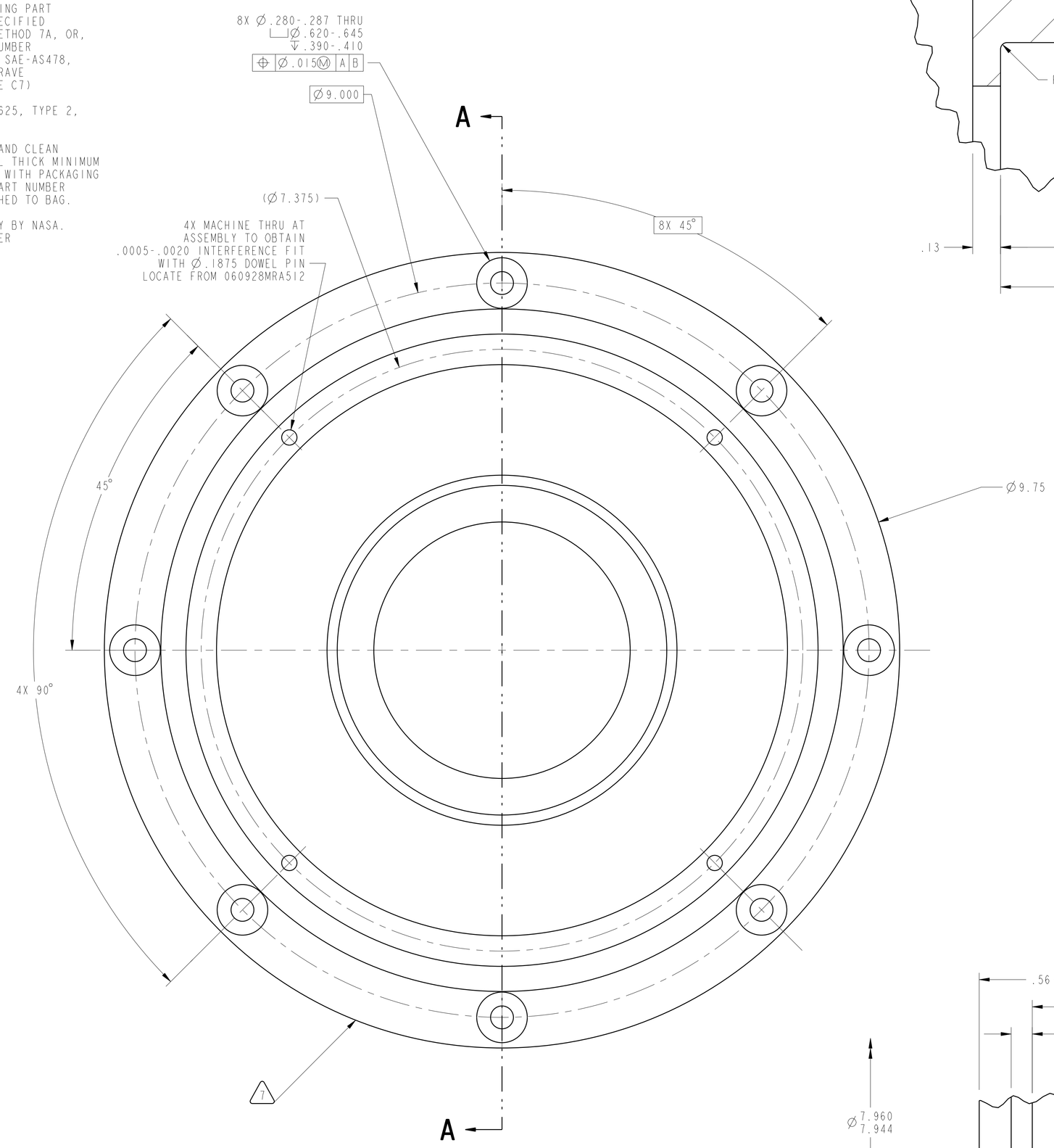

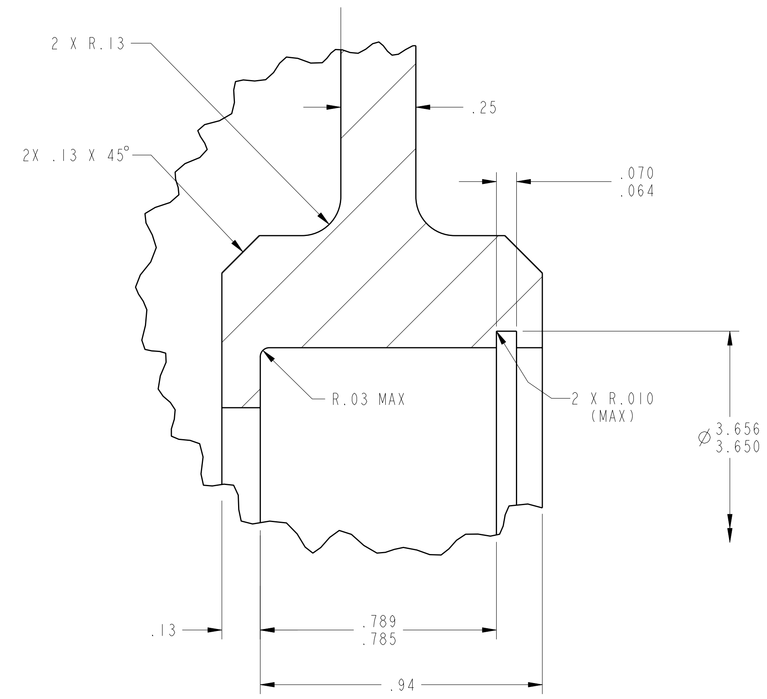

DETAIL F
SCALE 4/1

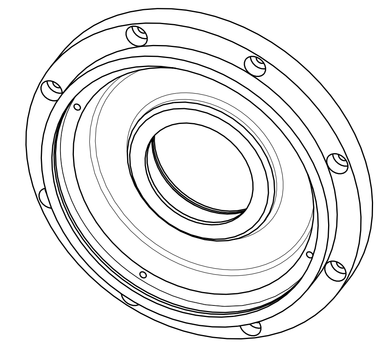

ISO VIEW
SCALE 1/2

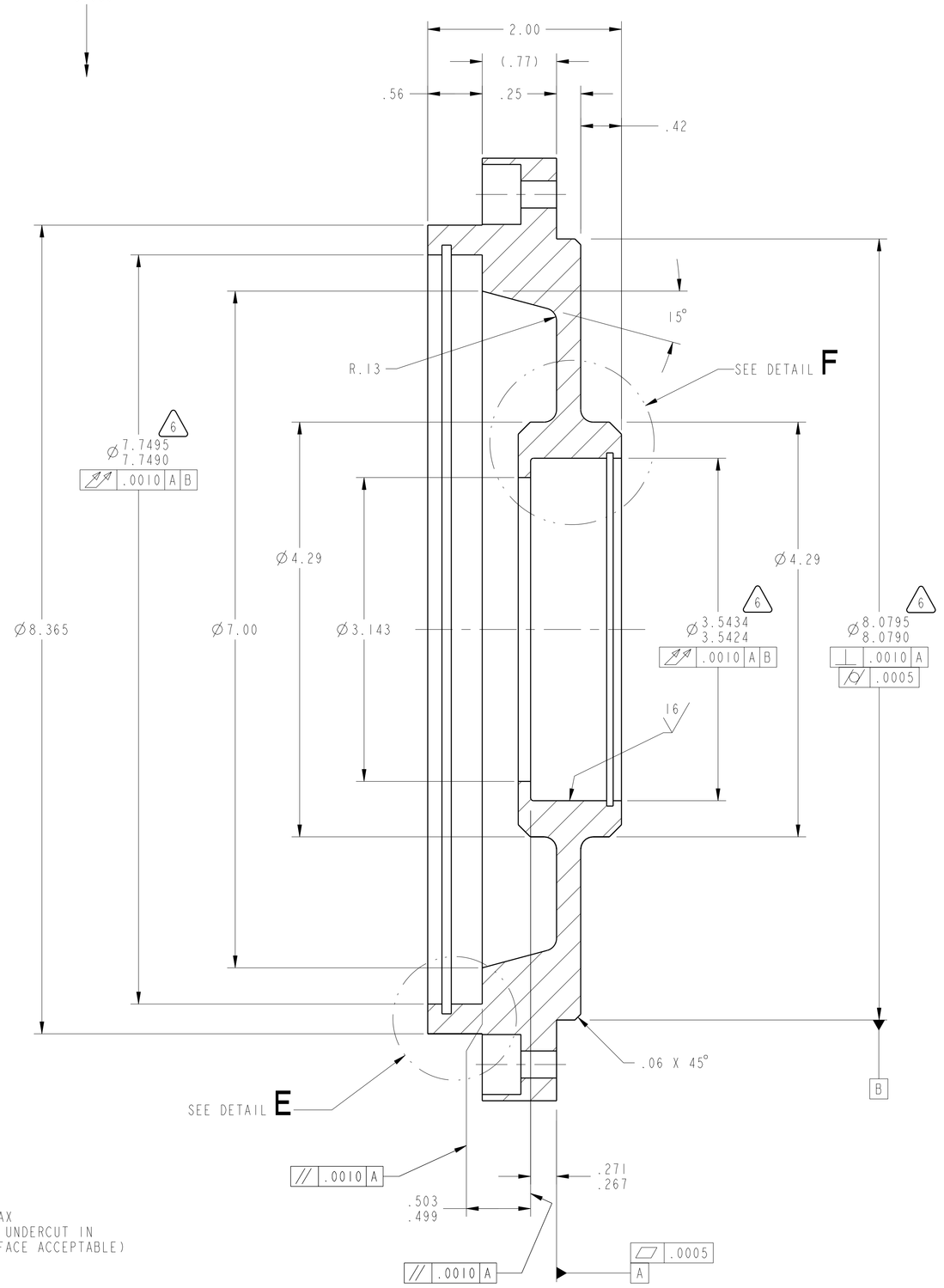

SECTION A-A

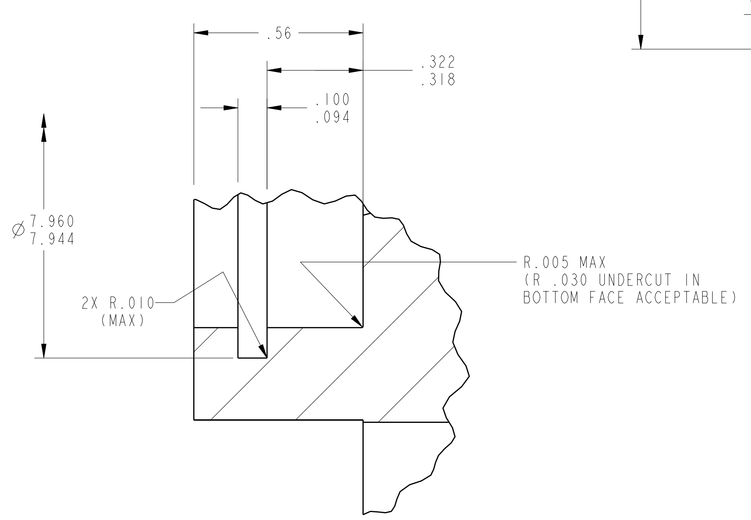

DETAIL E
SCALE 4/1

		UNLESS OTHERWISE SPECIFIED DIMENSIONS ARE IN INCHES X.X ± .03 X.XXX ± .005 X.XX ± .01 ANGLE ± .5° MACHINED SURFACES 63 INTERPRET DIMENSIONS AND TOLERANCES PER ASME Y14.5M - 1994	DATE 2010/11/23	NATIONAL AERONAUTICS AND SPACE ADMINISTRATION JOHN H. GLENN RESEARCH CENTER LEWIS FIELD, CLEVELAND, OHIO
			MODELER DEZ/R. DETAMORE	
			PRIMARY CONTACT DER/M. STEVENS	TITLE FLANGE, ADAPTER, RING-GEAR, OUTPUT
			STATE Released	
		THIRD ANGLE PROJECTION	WINDCHILL PRODUCT	
060928MRA508	2-SPEED TRANS.		060928_Variable_Speed_Transmissio	SIZE E / CAGE CODE IQFP5 / DWG NO 060928MRA510 / REV -
NEXT ASSY	USED ON		MODEL	
APPLICATION			A510_FLANGE_ADAPTER_GEAR_OUTPUT	SCALE: 3/2 / SHEET 1 OF 1

DWG NO 060928MRA510 SH 1 REV -

NAME:DETAMOR OBJECT:A510_FLANGE_ADAPTER_GEAR_OUTPUT DATE:23-Nov-10 14:33:30