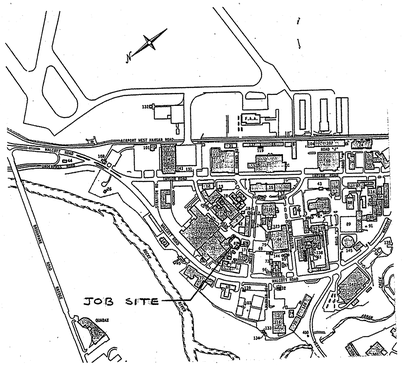

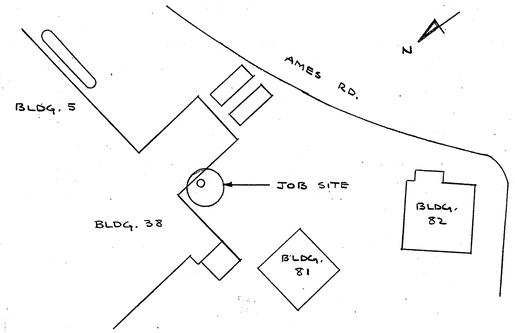

SITE PLAN

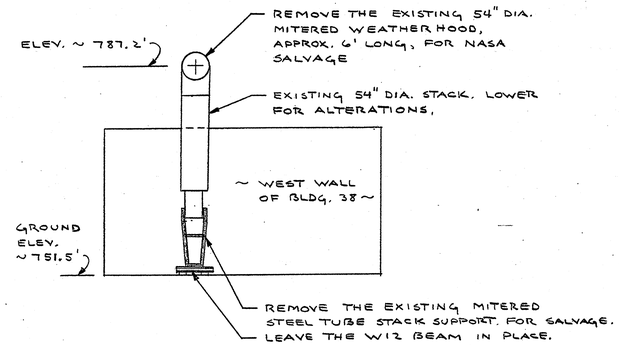

DEMOLITION

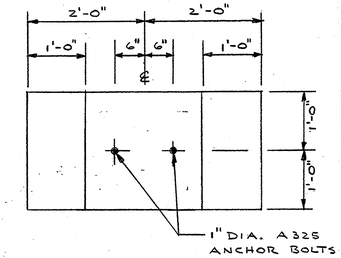

PLAN M

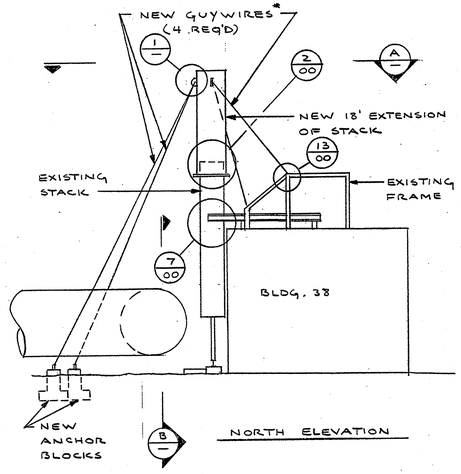

NORTH ELEVATION

* USE 1/2" DIA., 6x19 IWRC, GALVANIZED STEEL WIRE ROPE, McMASTER-CARR No. 3454T21, FOR THE GUYS, AND McMASTER-CARR No. 3489T36 WIRE ROPE CLAMPS FOR TERMINATIONS.

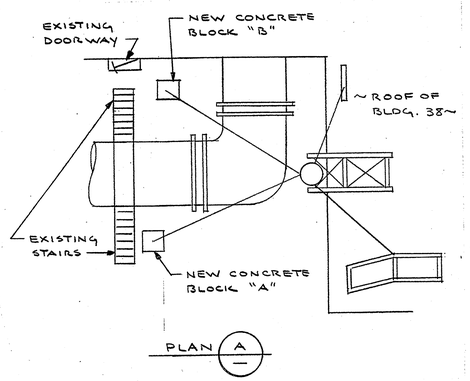

PLAN A

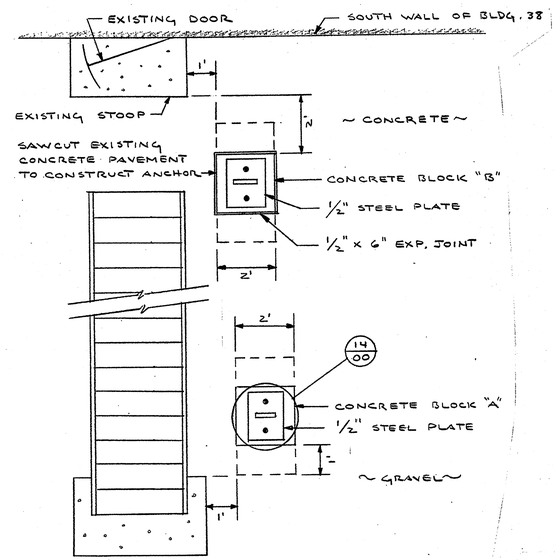

LOCATION PLAN OF NEW ANCHORS

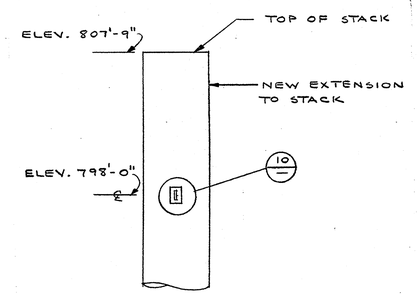

DETAIL 1

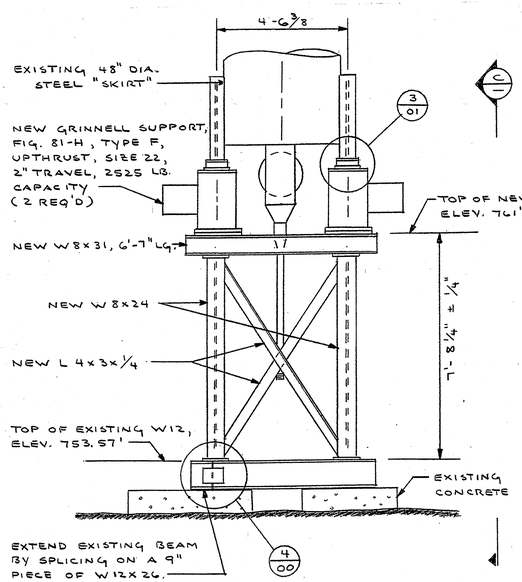

ELEVATION B

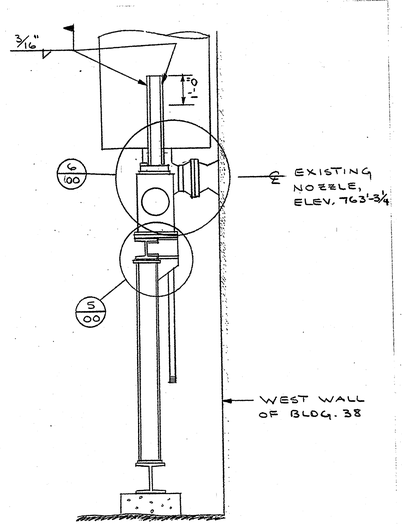

ELEVATION C

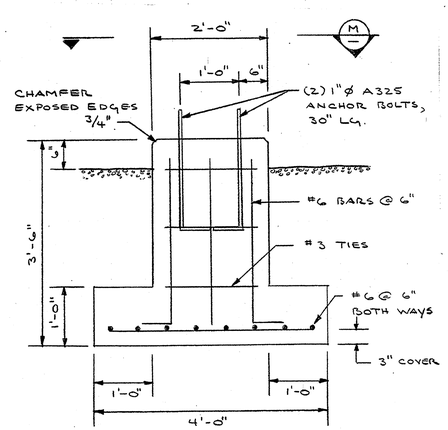

DETAIL OF ANCHORS

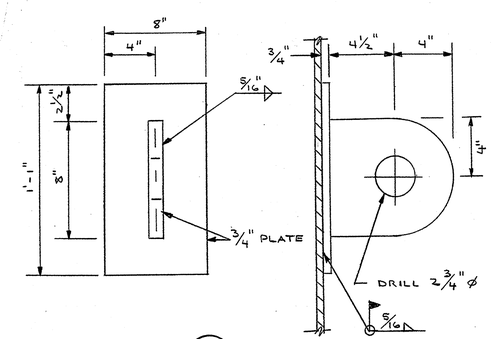

DETAIL 10

SPECIFICATIONS

GENERAL NOTES

1. It shall be the Contractor's responsibility to visit the site and familiarize himself with all existing conditions; check and verify given dimensions; take additional dimensions as necessary and be responsible for their correctness; and report any inaccuracies promptly to the NASA COTR.
2. In the event that any existing facilities are damaged during removal or construction, the Contractor shall notify the NASA COTR and, as directed, make the necessary repairs at his own expense.
3. The Contractor shall be responsible for keeping the site clean at all times. He shall provide metal containers for waste and scrap materials and shall remove these from Government property when full. He shall be responsible for final cleaning.
4. Products listed by name are to denote quality, performance, and salient features. Equal products may be submitted for approval by the NASA COTR.

DEMOLITION

The Government will designate materials and equipment to be salvaged. Salvageable materials and equipment shall be removed in a manner that will cause them the least possible damage. Contractor personnel shall handle, store, and protect removed items that are to be retained by the Government. Identification tags shall be provided on items boxed or placed in containers, indicating the type, size, and quantity of materials.

Structural steel components shall be dismantled at field connections and in a manner that will prevent bending or damage.

Piping shall be disconnected at unions, flanges and valves, and fittings.

EXCAVATION

Excavation shall conform to the dimensions and elevations indicated on NASA Drawing CF 157600 within a tolerance of plus or minus 0.10 foot, and shall extend a sufficient distance from footings to permit placing and removal of concrete formwork. Unsatisfactory soil materials encountered that extend below the required elevations shall be excavated to the depth directed by the NASA COTR.

Backfill, if required per the NASA COTR, shall consist of crushed stone or gravel. Backfill shall be compacted to 95% of its maximum dry density per AASHTO Method 99.

CONCRETE

Concrete shall meet the requirements of ASTM C 94, and shall develop a minimum compressive strength of 4,000 psi in 28 days. The concrete shall have 5 to 7 per cent air entrainment.

Reinforcing bars shall conform to ASTM A 615, Grade 60, and ACI 318, Section 3.5.3.1.

Expansion joint material shall be 1/2 inch thick and shall comply with ODOT 705.11, Preformed Expansion Compression Joint Seal for Concrete, and shall extend the full depth of the existing concrete slab where sawcut.

Concrete shall not be placed when the ambient temperature is below 40 degrees Fahrenheit, nor during rain, sleet, or snow unless protection is provided.

Surfaces against which concrete is to be placed shall be free of debris, loose material, standing water, snow, ice, and other deleterious substances before start of concrete placing.

The concrete shall be consolidated by mechanical vibrating equipment, supplemented by hand rodding. A float finish shall be given to the exposed top surface of the footings, followed by a trowel finish. The edges of the tops of the footings shall be chamfered 3/4 inch.

Curing shall be accomplished by either moist-curing, or by moisture-retaining cover curing.

SYM.	NO.	DESCRIPTION	APP./DATE
		REVISIONS (M)	

DESIGN CONTRACTOR	UNLESS OTHERWISE SPECIFIED .X DIM. MAY VARY ± .XX DIM. MAY VARY ± .XXX DIM. MAY VARY ± ANGULAR DIM. MAY VARY ± .....DIM. MAY VARY ± BREAK SHARP EDGES.....		
	DR.	CK.	D. SUP.
	DES.	D. ENG. MSH/MJM	D.P. ENG.
APPROVED	D.S. HD.	D.B. CH.	D. DIV.
C. O. R.	R. ENG.	R.S. HD.	R. DIV.

NASA LEWIS RESEARCH CENTER CLEVELAND, OHIO 44135

MODIFICATIONS OF SUPPORTS, INLET, AND DISCHARGE FOR ASCR SILENCER

BUILDING 38
SITE PLANS, DEMOLITION, ELEVATIONS

SCALE
REFERENCE

CF 157599
STRUCTURAL
OFFICIAL DATE 2/23/93