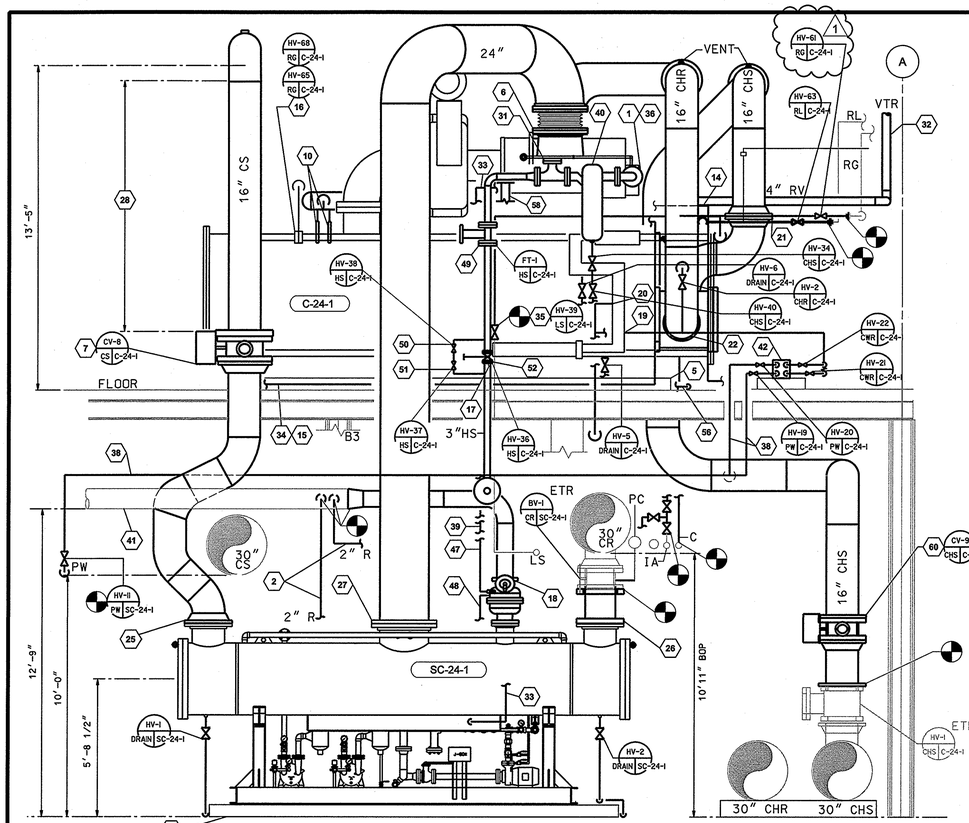

B CHILLERS CH 24-1 - SOUTH ELEV.

M-24-232 M-24-240 M-24-233 3/8"=1'-0"

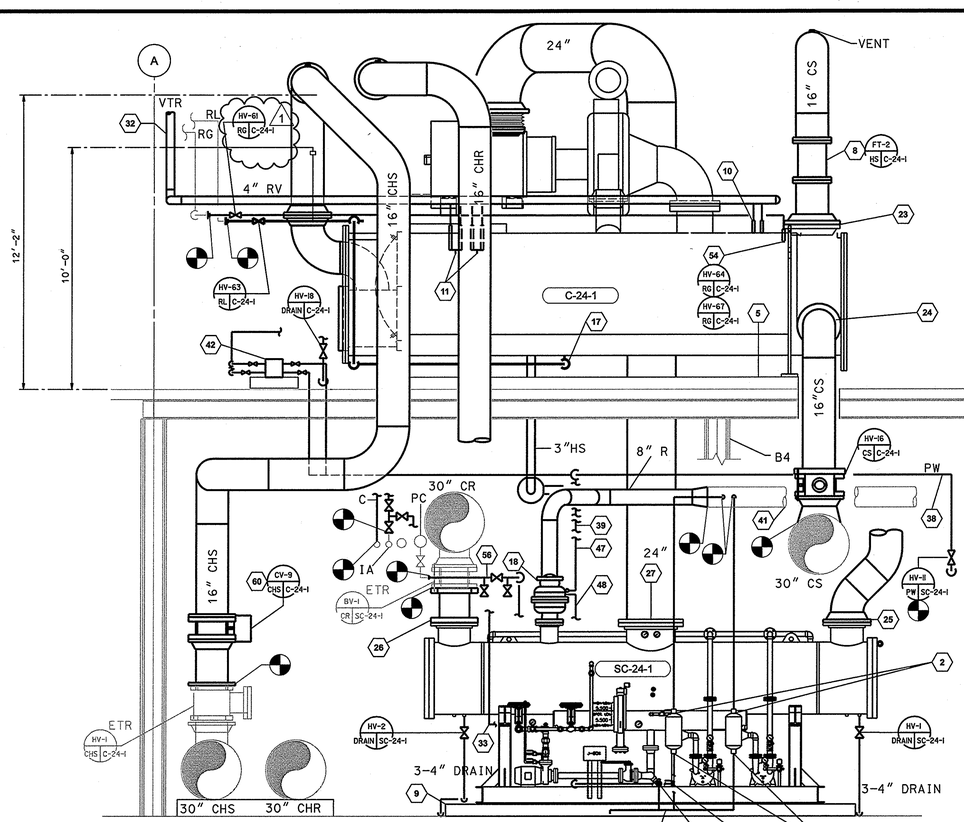

A CHILLERS CH 24-1 - NORTH ELEV.

M-24-232 M-24-240 M-24-233 SCALE: 3/8"=1'-0"

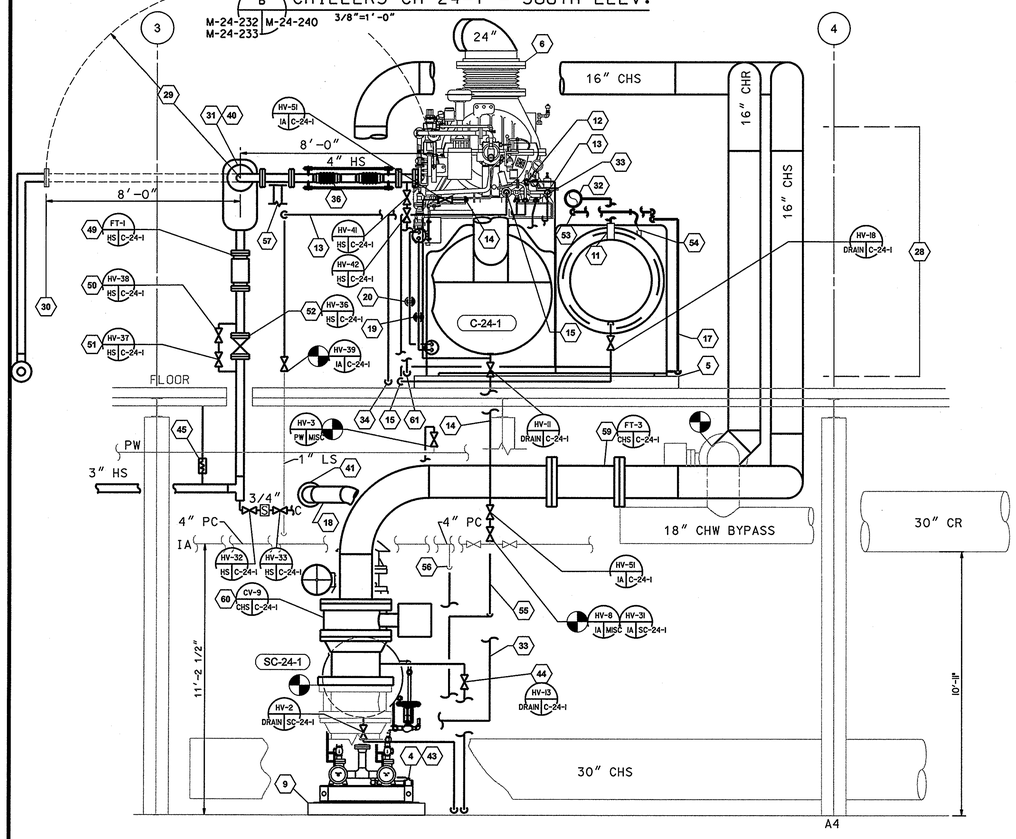

D CHILLERS CH 24-1 - EAST ELEV.

M-24-232 M-24-240 M-24-233 SCALE: 3/8"=1'-0"

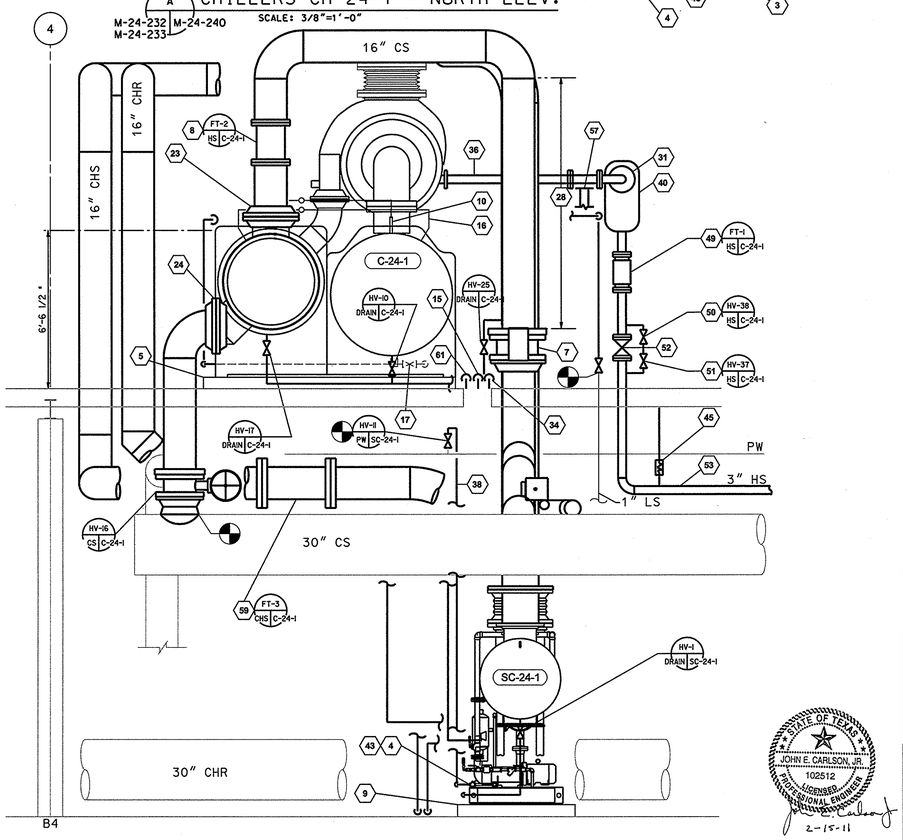

C CHILLERS CH 24-1 - WEST ELEV.

M-24-232 M-24-240 M-24-233 SCALE: 3/8"=1'-0"

CAD FILE NAME: M-24-240.dgn

GENERAL NOTES:

1. CONTRACTOR SHALL REPAIR AND PAINT ALL DISTURBED, DAMAGED, AND EXPOSED FLOOR SURFACES, EQUIPMENT SUPPORT STRUCTURES, AND GROUTED SURFACES ADJOINING FLOOR WITH NASA STANDARD FLOOR PAINT. SURFACES SHALL BE CLEANED, REPAIRED, SCRAPED, AND SANDED SMOOTH PRIOR TO APPLICATION OF PAINT. SEE PAINT NOTES AND SPECIFICATIONS SHEET M-24-2.

KEYED NOTES:

1. FOUR INCH 300 LB FLANGED HIGH PRESSURE STEAM INLET TO TURBINE.
2. PROVIDE TWO INCH INTERCONNECTING PIPING FROM TWO INCH NPT SURFACE CONDENSER SEPARATOR VENT CONNECTION TO EXISTING VENT THROUGH ROOF.
3. TWO INCH NPT SURFACE CONDENSER SEPARATOR DRAIN CONNECTIONS. ROUTE TO FLOOR DRAIN.
4. 1-1/2 INCH NPT SURFACE CONDENSER DRAIN CONNECTION. ROUTE TO FLOOR DRAIN.
5. CHILLER HOUSEKEEPING PAD. SEE STRUCTURAL DRAWINGS AND SPECIFICATIONS FOR ADDITIONAL DETAILS.
6. 24 INCH 125 LB ANSI FLANGED TURBINE EXHAUST CONNECTION.
7. CONDENSER WATER FLOW CONTROL VALVE CV-8. SEE TEMPERATURE CONTROL VALVE SCHEDULE AND WRITTEN SPECIFICATIONS FOR DETAILS.
8. CONDENSER WATER FLOW TRANSMITTER. SEE WRITTEN SPECIFICATIONS FOR DETAILS.
9. SURFACE CONDENSER HOUSEKEEPING PAD. SEE STRUCTURAL DRAWINGS AND SPECIFICATIONS FOR ADDITIONAL DETAILS.
10. QUANTITY TWO, 1-1/4 INCH NPT EVAPORATOR REFRIGERANT RELIEF VALVES. ROUTE TO REFRIGERANT STORAGE SYSTEM REFRIGERANT GAS LINE.
11. QUANTITY FOUR, ONE INCH NPT CONDENSER REFRIGERANT RELIEF VALVES.
12. ONE INCH NPT TURBINE SEAL STEAM LINE RELIEF VALVE CONNNECTION. ROUTE TO TWELVE INCHES A.F.F.
13. 3/4 INCH NPT TURBINE GLAND STEAM SEAL CONNECTION. ROUTE TO LOW PRESSURE STEAM.
14. ONE INCH NPT TURBINE GOVERNOR AIR SUPPLY AND BEARING SEAL AIR PURGE CONNECTION.
15. PROVIDE 1-1/2 INCH PIPING FROM GLAND LEAK-OFF CONTROL VALVE PCV-175 CONNECTION TO FLOOR DRAIN.
16. REMOVE QUANTITY TWO, 3/4 INCH MALE FLARE SERVICE CONNECTIONS FOR EVAPORATOR. INSTALL NEW REFRIGERATION DUTY BALL VALVES HV-65 AND HV-68. ROUTE TO EXISTING REFRIGERANT STORAGE SYSTEM REFRIGERANT GAS LINE.
17. REMOVE 3/4 INCH MALE FLARE CONNECTION ON BOTTOM OF EVAPORATOR. INSTALL NEW REFRIGERATION DUTY BALL VALVES HV-66 AND HV-69. ROUTE TO EXISTING REFRIGERANT STORAGE SYSTEM REFRIGERANT LIQUID LINE.
18. EIGHT INCH 150 LB FLANGED SURFACE CONDENSER RELIEF CONNECTION. CONNECT TO EXISTING VENT THROUGH ROOF.
19. TWO INCH NPT OIL COOLER CHILLED WATER INLET. ROUTE TWO INCH PIPING TO 16 INCH CHILLED WATER RETURN LINE.
20. TWO INCH NPT OIL COOLER CHILLED WATER OUTLET. ROUTE TO 16 INCH CHILLED WATER RETURN LINE AT CHILLED WATER PUMP CHWP-24-1 INLET.
21. SIXTEEN INCH 150LB FLANGED EVAPORATOR WATER OUTLET.
22. SIXTEEN INCH 150 LB FLANGED EVAPORATOR WATER INLET.
23. SIXTEEN INCH 150 LB FLANGED CONDENSER WATER OUTLET.
24. SIXTEEN INCH 150 LB FLANGED CONDENSER WATER INLET.
25. SIXTEEN INCH 150 LB FLANGED SURFACE CONDENSER WATER SIDE INLET.
26. SIXTEEN INCH 150 LB FLANGED SURFACE CONDENSER WATER SIDE OUTLET.
27. 24 INCH 150 LB FLANGED SURFACE CONDENSER STEAM SIDE INLET.
28. SPACE RESERVED FOR FLOW MEASUREMENT FOR FACTORY PERFORMANCE TESTING. HOLD 12 INCH CLEARANCE FULL PERIMETER FOR FACTORY TESTING.
29. HOLD RADIUS FOR HS LINE PERFORMANCE TEST.
30. TIE-IN FOR PERFORMANCE TESTING. CONTRACTOR SHALL PROVIDE TEMPORARY FOUR INCH HS PIPING FROM THIS LOCATION, EAST THROUGH WINDOW, TO EXTERIOR GROUND LEVEL FOR STEAM LINE PERFORMANCE TESTING AND CLEANING. REMOVE FOLLOWING PERFORMANCE TEST AND REPLACE OR REPAIR WINDOW.
31. IFC SERIES MODEL T600FSS4BW, STYLE 3, 304 STAINLESS STEEL FOUR INCH STRAINER.
32. PROVIDE FOUR INCH PIPING FROM RELIEF VALVES UP THROUGH ROOF. SEE ROOF PENETRATION DETAIL. ROUTE SHALL BE SIMILAR TO VENT PIPING ON CHILLERS C-24-2 AND C-24-3.
33. PROVIDE ONE INCH EQUALIZING LINE CONNECTING TURBINE CASING DRAIN TO SURFACE CONDENSER SC-24-1 HOT WELL. (PROVIDED BY CONTRACTOR.)
34. ROUTE 1-1/2 INCH HOT DRAIN PIPING TO FLOOR DRAIN.
35. ONE INCH LOW PRESSURE STEAM CONNECTION. ROUTE TO TURBINE GLAND SEALING STEAM CONNECTION.
36. AMERICAN BOA, INC. FOUR INCH UFSPBE-0420-41 1/8-LT-M5 TIED UNIVERSAL PRESSURE BALANCED ELBOW EXPANSION JOINT, 321 STAINLESS STEEL, 5 PLY BELLOWS, CARBON STEEL PIPING, CLASS 600 POUND RAISED FACE A105 FLANGES, 41 1/8 INCH ELBOW CENTERLINE.
37. NOT USED.
38. ONE INCH NPT POTABLE WATER PIPING FOR VACUUM PUMP SEAL AND RELIEF VALVE SEALING WATER.
39. 3/4 INCH VACUUM PUMP SEALING WATER PIPING FROM POTABLE WATER HEAT EXCHANGER. ROUTE TO SURFACE CONDENSER SC-24-1 VACUUM PUMP SEALING WATER CONNECTION.
40. MOISTURE SEPARATOR MS-24-1. SEE SCHEDULE M-24-3.
41. EXISTING 10 INCH VENT THROUGH ROOF TO REMAIN.
42. POTABLE WATER HEAT EXCHANGER PROVIDED BY CHILLER MANUFACTURER. MOUNT ON SIX INCH HOUSEKEEPING PAD. SEE STRUCTURAL DRAWINGS FOR DETAILS.
43. SURFACE CONDENSER SC-24-1 VACUUM PUMP SEALING WATER CONNECTION.
44. CHILLED WATER SUPPLY PIPING DRAIN DOWN VALVE.
45. ANVIL FIG. 99, C-98, HANGAR SIZE 6, TYPE B DOUBLE SPRING HANGER AND CLEVIS HANGAR.
46. NOT USED
47. 3/8 INCH NPT SURFACE CONDENSER RELIEF VALVE SEALING WATER CONNECTION. ROUTE 1/2 INCH PIPING TO POTABLE WATER PIPING.
48. 3/4 INCH NPT SURFACE CONDENSER RELIEF VALVE OVERFLOW CONNNECTION. ROUTE 3/4 INCH PIPING TO FLOOR DRAIN.
49. HIGH PRESSURE STEAM FLOW TRANSMITTER. SEE WRITTEN SPECIFICATIONS FOR DETAILS.
50. SLOW ROLL VALVE
51. BLOCK VALVE ASSIST
52. MAIN BLOCK VALVE FOR HIGH PRESSURE STEAM.
53. REFRIGERANT STORAGE SYSTEM REFRIGERANT GAS PIPING. CONNECT TO EXISTING REFRIGERANT STORAGE SYSTEM REFRIGERANT GAS PIPING.
54. REMOVE QUANTITY TWO, 3/4 INCH MALE FLARE SERVICE CONNECTIONS FOR CONDENSER. INSTALL NEW REFRIGERATION DUTY BALL VALVES HV-64 AND HV-67. ROUTE TO EXISTING REFRIGERANT STORAGE SYSTEM REFRIGERANT GAS LINE.
55. PROVIDE ONE INCH INSTRUMENT PIPING FROM EXISTING INSTRUMENT AIR MAIN TO SURFACE CONDENSER SC-24-1 INSTRUMENT AIR CONNECTION.
56. PROVIDE 1-1/2 INCH PUMPED CONDENSATE PIPING FROM SURFACE CONDENSER LCV-180A CONNECTION TO EXISTING PUMPED CONDENSATE PIPING MAIN VALVES HV-41, HV-42, AND HV-43.
57. PROVIDE ANVIL FIG. 439, TYPE TWO PTFE PIPE SLIDE ASSEMBLY MOUNTED TO SUPPORT STANCHION. SEE STRUCTURAL DRAWINGS FOR ADDITIONAL DETAILS.
58. PROVIDE FOUR INCH METRAFLEX MODEL PA ANCHOR CLAMP ASSEMBLY RIGIDLY MOUNTED TO SUPPORT STANCHION.
59. CHILLED WATER FLOW TRANSMITTER. SEE WRITTEN SPECIFICATIONS FOR DETAILS.
60. CHILLED WATER FLOW CONTROL VALVE CV-9. SEE TEMPERATURE CONTROL VALVE SCHEDULE AND WRITTEN SPECIFICATIONS FOR DETAILS.
61. ROUTE DEDICATED 2 INCH HS LINE PURGE PIPING FROM HV-42 TO FLOOR DRAIN. TERMINATE 6 INCHES A.F.F

ISSUED FOR CONSTRUCTION

Burns & McDonnell — SINCE 1898 — Engineering License No. F-845

STATE OF TEXAS — JOHN E. CARLSON, JR. — 102512 — LICENSED PROFESSIONAL ENGINEER — 2-15-11

REVISION	DATE	DESCRIPTION
1	02-15-11	REVISED AS NOTED
0	09-24-10	ISSUED FOR CONSTRUCTION

SIGNATURES		DATE
DR. DC	ENG RG	1-28-10
CH JA	APPR JC	09-24-10

REV
DISCP
PE
APPR

NATIONAL AERONAUTICS & SPACE ADMINISTRATION
LYNDON B. JOHNSON SPACE CENTER HOUSTON, TEXAS

BUILDING 24
CENTRAL HEATING AND COOLING PLANT

MECHANICAL SECTIONS
CHILLER C-24-1

PROJECT NO. | SHEET NO. | OF
PROJECT ID | DWG NO. M-24-240
CODE IDENT. NO. 21398 | SIZE E

COPYRIGHT © 2010 BURNS & McDONNELL ENGINEERING COMPANY, INC.

H:\PROJECTS & PROPOSALS\NASA\53985-54001 CENTRAL PLANT REPAIR & UPGRADE\CAD\MECH\M-24-240.DGN 2-24-2010 14:53 RZAMBRANA