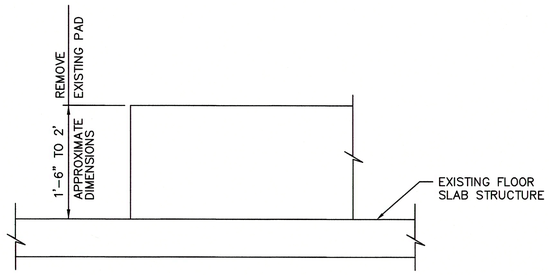

① CONTRACTOR TO REMOVE EXISTING EQUIPMENT PAD.

② CONTRACTOR SHALL NOT DAMAGE EXISTING STRUCTURE.

③ CONTRACTOR SHALL REPAIR ANY DAMAGE TO OWNER'S SATISFACTION.

④ CONTRACTOR TO FINISH EXPOSED FLOOR SLAB TO MATCH EXISTING FLOOR FINISH.

1 / 6 73 REMOVE EXISTING CHILLER PAD
N.T.S
1

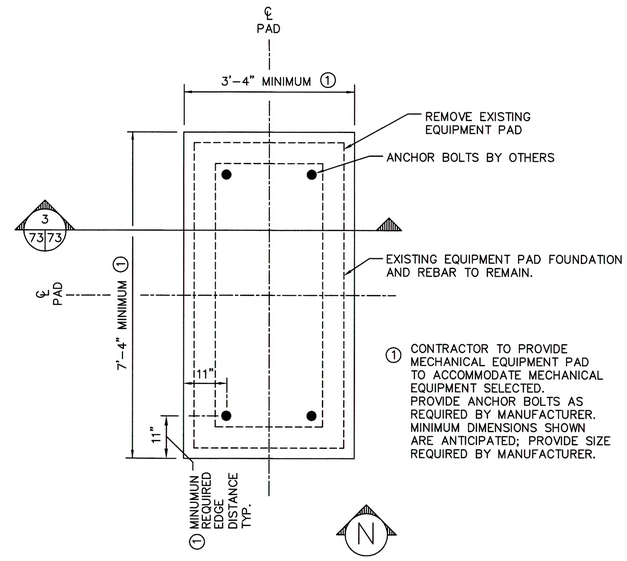

① CONTRACTOR TO PROVIDE MECHANICAL EQUIPMENT PAD TO ACCOMMODATE MECHANICAL EQUIPMENT SELECTED. PROVIDE ANCHOR BOLTS AS REQUIRED BY MANUFACTURER. MINIMUM DIMENSIONS SHOWN ARE ANTICIPATED; PROVIDE SIZE REQUIRED BY MANUFACTURER.

PLAN

2 / 6 73 CHILLED WATER PUMP EQUIPMENT PADS
N.T.S
1

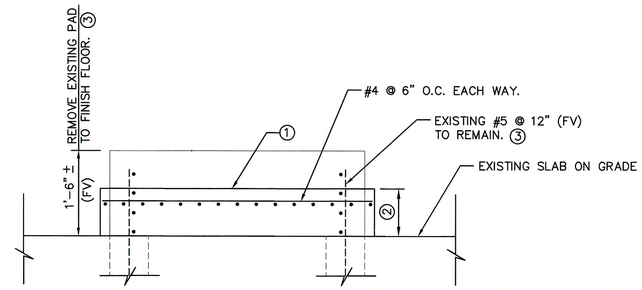

① SEE SPECIFICATIONS FOR FLATNESS AND LEVELNESS REQUIREMENTS.

② CONTRACTOR COORDINATE REQUIRED EQUIPMENT PAD SIZE WITH MECHANICAL EQUIPMENT SELECTED.

③ DO NOT DAMAGE EXISTING REINFORCING; CLEAN AND STRAIGHTEN.

3 / 6 73 CHILLED WATER PUMP EQUIPMENT PAD
N.T.S
1

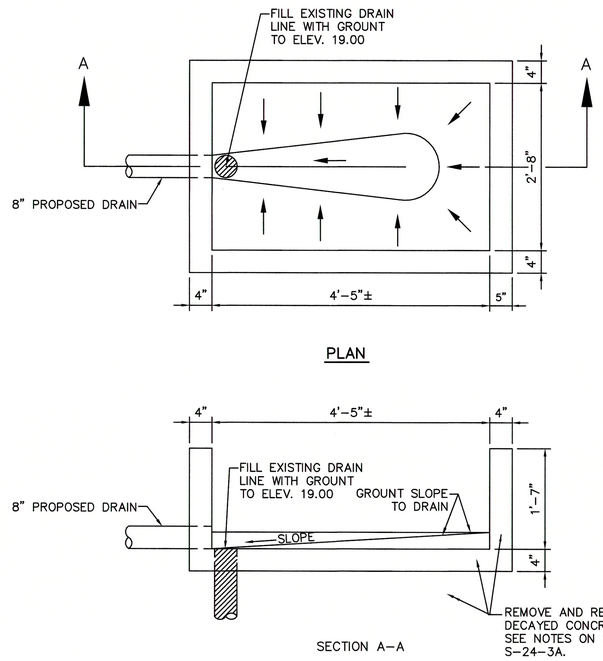

PLAN

SECTION A-A

PITS 2,3,&4

4 / 3A 73 GROUT BOILER PITS
N.T.S
OPTION #1

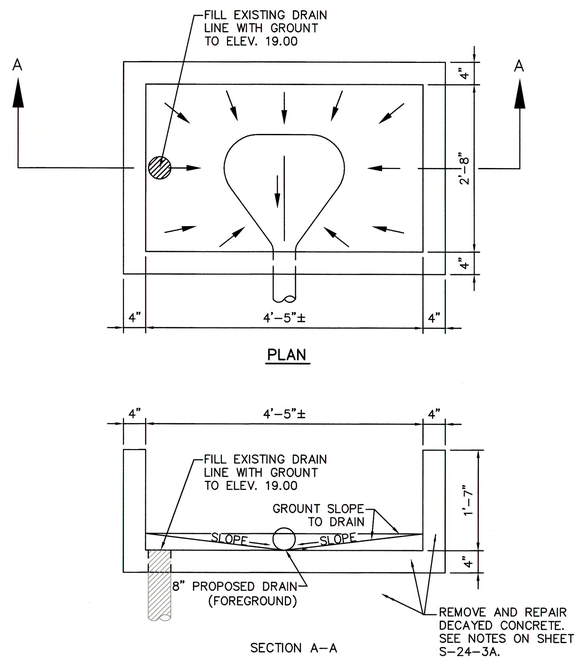

PLAN

SECTION A-A

PIT 5

5 / 3A 73 GROUT BOILER PITS
N.T.S
OPTION #1

REVISION	DATE	DESCRIPTION
1	2/10/11	MISCELLANEOUS CHANGES
0	9/24/10	ISSUED FOR CONSTRUCTION

SIGNATURES		DATE
DR.	ENG	
CH	APPR	

NATIONAL AERONAUTICS & SPACE ADMINISTRATION
LYNDON B. JOHNSON SPACE CENTER HOUSTON, TEXAS

BUILDING 24

STRUCTURAL DETAILS

REV
DISCP
PE
APPR

PROJECT NO.
PROJECT ID WR
CODE IDENT NO. 21356
SIZE F
SHEET NO. ___ OF ___
DWG NO. S-24-73

OTHON CONSULTING ENGINEERS
F-1471 HOUSTON • AUSTIN • DALLAS

$DATE$ $TIME$ $USER$ $FILE$ $FILE$