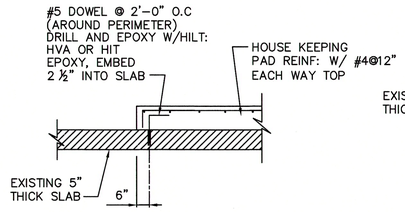

1 / 6A 71 N.T.S
BASE BID & OPTION #1

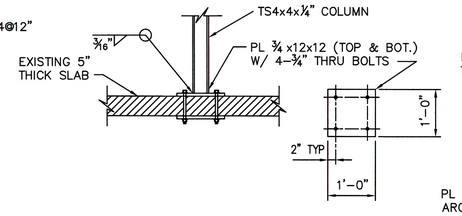

2 / 69 71 N.T.S

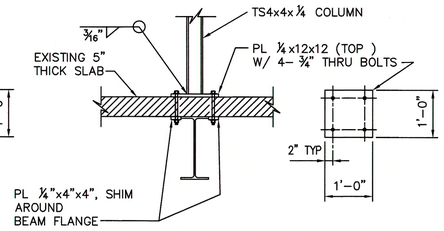

* DETAIL APPLIES IF FLOOR BEAM EXISTS BENEATH COLUMN. DO NOT BOLT THROUGH BEAM.

3 / 69 71 N.T.S

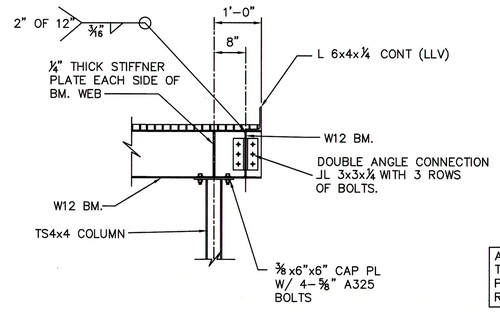

4 / 69 71 N.T.S

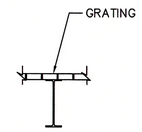

ATTACH FLOOR GRATE TO SUPPORT MEMBERS PER MANUFACTURER'S REQUIREMENTS.

5 / 69 71 N.T.S

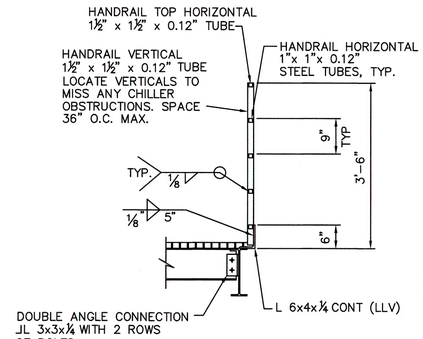

6 / 69 71 N.T.S

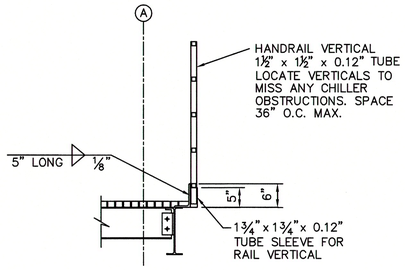

7 / 69 71 N.T.S

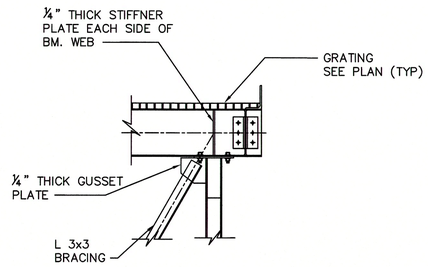

8 / 69 71 N.T.S

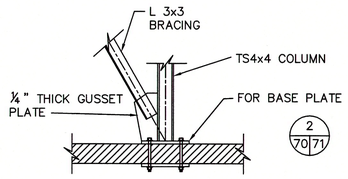

9 / 69 71 N.T.S

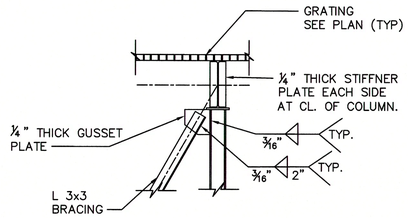

10 / 69 71 N.T.S

STATE OF TEXAS
TODD M. SPECK
86389
LICENSED
PROFESSIONAL ENGINEER
2-10-11

REVISION	DATE	DESCRIPTION
1	2/10/11	MISCELLANEOUS CHANGES
0	9/24/10	ISSUED FOR CONSTRUCTION

SIGNATURES		DATE
DR.	ENG	
CH	APPR	
REV		
DISCP		
PE		
APPR		

NATIONAL AERONAUTICS & SPACE ADMINISTRATION
LYNDON B. JOHNSON SPACE CENTER HOUSTON, TEXAS
BUILDING 24

STRUCTURAL DETAILS

PROJECT NO.
PROJECT ID MB
CODE IDENT NO. 21356
SIZE F
SHEET NO. ___OF___
DWG NO. S-24-71

OTHON CONSULTING ENGINEERS
F-1471 HOUSTON • AUSTIN • DALLAS

$DATES $TIMES $USERS $FILES $FILES