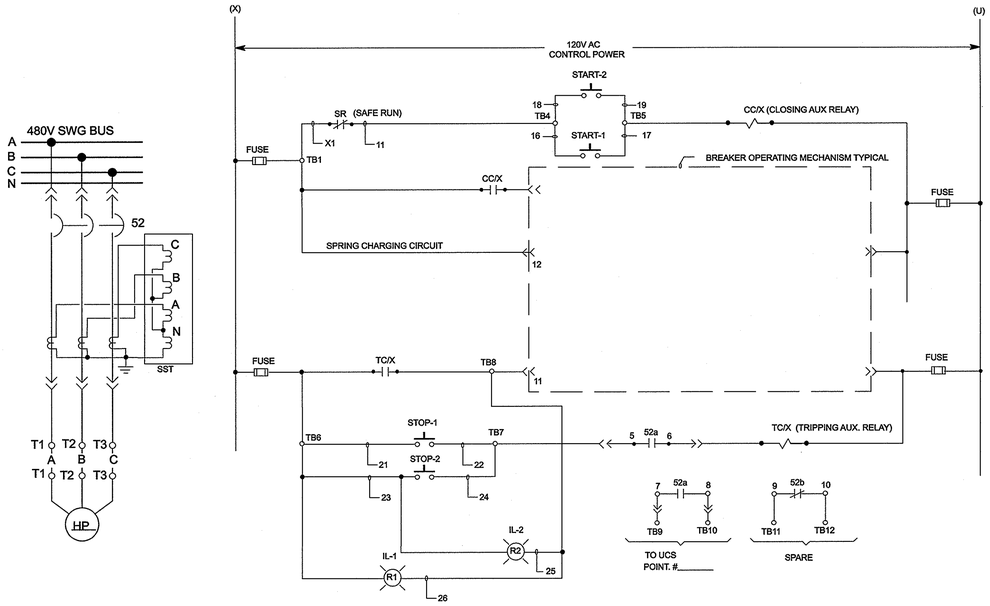

SWG NO.	CUB NO.	DESCRIPTION	HP	START/STOP-1 & IL-1 LOCATION	START-1/STOP-1 WIRING TO SWGR					START-2/STOP-2 & IL-2 LOCATION	START-2/STOP-2 WIRING TO SWGR					SAFE RUN (SR) WIRING TO SWGR		UCS
					TB4	TB5	TB6	TB7	TB8		TB4	TB5	TB6	TB7	TB8	TB1	TB4	POINT NO.
4	12	CONDENSER WATER PUMP CWCP-24-4	250	CHILLER PNL	16	17	21	22	26	COOLING TOWER PANEL	18	19	23	24	25	X1	11	
4	8	CONDENSER WATER PUMP CWCP-24-5	200	CHILLER PNL	16	17	21	22	26	COOLING TOWER PANEL	18	19	23	24	25	X1	11	
4	11	CONDENSER WATER PUMP CWCP-24-6	250	CHILLER PNL	16	17	21	22	26	COOLING TOWER PANEL	18	19	23	24	25	X1	11	

1 SCHEMATICS-CONDENSER WATER PUMPS CWCP-24-4,5,6

50A 50A N.T.S.

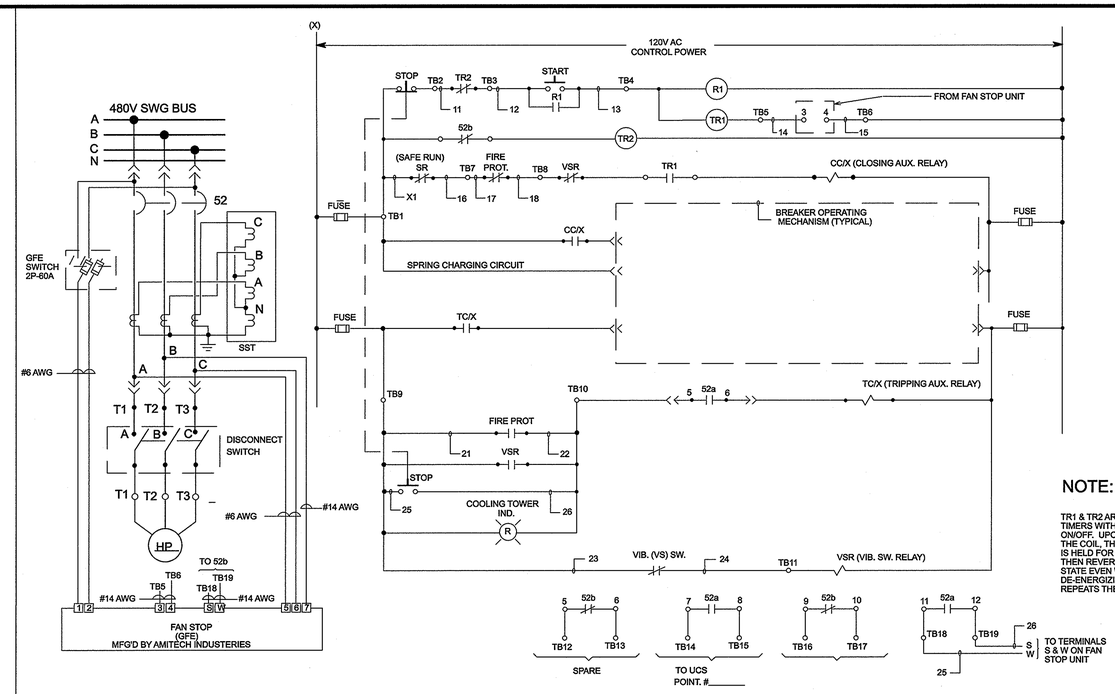

NOTE:

TR1 & TR2 ARE INTERVAL TIMERS WITH INSTANT ON/OFF. UPON ENERGIZING THE COIL, THE ENERGIZED STATE IS HELD FOR A PRESET TIME THEN REVERTS TO THE PREVIOUS STATE EVEN WITH POWER ON. DE-ENERGIZING & RE-ENERGIZING REPEATS THE CYCLE.

SWG/CUB	DESCRIPTION	HP	START/STOP SW LOCATION	START/STOP & IND. LIGHT WIRING TO SWGR						SAFE RUN (SR) WIRING TO SWGR		VIB. SW. (VS) WIRING TO SWGR		FAN STOP WIRING TO SWGR		FIRE PROTECTION CIRCUIT WIRING TO MCC				FAN STOP STATUS WIRING TO SWGR		UCS WIRING TO SWGR	
				TB1	TB2	TB3	TB4	TB9	TB10	TB1	TB3	TB9	TB11	TB5	TB6	TB7	TB8	TB9	TB10	TB18	TB19	TB14	TB15
4/13	COOLING TOWER FAN CT-24-4	100	COOLING TOWER PANEL	X1	11	12	13	25	26	X1	16	23	24	14	15	17	18	21	22	25	26		
4/6	COOLING TOWER FAN CT-24-5	100	COOLING TOWER PANEL	X1	11	12	13	25	26	X1	16	23	24	14	15	17	18	21	22	25	26		
4/7	COOLING TOWER FAN CT-24-6	100	COOLING TOWER PANEL	X1	11	12	13	25	26	X1	16	23	24	14	15	17	18	21	22	25	26		

2 SCHEMATICS-COOLING TOWER FANS CT-24-4,5,6

50A 50A N.T.S.

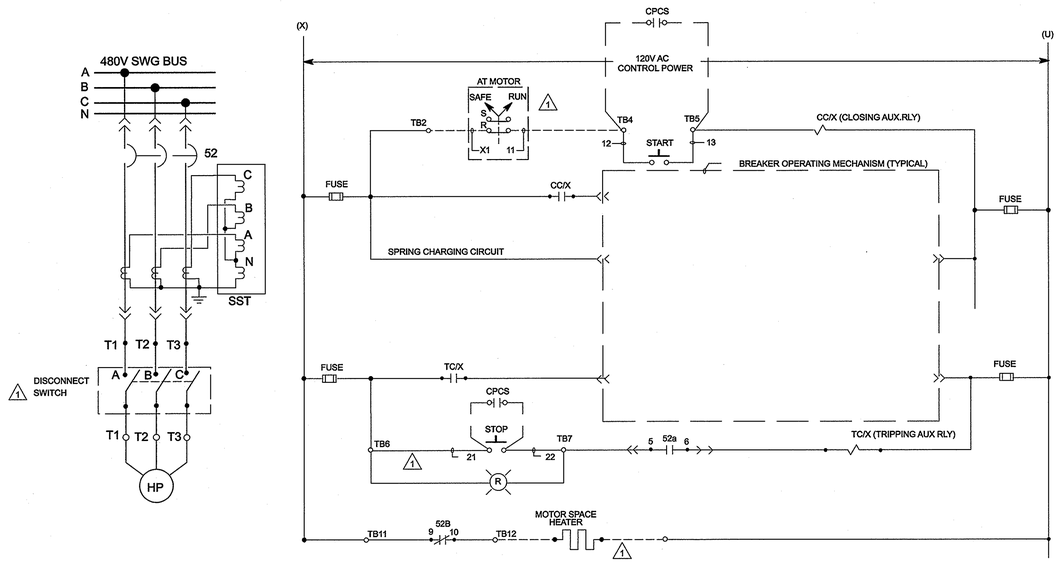

SWG NO.	CUB NO.	DESCRIPTION	HP	START/STOP LOC.	START/STOP & IND. LIGHT WIRING TO SWGR				SAFE RUN (SR) WIRING TO SWGR		POINT NO.
					TB4	TB5	TB6	TB7	TB1	TB4	
4	10	CHILLED WATER PUMP CHWP-24-4	250	CHILLER PNL	12	13	21	22	X1	11	
4	4	CHILLED WATER PUMP CHWP-24-5	250	CHILLER PNL	12	13	21	22	X1	11	
4	5	CHILLED WATER PUMP CHWP-24-6	250	CHILLER PNL	12	13	21	22	X1	11	
2	7	CHILLED WATER PUMP CHWP-24-7	250	CHILLER PNL	12	13	21	22	X1	11	

3 SCHEMATICS-CHILLED WATER PUMPS CHWP-24-4,5,6,7

50A 50A N.T.S.

ENTIRE SHEET IS OPTION #2

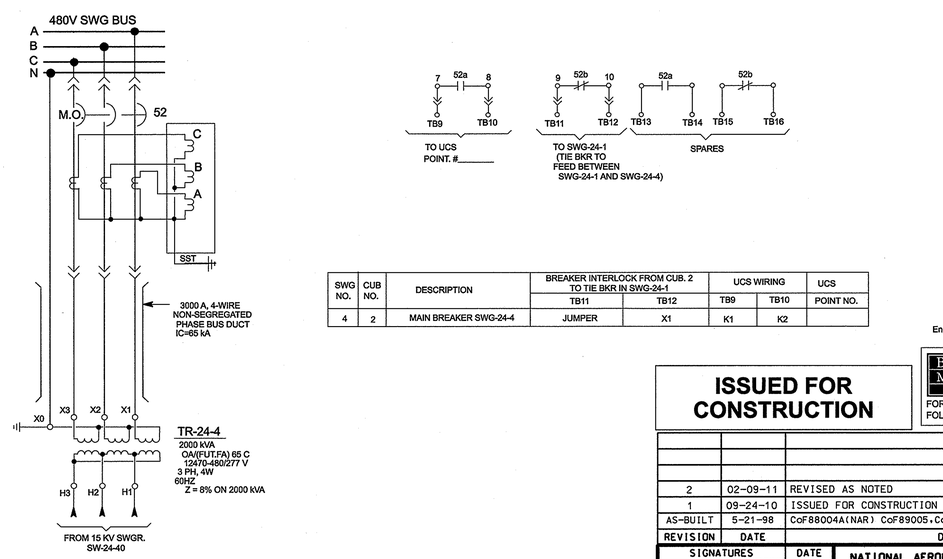

SWG NO.	CUB NO.	DESCRIPTION	BREAKER INTERLOCK FROM CUB. 2 TO TIE BKR IN SWG-24-1		UCS WIRING		UCS
			TB11	TB12	TB9	TB10	POINT NO.
4	2	MAIN BREAKER SWG-24-4	JUMPER	X1	K1	K2	

4 SCHEMATICS-MAIN BREAKER SWG-24-4

50A 50A N.T.S.

CAD FILE NAME: E24Z50A.DGN

STATE OF TEXAS
JOHN E. CARLSON, JR.
102512
LICENSED PROFESSIONAL ENGINEER
2/9/11

Engineering License No. F-845

ISSUED FOR CONSTRUCTION

Burns & McDonnell SINCE 1898

THE REGISTRANT OF THE NEWLY APPLIED SEAL, DATED 02/09/11, ONLY ASSUMES RESPONSIBILITY FOR THE CHANGES AS INDICATED BY THE FOLLOWING REVISION(S) 2.

REVISION	DATE	DESCRIPTION
2	02-09-11	REVISED AS NOTED
1	09-24-10	ISSUED FOR CONSTRUCTION
AS-BUILT	5-21-98	CoF88004A(NAR) CoF89005.CoF91055(TWS)

SIGNATURES		DATE
DR. NAR	ENG REDRAWN	3-18-94
CH GJB	APPR GJB	3-30-95
DIANE NICOLAS		3-30-95
REV		
DISCP		
PE		
APPR RON WILLIAMS		

NATIONAL AERONAUTICS & SPACE ADMINISTRATION
LYNDON B. JOHNSON SPACE CENTER HOUSTON, TEXAS

BUILDING 24
CENTRAL HEATING AND COOLING PLANT

SCHEMATIC DIAGRAMS
SWG-24-4

PROJECT NO. | SHEET NO. ___ OF ___
PROJECT ID WR
CODE IDENT. NO. 21356 | SIZE E | DWG NO. E-24-50A

COPYRIGHT © 2010 BURNS & McDONNELL ENGINEERING COMPANY, INC.