NOTES - UNLESS OTHERWISE SPECIFIED:

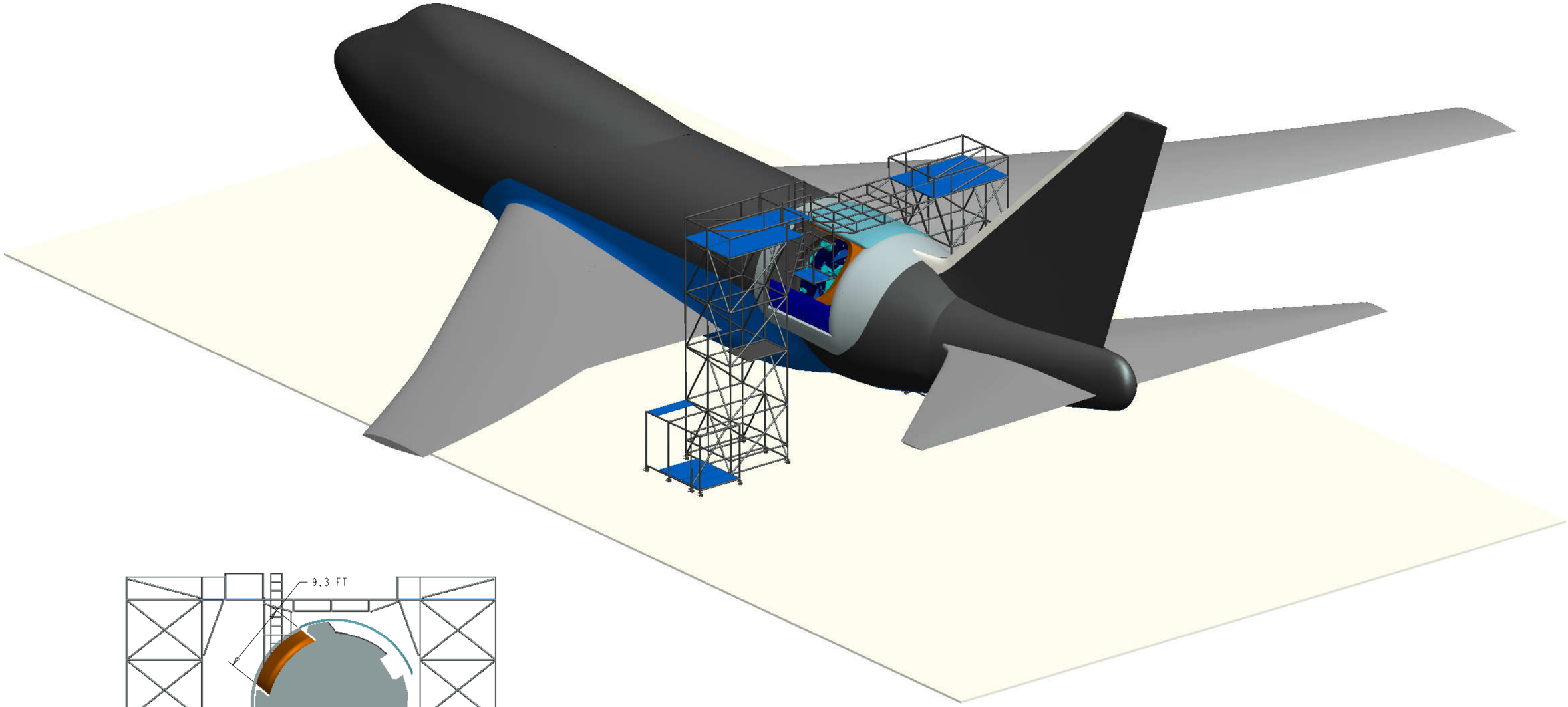

SOFIA SCAFFOLD CONCEPT, REAR ISO VIEW
TA CAVITY ACCESS

SCALE 0.013

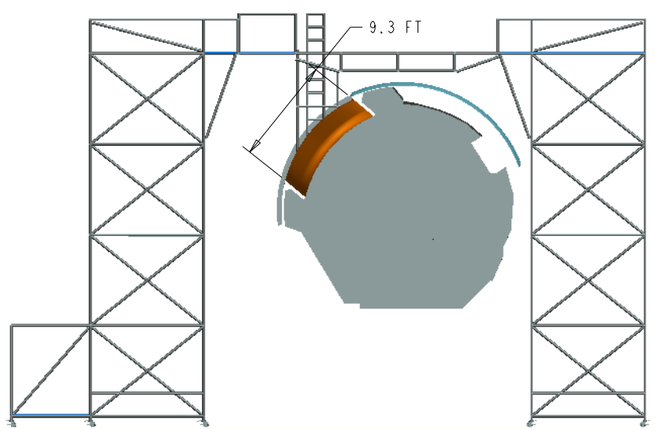

SOFIA SCAFFOLD,
TA CAVITY CROSS SECTION

NATIONAL AERONAUTICS AND SPACE ADMINISTRATION
DRYDEN FLIGHT RESEARCH CENTER
EDWARDS, CALIFORNIA

TITLE

SOFIA SCAFFOLD CONCEPT

SIZE	CASE	DWG. NO.	REV.
D	1JYR2		
SCALE: 0.002	CI NO.		SHEET 1 OF 2

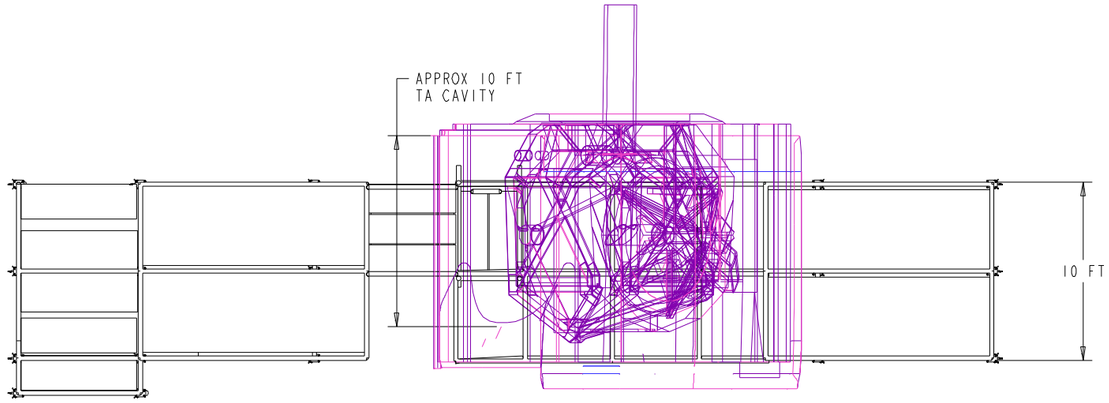

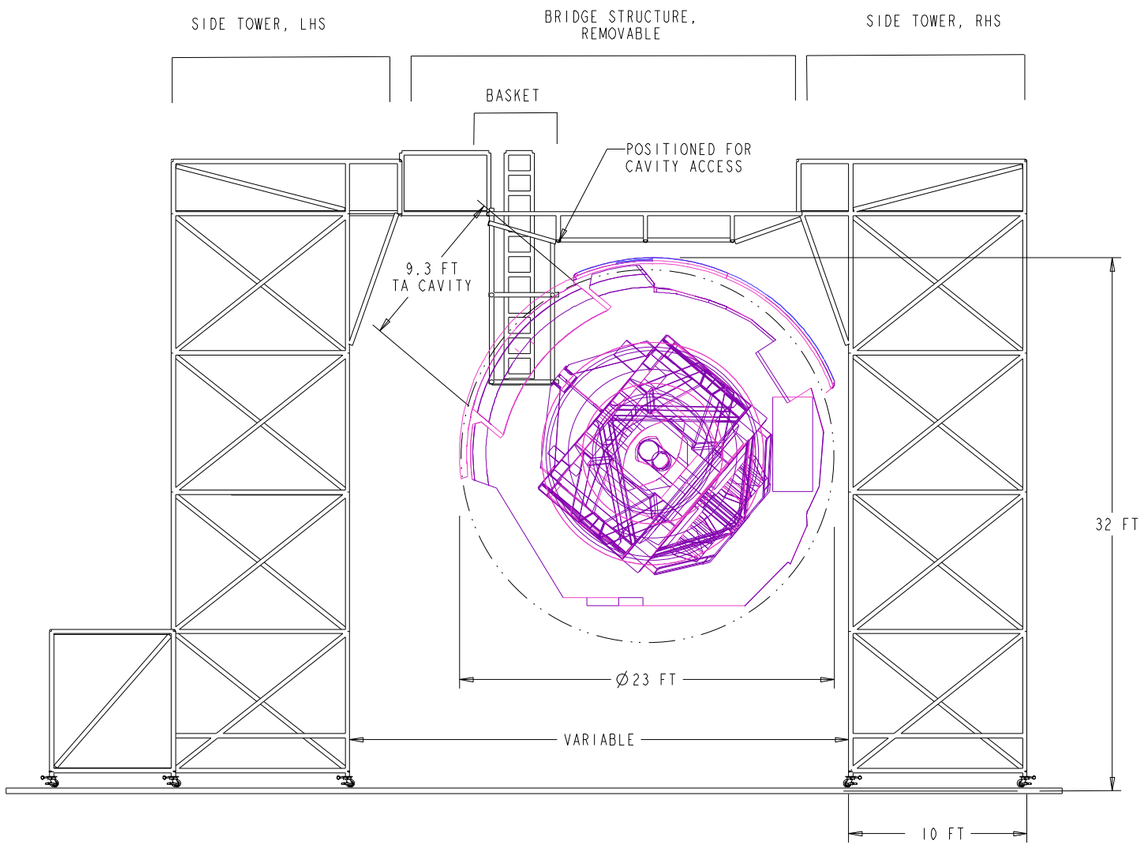

SOFIA SCAFFOLD, TA CAVITY ACCESS
VIEW LOOKING FWD

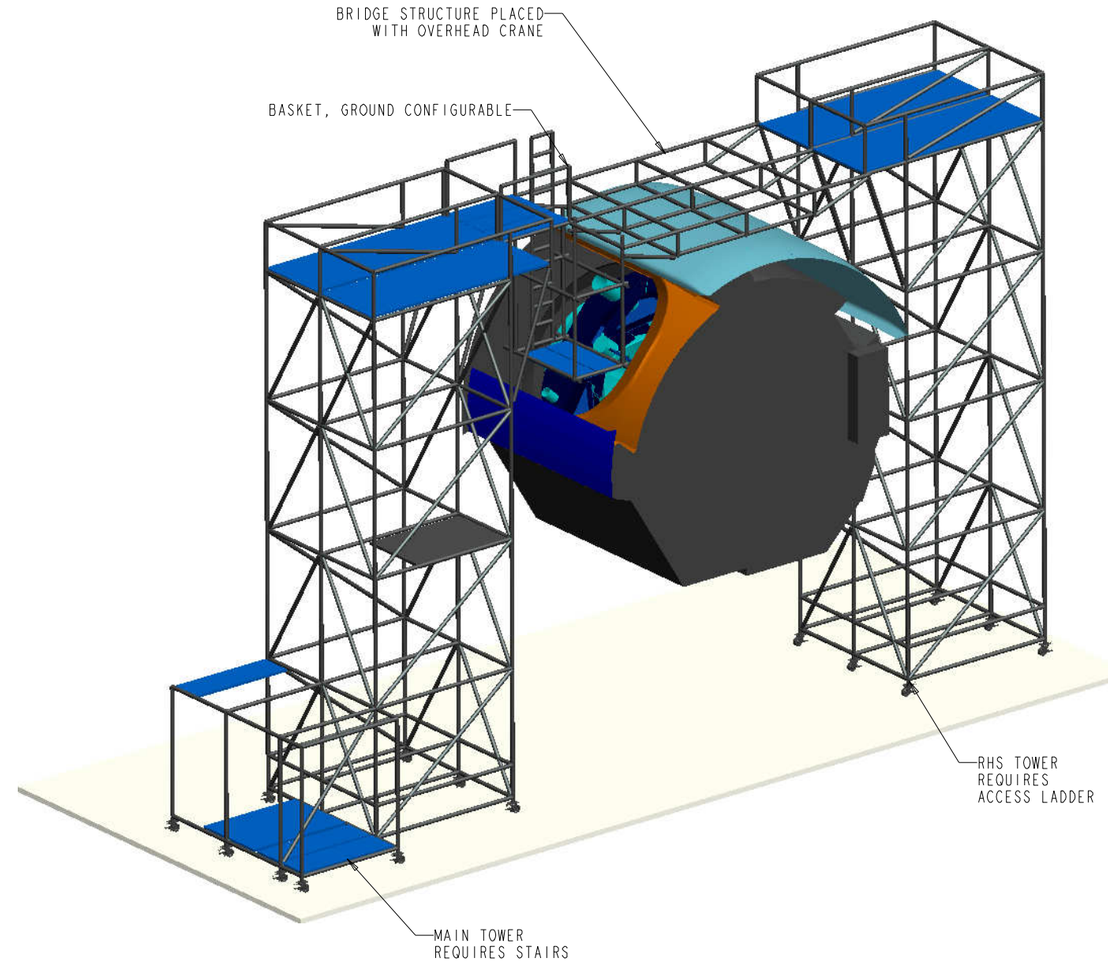

SOFIA SCAFFOLD CONCEPT, REAR ISO VIEW

SCALE 0.020

NATIONAL AERONAUTICS AND SPACE ADMINISTRATION
DRYDEN FLIGHT RESEARCH CENTER
EDWARDS, CALIFORNIA

TITLE

SOFIA SCAFFOLD CONCEPT

SIZE	CAGE	DWG. NO.	REV.
D	1JYR2		

SCALE: 0.007 | CI NO. | SHEET 2 OF 2