National Aeronautics and Space Administration

DRYDEN FLIGHT RESEARCH CENTER

PROJECT TITLE:

REPAIR BUILDING 4820 FLIGHT LOADS LABORATORY POWER CONTROL UPGRADE

AREA PLAN
NOT TO SCALE

NORTH

VICINITY MAP
NOT TO SCALE

NORTH

DRYDEN FLIGHT RESEARCH CENTER – MAIN COMPLEX SITE PLAN

LICENSED ARCHITECT
JOHN BRUCE CAMINO
C23740
Ren. 10/31/11
STATE OF CALIFORNIA

DEVELOPMENT ONE, INC.
1611 East Fourth Street, Suite 250
Santa Ana, California 92701
J.Bruce Camino, Architect, AIA, NCARB
(714) 689-0298
(714) 648-0197 FAX

DATE	SYM	REVISION	BY	A'PD
10/19/09		100% FINAL DESIGN		

NATIONAL AERONAUTICS AND SPACE ADMINISTRATION
DRYDEN FLIGHT RESEARCH CENTER
EDWARDS, CA

DRAWING TITLE
TITLE SHEET

PROJECT TITLE
REPAIR BUILDING 4820 FLIGHT LOADS LABORATORY POWER CONTROL UPGRADE

APPROVALS	DATE
Chief Facilities Engineering & Asset Mgmt. Office	6-2-10
Project Manager	5-13-10
Security Office	5/25/10
Project Requestor	6.17.10
Safety Office	5/28/10
Telecom	5/26/10

DRAWN BY	K.SARGENT	DATE STRTD	09/17/08
W.O. #	95099	DATE PRNTD	04/26/10
PLOT SCALE	TRADE SH. No.	T-001	
CAD FILE NAME		SHEET No. 1 of 125	

GENERAL

DWGNUM	DESCRIPTION
T-001	TITLE SHEET

GENERAL

DWGNUM	DESCRIPTION
G-001	DRAWING INDEX

ARCHITECTURAL

DWGNUM	DESCRIPTION
A-001	PLATFORM PLAN
A-002	FLOOR PLAN

DEMOLITION

DWGNUM	DESCRIPTION
D-001	FLOOR DEMOLITION PLAN
D-002	480 VAC POWER SYSTEM PCC TO PATCH PANELS DEMOLITION PLAN
D-003-01	COOLING WATER SYSTEM DEMOLITION PLAN
D-003-02	COOLING WATER SYSTEM DEMOLITION PLAN
D-004	POWER CONTROL CABINETS DEMOLITION PLAN

ELECTRICAL

DWGNUM	DESCRIPTION
E-001	ELECTRICAL NOTES, SYMBOLS & ABBREVIATIONS
E-002	MEZZANINE POWER PLAN
E-003	FLOOR POWER PLAN
E-004	480VAC POWER SYSTEM ONE-LINE DIAGRAM
E-005	480VAC POWER SYSTEM PCC TYPE A - TYPICAL 3 LINE DIAGRAM
E-006-01	480VAC POWER SYSTEM PCC TYPE A CABLE SCHEDULE (SHT. 1)
E-006-02	480VAC POWER SYSTEM PCC TYPE A CABLE SCHEDULE (SHT. 2)
E-007	480VAC POWER SYSTEM PCC TYPE B - TYPICAL 3 LINE DIAGRAM
E-008-01	480VAC POWER SYSTEM PCC TYPE B CABLE SCHEDULE (SHT. 1)
E-008-02	480VAC POWER SYSTEM PCC TYPE B CABLE SCHEDULE (SHT. 2)
E-009	480VAC POWER SYSTEM PCC TYPE C - TYPICAL 3 LINE DIAGRAM
E-010	480VAC POWER SYSTEM PCC TYPE C CABLE SCHEDULE
E-011-01	MEZZANINE POWER PLAN AND DETAILS SHEET 1
E-011-02	MEZZANINE POWER PLAN AND DETAILS SHEET 2
E-011-03	MEZZANINE POWER PLAN AND DETAILS SHEET 3
E-012-01	MAIN FLOOR PLAN DETAIL
E-012-02	MAIN FLOOR POWER ELEVATIONS
E-013	480VAC POWER SYSTEM TYPICAL ISOLATION SWITCH
E-014	480VAC POWER SYSTEM TYPICAL ISOLATION SWITCH CABLE SCHEDULE
E-015	480VAC POWER SYSTEM PCC TYPE A - PATCH PANEL FABRICATION AND LAYOUT - TYPICAL
E-016	480VAC POWER SYSTEM PCC TYPE B - PATCH PANEL FABRICATION AND LAYOUT - TYPICAL
E-017	480VAC POWER SYSTEM PCC TYPE C - PATCH PANEL FABRICATION AND LAYOUT - TYPICAL
E-018	PCC TYPE C, 480VAC TO 48VAC TRANSFORMERS ENCLOSURE FABRICATION AND LAYOUT
E-019	480VAC POWER SYSTEM TYPE C TRANSFORMERS ENCLOSURE CABLE SCHEDULE
E-020	PCC 120VAC PANEL SCHEDULE
E-021-01	480VAC POWER SYSTEM PCC TYPE A AND B TYPICAL SCHEMATIC (SHT. 1)
E-021-02	480VAC POWER SYSTEM PCC TYPE A AND B TYPICAL SCHEMATIC (SHT. 2)
E-021-03	480VAC POWER SYSTEM PCC TYPE A AND B TYPICAL SCHEMATIC (SHT. 3)
E-021-04	480VAC POWER SYSTEM PCC TYPE A AND B TYPICAL SCHEMATIC (SHT. 4)
E-022-01	480VAC POWER SYSTEM PCC TYPE C TYPICAL SCHEMATIC (SHT. 1)
E-022-02	480VAC POWER SYSTEM PCC TYPE C TYPICAL SCHEMATIC (SHT. 2)
E-022-03	480VAC POWER SYSTEM PCC TYPE C TYPICAL SCHEMATIC (SHT. 3)
E-023	480VAC POWER SYSTEM PCC CIRCUIT BREAKER CONTROL SCHEMATIC
E-030	480VAC CABLE TRAY LINE SIDE PLAN VIEW
E-031	480VAC CABLE TRAY LINE SIDE ELEVATION VIEW J.B. #2-6
E-032	480VAC CABLE TRAY LINE SIDE ELEVATION VIEW J.B. #7-10
E-033	480VAC CABLE TRAY JUNCTION BOX #2 PLAN & ELEVATION
E-034	480VAC CABLE TRAY JUNCTION BOX #3 PLAN & ELEVATION
E-035	480VAC CABLE TRAY JUNCTION BOX #4 PLAN & ELEVATION
E-036	480VAC CABLE TRAY JUNCTION BOX #5 PLAN & ELEVATION
E-037	480VAC CABLE TRAY JUNCTION BOX #6 PLAN & ELEVATION
E-038	480VAC CABLE TRAY JUNCTION BOX #7 PLAN & ELEVATION
E-039	480VAC CABLE TRAY JUNCTION BOX #8 PLAN & ELEVATION
E-040	480VAC CABLE TRAY JUNCTION BOX #9 PLAN & ELEVATION
E-041	480VAC CABLE TRAY JUNCTION BOX #10 PLAN & ELEVATION
E-050	480VAC CABLE TRAY LOAD SIDE PLAN & ELEVATION VIEW
E-051	480VAC CABLE TRAY LOAD SIDE ISOMETRIC VIEW
E-052	480VAC CABLE TRAY LOAD SIDE PCC A1 THROUGH PCC A3
E-053	480VAC CABLE TRAY LOAD SIDE PCC A4 AND PCC A5
E-054	480VAC CABLE TRAY LOAD SIDE PCC B1 AND PCC B2
E-055	480VAC CABLE TRAY LOAD SIDE PCC B3 AND PCC B4
E-056	480VAC CABLE TRAY LOAD SIDE PCC B5 AND PCC B6
E-057	480VAC CABLE TRAY LOAD SIDE PCC C1 AND PCC C2
E-058	480VAC CABLE TRAY LOAD SIDE PCC A3

INSTRUMENTATION

DWGNUM	DESCRIPTION
I-001	POWER CONTROL CABINET (PCC) SYSTEM NETWORK SCHEMATIC
I-002	PCC SYSTEM ETHERNET NETWORK IP ADRESSES
I-005	CABLE TERMINATION DETAILS
I-010	PCC THERMAL CONTROLLER TYPICAL - CHASSIS LAYOUT
I-011-01	PCC THERMAL CONTROLLER ANALOG OUTPUTS TYPICAL (SHT. 1)
I-011-02	PCC THERMAL CONTROLLER ANALOG OUTPUTS TYPICAL (SHT. 2)
I-011-03	PCC THERMAL CONTROLLER ANALOG OUTPUTS TYPICAL (SHT. 3)
I-012	PCC THERMAL CONTROLLER DIGITAL INPUTS TYPICAL
I-014	PCC THERMAL CONTROLLER DIGITAL OUTPUTS DETAILS
I-020-01	PCC TYPE A 200-AMP ZERO FIRED SCR CABINET LAYOUT - SHEET 1
I-020-02	PCC TYPE A 200-AMP ZERO FIRED SCR CABINET LAYOUT
I-020-03	PCC TYPE A 200-AMP ZERO FIRED SCR CABINET LAYOUT - SHEET 3
I-021	PCC TYPICAL FABRICATION DETAILS
I-030	PCC SCR CONTROLLER TYPICAL - CHASSIS LAYOUT
I-031-01	PCC SCR CONTROLLER ANALOG INPUTS TYPE A AND B (SHT. 1)
I-031-02	PCC SCR CONTROLLER ANALOG INPUTS TYPE A AND B (SHT. 2)
I-031-03	PCC SCR CONTROLLER ANALOG INPUTS TYPE A AND B (SHT. 3)
I-032-01	PCC SCR CONTROLLER DIGITAL INPUTS TYPICAL (SHT. 1)
I-032-02	PCC SCR CONTROLLER DIGITAL INPUTS TYPICAL (SHT. 2)
I-033	PCC SCR CONTROLLER DIGITAL OUTPUTS TYPICAL
I-035-01	PCC SCR CONTROLLER ANALOG INPUTS TYPE C (SHT. 1)
I-035-02	PCC SCR CONTROLLER ANALOG INPUTS TYPE C (SHT. 2)
I-035-03	PCC SCR CONTROLLER ANALOG INPUTS TYPE C (SHT. 3)
I-046	PCC INCOMING LINE VOLTAGE TRANSMITTERS WIRING - TYPICAL
I-047	PCC TYPE C - "A" PHASE VOLTAGE TRANSMITTERS WIRING - TYPICAL
I-048	PCC TYPE C - "B" PHASE VOLTAGE TRANSMITTERS WIRING - TYPICAL
I-049	PCC TYPE C - "C" PHASE VOLTAGE TRANSMITTERS WIRING - TYPICAL
I-050	PCC "A" PHASE SCR ZERO FIRED TRIGGER MODULE WIRING DIAGRAM - TYPICAL
I-051	PCC "B" PHASE SCR ZERO FIRED TRIGGER MODULE WIRING DIAGRAM - TYPICAL
I-052	PCC "C" PHASE SCR ZERO FIRED TRIGGER MODULE WIRING DIAGRAM - TYPICAL
I-055	PCC GROUND FAULT UNIT #1 WIRING TYPICAL
I-056	PCC GROUND FAULT UNIT #2 WIRING TYPICAL
I-057	PCC PHASE ANGLE CONTROL PHASE "A" FIRING MODULE WIRING - TYPICAL
I-058	PCC PHASE ANGLE CONTROL PHASE "B" FIRING MODULE WIRING - TYPICAL
I-059	PCC PHASE ANGLE CONTROL PHASE "C" FIRING MODULE WIRING - TYPICAL
I-060-01	PCC USER INTERLOCK PATCH PANEL LAYOUT SHEET 1
I-060-02	PCC USER INTERLOCK PATCH PANEL LAYOUT SHEET 2
I-061	PCC USER INTERLOCK PATCH PANEL SCHEMATIC
I-062	PCC USER INTERLOCK PATCH PANEL CABLE PIN-OUT DETAILS
I-065	POWER CONTROL CABINETS CURRENT TRANSFORMERS WIRING - TYPICAL
I-070	PCC SAFETY RELAY WIRING TYPICAL
I-071	POWER CONTROL CABINET SAFETY RELAY INTER-CONNECTIONS NETWORK
I-080	INTERLOCK LOGIC DIAGRAM
I-083	PCC INTERLOCK DEFINTIONS AND LOCATIONS
I-090	HMI TOUCH SCREEN ENCLOSURE FABRICATION AND LAYOUT
I-091	HMI ENCLOSURE CONNECTION DETAILS
I-100	PCC SCR CONTROLLER AND THERMAL CONTROLLER PANEL LAYOUT - TYPICAL
I-101	PCC FUSE PANEL LAYOUT TYPICAL
I-102	TYPE A 200 AMP ZERO FIRE SCR PANEL LAYOUT TYPICAL
I-103	TYPE B 100 AMP ZERO FIRE SCR PANEL LAYOUT TYPICAL
I-104	TYPE C 100 AMP PHASE ANGLE SCR PANEL LAYOUT TYPICAL
I-105	PCC SWING OUT PANEL LAYOUT ZERO FIRED
I-106	PCC SWING OUT PANEL LAYOUT PHASE FIRED
I-107	PCC TYPE C VT PANEL LAYOUT
I-110-01	PCC 120VAC & 24VDC POWER DISTRIBUTION DETAILS TYPICAL - SHEET 1
I-110-02	PCC 120VAC & 24VDC POWER DISTRIBUTION DETAILS TYPICAL - SHEET 2
I-111	PCC 120 VAC AND 24 VDC POWER DISTRIBUTION PANEL LAYOUT - TYPICAL
I-120	PCC STACK LIGHT WIRING - TYPICAL

PROCESS

DWGNUM	DESCRIPTION
M-001	MECHANICAL SYMBOLS & ABBREVIATIONS
M-002	PCC GLYCOL/WATER COOLING SYSTEM P&ID
M-003	PCC HEAT SINK CONNECTION DETAILS
M-004	PCC GLYCOL/WATER COOLING SYSTEM INSTALLATION PLAN VIEW

GENERAL NOTES

1. ALL NEW EQUIPMENT SPECIFIED IN THIS DESIGN MAY BE SUBSTITUTED WITH GOVERNMENT APPROVED EQUALS.

WILLIAM L. CARPENTER JR. REGISTERED ENGINEER No. 00022979 STATE OF TENNESSEE

DEVELOPMENT ONE, INC.
1611 East Fourth Street, Suite 250
Santa Ana, California 92701
J.Bruce Camino, Architect, AIA, NCARB
(714) 689-0298
(714) 648-0197 FAX

DATE	SYM	REVISION	BY	A'PD
10/19/09		100% FINAL DESIGN		

NATIONAL AERONAUTICS AND SPACE ADMINISTRATION
DRYDEN FLIGHT RESEARCH CENTER
EDWARDS, CA

DRAWING TITLE
DRAWING INDEX

PROJECT TITLE
REPAIR BUILDING 4820 FLIGHT LOADS LABORATORY POWER CONTROL UPGRADE

APPROVALS	DATE
Chief, Facilities Engineering & Assets Mgmt. Office	6-2-10
Project Manager	5-13-10
Quality Office	5/25/10
Project Requestor	5-17-10
Safety Office	6-1-10
Telecom	5/26/10

DRAWN BY	M. HENNIGH	DATE STRTD	09/17/08
W.O. #	95099	DATE PRNTD	04/26/10
PLOT SCALE		TRADE SH. No.	G-001
CAD FILE NAME			SHEET No. 2 of 125

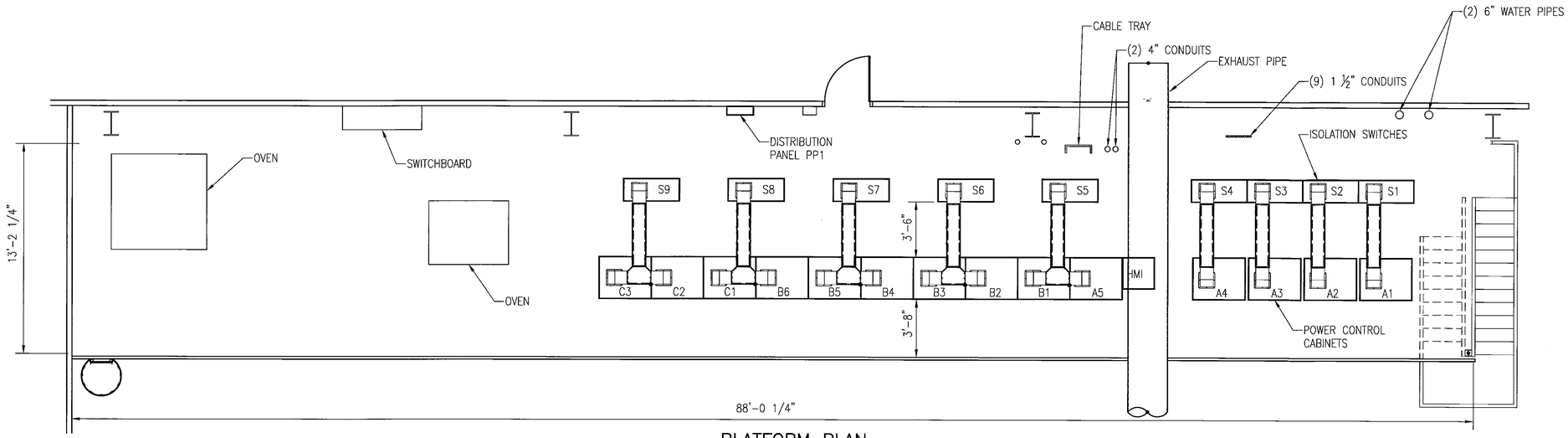

PLATFORM PLAN
SCALE: 1/4" = 1'-0"

WILLIAM L. CARPENTER, JR. REGISTERED ENGINEER LICENSE NO. 0002278 COMMERCIAL STATE OF TENNESSEE

DEVELOPMENT ONE, INC.
1611 East Fourth Street, Suite 250
Santa Ana, California 92701
J.Bruce Camino, Architect, AIA, NCARB
(714) 689-0298
(714) 648-0197 FAX

DATE	SYM	REVISION	BY	A'PD
10/19/09		100% FINAL DESIGN		

NATIONAL AERONAUTICS AND SPACE ADMINISTRATION
DRYDEN FLIGHT RESEARCH CENTER
EDWARDS, CA

DRAWING TITLE
PLATFORM PLAN

PROJECT TITLE
REPAIR BUILDING 4820 FLIGHT LOADS LABORATORY
POWER CONTROL UPGRADE

APPROVALS	DATE
Chief, Facilities Engineering & Depot Mgmt. Office	5-27-10
Project Manager	5/13/10
Security Office	5/25/10
Project Requestor	5-17-10
Safety Office	6-7-10
Telecom	5/26/10

DRAWN BY	M. HENNIGH	DATE STRTD	09/17/08
W.O. #	95099	DATE PRNTD	04/26/10
PLOT SCALE		TRADE SH. No.	A-001
CAD FILE NAME			SHEET No. 3 of 125

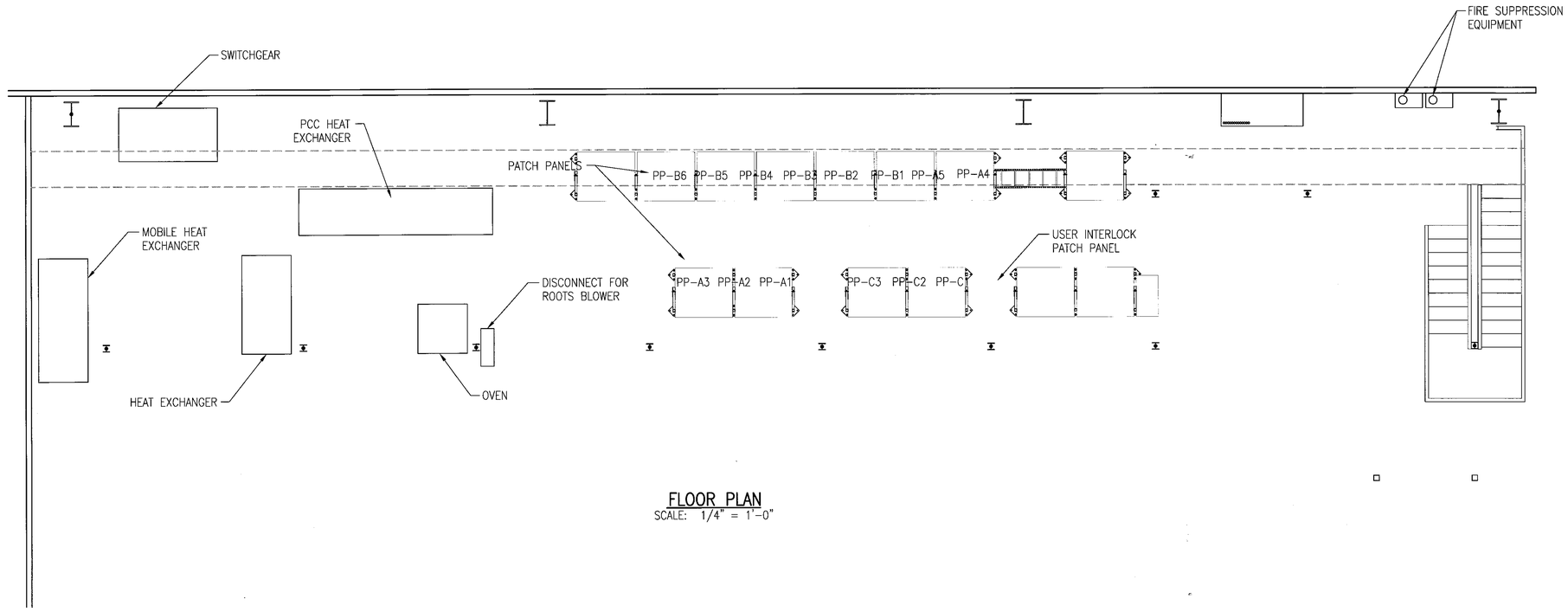

FLOOR PLAN
SCALE: 1/4" = 1'-0"

WILLIAM L. CARPENTER
REGISTERED ENGINEER
COMMISSION NO. 000223978
STATE OF TENNESSEE

DEVELOPMENT ONE, INC.
1611 East Fourth Street, Suite 250
Santa Ana, California 92701
J.Bruce Camino, Architect, AIA, NCARB
(714) 689-0298
(714) 648-0197 FAX

DATE	SYM	REVISION	BY	A'PD
10/19/09		100% FINAL DESIGN		

NATIONAL AERONAUTICS AND SPACE ADMINISTRATION
DRYDEN FLIGHT RESEARCH CENTER
EDWARDS, CA

DRAWING TITLE
FLOOR PLAN

PROJECT TITLE
REPAIR BUILDING 4820 FLIGHT LOADS LABORATORY
POWER CONTROL UPGRADE

APPROVALS	DATE
Chief, Facilities Engineering & Asset Mgmt. Office	5-2-10
Project Manager	5-13-10
Security Office	5/25/10
Project Inspector	5-17-10
Safety Office	6-1-10
Telecom	5/26/10

DRAWN BY	M. HENNIGH	DATE STRTD	09/17/08
W.O. #	95099	DATE PRNTD	04/26/10
PLOT SCALE		TRADE Sht. No.	A-002
CAD FILE NAME			SHEET No. 4 of 125

NOTES:

1. REMOVE CABLE TRAY AND WIRING FROM THE GROUND FLOOR TO THE BOTTOM OF THE MEZZANINE.

2 REMOVE WIRING AND CONDUIT FROM PP1-B6 TO EACH HEAT EXCHANGER.

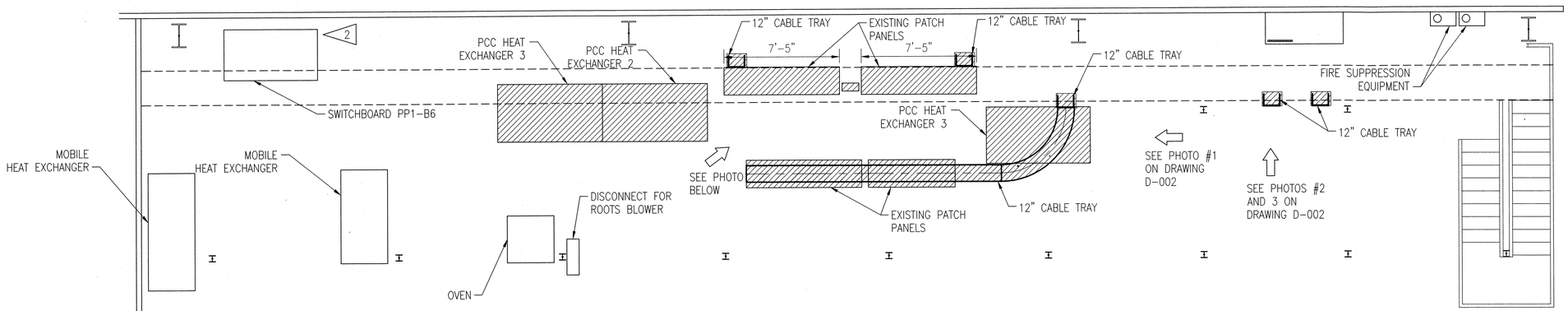

FLOOR PLAN
SCALE: 1/4" = 1'-0"

PATCH PANELS

LEGEND

ITEMS TO BE REMOVED AND DISCARDED

WILLIAM L. CARPENTER REGISTERED ENGINEER No. 0102378 STATE OF TENNESSEE

DEVELOPMENT ONE, INC.
1611 East Fourth Street, Suite 250
Santa Ana, California 92701
J.Bruce Camino, Architect, AIA, NCARB
(714) 689-0298
(714) 648-0197 FAX

DATE	SYM	REVISION	BY	A'PD
10/19/09		100% FINAL DESIGN		

NATIONAL AERONAUTICS AND SPACE ADMINISTRATION
DRYDEN FLIGHT RESEARCH CENTER
EDWARDS, CA

DRAWING TITLE
FLOOR DEMOLITION PLAN

PROJECT TITLE
REPAIR BUILDING 4820 FLIGHT LOADS LABORATORY POWER CONTROL UPGRADES

APPROVALS	DATE
Chief, Facilities Engineering & Asset Mgmt. Office	6-17-10
Program Office	6-17-10
Facility Office	6/17/10
Project Manager	6-17-10
Safety Office	6/17/10
Telecom	6/17/10

DRAWN BY	M. HENNIGH	DATE STRTD	09/17/08
W.O. #	95099	DATE PRNTD	04/26/10
PLOT SCALE		TRADE SH. No.	D-001
CAD FILE NAME			SHEET No. 5 of 125

PHOTO #1

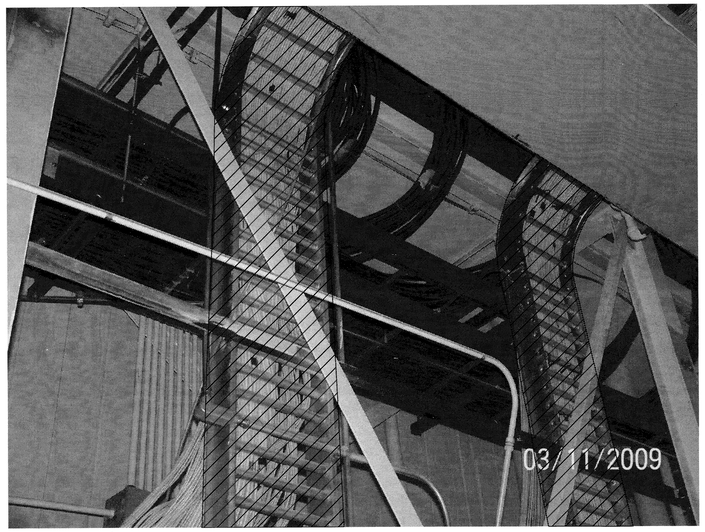

PHOTO #2

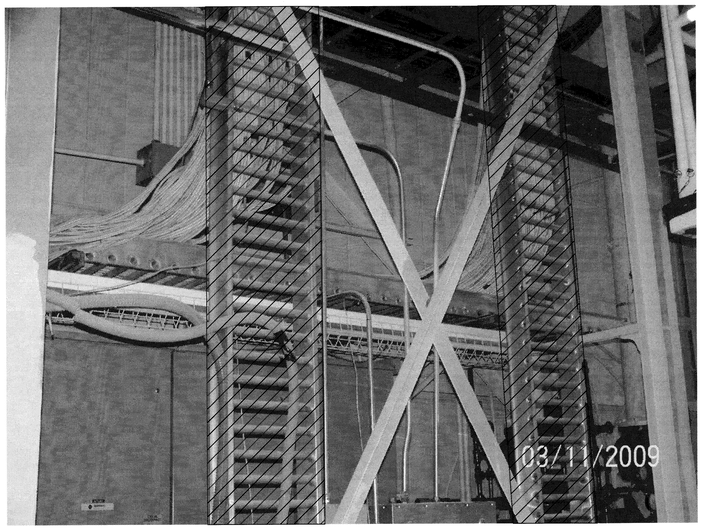

PHOTO #3

LEGEND

ITEMS TO BE REMOVED AND DISCARDED

WILLIAM L. CARPENTER
REGISTERED ENGINEER
No. 0002978
COMMERCE
STATE OF TENNESSEE

DEVELOPMENT ONE, INC.
1611 East Fourth Street, Suite 250
Santa Ana, California 92701
J.Bruce Camino, Architect, AIA, NCARB
(714) 689-0298
(714) 648-0197 FAX

DATE	SYM	REVISION	BY	A'PD
10/19/09		100% FINAL DESIGN		

NATIONAL AERONAUTICS AND SPACE ADMINISTRATION
DRYDEN FLIGHT RESEARCH CENTER
EDWARDS, CA

DRAWING TITLE
480 VAC POWER SYSTEM
PCC TO PATCH PANELS
DEMOLITION PLAN

PROJECT TITLE
REPAIR BUILDING 4820 FLIGHT LOADS LABORATORY
POWER CONTROL UPGRADE

APPROVALS	DATE
Chief, Facilities Engineering & Asset Mgmt. Office	6-2-10
Project Manager	5.13.10
Security Office	5/25/10
Project Requestor	5.17.10
Safety Office	6-7-10
Telecom	5/26/10

DRAWN BY	M. HENNIGH	DATE STRTD	09/17/08
W.O. #	95099	DATE PRNTD	04/26/10
PLOT SCALE		TRADE SH. No.	D-002
CAD FILE NAME		SHEET No. 6 of 125	

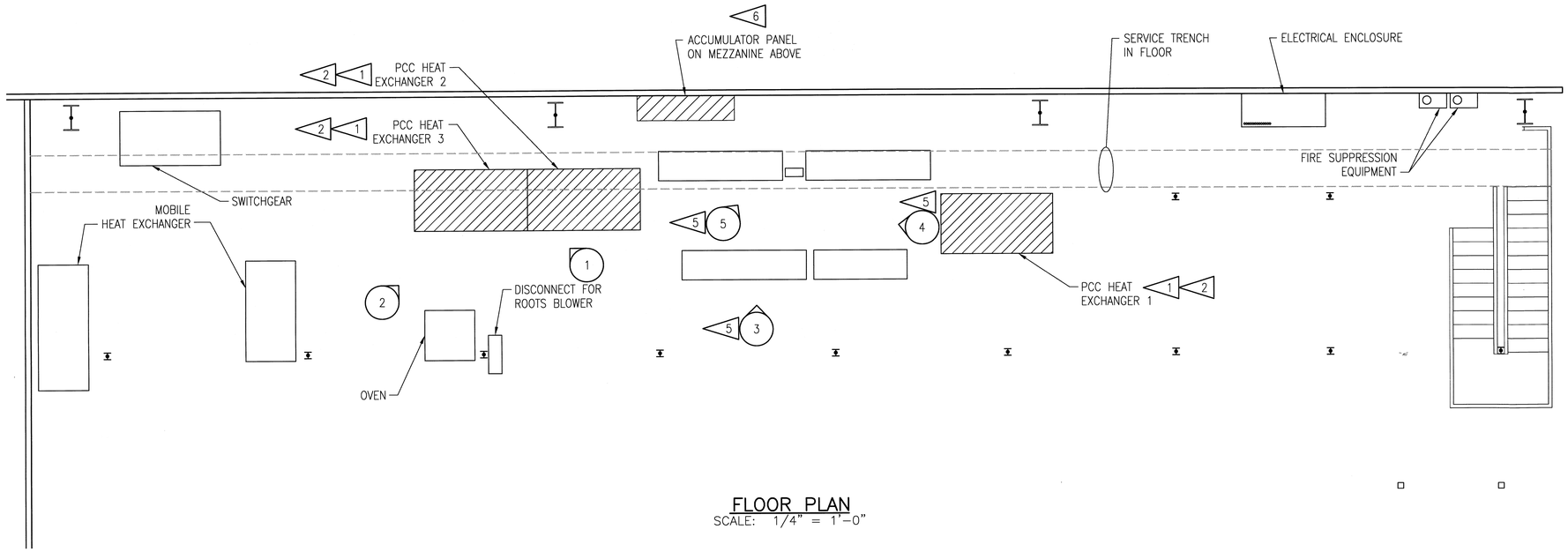

FLOOR PLAN
SCALE: 1/4" = 1'-0"

NOTES:

1. DEMOLISH AND REMOVE THREE SETS OF COPPER DEMINERALIZED WATER PIPING FROM HEAT EXCHANGERS 1, 2, AND 3 TO THE POWER CONTROL CABINET INTERFACE ON THE MEZZANINE. SEE DEMO DRAWING D-004 FOR LOCATIONS OF EXISTING POWER CONTROL CABINETS. PIPE SUPPORTS AND CONDENSATE DRIP PANS ARE TO REMAIN IN PLACE FOR FUTURE USE.
2. DEMOLISH AND REMOVE PCC HEAT EXCHANGER UNITS 1, 2, AND 3.
3. REMOVE AND DISCARD COPPER SUPPLY AND RETURN HEADERS INCLUDING BRANCH LINES AND UNISTRUT PIPE CLAMPS, UP TO EXISTING POWER CONTROL CABINETS. SEE D-004 FOR PCC LOCATIONS.
4. UPON COMPLETION OF DEMOLITION WORK, REMOVE ALL REMAINING DEBRIS FROM REMAINING CONDENSATE DRIP PAN.
5. PHOTO TAKEN JUST BELOW MEZZANINE.
6. REMOVE AND DISCARD ACCUMULATOR PANEL AND ASSOCIATED PIPING ON MEZZANINE LEVEL. SEE PHOTO #2 ON DRAWING D-004 FOR VIEW.

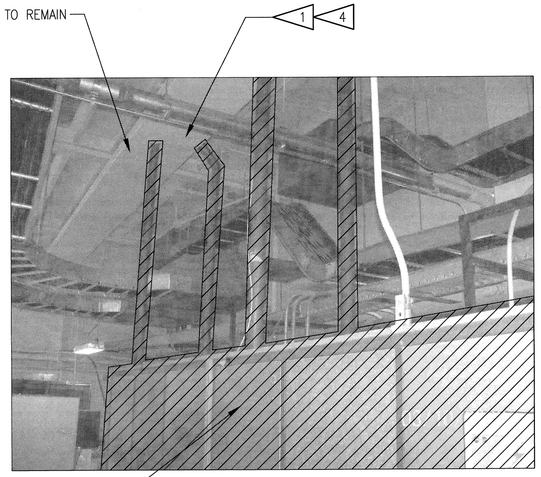

DEMOLITION PHOTO #1

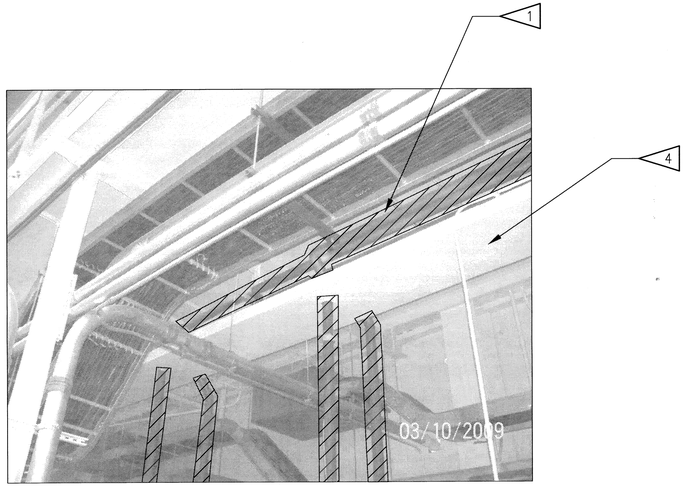

DEMOLITION PHOTO #2

LEGEND

ITEMS TO BE REMOVED AND DISCARDED

1 CAMERA VIEW ANGLE. FOR DEMOLITION PHOTOS #3, #4, & #5 SEE DRAWING D-003 SHEET 2.

WILLIAM L. CARPENTER REGISTERED ENGINEER No. 00022879 STATE OF TENNESSEE

DEVELOPMENT ONE, INC.
1611 East Fourth Street, Suite 250
Santa Ana, California 92701
J.Bruce Camino, Architect, AIA, NCARB
(714) 689-0298
(714) 648-0197 FAX

DATE	SYM	REVISION	BY	A'PD
10/19/09		100% FINAL DESIGN		

NATIONAL AERONAUTICS AND SPACE ADMINISTRATION
DRYDEN FLIGHT RESEARCH CENTER
EDWARDS, CA

DRAWING TITLE
COOLING WATER SYSTEM
DEMOLITION PLAN

PROJECT TITLE
REPAIR BUILDING 4820 FLIGHT LOADS LABORATORY
POWER CONTROL UPGRADE

APPROVALS	DATE
Chief Facilities Engineering & Asset Mgmt. Office	6-2-10
Project Manager	5-13-10
Security Office	5/25/10
Project Industrial	5-17-10
Safety Office	6-1-10
Telecom	5/24/10

DRAWN BY	M. HENNIGH	DATE STRTD	09/17/08
W.O. #	95099	DATE PRNTD	04/26/10
PLOT SCALE		TRADE SH. No.	D-003-01
CAD FILE NAME		SHEET No. 7 of 125	

NOTES:

1. FOR DEMOLITION NOTES AND DEMOLITION PHOTO LOCATIONS SEE DRAWING D-003 SHEET 1.

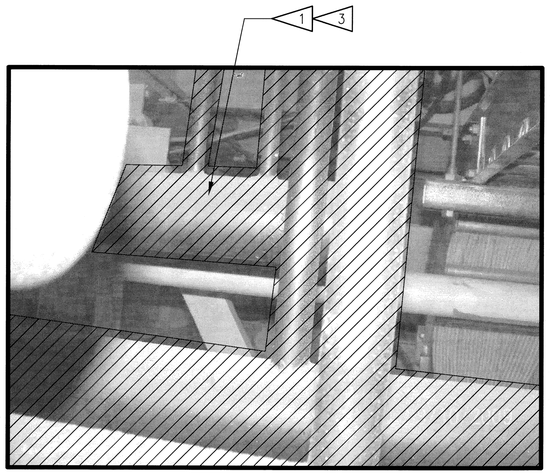

DEMOLITION PHOTO #3

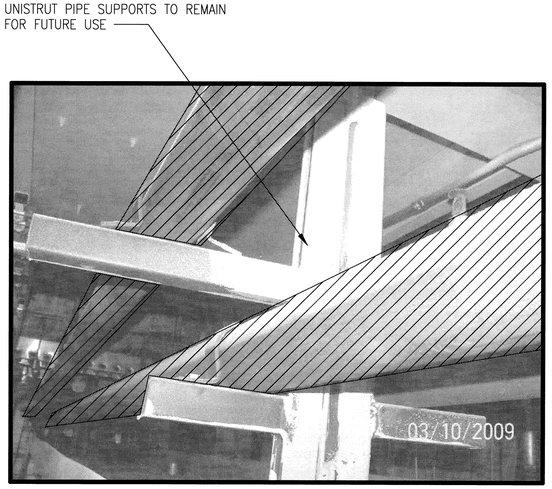

DEMOLITION PHOTO #4

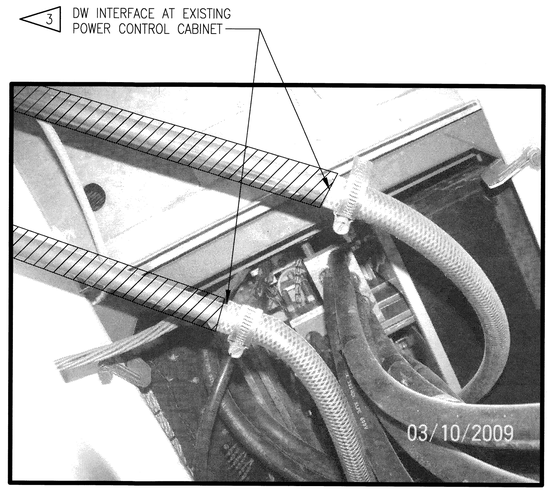

DEMOLITION PHOTO #5

WILLIAM L. CARPENTER
REGISTERED ENGINEER
No. 0022979
STATE OF TENNESSEE

DEVELOPMENT ONE, INC.
1611 East Fourth Street, Suite 250
Santa Ana, California 92701
J.Bruce Camino, Architect, AIA, NCARB
(714) 689-0298
(714) 648-0197 FAX

DATE	SYM	REVISION	BY	A'PD
10/19/09		100% FINAL DESIGN		

NATIONAL AERONAUTICS AND SPACE ADMINISTRATION
DRYDEN FLIGHT RESEARCH CENTER
EDWARDS, CA

DRAWING TITLE
COOLING WATER SYSTEM
DEMOLITION PLAN

PROJECT TITLE
REPAIR BUILDING 4820 FLIGHT LOADS LABORATORY
POWER CONTROL UPGRADE

APPROVALS	DATE
Chief, Facilities Engineering & Asset Mgmt. Office	6-2-10
Project Manager	5.13.10
Security Office	5/25/10
Project Engineer	5.17.10
Safety Office	6-4-10
Telecom	5/26/10

DRAWN BY	M. HENNIGH	DATE STRTD	09/17/08
W.O. #	95099	DATE PRNTD	04/26/10
PLOT SCALE		TRADE SH. No.	D-003-02
CAD FILE NAME			SHEET No. 8 of 125

NOTES:

1. HEAT EXCHANGER ACCUMULATOR SHALL BE REMOVED BY THE MECHANICAL SUBCONTRACTOR.
2. RELOCATE OVEN #2 TO FLL GROUND LEVEL. FLL WILL RETAIN OVEN #2.

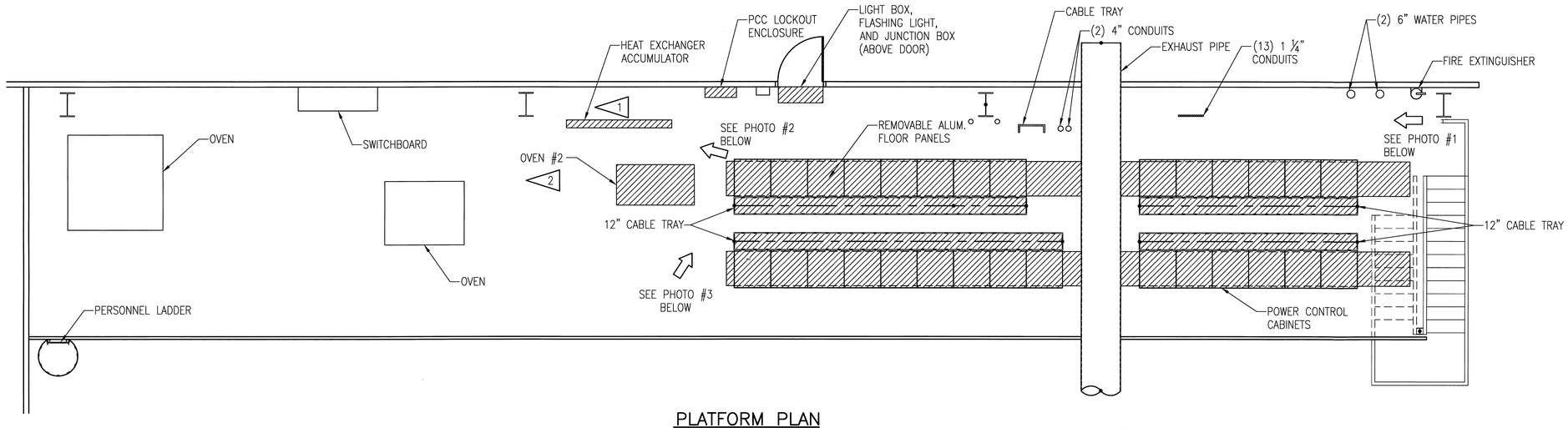

PLATFORM PLAN
SCALE: 1/4" = 1'-0"

PHOTO #1

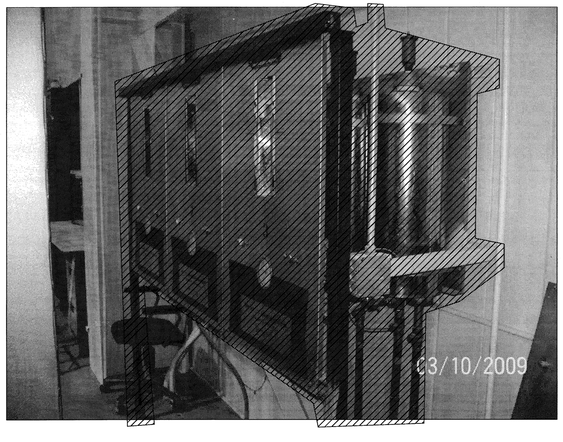

PHOTO #2

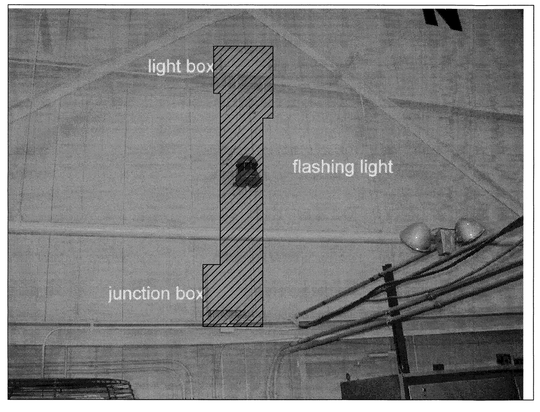

PHOTO #3

LEGEND

ITEMS TO BE REMOVED AND DISCARDED

WILLIAM L. CARPENTER
REGISTERED ENGINEER
No. 0002279
STATE OF TENNESSEE

DATE	SYM	REVISION	BY	A'PD
10/19/09		100% FINAL DESIGN		

DEVELOPMENT ONE, INC.
1611 East Fourth Street, Suite 250
Santa Ana, California 92701
J.Bruce Camino, Architect, AIA, NCARB
(714) 689-0298
(714) 648-0197 FAX

NATIONAL AERONAUTICS AND SPACE ADMINISTRATION
DRYDEN FLIGHT RESEARCH CENTER
EDWARDS, CA

DRAWING TITLE
POWER CONTROL CABINETS DEMOLITION PLAN

PROJECT TITLE
REPAIR BUILDING 4820 FLIGHT LOADS LABORATORY POWER CONTROL UPGRADE

APPROVALS	DATE
Chief, Facilities Engineering & Asset Mgmt. Office	6-2-10
Project Manager	5.13.10
Security Office	5/25/10
Project Requestor	5.17.10
Safety Office	6-1-10
Telecom	5/26/10

DRAWN BY	M. HENNIGH	DATE STRTD	09/17/08
W.O. #	95099	DATE PRNTD	04/26/10
PLOT SCALE		TRADE SH. No.	D-004
CAD FILE NAME			

SHEET No. 9 of 125

SINGLE LINE SYMBOLS

TRANSFORMER 2 WINDING
DELTA PRIMARY, GROUNDED
WYE SECONDARY

CT
3
1200/5
INST
CURRENT TRANSFORMER
WITH CURRENT RATIO
INDICATION (3 UNITS)

LOAD BREAK CONNECTOR

XXX
HP
MOTOR (XXX=HP RATING)

AC CONTACTS

40
MOLDED CASE CIRCUIT BREAKER,
40 AMP TRIP RATING

600
400
CIRCUIT BREAKER, FIXED TYPE 600 AMP
FRAME SET AT 400 AMPS

DISCONNECT SWITCH

CR
24VDC
COIL
CR = CONTROL RELAY
24 VOLTS DC

2A
FUSE 2A=FUSE AMP RATING

GROUND

LIGHTING LOAD

HTR
ELECTRIC HEAT EXCHANGER

SCR123
SEMICONDUCTOR, SILICON
CONTROLLED RECTIFIER

H123
HEATER COIL

OVERLOAD
SENSOR

SINGLE LINE SYMBOLS

N.O.
CONTACT
NORMALLY OPENED

N.C.
CONTACT
NORMALLY CLOSED

24V
MAGNETIC TRIP COIL
24 VOLTS, DC

480V PRIMARY

48V SECONDARY

TS123
1
2
200°F
TEMPERATURE SWITCH,
N.C.–OPENS ON RISING
TEMP.

LS123
1
2
MAINTAINED LIMIT SWITCH,
NORMALLY OPEN

FS123
1
2
FLOW ACTUATED SWITCH,
N.C. OPENS ON RISING FLOW

ES123
1
2
EMERGENCY STOP BUTTON
SWITCH, N.C.

MULTI–LINE SYMBOLS

CB123
1
2
3
4
5
6
CIRCUIT BREAKER,
THREE–POLE

DISC123
1
2
3
4
5
6
DISCONNECT SWITCH
THREE–POLE UNFUSED

FIELD DEVICES

WIRE DESIGNATORS
HOT, NEUTRAL, GROUND

DISCONNECT SWITCH, NON–FUSED

FVNR COMBINATION STARTER (SIZE AS NOTED)

MOTOR STARTER WITH CIRCUIT BREAKER

HAND/OFF/AUTO SWITCH

ABBREVIATIONS

BHDC	BARE HARD–DRAWN COPPER
BSDC	BARE SOFT–DRAWN COPPER
EOLR	END–OF–LINE RESISTOR
FVNR	FULL VOLTAGE NON–REVERSING
FA	FORCED AIR
OA	OPEN AIR
PCC	POWER CONTROL CABINET
PP	PATCH PANEL
PW	PROTECTOWIRE
SCR	SILICON CONTROLLED RECTIFIER
SD	SMOKE DETECTOR
SS	SOLID STATE
UV	ULTRA VIOLET
U.N.O.	UNLESS NOTED OTHERWISE
WLA	WARNING LIGHT ASSEMBLY

WIRING DIAGRAM ABBREVIATIONS

BK	BLACK
W	WHITE
R	RED
T	TAN
V	VIOLET
BL	BLUE
BR	BROWN
O	ORANGE
Y	YELLOW
G	GREEN
GR	GRAY

NOTES:

1. ALL WORK SHALL BE PERFORMED IN ACCORDANCE WITH THE LATEST EDITION OF THE NATIONAL ELECTRIC CODE, NFPA 70 AND THE NATIONAL ELECTRIC SAFETY CODE, C2.

WILLIAM L. CARPENTER
REGISTERED ENGINEER
No. 0022978
COMMERCIAL POWER
STATE OF TENNESSEE

DEVELOPMENT ONE, INC.
1611 East Fourth Street, Suite 250
Santa Ana, California 92701
J.Bruce Camino, Architect, AIA, NCARB
(714) 689-0298
(714) 648-0197 FAX

DATE	SYM	REVISION	BY	A'PD
10/19/09		100% FINAL DESIGN		

NATIONAL AERONAUTICS AND SPACE ADMINISTRATION
DRYDEN FLIGHT RESEARCH CENTER
EDWARDS, CA

DRAWING TITLE
ELECTRICAL NOTES,
SYMBOLS, & ABBREVIATIONS

PROJECT TITLE
REPAIR BUILDING 4820 FLIGHT LOADS LABORATORY
POWER CONTROL UPGRADE

APPROVALS	DATE
Chief Facilities Engineering & Asset Mgmt. Office	6-2-10
Project Manager	5.13.10
Security Office	5/25/10
Project Engineer	5-17-10
Safety Office	6-1-10
Telecom	5/24/10

DRAWN BY	M. HENNIGH	DATE STRTD	09/17/08
W.O. #	95099	DATE PRNTD	04/26/10
PLOT SCALE		TRADE Sht. No.	E-001
CAD FILE NAME			SHEET No. 10 of 125

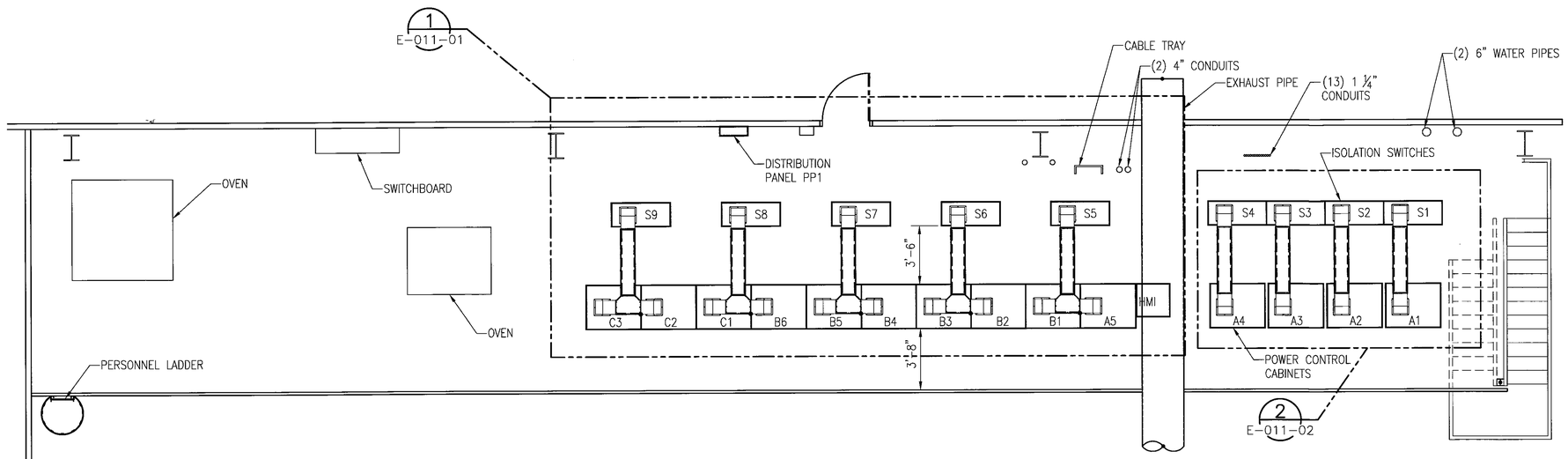

MEZZANINE POWER PLAN
SCALE: 1/4" = 1'-0"

BRIAN JEROME GARLAND
REGISTERED ENGINEER
AGRICULTURE
No. 113330
STATE OF TENNESSEE
5-15-10

DEVELOPMENT ONE, INC.
1611 East Fourth Street, Suite 250
Santa Ana, California 92701
J.Bruce Camino, Architect, AIA, NCARB
(714) 689-0298
(714) 648-0197 FAX

DATE	SYM	REVISION	BY	A'PD
10/19/09		100% FINAL DESIGN		

NATIONAL AERONAUTICS AND SPACE ADMINISTRATION
DRYDEN FLIGHT RESEARCH CENTER
EDWARDS, CA

DRAWING TITLE
MEZZANINE POWER PLAN

PROJECT TITLE
REPAIR BUILDING 4820 FLIGHT LOADS LABORATORY
POWER CONTROL UPGRADE

APPROVALS	DATE
Chief Facilities Engineering & Asset Mgmt. Office	5-21-10
Project Manager	5.13.10
Security Office	5/25/10
Project Requestor	5.17.10
Safety Office	6-1-10
Telecom	5/26/10

DRAWN BY	M. HENNIGH	DATE STRTD	09/17/08
W.O. #	95099	DATE PRNTD	04/26/10
PLOT SCALE		TRADE Sht. No.	E-002
CAD FILE NAME			SHEET No. 11 of 125

NOTES:

1. EXISTING HEAT EXCHANGERS WERE POWERED FROM A 30 AMP CIRCUIT BREAKER LOCATED IN PP1–B6. REPLACE THIS CIRCUIT BREAKER WITH A 125 AMP CIRCUIT BREAKER TO SUPPLY POWER TO NEW HEAT EXCHANGER.

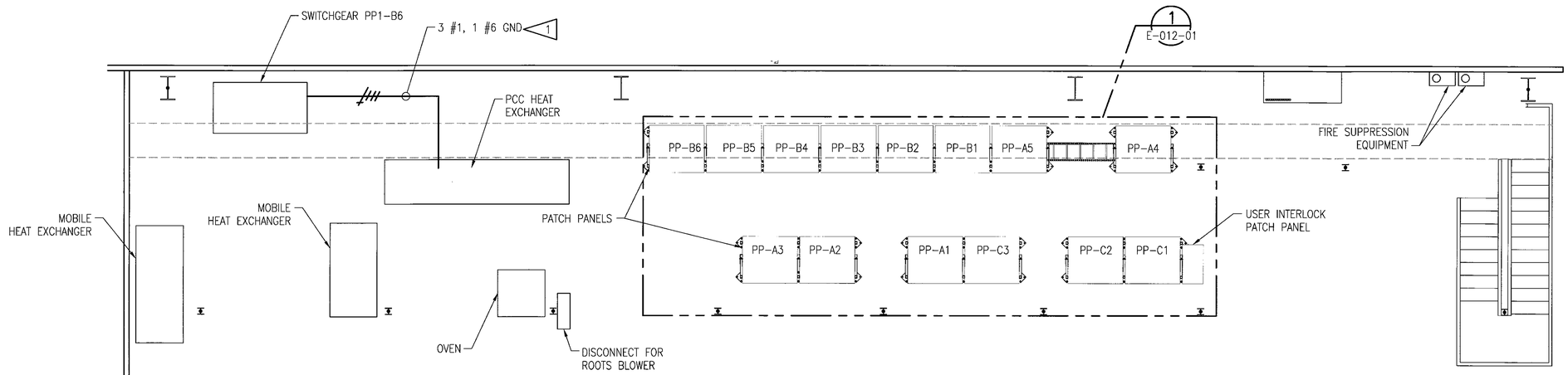

FLOOR POWER PLAN
SCALE: 1/4" = 1'–0"

DEVELOPMENT ONE, INC.
1611 East Fourth Street, Suite 250
Santa Ana, California 92701
J.Bruce Camino, Architect, AIA, NCARB
(714) 689-0298
(714) 648-0197 FAX

BRIAN JEROME GARLAND — REGISTERED ENGINEER — AGRICULTURE — No. 113330 — STATE OF TENNESSEE

DATE	SYM	REVISION	BY	A'PD
10/19/09		100% FINAL DESIGN		

NATIONAL AERONAUTICS AND SPACE ADMINISTRATION
DRYDEN FLIGHT RESEARCH CENTER
EDWARDS, CA

DRAWING TITLE
FLOOR POWER PLAN

PROJECT TITLE
REPAIR BUILDING 4820 FLIGHT LOADS LABORATORY
POWER CONTROL UPGRADE

APPROVALS	DATE
Chief Facilities Engineering & Asset Mgmt. Office	6-2-10
Project Manager	5.13.10
Security Office	5/25/10
Project Requestor	5-17-10
Safety Office	6-1-10
Telecom	5/24/10

DRAWN BY	M. HENNIGH	DATE S'RTD	09/17/08
W.O. #	95099	DATE PRNTD	04/26/10
PLOT SCALE	TRADE SH. No.	E–003	
CAD FILE NAME		SHEET No. 12 of 125	

NOTES:

1. DASHED LINES INDICATE FIELD WIRING.
2. CONTRACTOR SHALL PROVIDE QUOTE FOR OPTION TO REPLACE EXISTING CABLES FROM JUNCTION BOXES, INSIDE THE FLL, TO THE NEW ISOLATION SWITCHES, S1 THROUGH S9.

SEE DRAWINGS #E-030 THRU E-041 FOR CABLE TRAY ELEVATIONS AND DIMENSIONS FOR THIS OPTION.

Mark V. Mellen

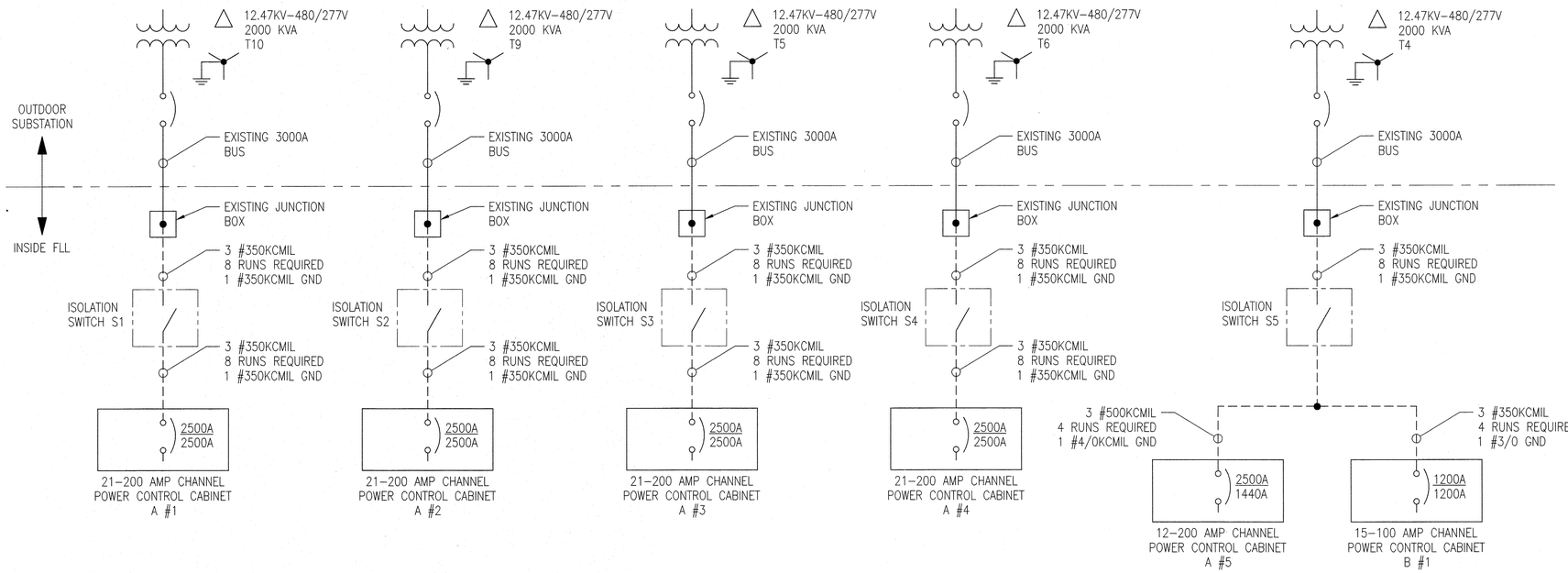

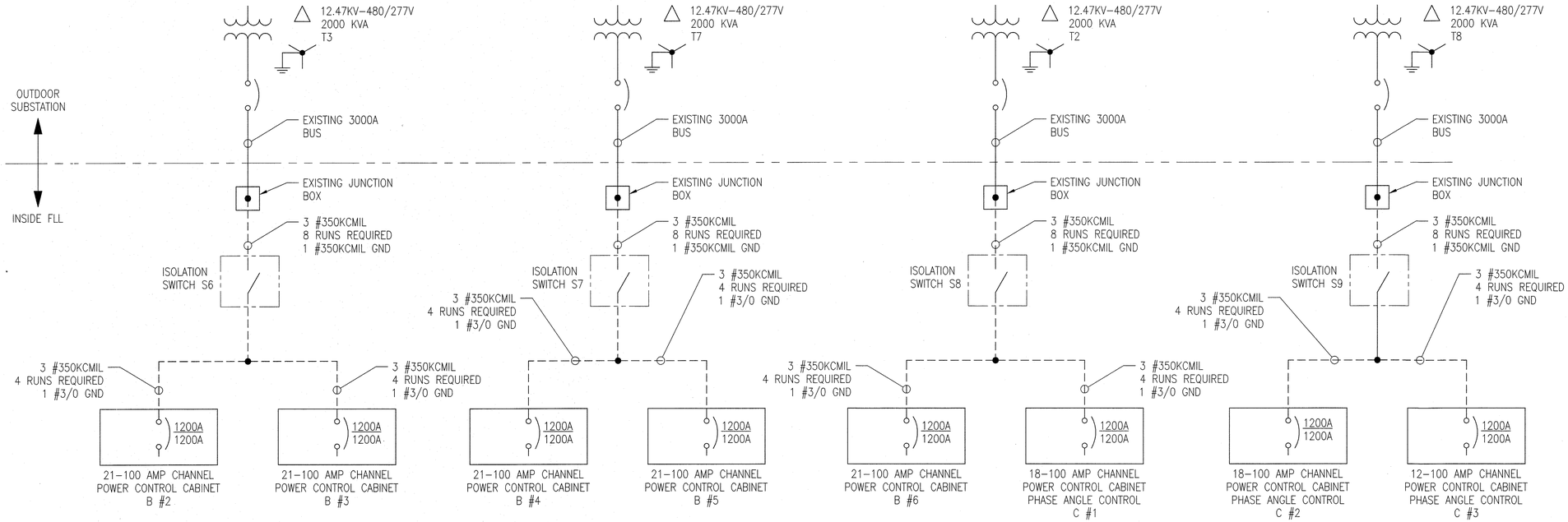

DEVELOPMENT ONE, INC.
1611 East Fourth Street, Suite 250
Santa Ana, California 92701
J.Bruce Camino, Architect, AIA, NCARB
(714) 689-0298
(714) 648-0197 FAX

DATE	SYM	REVISION	BY	A'PD
10/19/09		100% FINAL DESIGN		

NATIONAL AERONAUTICS AND SPACE ADMINISTRATION
DRYDEN FLIGHT RESEARCH CENTER
EDWARDS, CA

DRAWING TITLE
480VAC POWER SYSTEM
ONE–LINE DIAGRAM

PROJECT TITLE
REPAIR BUILDING 4820 FLIGHT LOADS LABORATORY
POWER CONTROL UPGRADE

APPROVALS	DATE
Chief, Facilities Engineering & Asset Mgmt. Office	6-17-10
Project Manager	6-17-10
Safety Officer	6/17/10
Project Inspector	6-17-10
Telecom	6/17/10

DRAWN BY	M. HENNIGH	DATE STRTD	09/17/08
W.O. #	95099	DATE PRNTD	04/26/10
PLOT SCALE		TRADE SH. No.	E–004
CAD FILE NAME			SHEET No. 13 of 125

NOTES:

1. PCC TYPE-A CABINETS 1-4 CONTAIN 21 CHANNELS. PCC A5 CONTAINS 12 CHANNELS.
2. ROUTE 1 #4 GND CONDUCTOR FROM EACH PCC TO THE PATCH PANEL.
3. DESIGNATOR X IN THIS WIRE TAG REPRESENTS CABINET NUMBERS 1-5. SEE DRAWINGS E-006-01 AND E-006-02 FOR CABLE SCHEDULES.
4. DASHED LINES INDICATE FIELD WIRING.
5. DESIGNATOR "X" IN WIRE TAG REPRESENTS CABINET NUMBERS 1-5. DESIGNATOR "YY" IN WIRE TAG AND DEVICE TAG REPRESENTS LAST CHANNEL NUMBER. SEE DRAWINGS E-006-01 AND E-006-02 FOR CABLE SCHEDULES.
6. WIRING FROM PATCH PANELS TO HEATERS PROVIDED BY OWNER.
7. SOME PCC'S HAVE BEEN OMITTED FOR CLARITY. PCC SEQUENCE IS TYPICAL AS SHOWN.

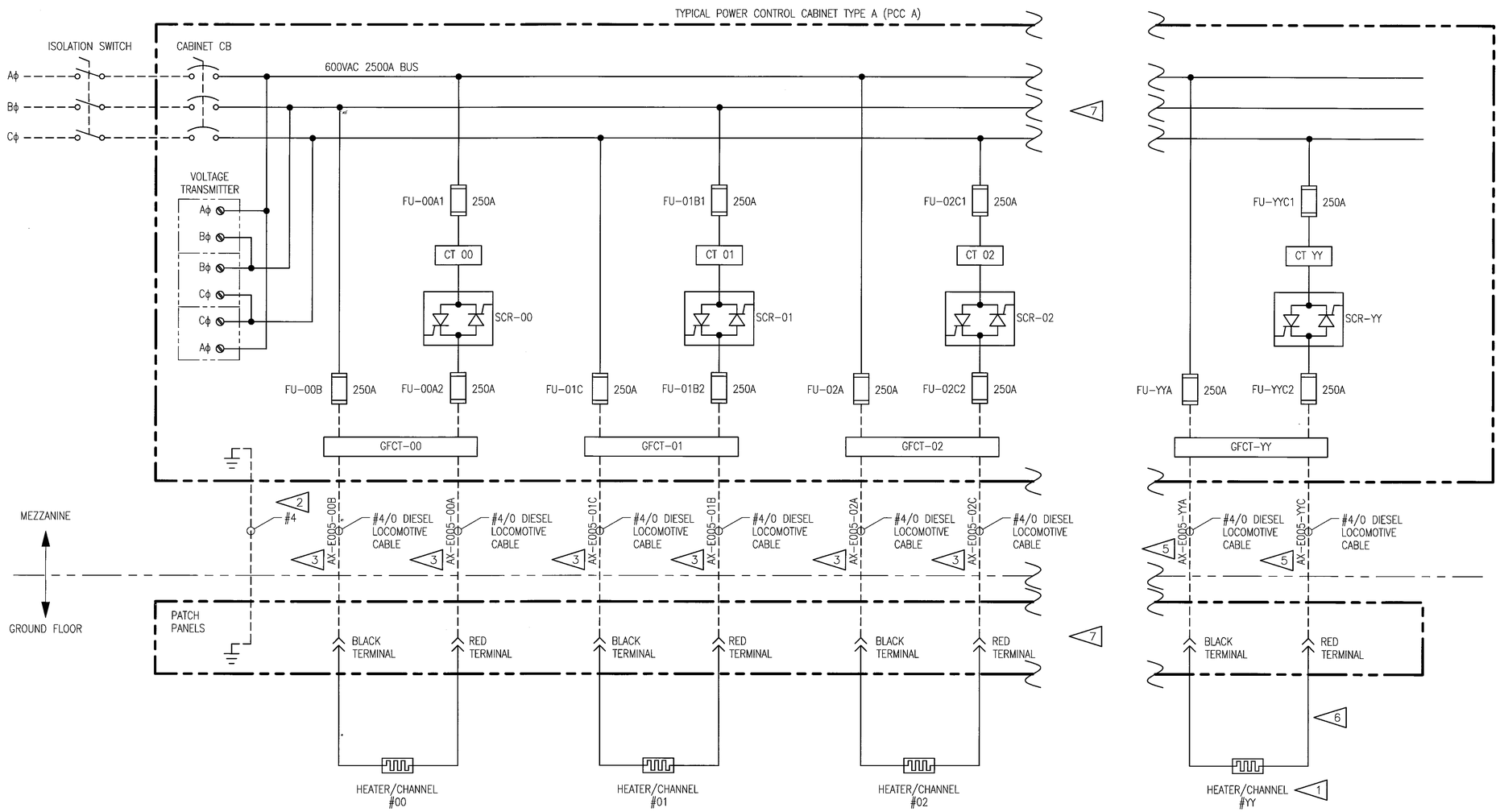

BRIAN JEROME GARLAND
REGISTERED ENGINEER
AGRICULTURE
CIVIL
COMMERCE
No. 113330
STATE OF TENNESSEE

DEVELOPMENT ONE, INC.
1611 East Fourth Street, Suite 250
Santa Ana, California 92701
J.Bruce Camino, Architect, AIA, NCARB
(714) 689-0298
(714) 648-0197 FAX

DATE	SYM	REVISION	BY	A'PD
10/19/09		100% FINAL DESIGN		

NATIONAL AERONAUTICS AND SPACE ADMINISTRATION
DRYDEN FLIGHT RESEARCH CENTER
EDWARDS, CA

DRAWING TITLE
480VAC POWER SYSTEM
PCC TYPE-A TYPICAL
3-LINE DIAGRAM

PROJECT TITLE
REPAIR BUILDING 4820 FLIGHT LOADS LABORATORY
POWER CONTROL UPGRADE

APPROVALS	DATE
Chief Facilities Engineering & Asset Mgmt. Office	6-2-10
Project Manager	5.13.10
Security Office	5/25/10
Project Requestor	5-17-10
Safety Office	6-1-10
Telecom	5/26/10

DRAWN BY	M. HENNIGH	DATE STRTD	09/17/08
W.O. #	95099	DATE PRNTD	04/26/10
PLOT SCALE		TRADE SH. No.	E-005
CAD FILE NAME			

SHEET No. 14 of 125

POWER CONTROL CABINET A1		PATCH PANEL A1
FU-00A2	A1-E005-00A	CH. 00 RED
FU-00B	A1-E005-00B	CH. 00 BLK
FU-01B2	A1-E005-01B	CH. 01 RED
FU-01C	A1-E005-01C	CH. 01 BLK
FU-02C2	A1-E005-02C	CH. 02 RED
FU-02A	A1-E005-02A	CH. 02 BLK
FU-03A2	A1-E005-03A	CH. 03 RED
FU-03B	A1-E005-03B	CH. 03 BLK
FU-04B2	A1-E005-04B	CH. 04 RED
FU-04C	A1-E005-04C	CH. 04 BLK
FU-05C2	A1-E005-05C	CH. 05 RED
FU-05A	A1-E005-05A	CH. 05 BLK
FU-06A2	A1-E005-06A	CH. 06 RED
FU-06B	A1-E005-06B	CH. 06 BLK
FU-07B2	A1-E005-07B	CH. 07 RED
FU-07C	A1-E005-07C	CH. 07 BLK
FU-08C2	A1-E005-08C	CH. 08 RED
FU-08A	A1-E005-08A	CH. 08 BLK
FU-09A2	A1-E005-09A	CH. 09 RED
FU-09B	A1-E005-09B	CH. 09 BLK
FU-10B2	A1-E005-10B	CH. 10 RED
FU-10C	A1-E005-10C	CH. 10 BLK
FU-11C2	A1-E005-11C	CH. 11 RED
FU-11A	A1-E005-11A	CH. 11 BLK
FU-12A2	A1-E005-12A	CH. 12 RED
FU-12B	A1-E005-12B	CH. 12 BLK
FU-13B2	A1-E005-13B	CH. 13 RED
FU-13C	A1-E005-13C	CH. 13 BLK
FU-14C2	A1-E005-14C	CH. 14 RED
FU-14A	A1-E005-14A	CH. 14 BLK
FU-15A2	A1-E005-15A	CH. 15 RED
FU-15B	A1-E005-15B	CH. 15 BLK
FU-16B2	A1-E005-16B	CH. 16 RED
FU-16C	A1-E005-16C	CH. 16 BLK
FU-17C2	A1-E005-17C	CH. 17 RED
FU-17A	A1-E005-17A	CH. 17 BLK
FU-18A2	A1-E005-18A	CH. 18 RED
FU-18B	A1-E005-18B	CH. 18 BLK
FU-19B2	A1-E005-19B	CH. 19 RED
FU-19C	A1-E005-19C	CH. 19 BLK
FU-20C2	A1-E005-20C	CH. 20 RED
FU-20A	A1-E005-20A	CH. 20 BLK

POWER CONTROL CABINET A2		PATCH PANEL A2
FU-00A2	A2-E005-00A	CH. 00 RED
FU-00B	A2-E005-00B	CH. 00 BLK
FU-01B2	A2-E005-01B	CH. 01 RED
FU-01C	A2-E005-01C	CH. 01 BLK
FU-02C2	A2-E005-02C	CH. 02 RED
FU-02A	A2-E005-02A	CH. 02 BLK
FU-03A2	A2-E005-03A	CH. 03 RED
FU-03B	A2-E005-03B	CH. 03 BLK
FU-04B2	A2-E005-04B	CH. 04 RED
FU-04C	A2-E005-04C	CH. 04 BLK
FU-05C2	A2-E005-05C	CH. 05 RED
FU-05A	A2-E005-05A	CH. 05 BLK
FU-06A2	A2-E005-06A	CH. 06 RED
FU-06B	A2-E005-06B	CH. 06 BLK
FU-07B2	A2-E005-07B	CH. 07 RED
FU-07C	A2-E005-07C	CH. 07 BLK
FU-08C2	A2-E005-08C	CH. 08 RED
FU-08A	A2-E005-08A	CH. 08 BLK
FU-09A2	A2-E005-09A	CH. 09 RED
FU-09B	A2-E005-09B	CH. 09 BLK
FU-10B2	A2-E005-10B	CH. 10 RED
FU-10C	A2-E005-10C	CH. 10 BLK
FU-11C2	A2-E005-11C	CH. 11 RED
FU-11A	A2-E005-11A	CH. 11 BLK
FU-12A2	A2-E005-12A	CH. 12 RED
FU-12B	A2-E005-12B	CH. 12 BLK
FU-13B2	A2-E005-13B	CH. 13 RED
FU-13C	A2-E005-13C	CH. 13 BLK
FU-14C2	A2-E005-14C	CH. 14 RED
FU-14A	A2-E005-14A	CH. 14 BLK
FU-15A2	A2-E005-15A	CH. 15 RED
FU-15B	A2-E005-15B	CH. 15 BLK
FU-16B2	A2-E005-16B	CH. 16 RED
FU-16C	A2-E005-16C	CH. 16 BLK
FU-17C2	A2-E005-17C	CH. 17 RED
FU-17A	A2-E005-17A	CH. 17 BLK
FU-18A2	A2-E005-18A	CH. 18 RED
FU-18B	A2-E005-18B	CH. 18 BLK
FU-19B2	A2-E005-19B	CH. 19 RED
FU-19C	A2-E005-19C	CH. 19 BLK
FU-20C2	A2-E005-20C	CH. 20 RED
FU-20A	A2-E005-20A	CH. 20 BLK

POWER CONTROL CABINET A3		PATCH PANEL A3
FU-00A2	A3-E005-00A	CH. 00 RED
FU-00B	A3-E005-00B	CH. 00 BLK
FU-01B2	A3-E005-01B	CH. 01 RED
FU-01C	A3-E005-01C	CH. 01 BLK
FU-02C2	A3-E005-02C	CH. 02 RED
FU-02A	A3-E005-02A	CH. 02 BLK
FU-03A2	A3-E005-03A	CH. 03 RED
FU-03B	A3-E005-03B	CH. 03 BLK
FU-04B2	A3-E005-04B	CH. 04 RED
FU-04C	A3-E005-04C	CH. 04 BLK
FU-05C2	A3-E005-05C	CH. 05 RED
FU-05A	A3-E005-05A	CH. 05 BLK
FU-06A2	A3-E005-06A	CH. 06 RED
FU-06B	A3-E005-06B	CH. 06 BLK
FU-07B2	A3-E005-07B	CH. 07 RED
FU-07C	A3-E005-07C	CH. 07 BLK
FU-08C2	A3-E005-08C	CH. 08 RED
FU-08A	A3-E005-08A	CH. 08 BLK
FU-09A2	A3-E005-09A	CH. 09 RED
FU-09B	A3-E005-09B	CH. 09 BLK
FU-10B2	A3-E005-10B	CH. 10 RED
FU-10C	A3-E005-10C	CH. 10 BLK
FU-11C2	A3-E005-11C	CH. 11 RED
FU-11A	A3-E005-11A	CH. 11 BLK
FU-12A2	A3-E005-12A	CH. 12 RED
FU-12B	A3-E005-12B	CH. 12 BLK
FU-13B2	A3-E005-13B	CH. 13 RED
FU-13C	A3-E005-13C	CH. 13 BLK
FU-14C2	A3-E005-14C	CH. 14 RED
FU-14A	A3-E005-14A	CH. 14 BLK
FU-15A2	A3-E005-15A	CH. 15 RED
FU-15B	A3-E005-15B	CH. 15 BLK
FU-16B2	A3-E005-16B	CH. 16 RED
FU-16C	A3-E005-16C	CH. 16 BLK
FU-17C2	A3-E005-17C	CH. 17 RED
FU-17A	A3-E005-17A	CH. 17 BLK
FU-18A2	A3-E005-18A	CH. 18 RED
FU-18B	A3-E005-18B	CH. 18 BLK
FU-19B2	A3-E005-19B	CH. 19 RED
FU-19C	A3-E005-19C	CH. 19 BLK
FU-20C2	A3-E005-20C	CH. 20 RED
FU-20A	A3-E005-20A	CH. 20 BLK

NOTE:

1. DASHED LINES INDICATE FIELD WIRING.

BRIAN JEROME GARLAND
REGISTERED ENGINEER
DEPARTMENT OF AGRICULTURE
No. 113320
STATE OF TENNESSEE

DEVELOPMENT ONE, INC.
1611 East Fourth Street, Suite 250
Santa Ana, California 92701
J.Bruce Camino, Architect, AIA, NCARB
(714) 689-0298
(714) 648-0197 FAX

DATE	SYM	REVISION	BY	A'PD
10/19/09		100% FINAL DESIGN		

NATIONAL AERONAUTICS AND SPACE ADMINISTRATION
DRYDEN FLIGHT RESEARCH CENTER
EDWARDS, CA

DRAWING TITLE
480VAC POWER SYSTEM
PCC TYPE-A
CABLE SCHEDULE (SHEET 1)

PROJECT TITLE
REPAIR BUILDING 4820 FLIGHT LOADS LABORATORY
POWER CONTROL UPGRADE

APPROVALS	DATE
Chief Facilities Engineering & Asset Mgmt. Office	6-2-10
Project Manager	5.13.10
Security Office	5/25/10
Project Requestor	5.17.10
Safety Office	6-7-10
Telecom	5/26/10

DRAWN BY	M. HENNIGH	DATE STRTD	09/17/08
W.O. #	95099	DATE PRNTD	04/26/10
PLOT SCALE		TRADE SH. No.	E-006-01
CAD FILE NAME			

SHEET No. 15 of 125

POWER CONTROL CABINET A4		PATCH PANEL A4
FU-00A2	A4-E005-00A	CH. 00 RED
FU-00B	A4-E005-00B	CH. 00 BLK
FU-01B2	A4-E005-01B	CH. 01 RED
FU-01C	A4-E005-01C	CH. 01 BLK
FU-02C2	A4-E005-02C	CH. 02 RED
FU-02A	A4-E005-02A	CH. 02 BLK
FU-03A2	A4-E005-03A	CH. 03 RED
FU-03B	A4-E005-03B	CH. 03 BLK
FU-04B2	A4-E005-04B	CH. 04 RED
FU-04C	A4-E005-04C	CH. 04 BLK
FU-05C2	A4-E005-05C	CH. 05 RED
FU-05A	A4-E005-05A	CH. 05 BLK
FU-06A2	A4-E005-06A	CH. 06 RED
FU-06B	A4-E005-06B	CH. 06 BLK
FU-07B2	A4-E005-07B	CH. 07 RED
FU-07C	A4-E005-07C	CH. 07 BLK
FU-08C2	A4-E005-08C	CH. 08 RED
FU-08A	A4-E005-08A	CH. 08 BLK
FU-09A2	A4-E005-09A	CH. 09 RED
FU-09B	A4-E005-09B	CH. 09 BLK
FU-10B2	A4-E005-10B	CH. 10 RED
FU-10C	A4-E005-10C	CH. 10 BLK
FU-11C2	A4-E005-11C	CH. 11 RED
FU-11A	A4-E005-11A	CH. 11 BLK
FU-12A2	A4-E005-12A	CH. 12 RED
FU-12B	A4-E005-12B	CH. 12 BLK
FU-13B2	A4-E005-13B	CH. 13 RED
FU-13C	A4-E005-13C	CH. 13 BLK
FU-14C2	A4-E005-14C	CH. 14 RED
FU-14A	A4-E005-14A	CH. 14 BLK
FU-15A2	A4-E005-15A	CH. 15 RED
FU-15B	A4-E005-15B	CH. 15 BLK
FU-16B2	A4-E005-16B	CH. 16 RED
FU-16C	A4-E005-16C	CH. 16 BLK
FU-17C2	A4-E005-17C	CH. 17 RED
FU-17A	A4-E005-17A	CH. 17 BLK
FU-18A2	A4-E005-18A	CH. 18 RED
FU-18B	A4-E005-18B	CH. 18 BLK
FU-19B2	A4-E005-19B	CH. 19 RED
FU-19C	A4-E005-19C	CH. 19 BLK
FU-20C2	A4-E005-20C	CH. 20 RED
FU-20A	A4-E005-20A	CH. 20 BLK

POWER CONTROL CABINET A5		PATCH PANEL A5
FU-00A2	A5-E005-00A	CH. 00 RED
FU-00B	A5-E005-00B	CH. 00 BLK
FU-01B2	A5-E005-01B	CH. 01 RED
FU-01C	A5-E005-01C	CH. 01 BLK
FU-02C2	A5-E005-02C	CH. 02 RED
FU-02A	A5-E005-02A	CH. 02 BLK
FU-03A2	A5-E005-03A	CH. 03 RED
FU-03B	A5-E005-03B	CH. 03 BLK
FU-04B2	A5-E005-04B	CH. 04 RED
FU-04C	A5-E005-04C	CH. 04 BLK
FU-05C2	A5-E005-05C	CH. 05 RED
FU-05A	A5-E005-05A	CH. 05 BLK
FU-06A2	A5-E005-06A	CH. 06 RED
FU-06B	A5-E005-06B	CH. 06 BLK
FU-07B2	A5-E005-07B	CH. 07 RED
FU-07C	A5-E005-07C	CH. 07 BLK
FU-08C2	A5-E005-08C	CH. 08 RED
FU-08A	A5-E005-08A	CH. 08 BLK
FU-09A2	A5-E005-09A	CH. 09 RED
FU-09B	A5-E005-09B	CH. 09 BLK
FU-10B2	A5-E005-10B	CH. 10 RED
FU-10C	A5-E005-10C	CH. 10 BLK
FU-11C2	A5-E005-11C	CH. 11 RED
FU-11A	A5-E005-11A	CH. 11 BLK

NOTE:

1. DASHED LINES INDICATE FIELD WIRING.

BRIAN JEROME GARLAND
REGISTERED ENGINEER
AGRICULTURE
COMMERCE
No. 113301
STATE OF TENNESSEE

DEVELOPMENT ONE, INC.
1611 East Fourth Street, Suite 250
Santa Ana, California 92701
J.Bruce Camino, Architect, AIA, NCARB
(714) 689-0298
(714) 648-0197 FAX

DATE	SYM	REVISION	BY	A'PD
10/19/09		100% FINAL DESIGN		

NATIONAL AERONAUTICS AND SPACE ADMINISTRATION
DRYDEN FLIGHT RESEARCH CENTER
EDWARDS, CA

DRAWING TITLE
480VAC POWER SYSTEM
PCC TYPE-A
CABLE SCHEDULE (SHEET 2)

PROJECT TITLE
REPAIR BUILDING 4820 FLIGHT LOADS LABORATORY
POWER CONTROL UPGRADE

APPROVALS	DATE
Chief, Facilities Engineering & Asset Mgmt. Office	6-2-10
Project Manager	5.13.10
Security Office	5/25/10
Project Requestor	5-17-10
Safety Office	6-4-10
Telecom	5/26/10

DRAWN BY	M. HENNIGH	DATE STRTD	09/17/08
W.O. #	95099	DATE PRNTD	04/26/10
PLOT SCALE		TRADE SK. No.	E-006-02
CAD FILE NAME		SHEET No.	16 of 125

NOTES:

1. PCC TYPE-B CABINETS 2-6 CONTAIN 21 CHANNELS. PCC B1 CONTAINS 12 CHANNELS.
2. ROUTE 1 #6 GND CONDUCTOR FROM EACH PCC TO THE PATCH PANEL.
3. DESIGNATOR X IN THIS WIRE TAG REPRESENTS CABINET NUMBERS 1-6. SEE DRAWINGS E-008-01 AND E-008-02 FOR CABLE SCHEDULES.
4. DASHED LINES INDICATE FIELD WIRING.
5. DESIGNATOR "X" IN WIRE TAG REPRESENTS CABINET NUMBERS 1-6. DESIGNATOR "YY" IN WIRE TAG AND DEVICE TAG REPRESENTS LAST CHANNEL NUMBER. SEE DRAWINGS E-008-01 AND E-008-02 FOR CABLE SCHEDULES.
6. WIRING FROM PATCH PANELS TO HEATERS PROVIDED BY OWNER.
7. SOME PCC'S HAVE BEEN OMITTED FOR CLARITY. PCC SEQUENCE IS TYPICAL AS SHOWN.

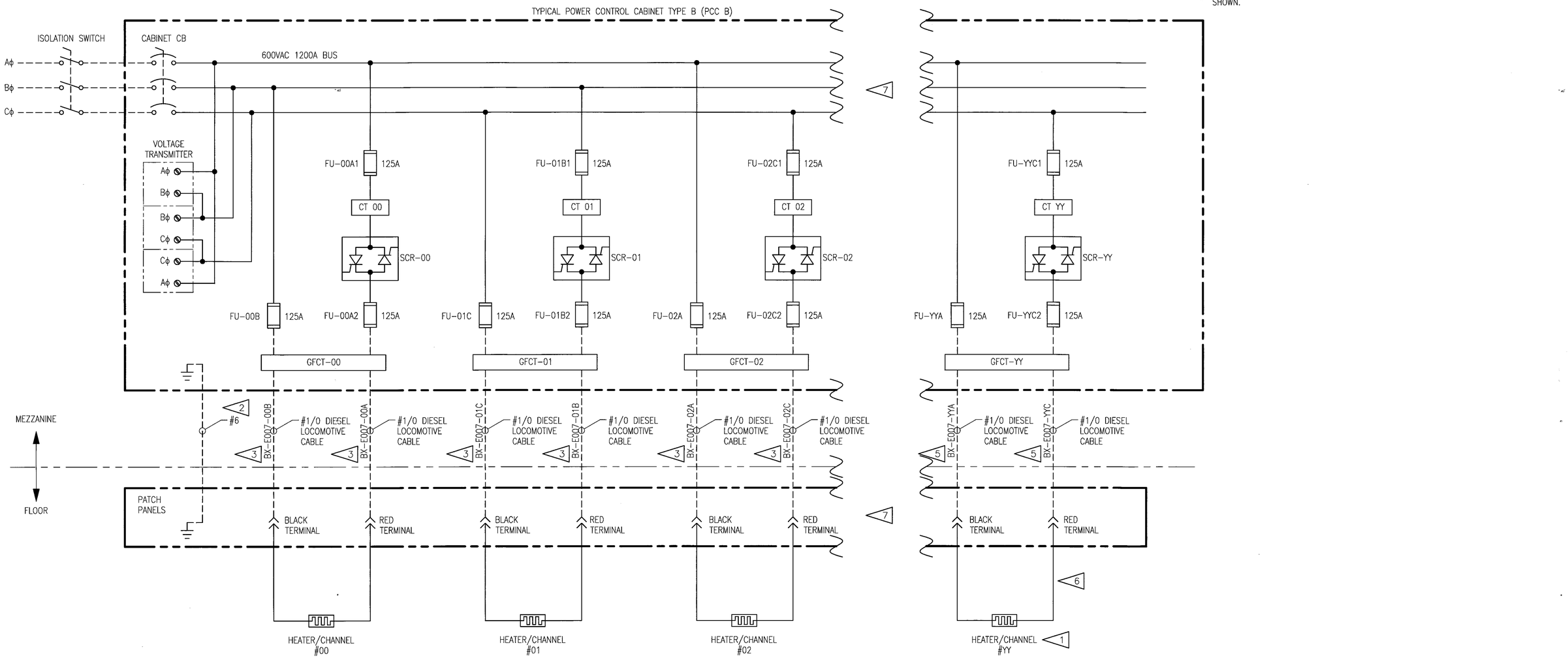

BRIAN JEROME GALLAND
REGISTERED ENGINEER
AGRICULTURE
No. 113330
STATE OF TENNESSEE

DEVELOPMENT ONE, INC.
1611 East Fourth Street, Suite 250
Santa Ana, California 92701
J.Bruce Camino, Architect, AIA, NCARB
(714) 689-0298
(714) 648-0197 FAX

DATE	SYM	REVISION	BY	A'PD
10/19/09		100% FINAL DESIGN		

NATIONAL AERONAUTICS AND SPACE ADMINISTRATION
DRYDEN FLIGHT RESEARCH CENTER
EDWARDS, CA

DRAWING TITLE
480VAC POWER SYSTEM
PCC TYPE-B TYPICAL
3-LINE DIAGRAM

PROJECT TITLE
REPAIR BUILDING 4820 FLIGHT LOADS LABORATORY
POWER CONTROL UPGRADE

APPROVALS	DATE
Chief, Facilities Engineering & Asset Mgmt. Office	6.2.10
Project Manager	5.13.10
Security Office	5/25/10
Project Requestor	5-17-10
Other	6-1-10
Telecom	5/24/10

DRAWN BY	M. HENNIGH	DATE STRTD	09/17/08
W.O. #	95099	DATE PRNTD	04/26/10
PLOT SCALE		TRADE SH. No.	E-007
CAD FILE NAME			

SHEET No. 17 of 125

POWER CONTROL CABINET B1		PATCH PANEL B1
FU-00A2	B1-E007-00A	CH. 00 ORG
FU-00B	B1-E007-00B	CH. 00 BLU
FU-01B2	B1-E007-01B	CH. 01 ORG
FU-01C	B1-E007-01C	CH. 01 BLU
FU-02C2	B1-E007-02C	CH. 02 ORG
FU-02A	B1-E007-02A	CH. 02 BLU
FU-03A2	B1-E007-03A	CH. 03 ORG
FU-03B	B1-E007-03B	CH. 03 BLU
FU-04B2	B1-E007-04B	CH. 04 ORG
FU-04C	B1-E007-04C	CH. 04 BLU
FU-05C2	B1-E007-05C	CH. 05 ORG
FU-05A	B1-E007-05A	CH. 05 BLU
FU-06A2	B1-E007-06A	CH. 06 ORG
FU-06B	B1-E007-06B	CH. 06 BLU
FU-07B2	B1-E007-07B	CH. 07 ORG
FU-07C	B1-E007-07C	CH. 07 BLU
FU-08C2	B1-E007-08C	CH. 08 ORG
FU-08A	B1-E007-08A	CH. 08 BLU
FU-09A2	B1-E007-09A	CH. 09 ORG
FU-09B	B1-E007-09B	CH. 09 BLU
FU-10B2	B1-E007-10B	CH. 10 ORG
FU-10C	B1-E007-10C	CH. 10 BLU
FU-11C2	B1-E007-11C	CH. 11 ORG
FU-11A	B1-E007-11A	CH. 11 BLU
FU-12A2	B1-E007-12A	CH. 12 ORG
FU-12B	B1-E007-12B	CH. 12 BLU
FU-13B2	B1-E007-13B	CH. 13 ORG
FU-13C	B1-E007-13C	CH. 13 BLU
FU-14C2	B1-E007-14C	CH. 14 ORG
FU-14A	B1-E007-14A	CH. 14 BLU

POWER CONTROL CABINET B2		PATCH PANEL B2
FU-00A2	B2-E007-00A	CH. 00 ORG
FU-00B	B2-E007-00B	CH. 00 BLU
FU-01B2	B2-E007-01B	CH. 01 ORG
FU-01C	B2-E007-01C	CH. 01 BLU
FU-02C2	B2-E007-02C	CH. 02 ORG
FU-02A	B2-E007-02A	CH. 02 BLU
FU-03A2	B2-E007-03A	CH. 03 ORG
FU-03B	B2-E007-03B	CH. 03 BLU
FU-04B2	B2-E007-04B	CH. 04 ORG
FU-04C	B2-E007-04C	CH. 04 BLU
FU-05C2	B2-E007-05C	CH. 05 ORG
FU-05A	B2-E007-05A	CH. 05 BLU
FU-06A2	B2-E007-06A	CH. 06 ORG
FU-06B	B2-E007-06B	CH. 06 BLU
FU-07B2	B2-E007-07B	CH. 07 ORG
FU-07C	B2-E007-07C	CH. 07 BLU
FU-08C2	B2-E007-08C	CH. 08 ORG
FU-08A	B2-E007-08A	CH. 08 BLU
FU-09A2	B2-E007-09A	CH. 09 ORG
FU-09B	B2-E007-09B	CH. 09 BLU
FU-10B2	B2-E007-10B	CH. 10 ORG
FU-10C	B2-E007-10C	CH. 10 BLU
FU-11C2	B2-E007-11C	CH. 11 ORG
FU-11A	B2-E007-11A	CH. 11 BLU
FU-12A2	B2-E007-12A	CH. 12 ORG
FU-12B	B2-E007-12B	CH. 12 BLU
FU-13B2	B2-E007-13B	CH. 13 ORG
FU-13C	B2-E007-13C	CH. 13 BLU
FU-14C2	B2-E007-14C	CH. 14 ORG
FU-14A	B2-E007-14A	CH. 14 BLU
FU-15A2	B2-E007-15A	CH. 15 ORG
FU-15B	B2-E007-15B	CH. 15 BLU
FU-16B2	B2-E007-16B	CH. 16 ORG
FU-16C	B2-E007-16C	CH. 16 BLU
FU-17C2	B2-E007-17C	CH. 17 ORG
FU-17A	B2-E007-17A	CH. 17 BLU
FU-18A2	B2-E007-18A	CH. 18 ORG
FU-18B	B2-E007-18B	CH. 18 BLU
FU-19B2	B2-E007-19B	CH. 19 ORG
FU-19C	B2-E007-19C	CH. 19 BLU
FU-20C2	B2-E007-20C	CH. 20 ORG
FU-20A	B2-E007-20A	CH. 20 BLU

POWER CONTROL CABINET B3		PATCH PANEL B3
FU-00A2	B3-E007-00A	CH. 00 ORG
FU-00B	B3-E007-00B	CH. 00 BLU
FU-01B2	B3-E007-01B	CH. 01 ORG
FU-01C	B3-E007-01C	CH. 01 BLU
FU-02C2	B3-E007-02C	CH. 02 ORG
FU-02A	B3-E007-02A	CH. 02 BLU
FU-03A2	B3-E007-03A	CH. 03 ORG
FU-03B	B3-E007-03B	CH. 03 BLU
FU-04B2	B3-E007-04B	CH. 04 ORG
FU-04C	B3-E007-04C	CH. 04 BLU
FU-05C2	B3-E007-05C	CH. 05 ORG
FU-05A	B3-E007-05A	CH. 05 BLU
FU-06A2	B3-E007-06A	CH. 06 ORG
FU-06B	B3-E007-06B	CH. 06 BLU
FU-07B2	B3-E007-07B	CH. 07 ORG
FU-07C	B3-E007-07C	CH. 07 BLU
FU-08C2	B3-E007-08C	CH. 08 ORG
FU-08A	B3-E007-08A	CH. 08 BLU
FU-09A2	B3-E007-09A	CH. 09 ORG
FU-09B	B3-E007-09B	CH. 09 BLU
FU-10B2	B3-E007-10B	CH. 10 ORG
FU-10C	B3-E007-10C	CH. 10 BLU
FU-11C2	B3-E007-11C	CH. 11 ORG
FU-11A	B3-E007-11A	CH. 11 BLU
FU-12A2	B3-E007-12A	CH. 12 ORG
FU-12B	B3-E007-12B	CH. 12 BLU
FU-13B2	B3-E007-13B	CH. 13 ORG
FU-13C	B3-E007-13C	CH. 13 BLU
FU-14C2	B3-E007-14C	CH. 14 ORG
FU-14A	B3-E007-14A	CH. 14 BLU
FU-15A2	B3-E007-15A	CH. 15 ORG
FU-15B	B3-E007-15B	CH. 15 BLU
FU-16B2	B3-E007-16B	CH. 16 ORG
FU-16C	B3-E007-16C	CH. 16 BLU
FU-17C2	B3-E007-17C	CH. 17 ORG
FU-17A	B3-E007-17A	CH. 17 BLU
FU-18A2	B3-E007-18A	CH. 18 ORG
FU-18B	B3-E007-18B	CH. 18 BLU
FU-19B2	B3-E007-19B	CH. 19 ORG
FU-19C	B3-E007-19C	CH. 19 BLU
FU-20C2	B3-E007-20C	CH. 20 ORG
FU-20A	B3-E007-20A	CH. 20 BLU

NOTE:

1. DASHED LINES INDICATE FIELD WIRING.

BRIAN JEROME GARLAND
REGISTERED ENGINEER
AGRICULTURE
STATE OF TENNESSEE

DEVELOPMENT ONE, INC.
1611 East Fourth Street, Suite 250
Santa Ana, California 92701
J.Bruce Camino, Architect, AIA, NCARB
(714) 689-0298
(714) 648-0197 FAX

DATE	SYM	REVISION	BY	A'PD
10/19/09		100% FINAL DESIGN		

NATIONAL AERONAUTICS AND SPACE ADMINISTRATION
DRYDEN FLIGHT RESEARCH CENTER
EDWARDS, CA

DRAWING TITLE
480VAC POWER SYSTEM
PCC TYPE-B
CABLE SCHEDULE (SHEET 1)

PROJECT TITLE
REPAIR BUILDING 4820 FLIGHT LOADS LABORATORY
POWER CONTROL UPGRADE

APPROVALS	DATE
Chief, Facilities Engineering & Asset Mgmt. Office	6-2-10
Project Manager	5-13-10
Security Office	5/25/10
Project Requestor	5-17-10
Safety Office	6-1-10
Telecom	5/24/10

DRAWN BY	M. HENNICH	DATE STRTD	09/17/08
W.O. #	95099	DATE PRNTD	04/26/10
PLOT SCALE		TRADE SH. No.	E-008-01
CAD FILE NAME			

SHEET No. 18 of 125

POWER CONTROL CABINET B4		PATCH PANEL B4
FU-00A2	B4-E007-00A	CH. 00 ORG
FU-00B	B4-E007-00B	CH. 00 BLU
FU-01B2	B4-E007-01B	CH. 01 ORG
FU-01C	B4-E007-01C	CH. 01 BLU
FU-02C2	B4-E007-02C	CH. 02 ORG
FU-02A	B4-E007-02A	CH. 02 BLU
FU-03A2	B4-E007-03A	CH. 03 ORG
FU-03B	B4-E007-03B	CH. 03 BLU
FU-04B2	B4-E007-04B	CH. 04 ORG
FU-04C	B4-E007-04C	CH. 04 BLU
FU-05C2	B4-E007-05C	CH. 05 ORG
FU-05A	B4-E007-05A	CH. 05 BLU
FU-06A2	B4-E007-06A	CH. 06 ORG
FU-06B	B4-E007-06B	CH. 06 BLU
FU-07B2	B4-E007-07B	CH. 07 ORG
FU-07C	B4-E007-07C	CH. 07 BLU
FU-08C2	B4-E007-08C	CH. 08 ORG
FU-08A	B4-E007-08A	CH. 08 BLU
FU-09A2	B4-E007-09A	CH. 09 ORG
FU-09B	B4-E007-09B	CH. 09 BLU
FU-10B2	B4-E007-10B	CH. 10 ORG
FU-10C	B4-E007-10C	CH. 10 BLU
FU-11C2	B4-E007-11C	CH. 11 ORG
FU-11A	B4-E007-11A	CH. 11 BLU
FU-12A2	B4-E007-12A	CH. 12 ORG
FU-12B	B4-E007-12B	CH. 12 BLU
FU-13B2	B4-E007-13B	CH. 13 ORG
FU-13C	B4-E007-13C	CH. 13 BLU
FU-14C2	B4-E007-14C	CH. 14 ORG
FU-14A	B4-E007-14A	CH. 14 BLU
FU-15A2	B4-E007-15A	CH. 15 ORG
FU-15B	B4-E007-15B	CH. 15 BLU
FU-16B2	B4-E007-16B	CH. 16 ORG
FU-16C	B4-E007-16C	CH. 16 BLU
FU-17C2	B4-E007-17C	CH. 17 ORG
FU-17A	B4-E007-17A	CH. 17 BLU
FU-18A2	B4-E007-18A	CH. 18 ORG
FU-18B	B4-E007-18B	CH. 18 BLU
FU-19B2	B4-E007-19B	CH. 19 ORG
FU-19C	B4-E007-19C	CH. 19 BLU
FU-20C2	B4-E007-20C	CH. 20 ORG
FU-20A	B4-E007-20A	CH. 20 BLU

POWER CONTROL CABINET B5		PATCH PANEL B5
FU-00A2	B5-E007-00A	CH. 00 ORG
FU-00B	B5-E007-00B	CH. 00 BLU
FU-01B2	B5-E007-01B	CH. 01 ORG
FU-01C	B5-E007-01C	CH. 01 BLU
FU-02C2	B5-E007-02C	CH. 02 ORG
FU-02A	B5-E007-02A	CH. 02 BLU
FU-03A2	B5-E007-03A	CH. 03 ORG
FU-03B	B5-E007-03B	CH. 03 BLU
FU-04B2	B5-E007-04B	CH. 04 ORG
FU-04C	B5-E007-04C	CH. 04 BLU
FU-05C2	B5-E007-05C	CH. 05 ORG
FU-05A	B5-E007-05A	CH. 05 BLU
FU-06A2	B5-E007-06A	CH. 06 ORG
FU-06B	B5-E007-06B	CH. 06 BLU
FU-07B2	B5-E007-07B	CH. 07 ORG
FU-07C	B5-E007-07C	CH. 07 BLU
FU-08C2	B5-E007-08C	CH. 08 ORG
FU-08A	B5-E007-08A	CH. 08 BLU
FU-09A2	B5-E007-09A	CH. 09 ORG
FU-09B	B5-E007-09B	CH. 09 BLU
FU-10B2	B5-E007-10B	CH. 10 ORG
FU-10C	B5-E007-10C	CH. 10 BLU
FU-11C2	B5-E007-11C	CH. 11 ORG
FU-11A	B5-E007-11A	CH. 11 BLU
FU-12A2	B5-E007-12A	CH. 12 ORG
FU-12B	B5-E007-12B	CH. 12 BLU
FU-13B2	B5-E007-13B	CH. 13 ORG
FU-13C	B5-E007-13C	CH. 13 BLU
FU-14C2	B5-E007-14C	CH. 14 ORG
FU-14A	B5-E007-14A	CH. 14 BLU
FU-15A2	B5-E007-15A	CH. 15 ORG
FU-15B	B5-E007-15B	CH. 15 BLU
FU-16B2	B5-E007-16B	CH. 16 ORG
FU-16C	B5-E007-16C	CH. 16 BLU
FU-17C2	B5-E007-17C	CH. 17 ORG
FU-17A	B5-E007-17A	CH. 17 BLU
FU-18A2	B5-E007-18A	CH. 18 ORG
FU-18B	B5-E007-18B	CH. 18 BLU
FU-19B2	B5-E007-19B	CH. 19 ORG
FU-19C	B5-E007-19C	CH. 19 BLU
FU-20C2	B5-E007-20C	CH. 20 ORG
FU-20A	B5-E007-20A	CH. 20 BLU

POWER CONTROL CABINET B6		PATCH PANEL B6
FU-00A2	B6-E007-00A	CH. 00 ORG
FU-00B	B6-E007-00B	CH. 00 BLU
FU-01B2	B6-E007-01B	CH. 01 ORG
FU-01C	B6-E007-01C	CH. 01 BLU
FU-02C2	B6-E007-02C	CH. 02 ORG
FU-02A	B6-E007-02A	CH. 02 BLU
FU-03A2	B6-E007-03A	CH. 03 ORG
FU-03B	B6-E007-03B	CH. 03 BLU
FU-04B2	B6-E007-04B	CH. 04 ORG
FU-04C	B6-E007-04C	CH. 04 BLU
FU-05C2	B6-E007-05C	CH. 05 ORG
FU-05A	B6-E007-05A	CH. 05 BLU
FU-06A2	B6-E007-06A	CH. 06 ORG
FU-06B	B6-E007-06B	CH. 06 BLU
FU-07B2	B6-E007-07B	CH. 07 ORG
FU-07C	B6-E007-07C	CH. 07 BLU
FU-08C2	B6-E007-08C	CH. 08 ORG
FU-08A	B6-E007-08A	CH. 08 BLU
FU-09A2	B6-E007-09A	CH. 09 ORG
FU-09B	B6-E007-09B	CH. 09 BLU
FU-10B2	B6-E007-10B	CH. 10 ORG
FU-10C	B6-E007-10C	CH. 10 BLU
FU-11C2	B6-E007-11C	CH. 11 ORG
FU-11A	B6-E007-11A	CH. 11 BLU
FU-12A2	B6-E007-12A	CH. 12 ORG
FU-12B	B6-E007-12B	CH. 12 BLU
FU-13B2	B6-E007-13B	CH. 13 ORG
FU-13C	B6-E007-13C	CH. 13 BLU
FU-14C2	B6-E007-14C	CH. 14 ORG
FU-14A	B6-E007-14A	CH. 14 BLU
FU-15A2	B6-E007-15A	CH. 15 ORG
FU-15B	B6-E007-15B	CH. 15 BLU
FU-16B2	B6-E007-16B	CH. 16 ORG
FU-16C	B6-E007-16C	CH. 16 BLU
FU-17C2	B6-E007-17C	CH. 17 ORG
FU-17A	B6-E007-17A	CH. 17 BLU
FU-18A2	B6-E007-18A	CH. 18 ORG
FU-18B	B6-E007-18B	CH. 18 BLU
FU-19B2	B6-E007-19B	CH. 19 ORG
FU-19C	B6-E007-19C	CH. 19 BLU
FU-20C2	B6-E007-20C	CH. 20 ORG
FU-20A	B6-E007-20A	CH. 20 BLU

NOTE:

1. DASHED LINES INDICATE FIELD WIRING.

DEVELOPMENT ONE, INC.
1611 East Fourth Street, Suite 250
Santa Ana, California 92701
J.Bruce Camino, Architect, AIA, NCARB
(714) 689-0298
(714) 648-0197 FAX

DATE	SYM	REVISION	BY	A'PD
10/19/09		100% FINAL DESIGN		

NATIONAL AERONAUTICS AND SPACE ADMINISTRATION
DRYDEN FLIGHT RESEARCH CENTER
EDWARDS, CA

DRAWING TITLE
480VAC POWER SYSTEM
PCC TYPE-B
CABLE SCHEDULE (SHEET 2)

PROJECT TITLE
REPAIR BUILDING 4820 FLIGHT LOADS LABORATORY
POWER CONTROL UPGRADE

APPROVALS	DATE
Chief, Facilities Engineering & Asset Mgmt. Office	6-2-10
Project Manager	5-13-10
Security Office	5/25/10
Project Requestor	5-27-10
Safety Office	6-7-10
Telecom	5/26/10

DRAWN BY	M. HENNIGH	DATE STRTD	09/17/08
W.O. #	95099	DATE PRNTD	04/26/10
PLOT SCALE		TRADE SH. No.	E-008-02
CAD FILE NAME			

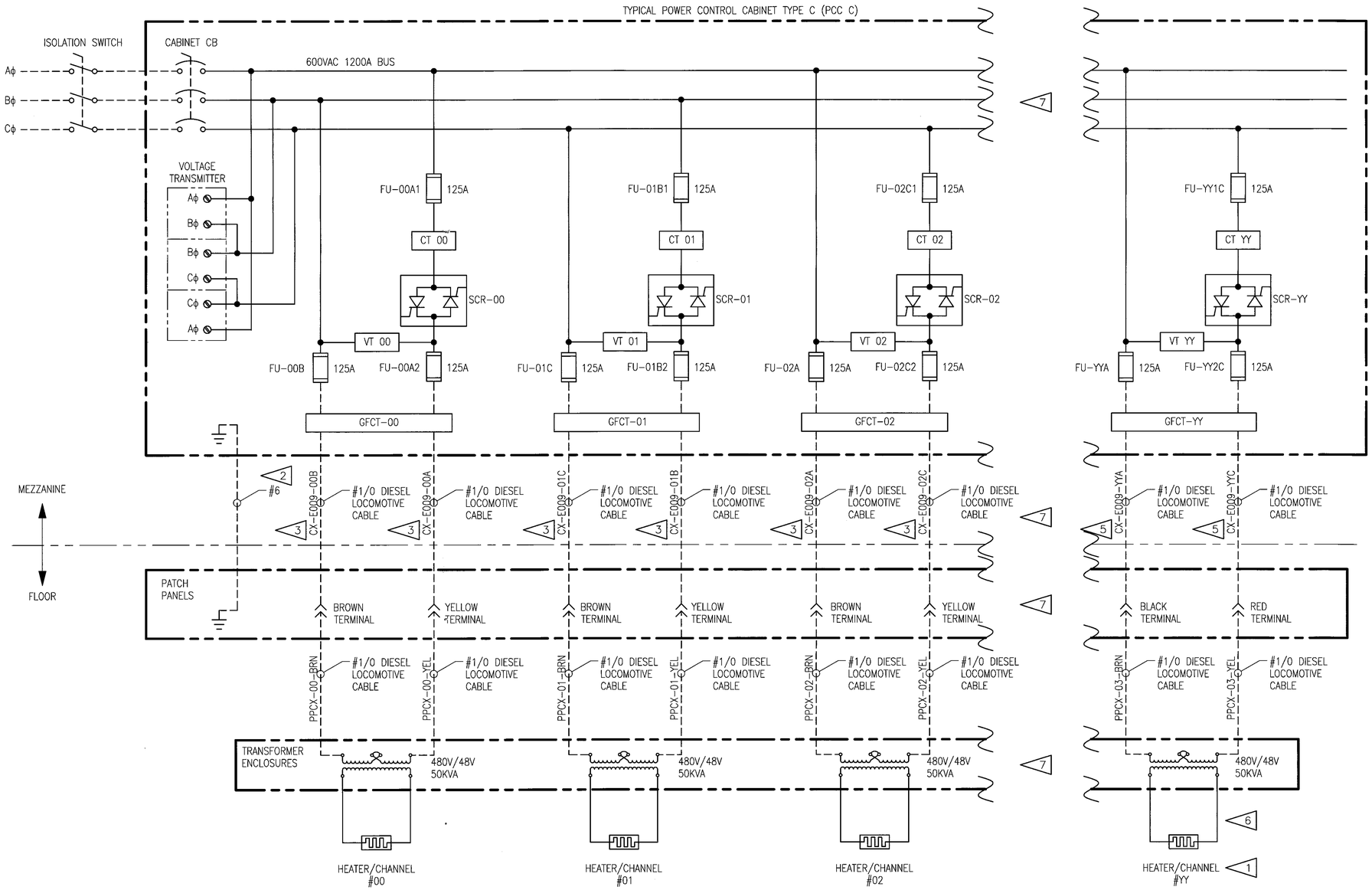

NOTES:

1. PCC TYPE-C CABINETS 1 & 2 CONTAIN 21 CHANNELS. PCC C3 CONTAINS 12 CHANNELS.
2. ROUTE 1 #6 GND CONDUCTOR FROM EACH PCC TO THE PATCH PANEL.
3. DESIGNATOR X IN THIS WIRE TAG REPRESENTS CABINET NUMBERS 1-3. SEE DRAWINGS E-010 FOR CABLE SCHEDULES.
4. DASHED LINES INDICATE FIELD WIRING.
5. DESIGNATOR "X" IN WIRE TAG REPRESENTS CABINET NUMBERS 1-3. DESIGNATOR "YY" IN WIRE TAG AND DEVICE TAG REPRESENTS LAST CHANNEL NUMBER. SEE DRAWING E-010 FOR CABLE SCHEDULES.
6. WIRING FROM PATCH PANELS TO HEATERS PROVIDED BY OWNER.
7. SOME PCC'S HAVE BEEN OMITTED FOR CLARITY. PCC SEQUENCE IS TYPICAL AS SHOWN.

BRIAN JEROME GARLAND — REGISTERED ENGINEER — AGRICULTURE — COMMERCE — No. 113350 — STATE OF TENNESSEE

DEVELOPMENT ONE, INC.
1611 East Fourth Street, Suite 250
Santa Ana, California 92701
J.Bruce Camino, Architect, AIA, NCARB
(714) 689-0298
(714) 648-0197 FAX

DATE	SYM	REVISION	BY	A'PD
10/19/09		100% FINAL DESIGN		

NATIONAL AERONAUTICS AND SPACE ADMINISTRATION
DRYDEN FLIGHT RESEARCH CENTER
EDWARDS, CA

DRAWING TITLE
480VAC POWER SYSTEM
PCC TYPE-C TYPICAL
3-LINE DIAGRAM

PROJECT TITLE
REPAIR BUILDING 4820 FLIGHT LOADS LABORATORY
POWER CONTROL UPGRADE

APPROVALS	DATE
Chief, Facilities Engineering & Asset Mgmt. Office	6-2-10
Project Manager	5.13.10
Security Office	5/25/10
Project Inspector	5-17-10
Safety Office	6-4-10
Telecom	5/24/10

DRAWN BY	M. HENNIGH	DATE STRTD	09/17/08
W.O. #	95099	DATE PRNTD	04/26/10
PLOT SCALE		TRADE SH. No.	E-009
CAD FILE NAME			

SHEET No. 20 of 125

POWER CONTROL CABINET C1		PATCH PANEL C1
FU-00A2	C1-E009-00A	CH. 00 YEL
FU-00B	C1-E009-00B	CH. 00 BRN
FU-01B2	C1-E009-01B	CH. 01 YEL
FU-01C	C1-E009-01C	CH. 01 BRN
FU-02C2	C1-E009-02C	CH. 02 YEL
FU-02A	C1-E009-02A	CH. 02 BRN
FU-03A2	C1-E009-03A	CH. 03 YEL
FU-03B	C1-E009-03B	CH. 03 BRN
FU-04B2	C1-E009-04B	CH. 04 YEL
FU-04C	C1-E009-04C	CH. 04 BRN
FU-05C2	C1-E009-05C	CH. 05 YEL
FU-05A	C1-E009-05A	CH. 05 BRN
FU-06A2	C1-E009-06A	CH. 06 YEL
FU-06B	C1-E009-06B	CH. 06 BRN
FU-07B2	C1-E009-07B	CH. 07 YEL
FU-07C	C1-E009-07C	CH. 07 BRN
FU-08C2	C1-E009-08C	CH. 08 YEL
FU-08A	C1-E009-08A	CH. 08 BRN
FU-09A2	C1-E009-09A	CH. 09 YEL
FU-09B	C1-E009-09B	CH. 09 BRN
FU-10B2	C1-E009-10B	CH. 10 YEL
FU-10C	C1-E009-10C	CH. 10 BRN
FU-11C2	C1-E009-11C	CH. 11 YEL
FU-11A	C1-E009-11A	CH. 11 BRN
FU-12A2	C1-E009-12A	CH. 12 YEL
FU-12B	C1-E009-12B	CH. 12 BRN
FU-13B2	C1-E009-13B	CH. 13 YEL
FU-13C	C1-E009-13C	CH. 13 BRN
FU-14C2	C1-E009-14C	CH. 14 YEL
FU-14A	C1-E009-14A	CH. 14 BRN
FU-15A2	C1-E009-15A	CH. 15 YEL
FU-15B	C1-E009-15B	CH. 15 BRN
FU-16B2	C1-E009-16B	CH. 16 YEL
FU-16C	C1-E009-16C	CH. 16 BRN
FU-17C2	C1-E009-17C	CH. 17 YEL
FU-17A	C1-E009-17A	CH. 17 BRN

POWER CONTROL CABINET C2		PATCH PANEL C2
FU-00A2	C2-E009-00A	CH. 00 YEL
FU-00B	C2-E009-00B	CH. 00 BRN
FU-01B2	C2-E009-01B	CH. 01 YEL
FU-01C	C2-E009-01C	CH. 01 BRN
FU-02C2	C2-E009-02C	CH. 02 YEL
FU-02A	C2-E009-02A	CH. 02 BRN
FU-03A2	C2-E009-03A	CH. 03 YEL
FU-03B	C2-E009-03B	CH. 03 BRN
FU-04B2	C2-E009-04B	CH. 04 YEL
FU-04C	C2-E009-04C	CH. 04 BRN
FU-05C2	C2-E009-05C	CH. 05 YEL
FU-05A	C2-E009-05A	CH. 05 BRN
FU-06A2	C2-E009-06A	CH. 06 YEL
FU-06B	C2-E009-06B	CH. 06 BRN
FU-07B2	C2-E009-07B	CH. 07 YEL
FU-07C	C2-E009-07C	CH. 07 BRN
FU-08C2	C2-E009-08C	CH. 08 YEL
FU-08A	C2-E009-08A	CH. 08 BRN
FU-09A2	C2-E009-09A	CH. 09 YEL
FU-09B	C2-E009-09B	CH. 09 BRN
FU-10B2	C2-E009-10B	CH. 10 YEL
FU-10C	C2-E009-10C	CH. 10 BRN
FU-11C2	C2-E009-11C	CH. 11 YEL
FU-11A	C2-E009-11A	CH. 11 BRN
FU-12A2	C2-E009-12A	CH. 12 YEL
FU-12B	C2-E009-12B	CH. 12 BRN
FU-13B2	C2-E009-13B	CH. 13 YEL
FU-13C	C2-E009-13C	CH. 13 BRN
FU-14C2	C2-E009-14C	CH. 14 YEL
FU-14A	C2-E009-14A	CH. 14 BRN
FU-15A2	C2-E009-15A	CH. 15 YEL
FU-15B	C2-E009-15B	CH. 15 BRN
FU-16B2	C2-E009-16B	CH. 16 YEL
FU-16C	C2-E009-16C	CH. 16 BRN
FU-17C2	C2-E009-17C	CH. 17 YEL
FU-17A	C2-E009-17A	CH. 17 BRN

POWER CONTROL CABINET C3		PATCH PANEL C3
FU-00A2	C3-E009-00A	CH. 00 YEL
FU-00B	C3-E009-00B	CH. 00 BRN
FU-01B2	C3-E009-01B	CH. 01 YEL
FU-01C	C3-E009-01C	CH. 01 BRN
FU-02C2	C3-E009-02C	CH. 02 YEL
FU-02A	C3-E009-02A	CH. 02 BRN
FU-03A2	C3-E009-03A	CH. 03 YEL
FU-03B	C3-E009-03B	CH. 03 BRN
FU-04B2	C3-E009-04B	CH. 04 YEL
FU-04C	C3-E009-04C	CH. 04 BRN
FU-05C2	C3-E009-05C	CH. 05 YEL
FU-05A	C3-E009-05A	CH. 05 BRN
FU-06A2	C3-E009-06A	CH. 06 YEL
FU-06B	C3-E009-06B	CH. 06 BRN
FU-07B2	C3-E009-07B	CH. 07 YEL
FU-07C	C3-E009-07C	CH. 07 BRN
FU-08C2	C3-E009-08C	CH. 08 YEL
FU-08A	C3-E009-08A	CH. 08 BRN
FU-09A2	C3-E009-09A	CH. 09 YEL
FU-09B	C3-E009-09B	CH. 09 BRN
FU-10B2	C3-E009-10B	CH. 10 YEL
FU-10C	C3-E009-10C	CH. 10 BRN
FU-11C2	C3-E009-11C	CH. 11 YEL
FU-11A	C3-E009-11A	CH. 11 BRN

NOTE:

1. DASHED LINES INDICATE FIELD WIRING.

DEVELOPMENT ONE, INC.
1611 East Fourth Street, Suite 250
Santa Ana, California 92701
J.Bruce Camino, Architect, AIA, NCARB
(714) 689-0298
(714) 648-0197 FAX

DATE	SYM	REVISION	BY	A'PD
10/19/09		100% FINAL DESIGN		

NATIONAL AERONAUTICS AND SPACE ADMINISTRATION
DRYDEN FLIGHT RESEARCH CENTER
EDWARDS, CA

DRAWING TITLE
480VAC POWER SYSTEM
PCC TYPE-C
CABLE SCHEDULE

PROJECT TITLE
REPAIR BUILDING 4820 FLIGHT LOADS LABORATORY
POWER CONTROL UPGRADE

APPROVALS	DATE
Chief, Facilities Engineering & Asset Mgmt. Office	6-2-10
Project Manager	5.13.10
Security Office	5/25/10
Project Inspector	5-17-10
Safety Office	6-8-10
Telecom	5/24/10

DRAWN BY	M. HENNIGH	DATE STRTD	09/17/08
W.O. #	95099	DATE PRNTD	04/26/10
PLOT SCALE		TRADE Sht. No.	E-010
CAD FILE NAME			

SHEET No. 21 of 125

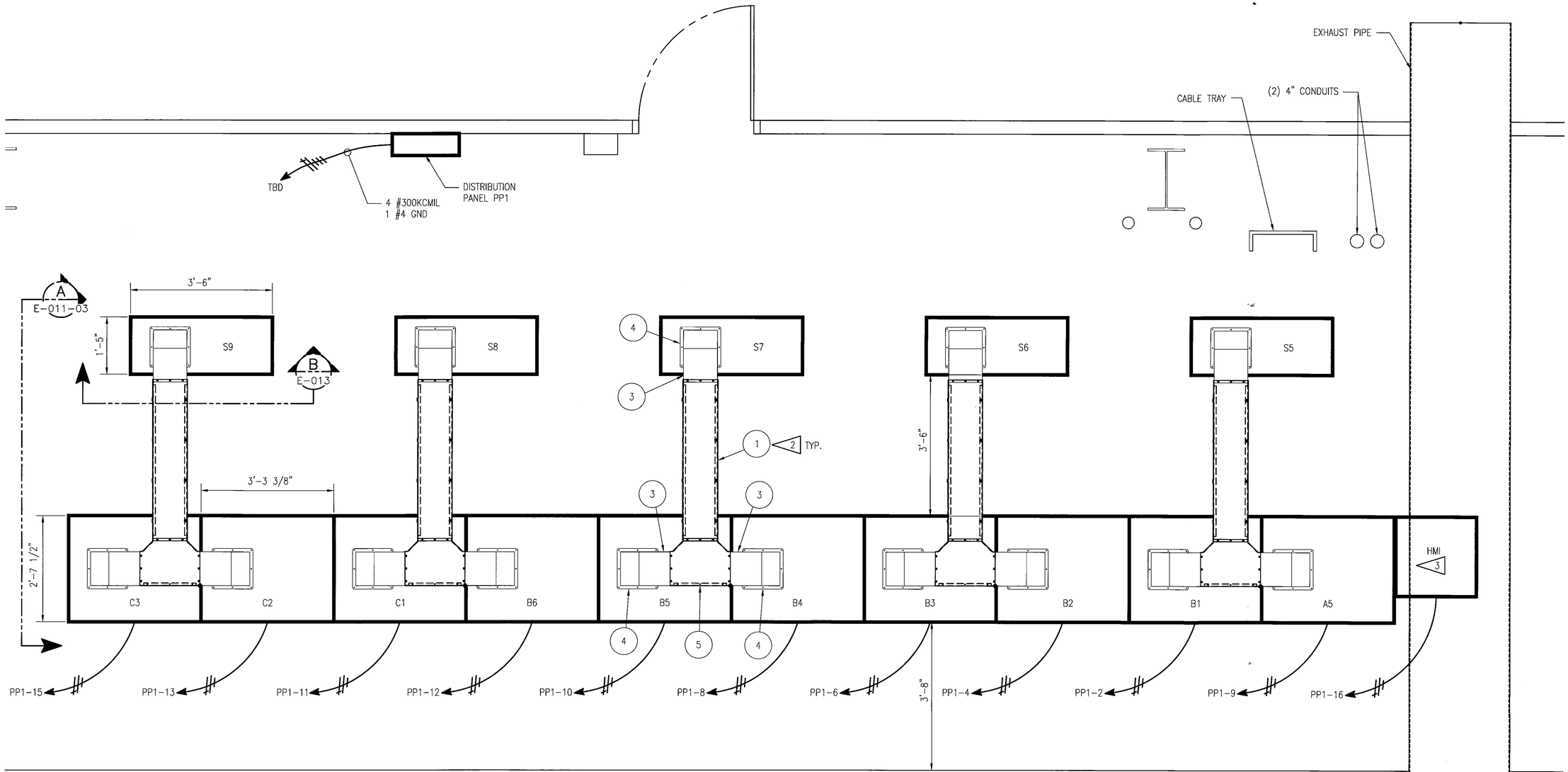

MEZZANINE PLAN DETAIL 1
SCALE: 3/4"=1'-0" E-002

NOTES:

1. ALL WIRING SHALL BE #10 UNLESS OTHERWISE INDICATED.
2. BILL OF MATERIALS FOR ITEM BUBBLES IS LOCATED ON DRAWING E-011-03. ITEMS FOR EACH DUCT RUN ARE TYPICAL.
3. SEE DRAWING I-090 FOR HMI ENCLOSURE DETAILS.

BRIAN JEROME GARLAND — REGISTERED ENGINEER — ACKNOWLEDGE — No. 113530 — STATE OF TENNESSEE

DEVELOPMENT ONE, INC.
1611 East Fourth Street, Suite 250
Santa Ana, California 92701
J.Bruce Camino, Architect, AIA, NCARB
(714) 689-0298
(714) 648-0197 FAX

DATE	SYM	REVISION	BY	A'PD
10/19/09		100% FINAL DESIGN		

NATIONAL AERONAUTICS AND SPACE ADMINISTRATION
DRYDEN FLIGHT RESEARCH CENTER
EDWARDS, CA

DRAWING TITLE
MEZZANINE POWER PLAN AND DETAILS SHEET 1

PROJECT TITLE
REPAIR BUILDING 4820 FLIGHT LOADS LABORATORY POWER CONTROL UPGRADE

APPROVALS	DATE
Chief, Facilities Engineering & Asset Mgmt. Office	6-2-10
Project Manager	5.13.10
Security Office	5/25/10
Project Inspector	5.17.10
Safety Office	6-1-10
Telecom	5/26/10

DRAWN BY	M. HENNIGH	DATE STRTD	09/17/08
W.O. #	95099	DATE PRNTD	04/26/10
PLOT SCALE		TRADE SH. No.	E-011-01
CAD FILE NAME			SHEET No. 22 of 125

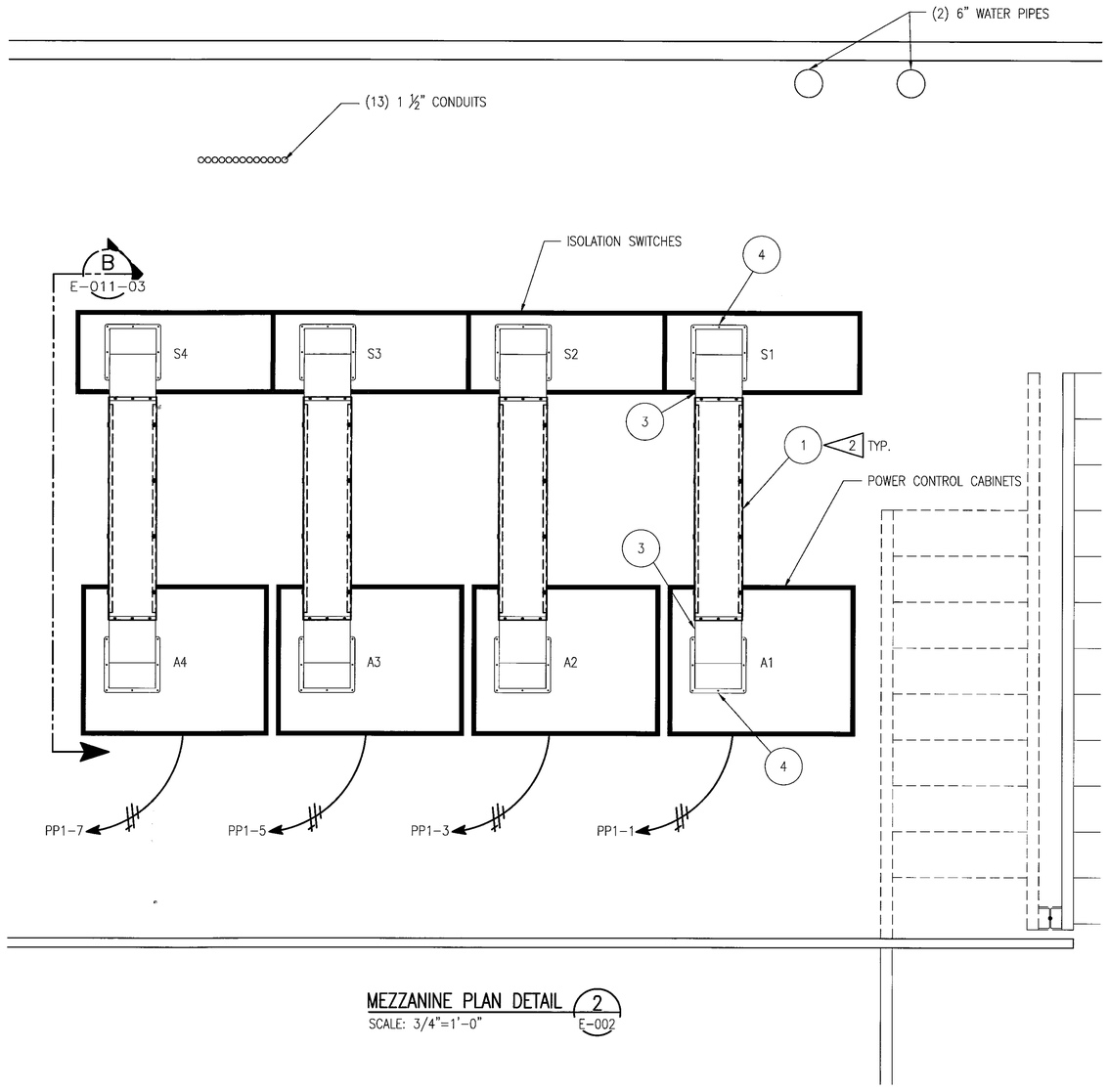

MEZZANINE PLAN DETAIL 2
SCALE: 3/4"=1'-0" E-002

NOTES:

1. ALL WIRING SHALL BE #10 UNLESS OTHERWISE INDICATED.
2. BILL OF MATERIALS FOR ITEM BUBBLES IS LOCATED ON DRAWING E-011-03. ITEMS FOR EACH DUCT RUN ARE TYPICAL.

BRIAN JEROME GARLAND
REGISTERED ENGINEER
AGRICULTURE
No. 113350
STATE OF TENNESSEE

DEVELOPMENT ONE, INC.
1611 East Fourth Street, Suite 250
Santa Ana, California 92701
J.Bruce Camino, Architect, AIA, NCARB
(714) 689-0298
(714) 648-0197 FAX

DATE	SYM	REVISION	BY	A'PD
10/19/09		100% FINAL DESIGN		

NATIONAL AERONAUTICS AND SPACE ADMINISTRATION
DRYDEN FLIGHT RESEARCH CENTER
EDWARDS, CA

DRAWING TITLE
MEZZANINE POWER PLAN AND DETAILS SHEET 2

PROJECT TITLE
REPAIR BUILDING 4820 FLIGHT LOADS LABORATORY POWER CONTROL UPGRADE

APPROVALS	DATE
Chief, Facilities Engineering & Asset Mgmt. Office	6-2-10
Project Manager	5.13.10
Security Office	5/25/10
Project Requestor	5.17.10
Safety Office	6-1-10
Telecom	5/26/10

DRAWN BY	M. HENNIGH	DATE STRTD	09/17/08
W.O. #	95099	DATE PRNTD	04/26/10
PLOT SCALE		TRADE SH. No.	E-011-02
CAD FILE NAME			SHEET No. 23 of 125

BILL OF MATERIAL				
ITEM	QTY	DESCRIPTION	MANUFACTURER	PART NUMBER
1	9	HOFFMAN WIREWAY	HOFFMAN	F1010T148GVP
2	9	HOFFMAN WIREWAY	HOFFMAN	F1010T112GVP
3	23	90 DEGREE SWEEP ELBOW	HOFFMAN	F1010G90SE
4	23	PANEL ADAPTER	HOFFMAN	F1010GPA
5	5	SWEEP TEE	HOFFMAN	F1010T

NOTES:

1. PLAN VIEW VISUAL OF ITEMS ON DRAWINGS E-011-01 AND E-011-02.

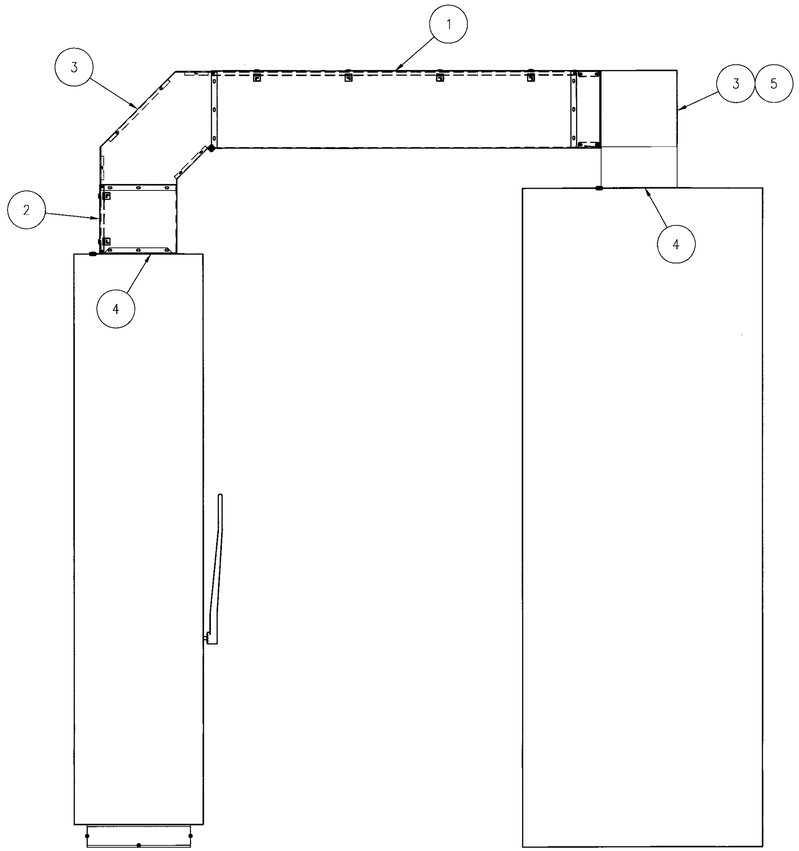

SECTION A
SCALE: 1:10
E-011-01

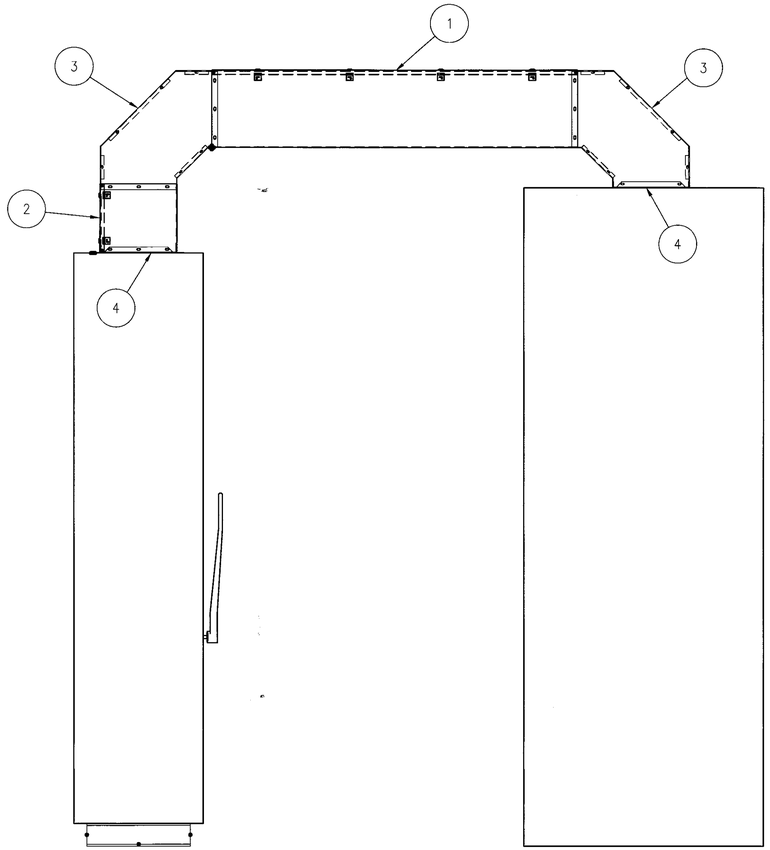

SECTION B
SCALE: 1:10
E-011-02

DEVELOPMENT ONE, INC.
1611 East Fourth Street, Suite 250
Santa Ana, California 92701
J.Bruce Camino, Architect, AIA, NCARB
(714) 689-0298
(714) 648-0197 FAX

BRIAN JEROME GARLAND — REGISTERED ENGINEER — AGRICULTURE — No. 113330 — STATE OF TENNESSEE

DATE	SYM	REVISION	BY	A'PD
10/19/09		100% FINAL DESIGN		

NATIONAL AERONAUTICS AND SPACE ADMINISTRATION
DRYDEN FLIGHT RESEARCH CENTER
EDWARDS, CA

DRAWING TITLE
MEZZANINE POWER PLAN AND DETAILS SHEET 3

PROJECT TITLE
REPAIR BUILDING 4820 FLIGHT LOADS LABORATORY POWER CONTROL UPGRADE

APPROVALS	DATE
Chief Facilities Engineering & Asset Mgmt. Office	6-2-10
Project Manager	5.13.10
Security Office	5/25/10
Project Inspector	5.17.10
Safety Office	6-1-10
Telecom	5/24/10

DRAWN BY	M. HENNIGH	DATE STRTD	09/17/08
W.O. #	95099	DATE PRNTD	04/26/10
PLOT SCALE		TRADE SH. No.	E-011-03
CAD FILE NAME		SHEET No.	24 of 125

NOTES:

1. FIELD VERIFY STRUCTURAL COLUMN LOCATIONS FOR MINIMUM CLEARANCE DIMENSIONS AS SHOWN PRIOR TO FINAL INSTALLATION OF ANY CABINETS OR PANLES.
2. PURGE PANELS HAVE DOUBLE SIDED DOOR ACCESS PANELS.

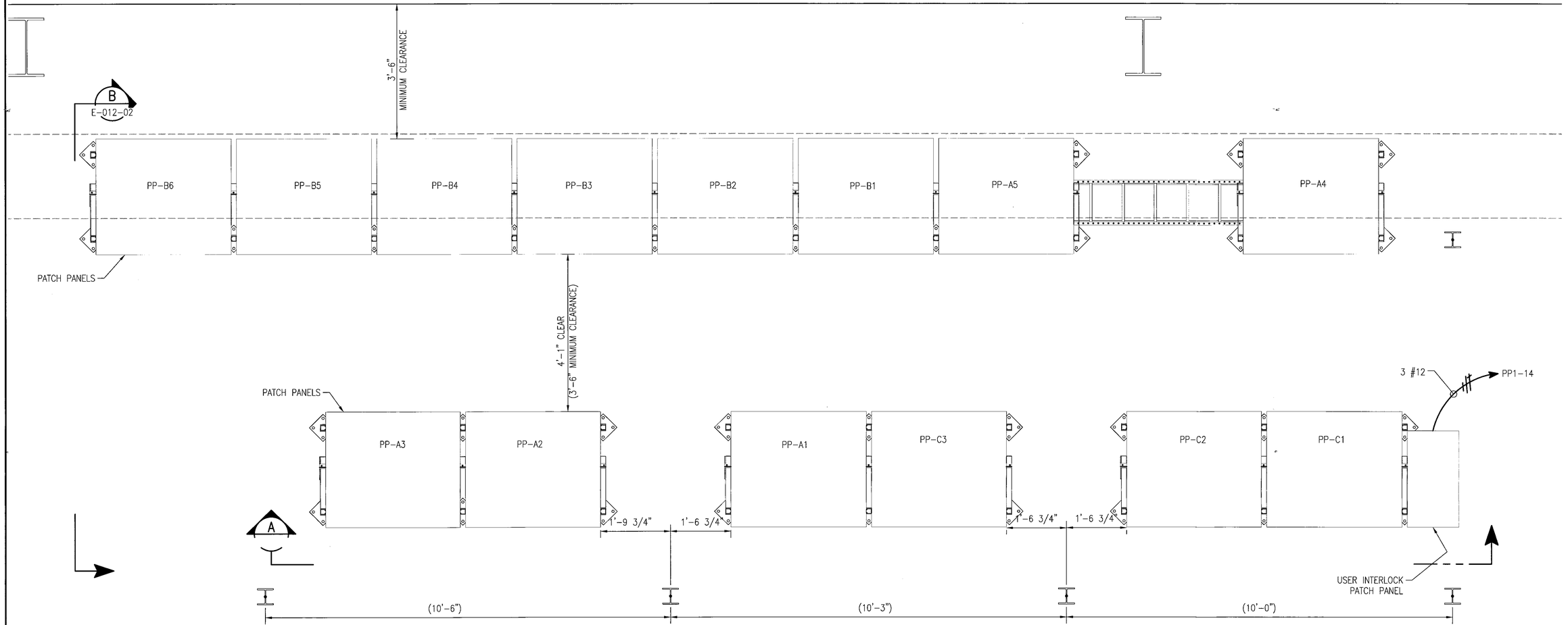

MAIN FLOOR – PLAN (1 / E-003)
SCALE: 3/4"=1'-0"

BRIAN JEROME GARLAND — REGISTERED ENGINEER — AGRICULTURE — No. 114338 — STATE OF TENNESSEE

DEVELOPMENT ONE, INC.
1611 East Fourth Street, Suite 250
Santa Ana, California 92701
J.Bruce Camino, Architect, AIA, NCARB
(714) 689-0298
(714) 648-0197 FAX

DATE	SYM	REVISION	BY	A'PD
10/19/09		100% FINAL DESIGN		

NATIONAL AERONAUTICS AND SPACE ADMINISTRATION
DRYDEN FLIGHT RESEARCH CENTER
EDWARDS, CA

DRAWING TITLE
MAIN FLOOR PLAN
DETAIL

PROJECT TITLE
REPAIR BUILDING 4820 FLIGHT LOADS LABORATORY
POWER CONTROL UPGRADE

APPROVALS	DATE
Chief, Facilities Engineering & Asset Mgmt. Office	6-2-10
Project Manager	5.13.10
Security Office	5/25/10
Project Requestor	5-17-10
Safety Office	6-1-10
Telecom	5/26/10

DRAWN BY	M. HENNIGH	DATE STRTD	09/17/08
W.O. #	95099	DATE PRNTD	04/26/10
PLOT SCALE		TRADE SH. No.	E-012-01
CAD FILE NAME			SHEET No. 25 of 125

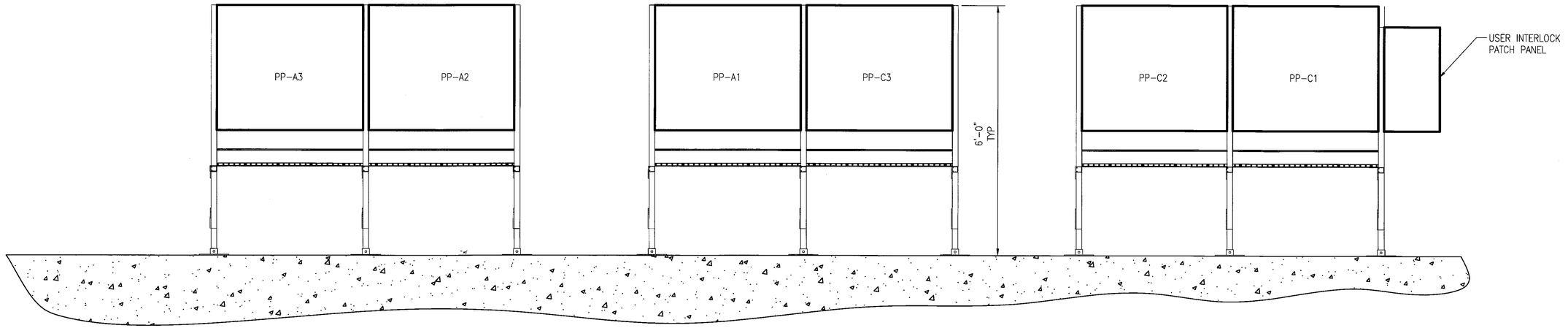

SECTION A
SCALE: 3/4"=1'-0" E-012-01

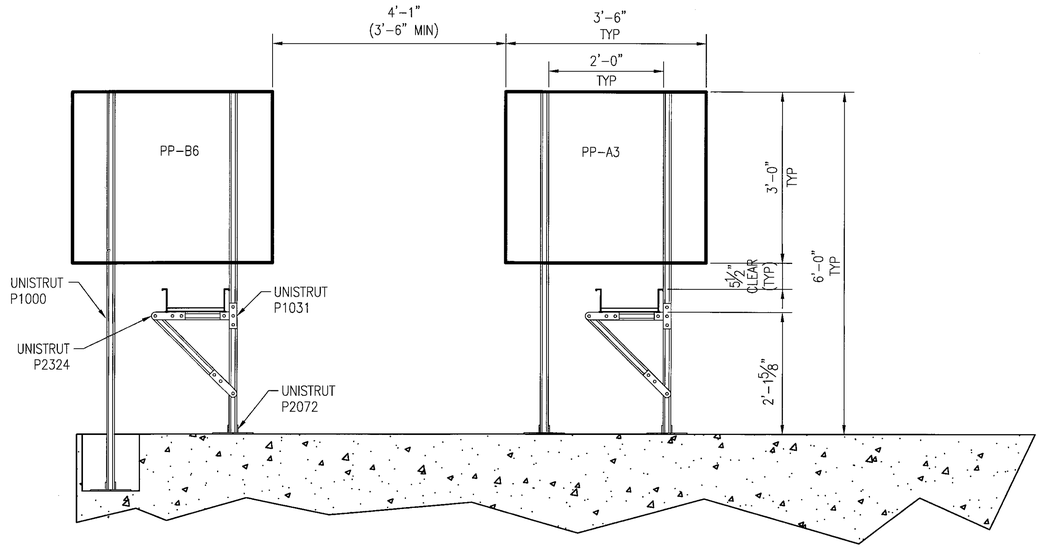

SECTION B
SCALE: 3/4"=1'-0" E-012-01

DEVELOPMENT ONE, INC.
1611 East Fourth Street, Suite 250
Santa Ana, California 92701
J.Bruce Camino, Architect, AIA, NCARB
(714) 689-0298
(714) 648-0197 FAX

DATE	SYM	REVISION	BY	A'PD
10/19/09		100% FINAL DESIGN		

NATIONAL AERONAUTICS AND SPACE ADMINISTRATION
DRYDEN FLIGHT RESEARCH CENTER
EDWARDS, CA

DRAWING TITLE
MAIN FLOOR POWER ELEVATIONS

PROJECT TITLE
REPAIR BUILDING 4820 FLIGHT LOADS LABORATORY POWER CONTROL UPGRADE

APPROVALS	DATE
Chief, Facilities Engineering & Asset Mgmt. Office	6-2-10
Project Manager	5.13.10
Security Office	5/25/10
Project Requestor	5-17-10
Safety Office	6-1-10
Telecom	5/26/10

DRAWN BY	M. HENNIGH	DATE STRTD	09/17/08
W.O. #	95099	DATE PRNTD	04/26/10
PLOT SCALE		TRADE SH. No.	E-012-02
CAD FILE NAME			SHEET No. 26 of 125

BILL OF MATERIALS				
ITEM	QTY	DESCRIPTION	MANUFACTURER	PART NUMBER
1	9	ISOLATION SWITCH – BOTTOM FEED	BOLTSWITCH, INC.	E4275B
2	9	BOTTOM FEED SWITCH W/TYPE 2 POSITION 1 AUX SWITCH	BOLTSWITCH, INC.	VLB3411G5
3	27	DUMMY FUSE	BOLTSWITCH, INC.	DFL611
4	459	TERMINAL LUGS	BOLTSWITCH, INC.	RA600

NOTES:

1. AUXILIARY CONTACT SHALL BE DOUBLE POLE, DOUBLE THROW RATED FOR 120V.
2. SEE DRAWING E-014 FOR ISOLATION SWITCH TO PCC POWER CABLE SCHEDULE.
3. SEE DRAWING E-014 FOR FLL TRANSFORMER TO ISOLATION SWITCH POWER CABLE SCHEDULE.
4. SEE DRAWING E-004 FOR SIZES AND QUANTITIES OF POWER CABLES.
5. SEE DRAWING E-014 FOR ISOLATION SWITCH AUXILIARY CONTACT WIRING SCHEDULE.
6. ISOLATION SWITCHES 1-4 WILL BE THE ONLY SWITCHES WITH ONE AUXILIARY CONTACT WIRED.

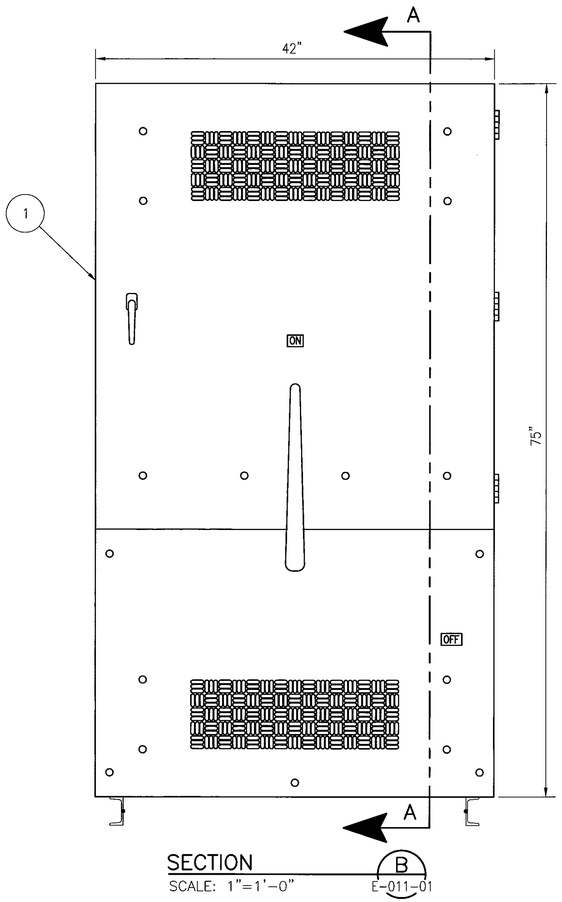

SECTION
SCALE: 1"=1'-0"

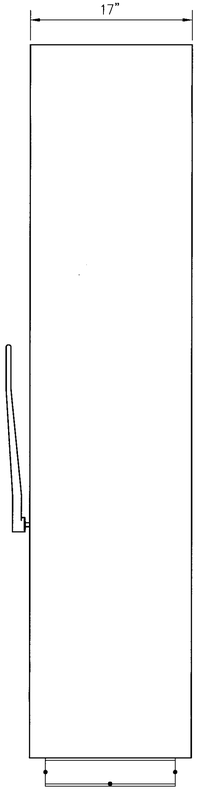

RIGHT SIDE VIEW
SCALE: 1:8

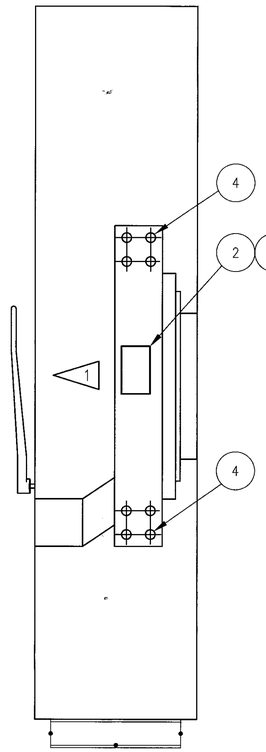

SECTION A-A
SCALE: 1:8

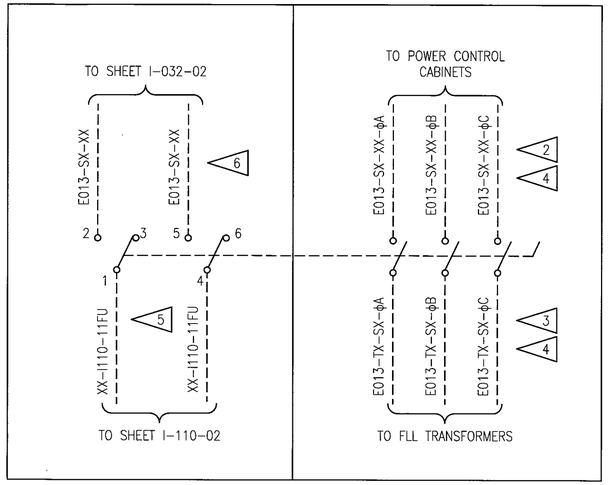

AUXILIARY CONTACT WIRING

MAIN POWER WIRING

BRIAN JEROME GARLAND
REGISTERED ENGINEER
AGRICULTURE
No. 113230
STATE OF TENNESSEE

DEVELOPMENT ONE, INC.
1611 East Fourth Street, Suite 250
Santa Ana, California 92701
J.Bruce Camino, Architect, AIA, NCARB
(714) 689-0298
(714) 648-0197 FAX

DATE	SYM	REVISION	BY	A'PD
10/19/09		100% FINAL DESIGN		

NATIONAL AERONAUTICS AND SPACE ADMINISTRATION
DRYDEN FLIGHT RESEARCH CENTER
EDWARDS, CA

DRAWING TITLE
480VAC POWER SYSTEM
TYPICAL ISOLATION SWITCH

PROJECT TITLE
REPAIR BUILDING 4820 FLIGHT LOADS LABORATORY
POWER CONTROL UPGRADE

APPROVALS	DATE
Chief, Facilities Engineering & Asset Mgmt. Office	6-2-10
Project Manager	5.13.10
Safety Office	5/18/10
Project Engineer	5.17.10
Safety Office	6-1-10
Telecom	5/24/10

DRAWN BY	M. HENNIGH	DATE SIRTD	09/17/08
W.O. #	95099	DATE PRNTD	04/26/10
PLOT SCALE		TRADE SH. No.	E-013
CAD FILE NAME		SHEET No.	27 of 125

ISOLATION SWITCH AUXILIARY CONTACT WIRING SCHEDULE															
ORIGINATION	SWITCH S1	SWITCH S2	SWITCH S3	SWITCH S4	SWITCH S5		SWITCH S6		SWITCH S7		SWITCH S8		SWITCH S9	
DESTINATION	PCC A1	PCC A2	PCC A3	PCC A4	PCC A5	PCC B1	PCC B2	PCC B3	PCC B4	PCC B5	PCC B6	PCC C1	PCC C2	PCC C3
1	A1-I110-11FU	A2-I110-11FU	A3-I110-11FU	A4-I110-11FU	A5-I110-11FU	N/C	B2-I110-11FU	N/C	B4-I110-11FU	N/C	B6-I110-11FU	N/C	C2-I110-11FU	N/C
2	E013-S1-A1	E013-S2-A2	E013-S3-A3	E013-S4-A4	E013-S5-A5	N/C	E013-S6-B2	N/C	E013-S7-B4	N/C	E013-S8-B6	N/C	E013-S9-C2	N/C
3	N/C	N/C	N/C	N/C	N/C	N/C	N/C	N/C	N/C	N/C	N/C	N/C	N/C	N/C
4	N/C	N/C	N/C	N/C	N/C	B1-I110-11FU	N/C	B3-I110-11FU	N/C	B5-I110-11FU	N/C	C1-I110-11FU	N/C	C3-I110-11FU
5	N/C	N/C	N/C	N/C	N/C	E013-S5-B1	N/C	E013-S6-B3	N/C	E013-S7-B5	N/C	E013-S8-C1	N/C	E013-S9-C3
6	N/C	N/C	N/C	N/C	N/C	N/C	N/C	N/C	N/C	N/C	N/C	N/C	N/C	N/C

ISOLATION SWITCH TO PCC POWER WIRING SCHEDULE														
ORIGINATION	SWITCH S1	SWITCH S2	SWITCH S3	SWITCH S4	SWITCH S5		SWITCH S6		SWITCH S7		SWITCH S8		SWITCH S9	
DESTINATION	PCC A1	PCC A2	PCC A3	PCC A4	PCC A5	PCC B1	PCC B2	PCC B3	PCC B4	PCC B5	PCC B6	PCC C1	PCC C2	PCC C3
PHASE A	E013-S1-A1-ØA	E013-S2-A2-ØA	E013-S3-A3-ØA	E013-S4-A4-ØA	E013-S5-A5-ØA	E013-S5-B1-ØA	E013-S6-B2-ØA	E013-S6-B3-ØA	E013-S7-B4-ØA	E013-S7-B5-ØA	E013-S8-B6-ØA	E013-S8-C1-ØA	E013-S9-C2-ØA	E013-S9-C3-ØA
PHASE B	E013-S1-A1-ØB	E013-S2-A2-ØB	E013-S3-A3-ØB	E013-S4-A4-ØB	E013-S5-A5-ØB	E013-S5-B1-ØB	E013-S6-B2-ØB	E013-S6-B3-ØB	E013-S7-B4-ØB	E013-S7-B5-ØB	E013-S8-B6-ØB	E013-S8-C1-ØB	E013-S9-C2-ØB	E013-S9-C3-ØB
PHASE C	E013-S1-A1-ØC	E013-S2-A2-ØC	E013-S3-A3-ØC	E013-S4-A4-ØC	E013-S5-A5-ØC	E013-S5-B1-ØC	E013-S6-B2-ØC	E013-S6-B3-ØC	E013-S7-B4-ØC	E013-S7-B5-ØC	E013-S8-B6-ØC	E013-S8-C1-ØC	E013-S9-C2-ØC	E013-S9-C3-ØC

FLL TRANSFORMERS TO ISOLATION SWITCH POWER WIRING SCHEDULE									
ORIGINATION	XFORMER 10	XFORMER 9	XFORMER 5	XFORMER 6	XFORMER 4	XFORMER 3	XFORMER 7	XFORMER 2	XFORMER 8
DESTINATION	SWITCH S1	SWITCH S2	SWITCH S3	SWITCH S4	SWITCH S5	SWITCH S6	SWITCH S7	SWITCH S8	SWITCH S9
PHASE A	E013-T10-S1-ØA	E013-T9-S2-ØA	E013-T5-S3-ØA	E013-T6-S4-ØA	E013-T4-S5-ØA	E013-T3-S6-ØA	E013-T7-S7-ØA	E013-T2-S8-ØA	E013-T8-S9-ØA
PHASE B	E013-T10-S1-ØB	E013-T9-S2-ØB	E013-T5-S3-ØB	E013-T6-S4-ØB	E013-T4-S5-ØB	E013-T3-S6-ØB	E013-T7-S7-ØB	E013-T2-S8-ØB	E013-T8-S9-ØB
PHASE C	E013-T10-S1-ØC	E013-T9-S2-ØC	E013-T5-S3-ØC	E013-T6-S4-ØC	E013-T4-S5-ØC	E013-T3-S6-ØC	E013-T7-S7-ØC	E013-T2-S8-ØC	E013-T8-S9-ØC

BRIAN JEROME GARLAND
REGISTERED ENGINEER
AGRICULTURAL
No. 113330
STATE OF TENNESSEE

DEVELOPMENT ONE, INC.
1611 East Fourth Street, Suite 250
Santa Ana, California 92701
J.Bruce Camino, Architect, AIA, NCARB
(714) 689-0298
(714) 648-0197 FAX

DATE	SYM	REVISION	BY	A'PD
10/19/09		100% FINAL DESIGN		

NATIONAL AERONAUTICS AND SPACE ADMINISTRATION
DRYDEN FLIGHT RESEARCH CENTER
EDWARDS, CA

DRAWING TITLE
480VAC POWER SYSTEM
TYPICAL ISOLATION SWITCH
CABLE SCHEDULE

PROJECT TITLE
REPAIR BUILDING 4820 FLIGHT LOADS LABORATORY
POWER CONTROL UPGRADE

APPROVALS	DATE
Chief Facilities Engineering & Asset Mgmt. Office	6-2-10
Project Manager	5/13/10
Security Office	5/25/10
Project Requestor	5-17-10
Safety Office	6-1-10
Telecom	5/26/10

DRAWN BY	M. HENNIGH	DATE STRTD	09/17/08
W.O. #	95099	DATE PRNTD	04/26/10
PLOT SCALE		TRADE SH. No.	E-014
CAD FILE NAME			SHEET No. 28 of 125

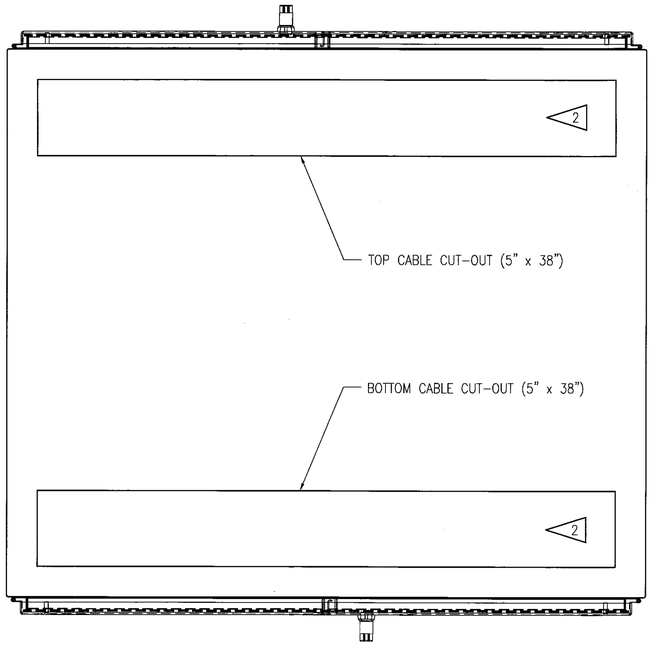

TOP VIEW
SCALE: 1:5

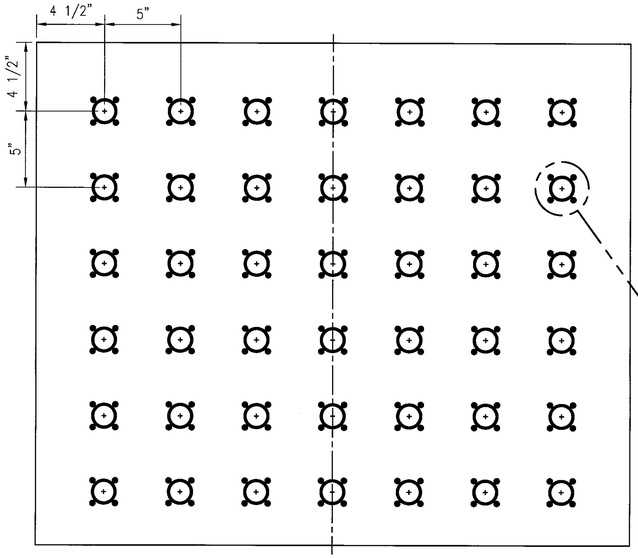

DRILL PATTERN
SCALE: 1:5

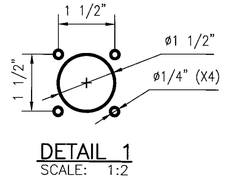

DETAIL 1
SCALE: 1:2

BILL OF MATERIAL				
ITEM	QTY	DESCRIPTION	MANUFACTURER	PART NUMBER
1	5	NEMA 12 36"X42"X36" ENCLOSURE W/ FRONT & REAR DOORS	HOFFMAN	CUSTOM
2	5	ENCLOSURE MOUNTING PANEL	HOFFMAN	A42P36
3	96	INSULATED FEMALE RECEPTACLE W/ THREADED STUD; RED	COOPER	E1016-1633S
4	96	INSULATED FEMALE RECEPTACLE W/ THREADED STUD; BLACK	COOPER	E1016-1631S
5	96	FEMALE TERMINAL CONNECTOR; RED	COOPER	E1016-577
6	96	FEMALE TERMINAL CONNECTOR; BLACK	COOPER	E1016-575
7	96	MALE PLUG; RED	COOPER	E1016-8364
8	96	MALE PLUG; BLACK	COOPER	E1016-8362
9	A/R	LAMACOID TAG		
10	10	DOOR SWITCH	HONEYWELL	GKMD09
11	10	DOOR SWITCH KEY	HONEYWELL	GKZ52M
12	A/R	CONTINUOUS GROMMET EDGING	VOLTREX	2579

NOTES:

1. DOOR SWITCH AND KEY MOUNTING TO BE DETERMINED IN THE FIELD.
2. DEBUR ALL MODIFIED METAL. ADD CONTINUOUS GROMMET EDGING AROUND CUT-OUT.
3. SEE DRAWING E-005 FOR ELECTRICAL AND GROUNDING SCHEMATIC.

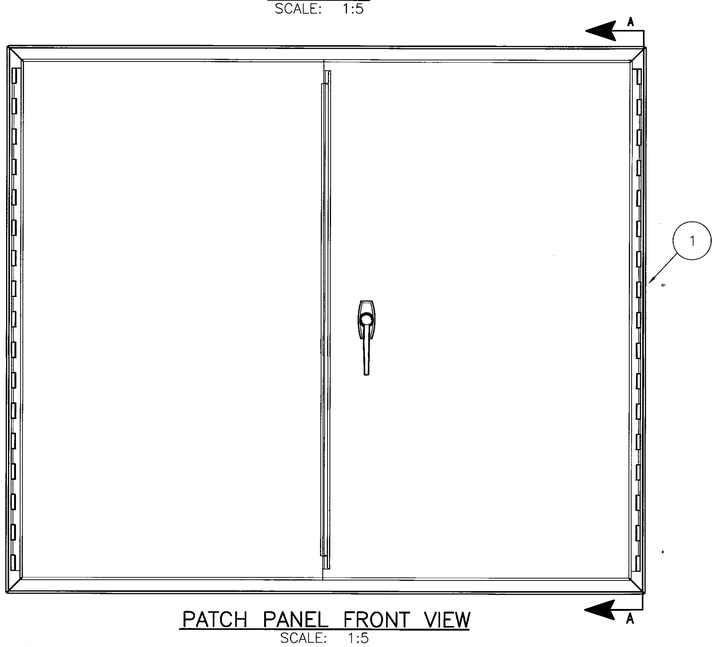

PATCH PANEL FRONT VIEW
SCALE: 1:5

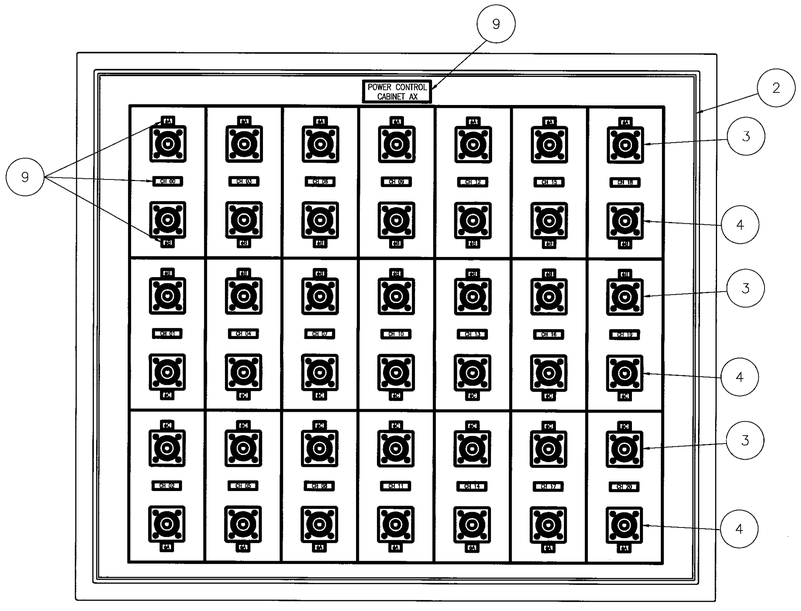

FRONT VIEW WITHOUT COVER
SCALE: 1:5

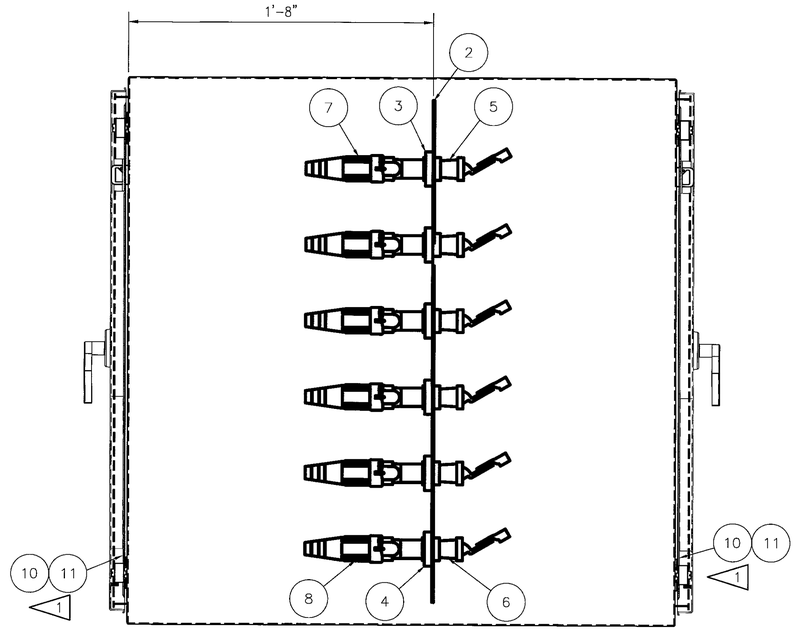

SECTION A-A
SCALE: 1:5

BRIAN JEROME GARLAND
REGISTERED ENGINEER
AGRICULTURE
ARCHITECTURE
COMMERCE
NO. 113330
STATE OF TENNESSEE

DEVELOPMENT ONE, INC.
1611 East Fourth Street, Suite 250
Santa Ana, California 92701
J.Bruce Camino, Architect, AIA, NCARB
(714) 689-0298
(714) 648-0197 FAX

DATE	SYM	REVISION	BY	A'PD
10/19/09		100% FINAL DESIGN		

NATIONAL AERONAUTICS AND SPACE ADMINISTRATION
DRYDEN FLIGHT RESEARCH CENTER
EDWARDS, CA

DRAWING TITLE
480VAC POWER SYSTEM
PCC TYPE-A PATCH PANEL
FABRICATION AND LAYOUT - TYPICAL

PROJECT TITLE
REPAIR BUILDING 4820 FLIGHT LOADS LABORATORY
POWER CONTROL UPGRADE

APPROVALS	DATE
Chief, Facilities Engineering & Asset Mgmt. Office	6-2-10
Project Manager	5/13/10
Safety Office	5/25/10
Project Inspector	5/7/10
Safety Office	6-1-10
Telecom	5/24/10

DRAWN BY	M. HENNIGH	DATE STRTD	09/17/08
W.O. #	95099	DATE PRNTD	04/26/10
PLOT SCALE		TRADE SK. No.	E-015
CAD FILE NAME		SHEET No.	29 of 125

BILL OF MATERIAL

ITEM	QTY	DESCRIPTION	MANUFACTURER	PART NUMBER
1	6	NEMA 12 36"X42"X36" ENCLOSURE W/ FRONT & REAR DOORS	HOFFMAN	CUSTOM
2	6	ENCLOSURE MOUNTING PANEL	HOFFMAN	A42P36
3	120	INSULATED FEMALE RECEPTACLE W/ THREADED STUD; ORANGE	COOPER	E1016-1634S
4	120	INSULATED FEMALE RECEPTACLE W/ THREADED STUD; BLUE	COOPER	E1016-1643S
5	120	FEMALE TERMINAL CONNECTOR; ORANGE	COOPER	E1016-578
6	120	FEMALE TERMINAL CONNECTOR; BLUE	COOPER	E1016-587
7	120	MALE PLUG; ORANGE	COOPER	E1016-8353
8	120	MALE PLUG; BLUE	COOPER	E1016-8356
9	A/R	LAMACOID TAG		
10	12	DOOR SWITCH	HONEYWELL	GKMD09
11	12	DOOR SWITCH KEY	HONEYWELL	GKZ52M
12	A/R	CONTINUOUS GROMMET EDGING	VOLTREX	2579

NOTES:

1. DOOR SWITCH AND KEY MOUNTING TO BE DETERMINED IN THE FIELD.
2. DEBUR ALL MODIFIED METAL. ADD CONTINUOUS GROMMET EDGING AROUND CUT-OUT.
3. SEE DRAWING E-007 FOR ELECTRICAL AND GROUNDING SCHEMATIC.

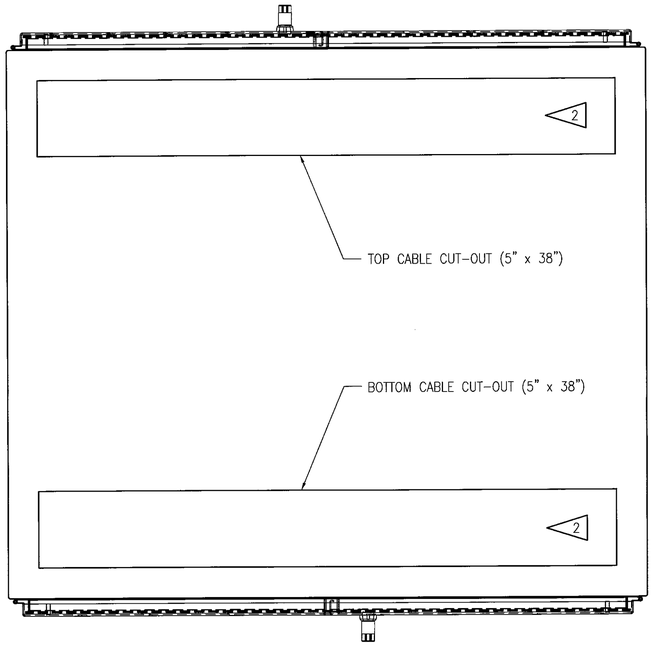

TOP VIEW
SCALE: 1:5

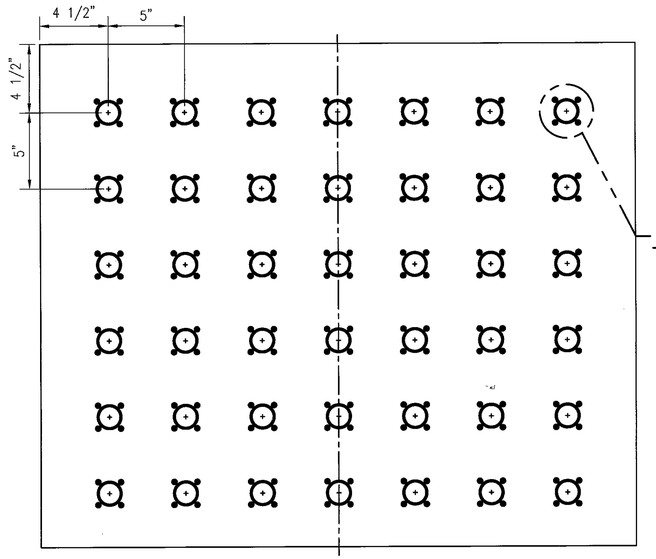

DRILL PATTERN
SCALE: 1:5

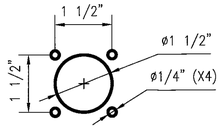

DETAIL 1
SCALE: 1:2

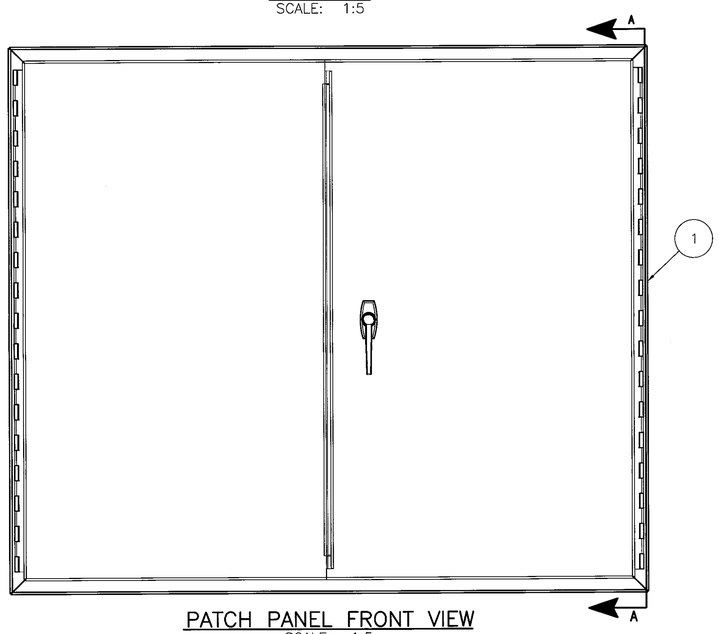

PATCH PANEL FRONT VIEW
SCALE: 1:5

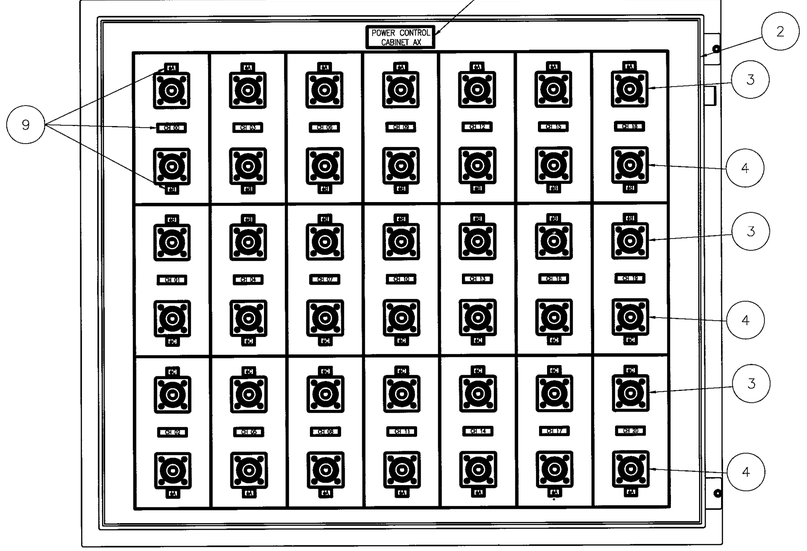

FRONT VIEW WITHOUT COVER
SCALE: 1:5

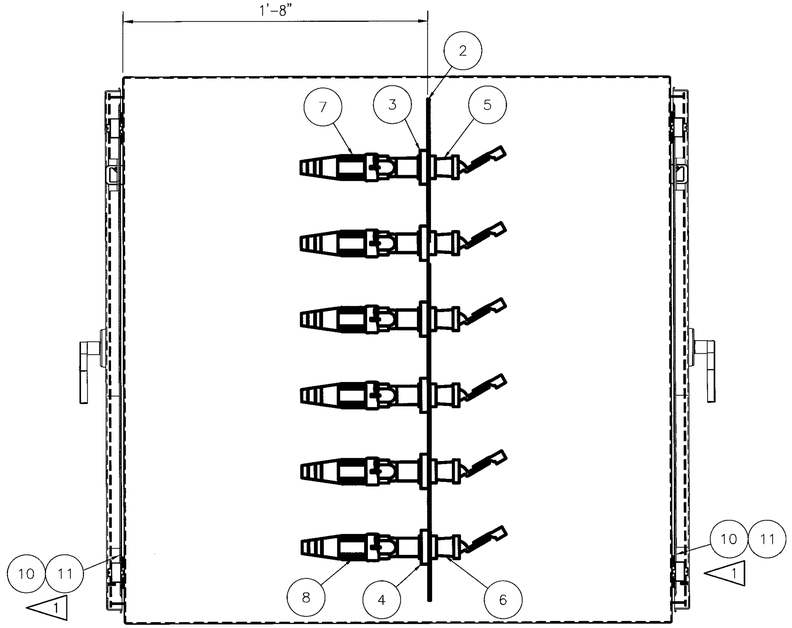

SECTION A-A
SCALE: 1:5

DEVELOPMENT ONE, INC.
1611 East Fourth Street, Suite 250
Santa Ana, California 92701
J.Bruce Camino, Architect, AIA, NCARB
(714) 689-0298
(714) 648-0197 FAX

BRIAN JEROME GARLAND — REGISTERED ENGINEER — AGRICULTURE — No. 113330 — STATE OF TENNESSEE

DATE	SYM	REVISION	BY	A'PD
10/19/09		100% FINAL DESIGN		

NATIONAL AERONAUTICS AND SPACE ADMINISTRATION
DRYDEN FLIGHT RESEARCH CENTER
EDWARDS, CA

DRAWING TITLE
480VAC POWER SYSTEM
PCC TYPE-B PATCH PANEL
FABRICATION AND LAYOUT - TYPICAL

PROJECT TITLE
REPAIR BUILDING 4820 FLIGHT LOADS LABORATORY
POWER CONTROL UPGRADE

APPROVALS	DATE
Chief, Facilities Engineering & Assets Mgmt. Office	6-2-10
Project Manager	5.13.10
Security Office	5/25/10
Project Engineer	5.17.10
Safety Office	6-1-10
Telecom	5/26/10

DRAWN BY	M. HENNIGH	DATE STRTD	09/17/08
W.O. #	95099	DATE PRNTD	04/26/10
PLOT SCALE	TRADE SH. No.	E-016	
CAD FILE NAME		SHEET No. 30 of 125	

BILL OF MATERIAL				
ITEM	QTY	DESCRIPTION	MANUFACTURER	PART NUMBER
1	3	NEMA 12 36"X42"X36" ENCLOSURE W/ FRONT & REAR DOORS	HOFFMAN	CUSTOM
2	3	ENCLOSURE MOUNTING PANEL	HOFFMAN	A42P36
3	48	INSULATED FEMALE RECEPTACLE W/ THREADED STUD; YELLOW	COOPER	E1016-1632S
4	48	INSULATED FEMALE RECEPTACLE W/ THREADED STUD; BROWN	COOPER	E1016-1687S
5	48	FEMALE TERMINAL CONNECTOR; YELLOW	COOPER	E1016-576
6	48	FEMALE TERMINAL CONNECTOR; BROWN	COOPER	E1016-590
7	48	MALE PLUG; YELLOW	COOPER	E1016-8351
8	48	MALE PLUG; BROWN	COOPER	E1016-8357
9	A/R	LAMACOID TAG		
10	6	DOOR SWITCH	HONEYWELL	GKMD09
11	6	DOOR SWITCH KEY	HONEYWELL	GKZ52M
12	A/R	CONTINUOUS GROMMET EDGING	VOLTREX	2579

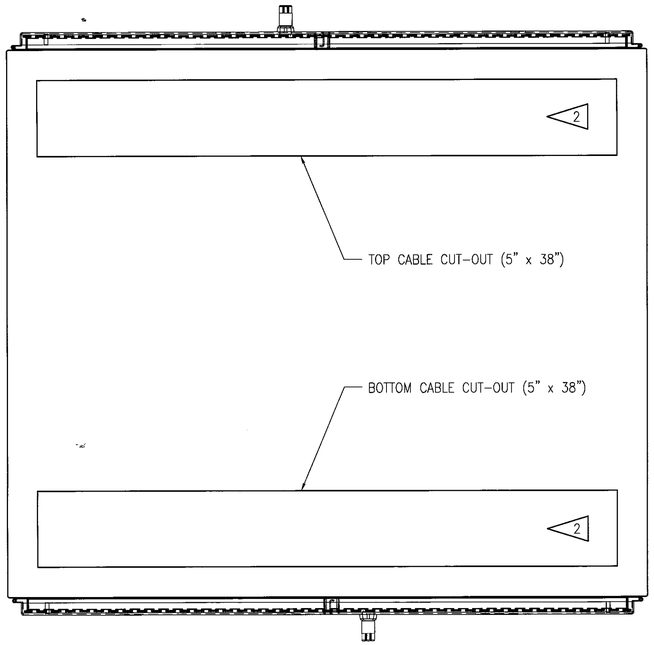

TOP VIEW
SCALE: 1:5

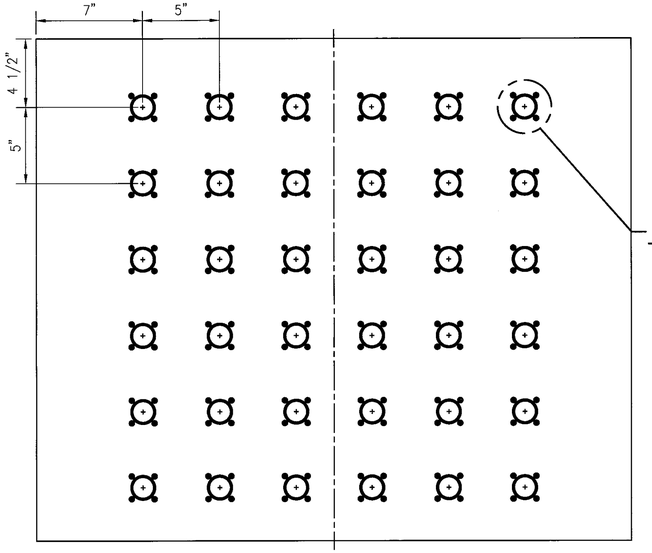

DRILL PATTERN
SCALE: 1:5

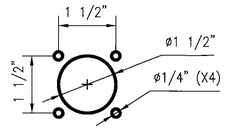

DETAIL 1
SCALE: 1:2

NOTES:

1. DOOR SWITCH AND KEY MOUNTING TO BE DETERMINED IN THE FIELD.
2. DEBUR ALL MODIFIED METAL. ADD CONTINUOUS GROMMET EDGING AROUND CUT-OUT.
3. SEE DRAWING E-009 FOR ELECTRICAL AND GROUNDING SCHEMATIC.

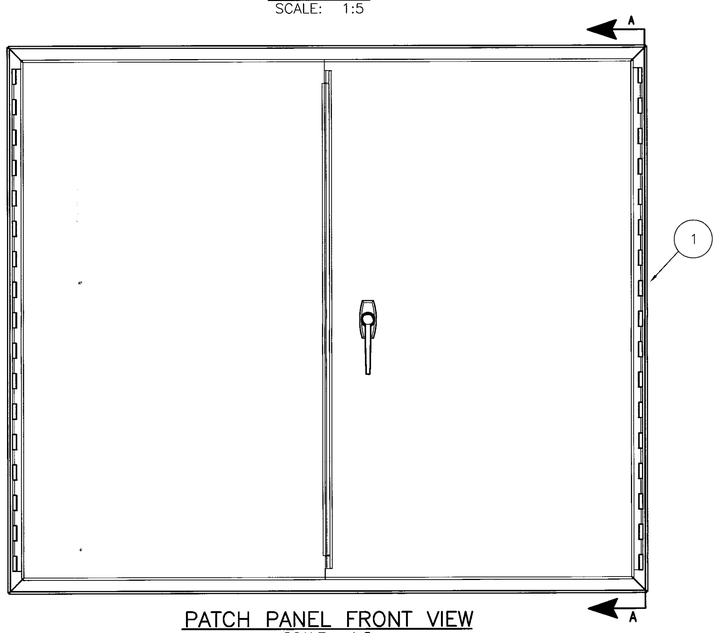

PATCH PANEL FRONT VIEW
SCALE: 1:5

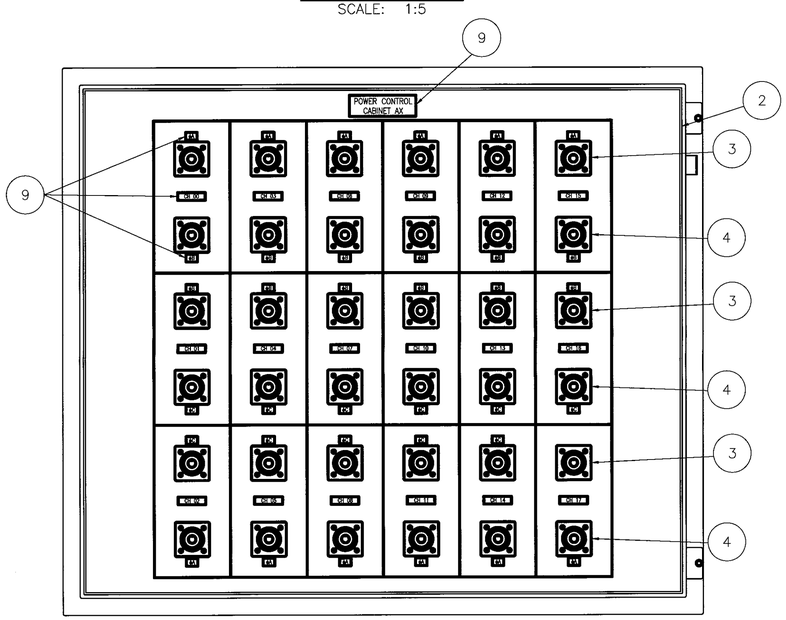

FRONT VIEW WITHOUT COVER
SCALE: 1:5

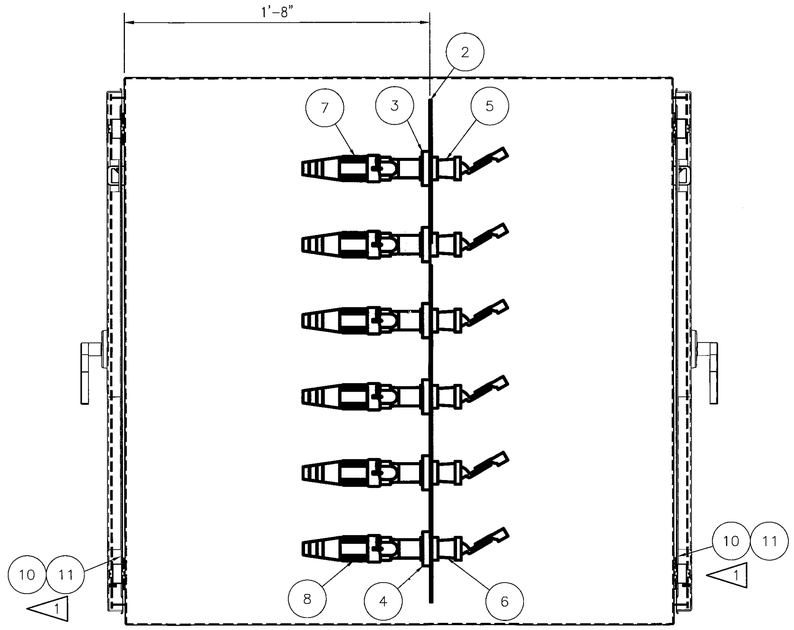

SECTION A-A
SCALE: 1:5

BRIAN JEROME GARLAND
REGISTERED ENGINEER
AGRICULTURE
No. 113330
STATE OF TENNESSEE

DEVELOPMENT ONE, INC.
1611 East Fourth Street, Suite 250
Santa Ana, California 92701
J.Bruce Camino, Architect, AIA, NCARB
(714) 689-0298
(714) 648-0197 FAX

DATE	SYM	REVISION	BY	A'PD
10/19/09		100% FINAL DESIGN		

NATIONAL AERONAUTICS AND SPACE ADMINISTRATION
DRYDEN FLIGHT RESEARCH CENTER
EDWARDS, CA

DRAWING TITLE
480VAC POWER SYSTEM
PCC TYPE-C PATCH PANEL
FABRICATION AND LAYOUT - TYPICAL

PROJECT TITLE
REPAIR BUILDING 4820 FLIGHT LOADS LABORATORY
POWER CONTROL UPGRADE

APPROVALS	DATE
Chief, Facilities Engineering & Asset Mgmt. Office: Dan Cooley	6-2-10
Project Manager:	5-13-10
Safety Office:	5/25/10
Project Requestor:	5-17-10
Safety Office:	6-7-10
Telecom:	5/24/10

DRAWN BY	M. HENNIGH	DATE STRTD	09/17/08
W.O. #	95099	DATE PRNTD	04/26/10
PLOT SCALE		TRADE SH. No.	E-017
CAD FILE NAME			

SHEET No. 31 of 125

SPECIFICATIONS:

ENCLOSURE TYPE: NEMA 1
TRANSFORMER SIZE: 50KVA EACH
NUMBER OF TRANSFORMERS PER ENCLOSURE: 6
NUMBER OF ENCLOSURES: 8
PRIMARY VOLTAGE: 3ϕ, 2-LEG, 480VAC
SECONDARY VOLTAGE: 1ϕ, 48VAC
DIMENSIONS: APPROX. 48"H x 72"W" x 24"D

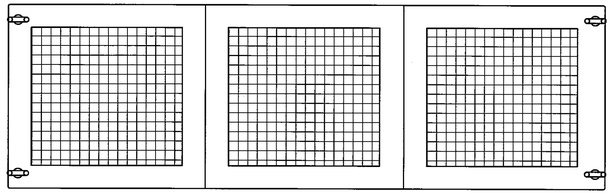

TOP VIEW
SCALE: 1:10

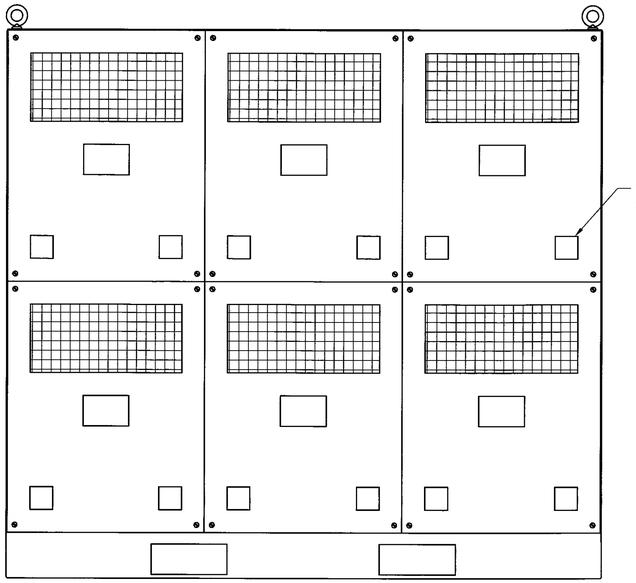

REAR VIEW
SCALE: 1:10

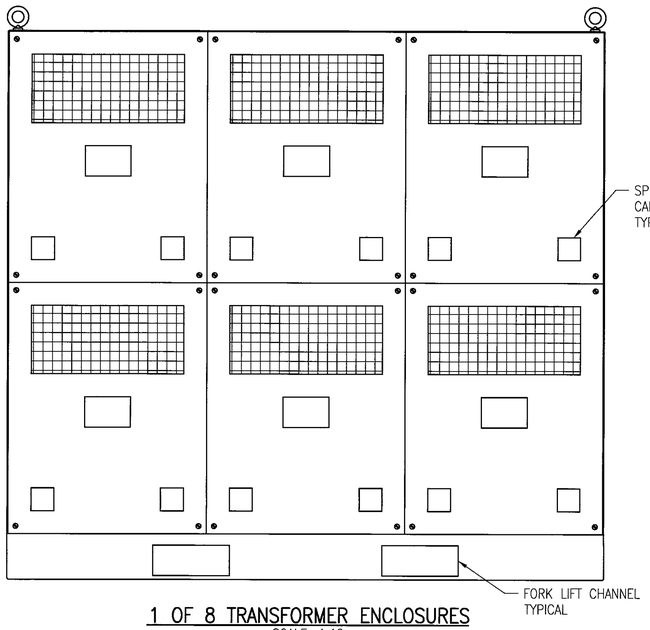

1 OF 8 TRANSFORMER ENCLOSURES
SCALE: 1:10

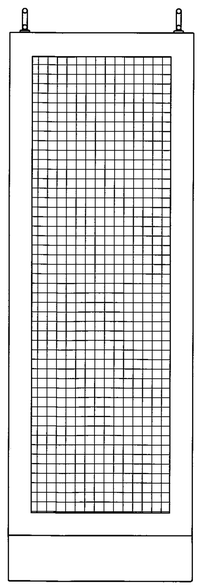

SIDE VIEW
SCALE: 1:10

BRIAN JEROME GARLAND
REGISTERED ENGINEER
AGRICULTURE
NO. 119552
STATE OF TENNESSEE

DEVELOPMENT ONE, INC.
1611 East Fourth Street, Suite 250
Santa Ana, California 92701
J.Bruce Camino, Architect, AIA, NCARB
(714) 689-0298
(714) 648-0197 FAX

DATE	SYM	REVISION	BY	A'PD
10/19/09		100% FINAL DESIGN		

NATIONAL AERONAUTICS AND SPACE ADMINISTRATION
DRYDEN FLIGHT RESEARCH CENTER
EDWARDS, CA

DRAWING TITLE
PCC TYPE C, 480VAC TO 48VAC
TRANSFORMERS ENCLOSURE
FABRICATION AND LAYOUT

PROJECT TITLE
REPAIR BUILDING 4820 FLIGHT LOADS LABORATORY
POWER CONTROL UPGRADE

APPROVALS	DATE
Chief, Facilities Engineering & Assets Mgmt. Office: Dan Lowery	6-2-10
Project Manager	5.13.10
Security Office	5/27/10
Project Requestor	5-17-10
Safety Office	6-4-10
Telecom	5/26/10

DRAWN BY	M. HENNIGH	DATE STRTD	09/17/08
W.O. #	95099	DATE PRNTD	04/26/10
PLOT SCALE		TRADE SH. No.	E-018
CAD FILE NAME			

SHEET No. 32 of 125

PPC1 TO 480V/48V TRANSFORMERS ENCLOSURE						
ORIGINATION	PPC1	PPC1	PPC1	PPC1	PPC1	PPC1
DESTINATION	ENCLOSURE 1					
	TRANSFORMER 1	TRANSFORMER 2	TRANSFORMER 3	TRANSFORMER 4	TRANSFORMER 5	TRANSFORMER 6
YELLOW TERMINAL	PPC1-00-YEL	PPC1-01-YEL	PPC1-02-YEL	PPC1-03-YEL	PPC1-04-YEL	PPC1-05-YEL
BROWN TERMINAL	PPC1-00-BRN	PPC1-01-BRN	PPC1-02-BRN	PPC1-03-BRN	PPC1-04-BRN	PPC1-05-BRN

PPC1 TO 480V/48V TRANSFORMERS ENCLOSURE						
ORIGINATION	PPC1	PPC1	PPC1	PPC1	PPC1	PPC1
DESTINATION	ENCLOSURE 2					
	TRANSFORMER 1	TRANSFORMER 2	TRANSFORMER 3	TRANSFORMER 4	TRANSFORMER 5	TRANSFORMER 6
YELLOW TERMINAL	PPC1-06-YEL	PPC1-07-YEL	PPC1-08-YEL	PPC1-09-YEL	PPC1-10-YEL	PPC1-11-YEL
BROWN TERMINAL	PPC1-06-BRN	PPC1-07-BRN	PPC1-08-BRN	PPC1-09-BRN	PPC1-10-BRN	PPC1-11-BRN

PPC1 TO 480V/48V TRANSFORMERS ENCLOSURE						
ORIGINATION	PPC1	PPC1	PPC1	PPC1	PPC1	PPC1
DESTINATION	ENCLOSURE 3					
	TRANSFORMER 1	TRANSFORMER 2	TRANSFORMER 3	TRANSFORMER 4	TRANSFORMER 5	TRANSFORMER 6
YELLOW TERMINAL	PPC1-12-YEL	PPC1-13-YEL	PPC1-14-YEL	PPC1-15-YEL	PPC1-16-YEL	PPC1-17-YEL
BROWN TERMINAL	PPC1-12-BRN	PPC1-13-BRN	PPC1-14-BRN	PPC1-15-BRN	PPC1-16-BRN	PPC1-17-BRN

PPC2 TO 480V/48V TRANSFORMERS ENCLOSURE						
ORIGINATION	PPC2	PPC2	PPC2	PPC2	PPC2	PPC2
DESTINATION	ENCLOSURE 4					
	TRANSFORMER 1	TRANSFORMER 2	TRANSFORMER 3	TRANSFORMER 4	TRANSFORMER 5	TRANSFORMER 6
YELLOW TERMINAL	PPC2-00-YEL	PPC2-01-YEL	PPC2-02-YEL	PPC2-03-YEL	PPC2-04-YEL	PPC2-05-YEL
BROWN TERMINAL	PPC2-00-BRN	PPC2-01-BRN	PPC2-02-BRN	PPC2-03-BRN	PPC2-04-BRN	PPC2-05-BRN

PPC2 TO 480V/48V TRANSFORMERS ENCLOSURE						
ORIGINATION	PPC2	PPC2	PPC2	PPC2	PPC2	PPC2
DESTINATION	ENCLOSURE 5					
	TRANSFORMER 1	TRANSFORMER 2	TRANSFORMER 3	TRANSFORMER 4	TRANSFORMER 5	TRANSFORMER 6
YELLOW TERMINAL	PPC2-06-YEL	PPC2-07-YEL	PPC2-08-YEL	PPC2-09-YEL	PPC2-10-YEL	PPC2-11-YEL
BROWN TERMINAL	PPC2-06-BRN	PPC2-07-BRN	PPC2-08-BRN	PPC2-09-BRN	PPC2-10-BRN	PPC2-11-BRN

PPC2 TO 480V/48V TRANSFORMERS ENCLOSURE						
ORIGINATION	PPC2	PPC2	PPC2	PPC2	PPC2	PPC2
DESTINATION	ENCLOSURE 6					
	TRANSFORMER 1	TRANSFORMER 2	TRANSFORMER 3	TRANSFORMER 4	TRANSFORMER 5	TRANSFORMER 6
YELLOW TERMINAL	PPC2-12-YEL	PPC2-13-YEL	PPC2-14-YEL	PPC2-15-YEL	PPC2-16-YEL	PPC2-17-YEL
BROWN TERMINAL	PPC2-12-BRN	PPC2-13-BRN	PPC2-14-BRN	PPC2-15-BRN	PPC2-16-BRN	PPC2-17-BRN

PPC3 TO 480V/48V TRANSFORMERS ENCLOSURE						
ORIGINATION	PPC3	PPC3	PPC3	PPC3	PPC3	PPC3
DESTINATION	ENCLOSURE 7					
	TRANSFORMER 1	TRANSFORMER 2	TRANSFORMER 3	TRANSFORMER 4	TRANSFORMER 5	TRANSFORMER 6
YELLOW TERMINAL	PPC3-00-YEL	PPC3-01-YEL	PPC3-02-YEL	PPC3-03-YEL	PPC3-04-YEL	PPC3-05-YEL
BROWN TERMINAL	PPC3-00-BRN	PPC3-01-BRN	PPC3-02-BRN	PPC3-03-BRN	PPC3-04-BRN	PPC3-05-BRN

PPC3 TO 480V/48V TRANSFORMERS ENCLOSURE						
ORIGINATION	PPC3	PPC3	PPC3	PPC3	PPC3	PPC3
DESTINATION	ENCLOSURE 8					
	TRANSFORMER 1	TRANSFORMER 2	TRANSFORMER 3	TRANSFORMER 4	TRANSFORMER 5	TRANSFORMER 6
YELLOW TERMINAL	PPC3-06-YEL	PPC3-07-YEL	PPC3-08-YEL	PPC3-09-YEL	PPC3-10-YEL	PPC3-11-YEL
BROWN TERMINAL	PPC3-06-BRN	PPC3-07-BRN	PPC3-08-BRN	PPC3-09-BRN	PPC3-10-BRN	PPC3-11-BRN

BRIAN JEROME GARLAND
REGISTERED ENGINEER
AGRICULTURE
No. 119330
STATE OF TENNESSEE

DEVELOPMENT ONE, INC.
1611 East Fourth Street, Suite 250
Santa Ana, California 92701
J.Bruce Camino, Architect, AIA, NCARB
(714) 689-0298
(714) 648-0197 FAX

DATE	SYM	REVISION	BY	A'PD
10/19/09		100% FINAL DESIGN		

NATIONAL AERONAUTICS AND SPACE ADMINISTRATION
DRYDEN FLIGHT RESEARCH CENTER
EDWARDS, CA

DRAWING TITLE
480VAC POWER SYSTEM
TYPE-C TRANSFORMERS ENCLOSURE
CABLE SCHEDULE

PROJECT TITLE
REPAIR BUILDING 4820 FLIGHT LOADS LABORATORY
POWER CONTROL UPGRADE

APPROVALS	DATE
Chief, Facilities Engineering & Asset Mgmt. Office	6-2-10
Project Engineer	5.13.10
Security Office	5/25/10
Project Inspector	5.17.10
Safety Office	6-1-10
Telecom	5/26/10

DRAWN BY	M. HENNIGH	DATE STRTD	09/17/08
W.O. #	95099	DATE PRNTD	04/26/10
PLOT SCALE		TRADE SH. No.	E-019
CAD FILE NAME			

SHEET No. 33 of 125

PANEL PP1

208Y120VOLT, 3 PHASE, 4 WIRE, 225 MCB — 10,000 AIC RATED

LOAD IDENTIFICATION	WATTS/PHASE A	WATTS/PHASE B	WATTS/PHASE C	BKR SIZE	CKT NO	PHASE	CKT NO	BKR SIZE	WATTS/PHASE A	WATTS/PHASE B	WATTS/PHASE C	LOAD IDENTIFICATION
PCC A1	2520			30	1	A	2	30	2520			PCC B1
PCC A2		2520		30	3	B	4	30		2520		PCC B2
PCC A3			2520	30	5	C	6	30			2520	PCC B3
PCC A4	2520			30	7	A	8	30	2520			PCC B4
PCC A5		2520		30	9	B	10	30		2520		PCC B5
PCC C1			2520	30	11	C	12	30			2520	PCC B6
PCC C2	2520			30	13	A	14	20	1400			UI PATCH PANEL
PCC C3		2520		30	15	B	16	20		1500		HMI ENCLOSURE
					17	C	18					
					19	A	20					
					21	B	22					
					23	C	24					
					25	A	26					
					27	B	28					
					29	C	30					

	PHASE A	14000 WATTS
	PHASE B	14100 WATTS
	PHASE C	10080 WATTS
	TOTAL	38180 WATTS
0.8	DEMAND	30544 WATTS

BRIAN JEROME GARLAND
REGISTERED ENGINEER
AGRICULTURE
No. 113301
STATE OF TENNESSEE

DEVELOPMENT ONE, INC.
1611 East Fourth Street, Suite 250
Santa Ana, California 92701
J.Bruce Camino, Architect, AIA, NCARB
(714) 689-0298
(714) 648-0197 FAX

DATE	SYM	REVISION	BY	A'PD
10/19/09		100% FINAL DESIGN		

NATIONAL AERONAUTICS AND SPACE ADMINISTRATION
DRYDEN FLIGHT RESEARCH CENTER
EDWARDS, CA

DRAWING TITLE
PCC 120VAC
PANEL SCHEDULE

PROJECT TITLE
REPAIR BUILDING 4820 FLIGHT LOADS LABORATORY
POWER CONTROL UPGRADE

APPROVALS	DATE
Chief Facilities Engineering & Asset Mgmt. Office	6-2-10
Project Manager	5.13.10
Security Office	5/25/10
Project Requestor	5-17-10
Safety Office	6-1-10
Telecom	5/21/10

DRAWN BY	M. HENNIGH	DATE STR'D	09/17/08
W.O. #	95099	DATE PRN'D	04/26/10
PLOT SCALE		TRADE SH. No.	E-020
CAD FILE NAME			

SHEET No. 34 of 125

NOTES:

1. THIS DRAWING SHOWS THE SCHEMATIC FOR PCC TYPE A AND B. SEE SINGLE LINE DIAGRAM ON DRAWING E-004 FOR NUMBER OF CHANNELS PER CABINET.
2. ALL FUSES FOR PCC TYPE A WILL BE 250A AND ALL FUSES FOR PCC TYPE B WILL BE 125A.
3. ALL WIRING UNLESS OTHERWISE NOTED WILL BE ERIFLEX FLEXIBAR #505502 FOR TYPE A CABINETS AND ERIFLEX #505051 FOR TYPE B CABINETS.
4. DASHED LINES INDICATE FIELD WIRING.

5 ROUTE BOTH INCOMING & OUTGOING WIRES THROUGH CT.

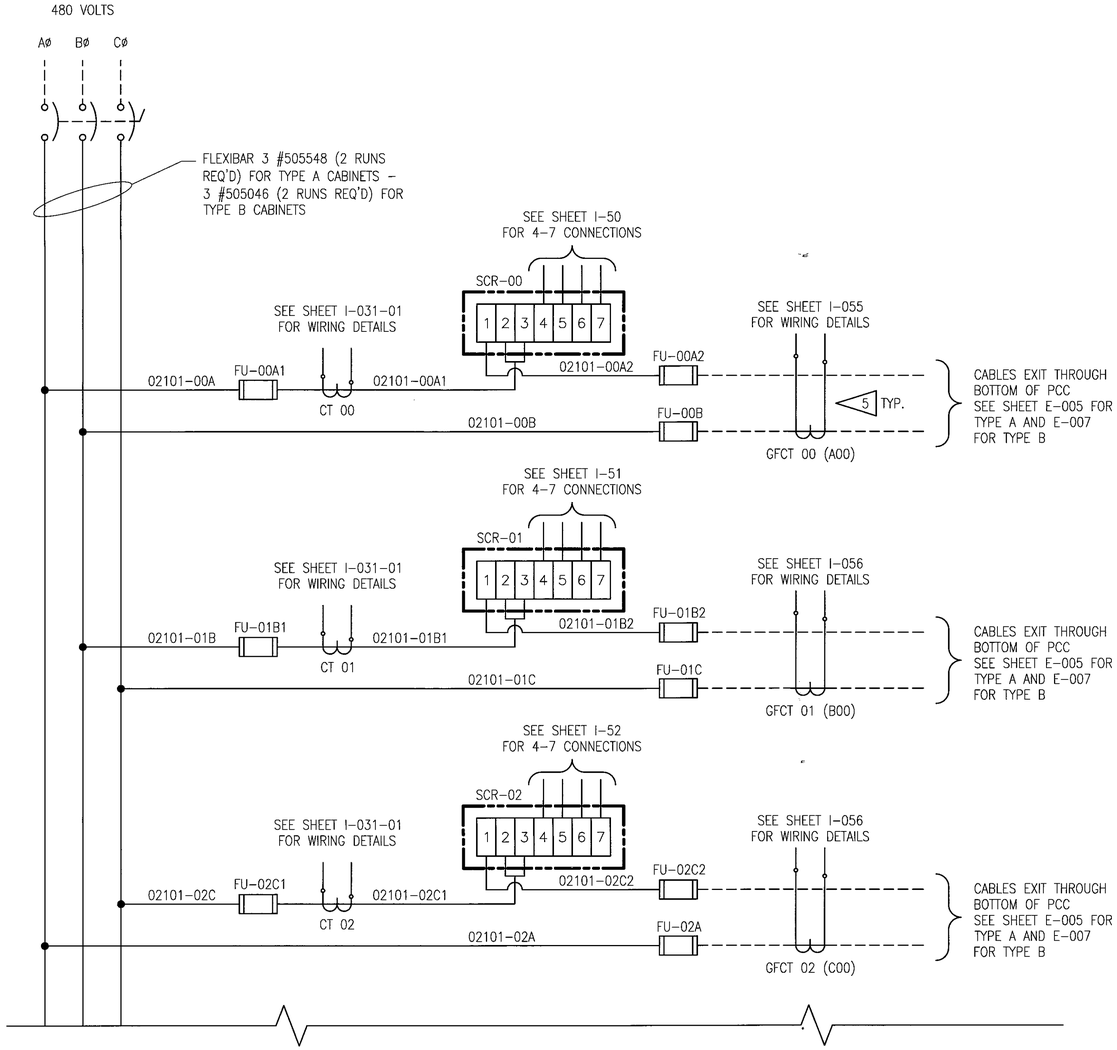

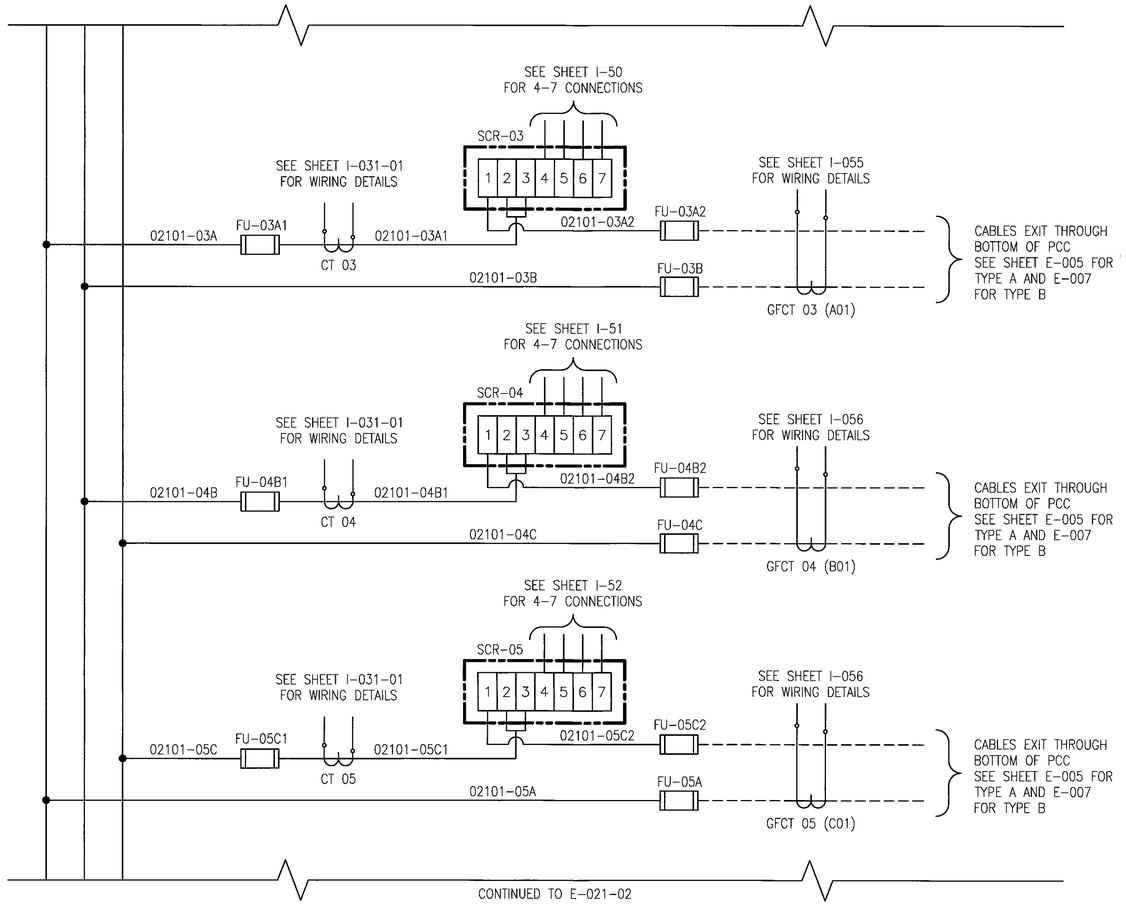

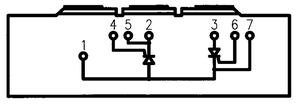

TYPICAL SCR

1 – OUTGOING LINE
2 – INCOMING LINE
3 – INCOMING LINE
4 – G1
5 – K1
6 – G2
7 – K2

BRIAN JEROME GARLAND REGISTERED ENGINEER AGRICULTURE STATE OF TENNESSEE

DEVELOPMENT ONE, INC.
1611 East Fourth Street, Suite 250
Santa Ana, California 92701
J.Bruce Camino, Architect, AIA, NCARB
(714) 689-0298
(714) 648-0197 FAX

DATE	SYM	REVISION	BY	A'PD
10/19/09		100% FINAL DESIGN		

NATIONAL AERONAUTICS AND SPACE ADMINISTRATION
DRYDEN FLIGHT RESEARCH CENTER
EDWARDS, CA

DRAWING TITLE
480VAC POWER SYSTEM
PCC TYPE A AND B
TYPICAL SCHEMATIC (SHEET 1)

PROJECT TITLE
REPAIR BUILDING 4820 FLIGHT LOADS LABORATORY
POWER CONTROL UPGRADE

APPROVALS	DATE
Chief, Facilities Engineering & Asset Mgmt. Office	6-2-10
Project Manager	5-13-10
Security Office	5/25/10
Project Requestor	5-17-10
Safety Office	6-1-10
Telecom	5/24/10

DRAWN BY	M. HENNIGH	DATE STRTD	09/17/08
W.O. #	95099	DATE PRNTD	04/26/10
PLOT SCALE		TRADE SH. No.	E-021-01
CAD FILE NAME			SHEET No. 35 of 125

NOTES:

1. THIS DRAWING SHOWS THE SCHEMATIC FOR PCC TYPE A AND B. SEE SINGLE LINE DIAGRAM ON DRAWING E-004 FOR NUMBER OF CHANNELS PER CABINET.
2. ALL FUSES FOR PCC TYPE A WILL BE 250A AND ALL FUSES FOR PCC TYPE B WILL BE 125A.
3. ALL WIRING UNLESS OTHERWISE NOTED WILL BE ERIFLEX FLEXIBAR #505502 FOR TYPE A CABINETS AND ERIFLEX #505051 FOR TYPE B CABINETS.
4. DASHED LINES INDICATE FIELD WIRING.

5 ROUTE BOTH INCOMING & OUTGOING WIRES THROUGH CT.

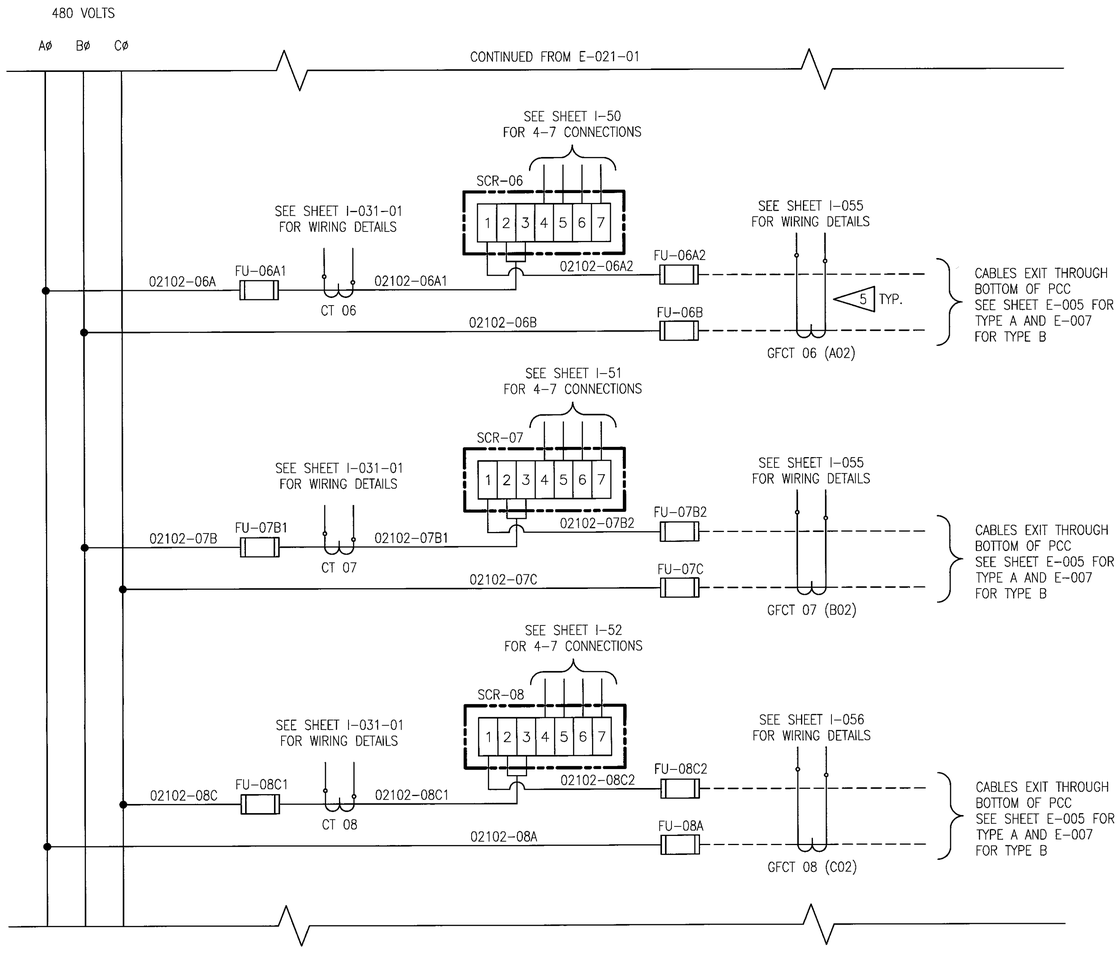

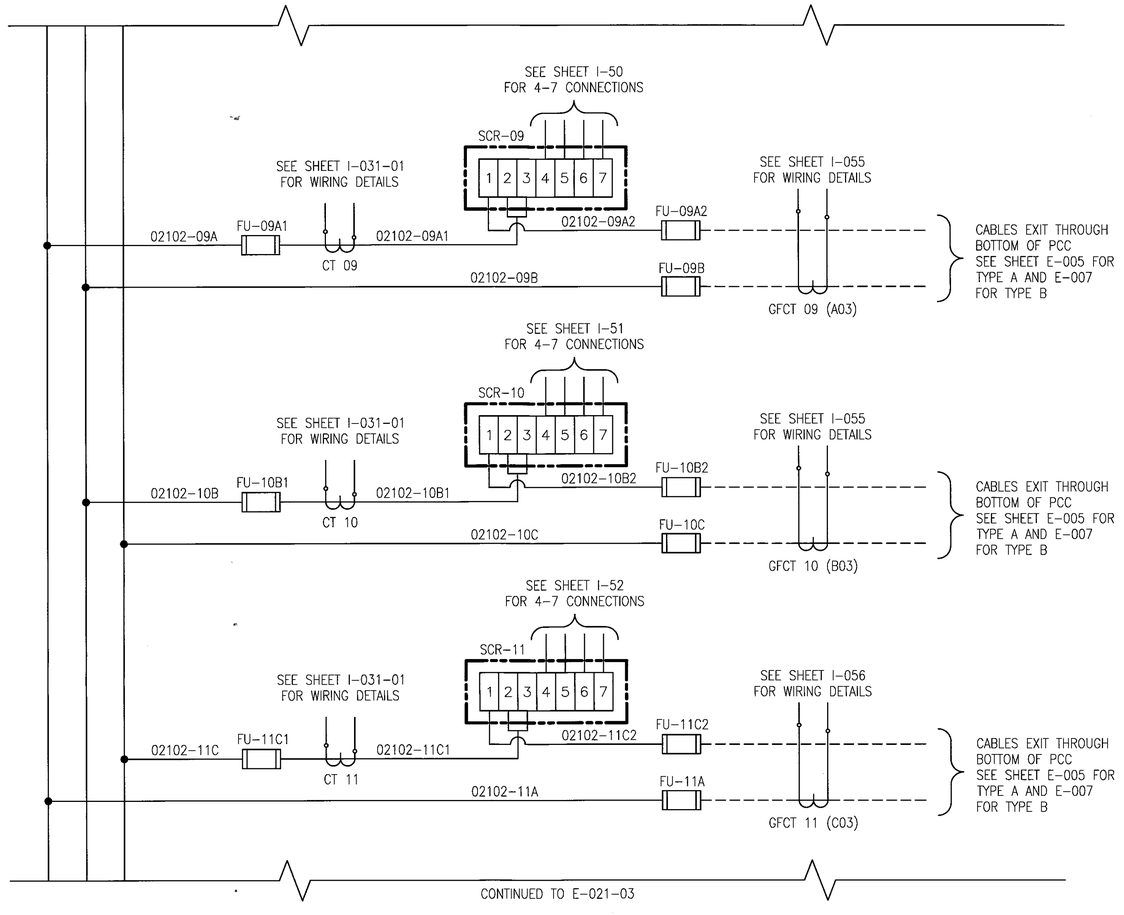

DEVELOPMENT ONE, INC.
1611 East Fourth Street, Suite 250
Santa Ana, California 92701
J.Bruce Camino, Architect, AIA, NCARB
(714) 689-0298
(714) 648-0197 FAX

DATE	SYM	REVISION	BY	A'PD
10/19/09		100% FINAL DESIGN		

NATIONAL AERONAUTICS AND SPACE ADMINISTRATION
DRYDEN FLIGHT RESEARCH CENTER
EDWARDS, CA

DRAWING TITLE
480VAC POWER SYSTEM
PCC TYPE A AND B
TYPICAL SCHEMATIC (SHEET 2)

PROJECT TITLE
REPAIR BUILDING 4820 FLIGHT LOADS LABORATORY
POWER CONTROL UPGRADE

APPROVALS	DATE
Chief Facilities Engineering & Asset Mgmt. Office	6-2-10
Project Manager	5-13-10
Security Office	5/25/10
Project Regulator	5-17-10
Safety Office	6-1-10
Telecom.	5/26/10

DRAWN BY	M. HENNIGH	DATE STRTD	09/17/08
W.O. #	95099	DATE PRNTD	04/26/10
PLOT SCALE		TRADE Sht. No.	E-021-02
CAD FILE NAME			SHEET No. 36 of 125

NOTES:

1. THIS DRAWING SHOWS THE SCHEMATIC FOR PCC TYPE A AND B. SEE SINGLE LINE DIAGRAM ON DRAWING E-004 FOR NUMBER OF CHANNELS PER CABINET.
2. ALL FUSES FOR PCC TYPE A WILL BE 250A AND ALL FUSES FOR PCC TYPE B WILL BE 125A.
3. ALL WIRING UNLESS OTHERWISE NOTED WILL BE ERIFLEX FLEXIBAR #505502 FOR TYPE A CABINETS AND ERIFLEX #505051 FOR TYPE B CABINETS.
4. DASHED LINES INDICATE FIELD WIRING.

5 ROUTE BOTH INCOMING & OUTGOING WIRES THROUGH CT.

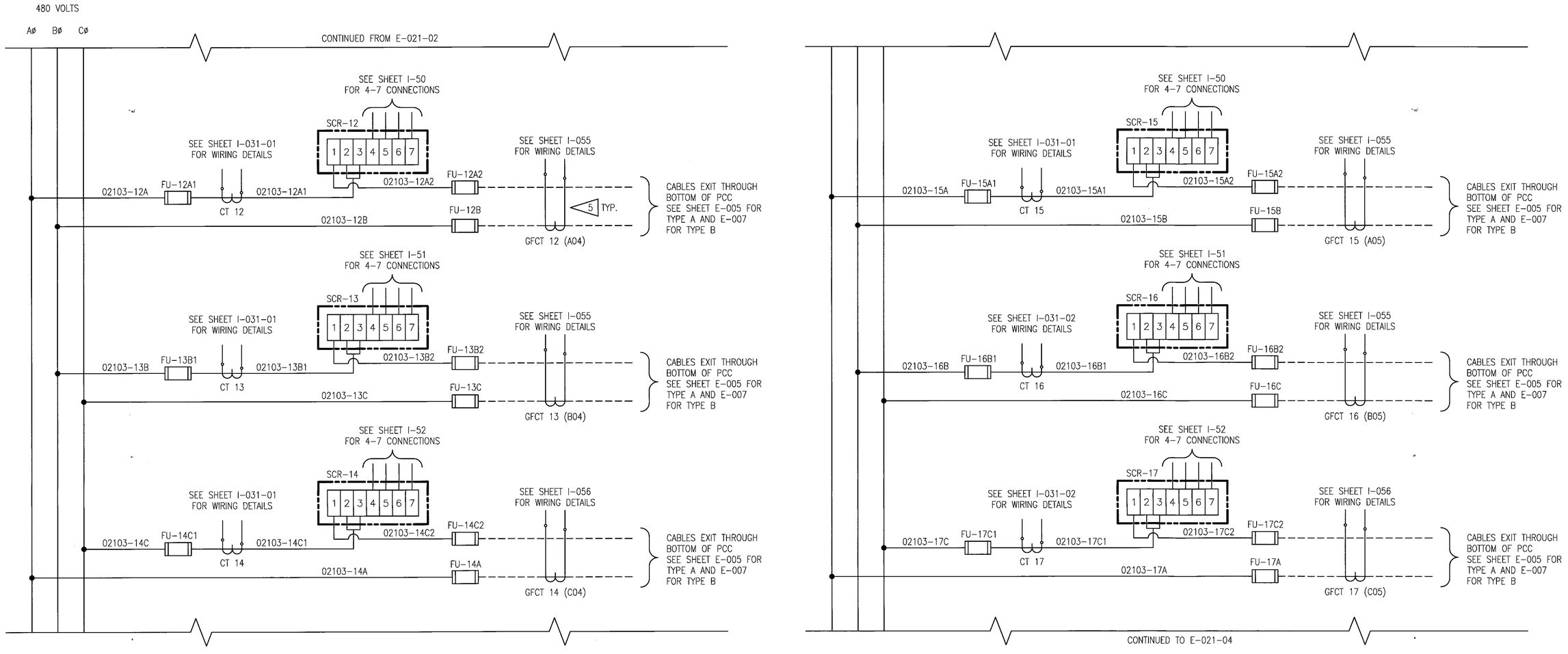

DEVELOPMENT ONE, INC.
1611 East Fourth Street, Suite 250
Santa Ana, California 92701
J.Bruce Camino, Architect, AIA, NCARB
(714) 689-0298
(714) 648-0197 FAX

DATE	SYM	REVISION	BY	A'PD
10/19/09		100% FINAL DESIGN		

NATIONAL AERONAUTICS AND SPACE ADMINISTRATION
DRYDEN FLIGHT RESEARCH CENTER
EDWARDS, CA

DRAWING TITLE
480VAC POWER SYSTEM
PCC TYPE A AND B
TYPICAL SCHEMATIC (SHEET 3)

PROJECT TITLE
REPAIR BUILDING 4820 FLIGHT LOADS LABORATORY
POWER CONTROL UPGRADE

APPROVALS	DATE
Chief, Facilities Engineering & Asset Mgmt. Office	6-2-10
Project Manager	6-3-10
Security Office	5/25/10
Project Requestor	5/17/10
Safety Office	6-1-10
Telecom	5/26/10

DRAWN BY	M. HENNIGH	DATE STRTD	09/17/08
W.O. #	95099	DATE PRNTD	04/26/10
PLOT SCALE		TRADE Sht. No.	E-021-03
CAD FILE NAME			SHEET No. 37 of 125

NOTES:

1. THIS DRAWING SHOWS THE SCHEMATIC FOR PCC TYPE A AND B. SEE SINGLE LINE DIAGRAM ON DRAWING E-004 FOR NUMBER OF CHANNELS PER CABINET.
2. ALL FUSES FOR PCC TYPE A WILL BE 250A AND ALL FUSES FOR PCC TYPE B WILL BE 125A.
3. ALL WIRING UNLESS OTHERWISE NOTED WILL BE ERIFLEX FLEXIBAR #505502 FOR TYPE A CABINETS AND ERIFLEX #505051 FOR TYPE B CABINETS.
4. DASHED LINES INDICATE FIELD WIRING.

5 ROUTE BOTH INCOMING & OUTGOING WIRES THROUGH CT.

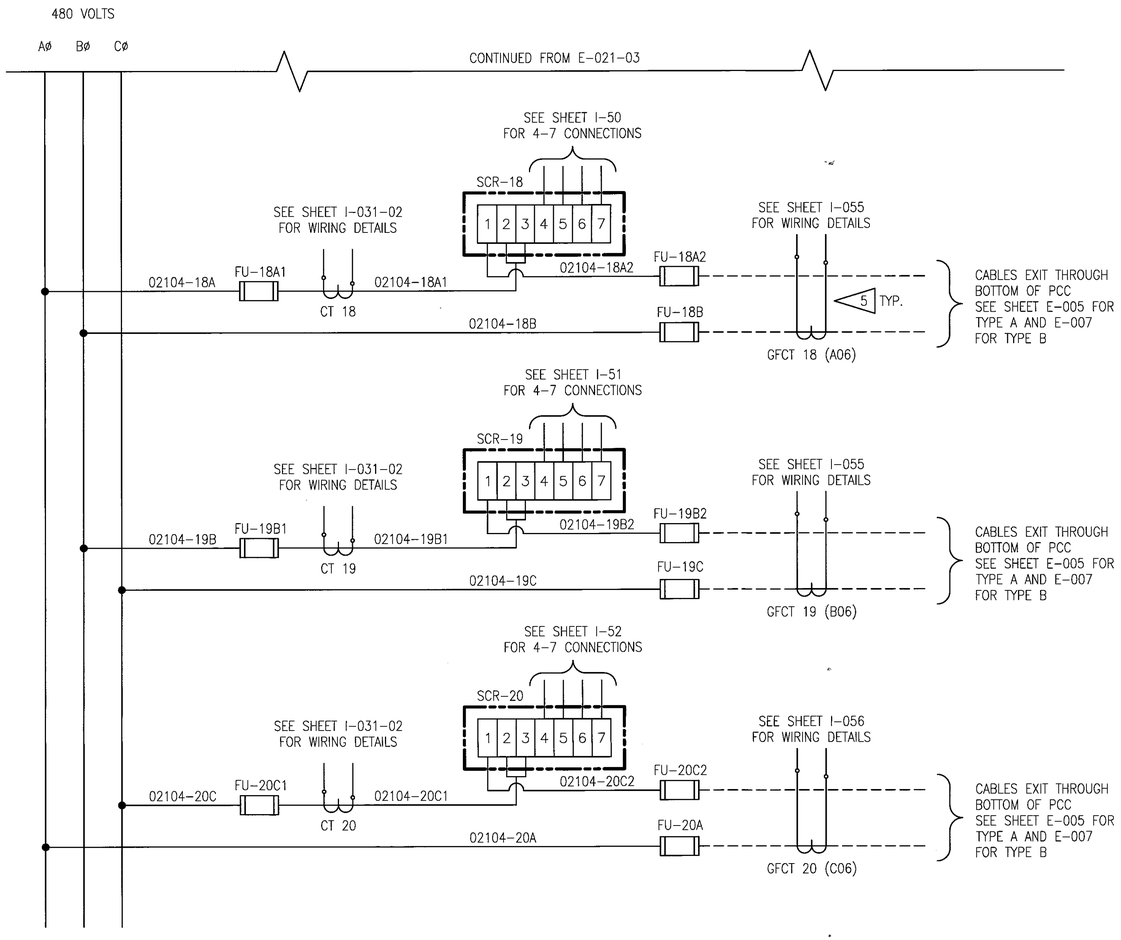

DEVELOPMENT ONE, INC.
1611 East Fourth Street, Suite 250
Santa Ana, California 92701
J.Bruce Camino, Architect, AIA, NCARB
(714) 689-0298
(714) 648-0197 FAX

DATE	SYM	REVISION	BY	A'PD
10/19/09		100% FINAL DESIGN		

NATIONAL AERONAUTICS AND SPACE ADMINISTRATION
DRYDEN FLIGHT RESEARCH CENTER
EDWARDS, CA

DRAWING TITLE
480VAC POWER SYSTEM
PCC TYPE A AND B
TYPICAL SCHEMATIC (SHEET 4)

PROJECT TITLE
REPAIR BUILDING 4820 FLIGHT LOADS LABORATORY
POWER CONTROL UPGRADE

APPROVALS	DATE
Chief, Facilities Engineering & Asset Mgmt. Office	6-2-10
Project Manager	5.13.10
Safety Office	5/25/10
Project Requestor	5.17.10
Safety Office	6-1-10
Telecom	5/26/10

DRAWN BY	M. HENNIGH	DATE STRTD	09/17/08
W.O. #	95099	DATE PRNTD	04/26/10
PLOT SCALE		TRADE Sht. No.	E-021-04
CAD FILE NAME			SHEET No. 38 of 125

NOTES:

1. THIS DRAWING SHOWS THE SCHEMATIC FOR PCC TYPE C. SEE SINGLE LINE DIAGRAM ON DRAWING E-004 FOR NUMBER OF CHANNELS PER CABINET.
2. ALL WIRING UNLESS OTHERWISE NOTED WILL BE ERIFLEX FLEXIBAR #505051.
3. DASHED LINES INDICATE FIELD WIRING.

◁4 ROUTE BOTH INCOMING & OUTGOING WIRES THROUGH CT.

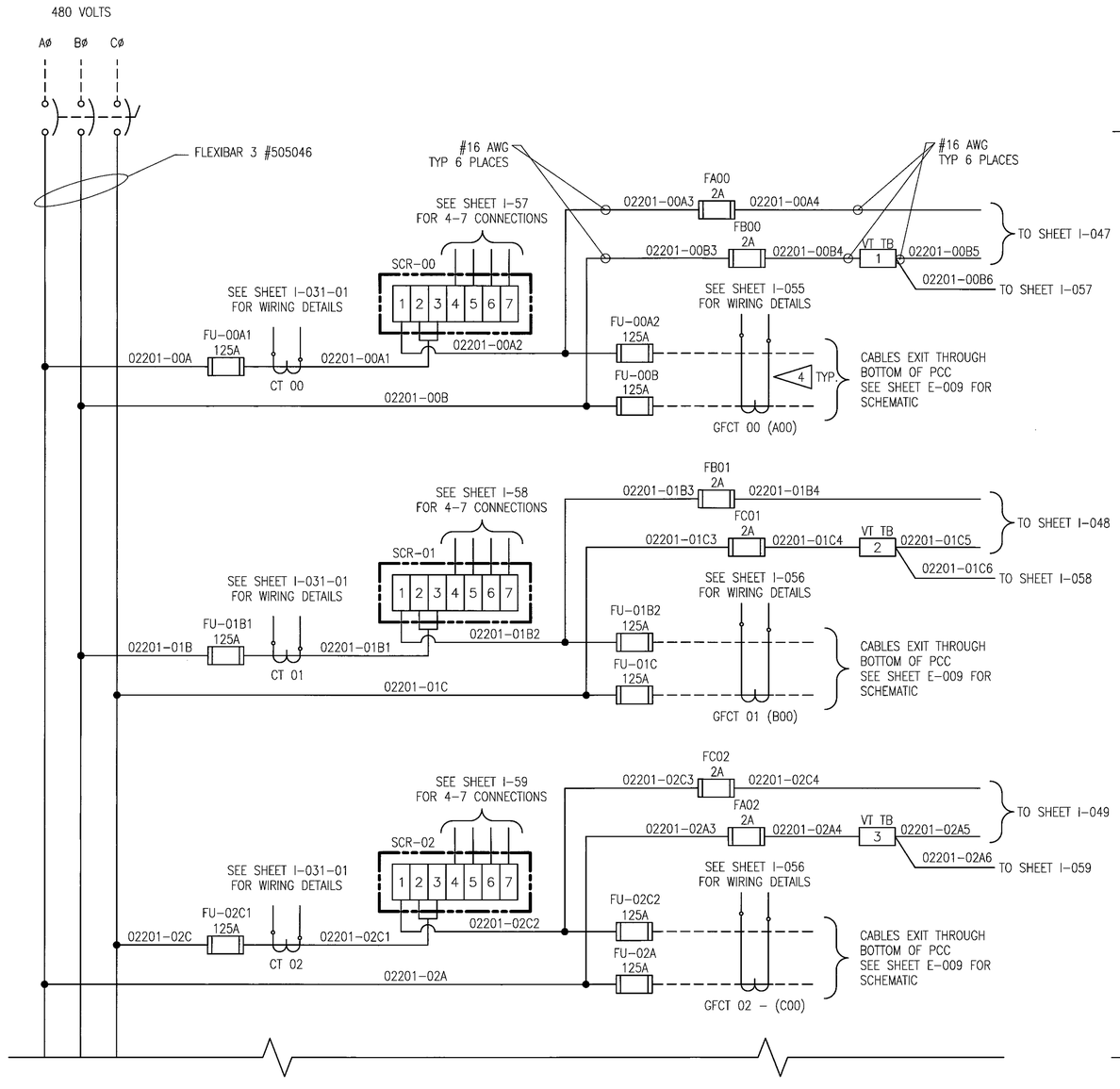

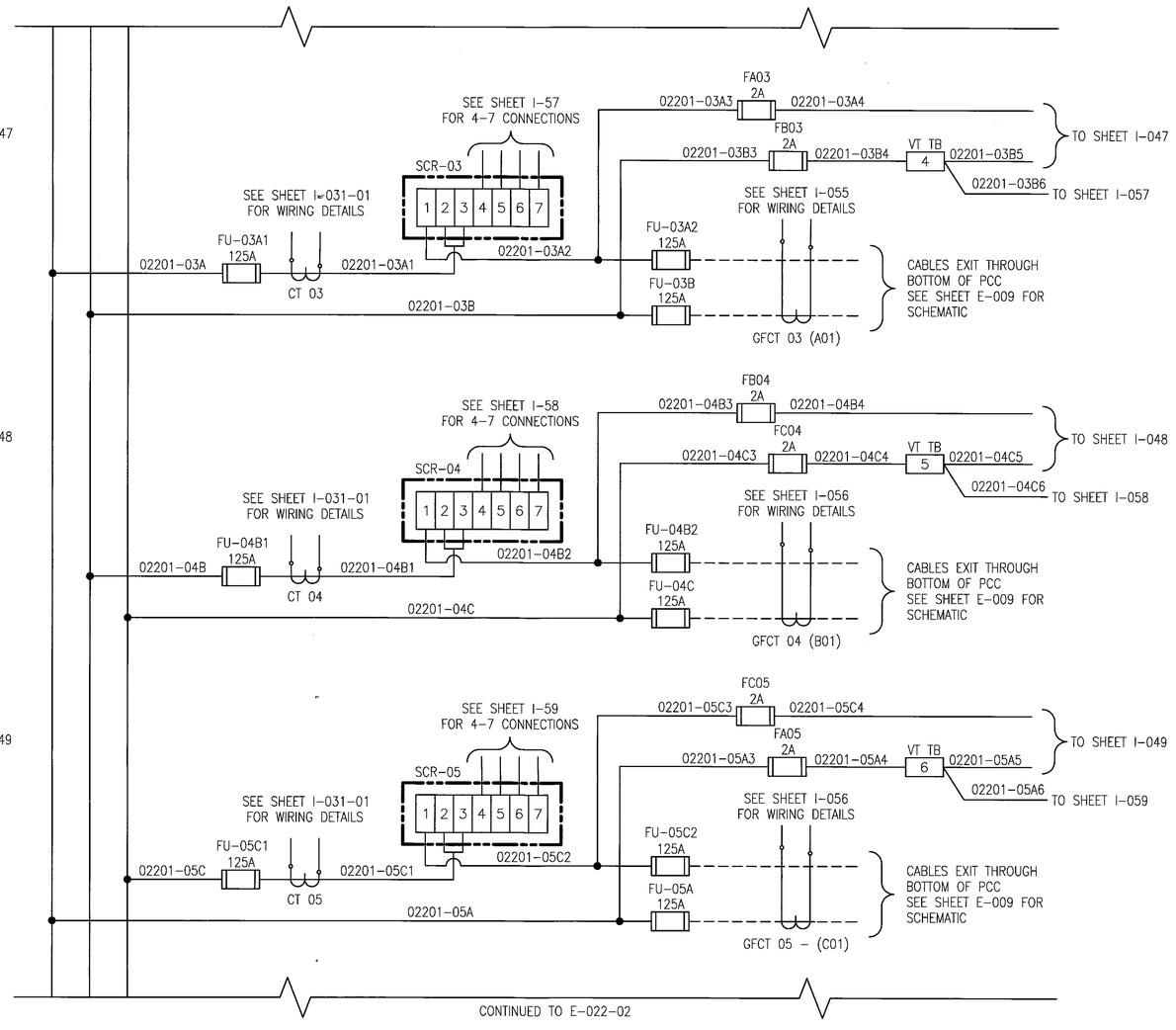

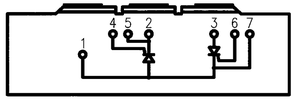

TYPICAL SCR

1-OUTGOING LINE
2-INCOMING LINE
3-INCOMING LINE
4-G1
5-K1
6-G2
7-K2

BRIAN JEROME GARLAND REGISTERED ENGINEER AGRICULTURE No. 113930 STATE OF TENNESSEE

DEVELOPMENT ONE, INC.
1611 East Fourth Street, Suite 250
Santa Ana, California 92701
J.Bruce Camino, Architect, AIA, NCARB
(714) 689-0298
(714) 648-0197 FAX

DATE	SYM	REVISION	BY	A'PD
10/19/09		100% FINAL DESIGN		

NATIONAL AERONAUTICS AND SPACE ADMINISTRATION
DRYDEN FLIGHT RESEARCH CENTER
EDWARDS, CA

DRAWING TITLE
480VAC POWER SYSTEM
PCC TYPE C
TYPICAL SCHEMATIC (SHEET 1)

PROJECT TITLE
REPAIR BUILDING 4820 FLIGHT LOADS LABORATORY
POWER CONTROL UPGRADE

APPROVALS	DATE
Chief, Facilities Engineering & Asset Mgmt. Office	6-2-10
Project Manager	5.13.10
Safety Office	5/25/10
Project Engineer	5-17-10
Safety Office	6-1-10
Telecom	5/24/10

DRAWN BY	M. HENNIGH	DATE STRTD	09/17/08
W.O. #	95099	DATE PRNTD	04/26/10
PLOT SCALE		TRADE SN. No.	E-022-01
CAD FILE NAME			SHEET No. 39 of 125

NOTES:

1. THIS DRAWING SHOWS THE SCHEMATIC FOR PCC TYPE C. SEE SINGLE LINE DIAGRAM ON DRAWING E-004 FOR NUMBER OF CHANNELS PER CABINET.
2. ALL WIRING UNLESS OTHERWISE NOTED WILL BE ERIFLEX FLEXIBAR #505051.
3. DASHED LINES INDICATE FIELD WIRING.

4 ROUTE BOTH INCOMING & OUTGOING WIRES THROUGH CT.

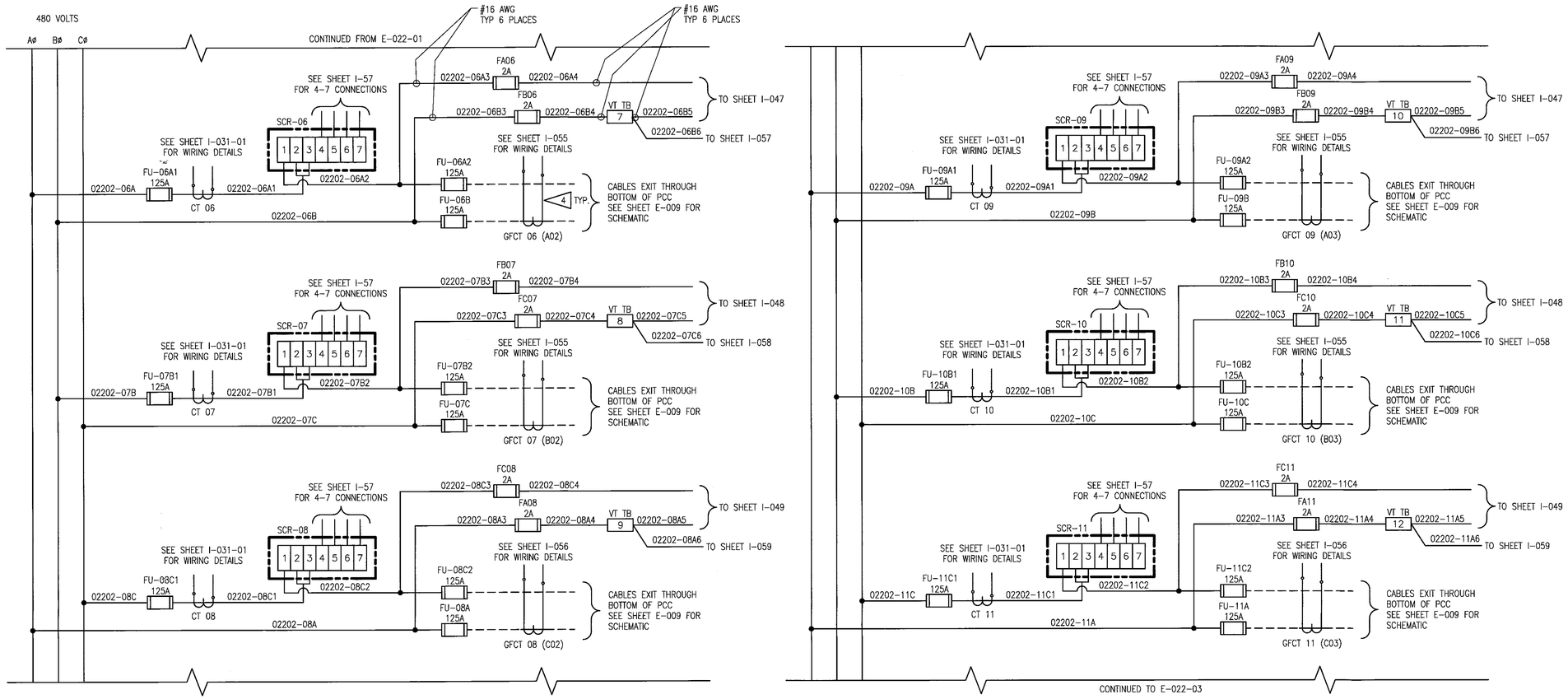

DEVELOPMENT ONE, INC.
1611 East Fourth Street, Suite 250
Santa Ana, California 92701
J.Bruce Camino, Architect, AIA, NCARB
(714) 689-0298
(714) 648-0197 FAX

BRIAN JEROME GARLAND — REGISTERED ENGINEER — AGRICULTURE — No. 113330 — STATE OF TENNESSEE

DATE	SYM	REVISION	BY	A'PD
10/19/09		100% FINAL DESIGN		

NATIONAL AERONAUTICS AND SPACE ADMINISTRATION
DRYDEN FLIGHT RESEARCH CENTER
EDWARDS, CA

DRAWING TITLE
480VAC POWER SYSTEM
PCC TYPE C
TYPICAL SCHEMATIC (SHEET 2)

PROJECT TITLE
REPAIR BUILDING 4820 FLIGHT LOADS LABORATORY
POWER CONTROL UPGRADE

APPROVALS	DATE
Chief, Facilities Engineering & Assets Mgmt. Office	6-2-10
Project Manager	5.13.10
Security Office	5/25/10
Project Requestor	5-17-10
Safety Office	6-1-10
Telecom	5/24/10

DRAWN BY	M. HENNIGH	DATE SIR'TD	09/17/08
W.O. #	95099	DATE PR'NTD	04/26/10
PLOT SCALE		TRADE SH. No.	E-022-02
CAD FILE NAME			SHEET No. 40 of 125

NOTES:

1. THIS DRAWING SHOWS THE SCHEMATIC FOR PCC TYPE C. SEE SINGLE LINE DIAGRAM ON DRAWING E-004 FOR NUMBER OF CHANNELS PER CABINET.
2. ALL WIRING UNLESS OTHERWISE NOTED WILL BE ERIFLEX FLEXIBAR #505051.
3. DASHED LINES INDICATE FIELD WIRING.

4 ROUTE BOTH INCOMING & OUTGOING WIRES THROUGH CT.

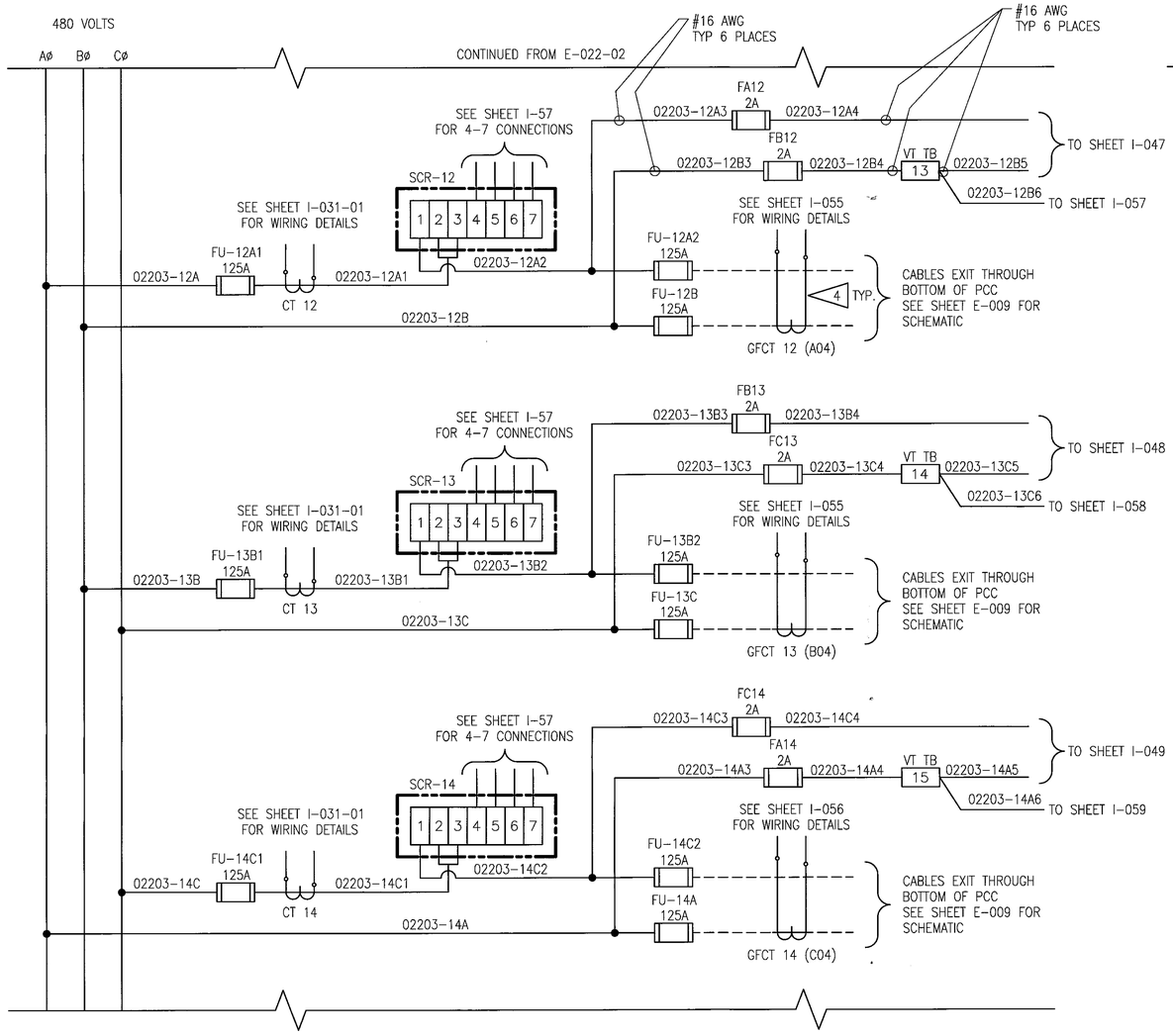

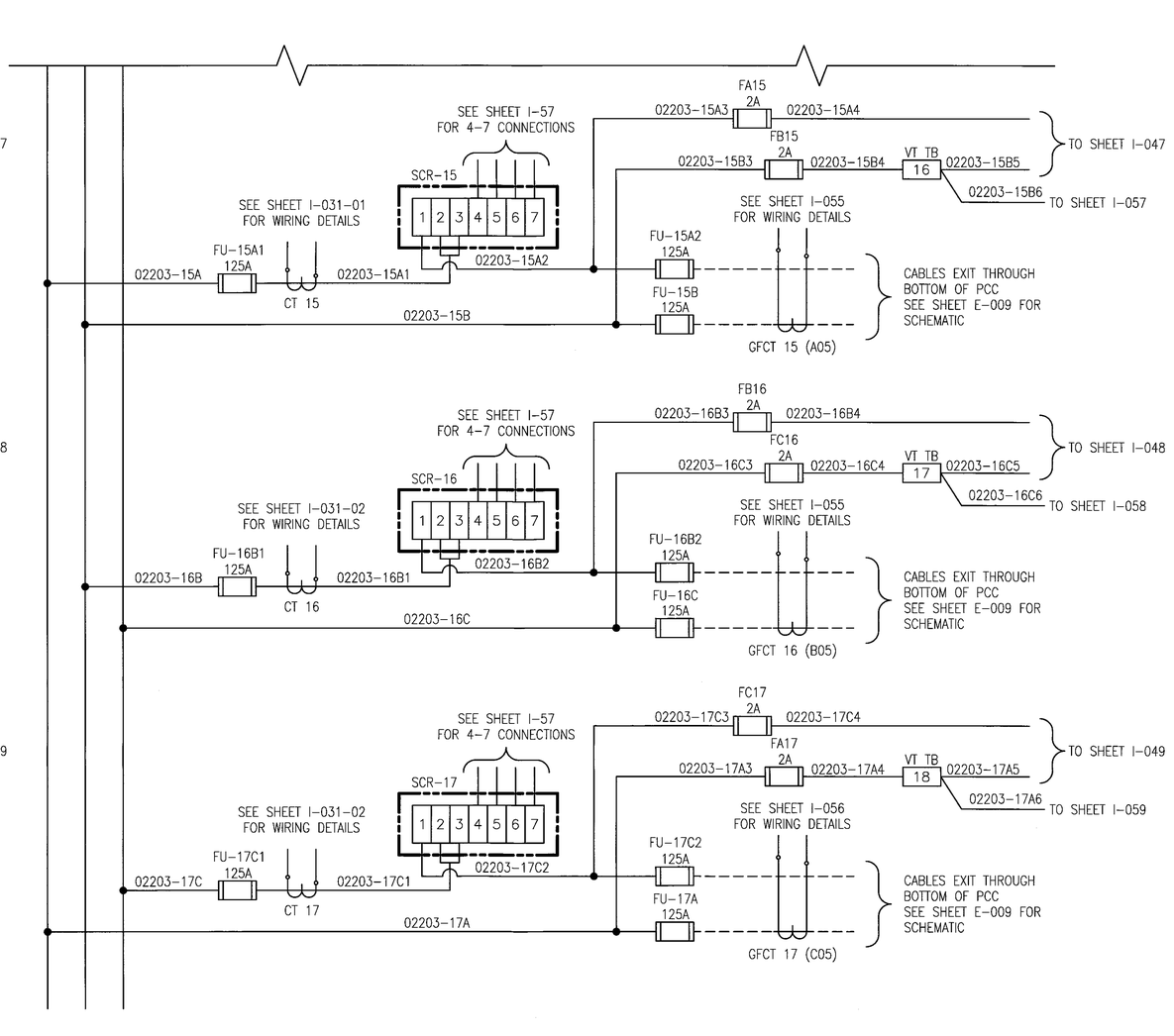

BRIAN JEROME GARLAND REGISTERED ENGINEER AGRICULTURE No. 113330 STATE OF TENNESSEE

DEVELOPMENT ONE, INC.
1611 East Fourth Street, Suite 250
Santa Ana, California 92701
J.Bruce Camino, Architect, AIA, NCARB
(714) 689-0298
(714) 648-0197 FAX

DATE	SYM	REVISION	BY	A'PD
10/19/09		100% FINAL DESIGN		

NATIONAL AERONAUTICS AND SPACE ADMINISTRATION
DRYDEN FLIGHT RESEARCH CENTER
EDWARDS, CA

DRAWING TITLE
480VAC POWER SYSTEM
PCC TYPE C
TYPICAL SCHEMATIC (SHEET 3)

PROJECT TITLE
REPAIR BUILDING 4820 FLIGHT LOADS LABORATORY
POWER CONTROL UPGRADE

APPROVALS	DATE
Chief, Facilities Engineering & Asset Mgmt. Office	6-2-10
Program Office	5.13.10
Quality Office	5/25/10
Project Manager	5-17-10
Safety Office	6-1-10
Telecom	5/26/10

DRAWN BY	M. HENNIGH	DATE STRTD	09/17/08
W.O. #	95099	DATE PRNTD	04/26/10
PLOT SCALE		TRADE SH. No.	E-022-03
CAD FILE NAME			SHEET No. 41 of 125

NOTES:

1. THIS DRAWING SHOWS THE CONTROL SCHEMATIC FOR THE PCC CIRCUIT BREAKER.
2. S1/a CLOSES WHEN BREAKER IS CLOSED.
3. BELL ALARM CONTACT CLOSES ON BREAKER TRIP.

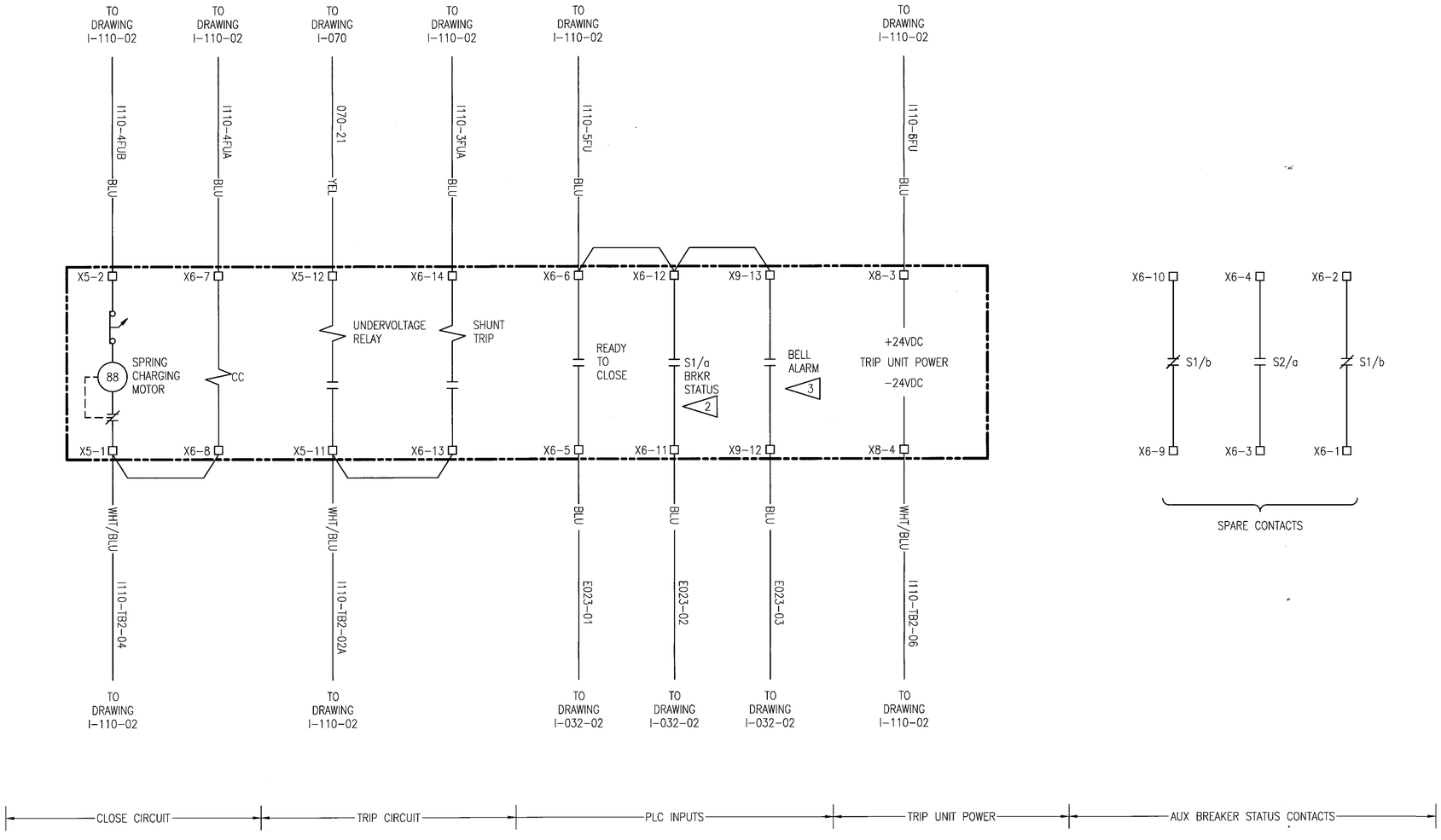

DEVELOPMENT ONE, INC.
1611 East Fourth Street, Suite 250
Santa Ana, California 92701
J.Bruce Camino, Architect, AIA, NCARB
(714) 689-0298
(714) 648-0197 FAX

DATE	SYM	REVISION	BY	A'PD
10/19/09		100% FINAL DESIGN		

NATIONAL AERONAUTICS AND SPACE ADMINISTRATION
DRYDEN FLIGHT RESEARCH CENTER
EDWARDS, CA

DRAWING TITLE
480VAC POWER SYSTEM
PCC CIRCUIT BREAKER
CONTROL SCHEMATIC

PROJECT TITLE
REPAIR BUILDING 4820 FLIGHT LOADS LABORATORY
POWER CONTROL UPGRADE

APPROVALS	DATE
Chief, Facilities Engineering & Asset Mgmt. Office	6-2-10
Project Manager	6-1-3-10
Security Office	5/25/10
Project Engineer	5-17-10
Safety Office	6-1-10
Telecom	5/24/10

DRAWN BY	M. HENNIGH	DATE STRTD	09/17/08
W.O. #	95099	DATE PRNTD	04/26/10
PLOT SCALE		TRADE SK. No.	E-023
CAD FILE NAME			SHEET No. 42 of 125

NOTES:

1. JUNCTION BOXES 2 THROUGH 10 ARE EXISTING. THE BOXES SHALL BE INSPECTED, REPAIRED AND RESEALED.
2. JUNCTION BOX (J.B.) CABLE TRAYS SHALL NOT BE LOWER THAN 10'-8" ABOVE FINISHED FLOOR UNDER MEZZANINE AREA.
3. SEE DRAWING E-050 THRU E-058 FOR CABINET TO PATCH PANEL CABLE TRAY ROUTINGS BELOW MEZZANINE.

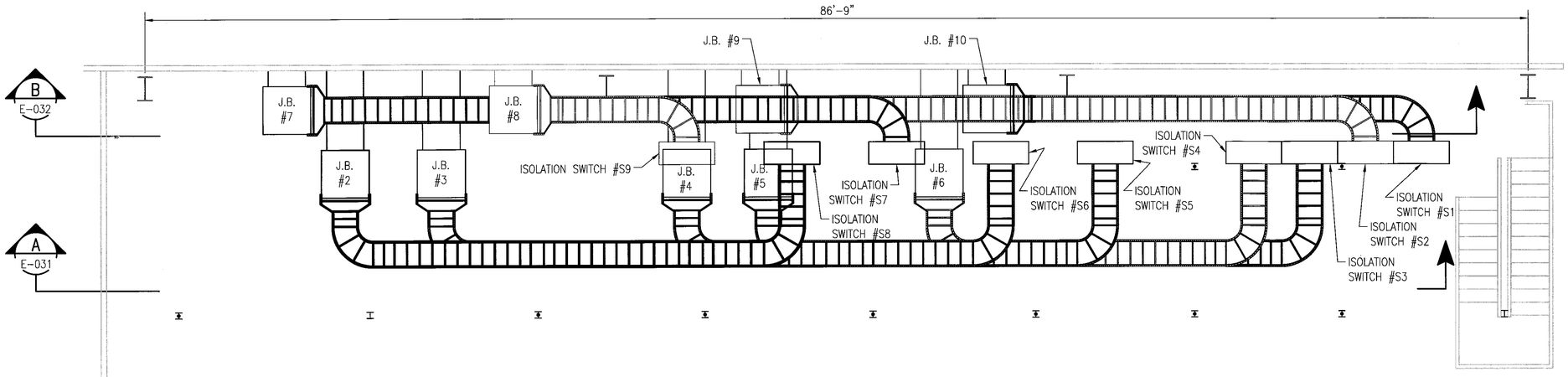

CABLE TRAY PLAN
SCALE: 1/4" = 1'-0"

BRIAN JEROME GARLAND
REGISTERED ENGINEER
AGRICULTURE
No. 113330
STATE OF TENNESSEE

DEVELOPMENT ONE, INC.
1611 East Fourth Street, Suite 250
Santa Ana, California 92701
J.Bruce Camino, Architect, AIA, NCARB
(714) 689-0298
(714) 648-0197 FAX

DATE	SYM	REVISION	BY	A'PD
10/19/09		100% FINAL DESIGN		

NATIONAL AERONAUTICS AND SPACE ADMINISTRATION
DRYDEN FLIGHT RESEARCH CENTER
EDWARDS, CA

DRAWING TITLE
480VAC CABLE TRAY
LINE SIDE
PLAN VIEW

PROJECT TITLE
REPAIR BUILDING 4820 FLIGHT LOADS LABORATORY
POWER CONTROL UPGRADE

APPROVALS	DATE
Chief Facilities Engineering & Asset Mgmt. Office	6-2-10
Project Manager	6.13.10
Security Office	5/25/10
Project Requestor	5.17.10
Safety Office	6-1-10
Telecom	5/24/10

DRAWN BY	M. HENNIGH	DATE STRTD	09/17/08
W.O. #	95099	DATE PRNTD	04/26/10
PLOT SCALE		TRADE SN. No.	E-030
CAD FILE NAME		SHEET No.	43 of 125

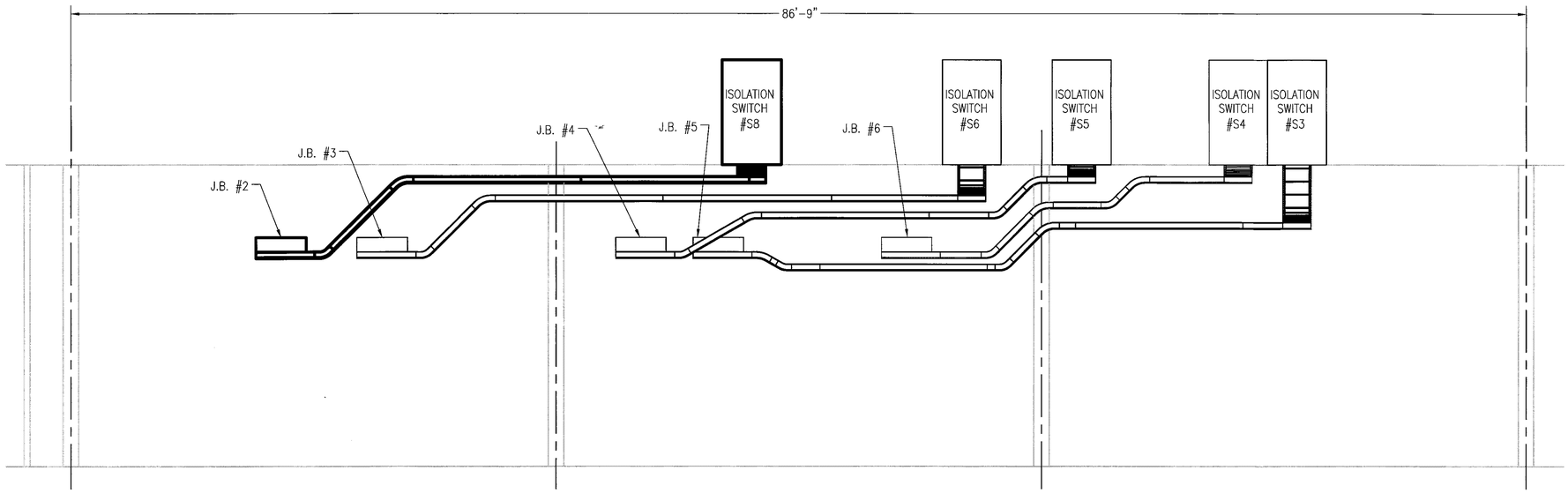

SECTION A
SCALE: 1/4"=1'-0"
E-030

BRIAN JEROME GARLAND
REGISTERED ENGINEER
AGRICULTURE
CHEMICAL
No. 113330
STATE OF TENNESSEE

DEVELOPMENT ONE, INC.
1611 East Fourth Street, Suite 250
Santa Ana, California 92701
J.Bruce Camino, Architect, AIA, NCARB
(714) 689-0298
(714) 648-0197 FAX

DATE	SYM	REVISION	BY	A'PD
10/19/09		100% FINAL DESIGN		

NATIONAL AERONAUTICS AND SPACE ADMINISTRATION
DRYDEN FLIGHT RESEARCH CENTER
EDWARDS, CA

DRAWING TITLE
480VAC CABLE TRAY
LINE SIDE
ELEVATION VIEW J.B. #2-6

PROJECT TITLE
REPAIR BUILDING 4820 FLIGHT LOADS LABORATORY
POWER CONTROL UPGRADE

APPROVALS	DATE
Chief, Facilities Engineering & Assets Mgmt. Office	6-2-10
Project Manager	5.13.10
Security Office	5/25/10
Project Requester	5.17.10
Safety Office	6-1-10
Telecom	5/26/10

DRAWN BY	M. HENNIGH	DATE STRTD	09/17/08
W.O. #	95099	DATE PRNTD	04/26/10
PLOT SCALE		TRADE SH. No.	E-031
CAD FILE NAME			

SHEET No. 44 of 125

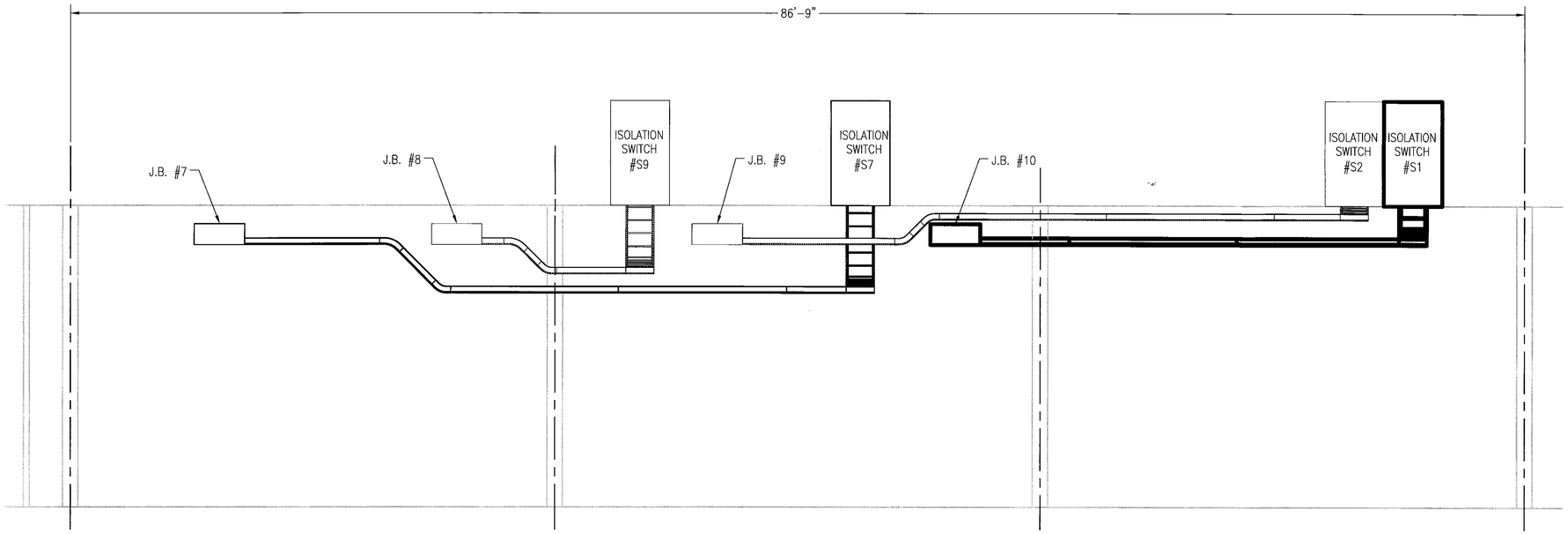

SECTION B
SCALE: 1/4"=1'-0" E-030

BRIAN JEROME GARLAND
REGISTERED ENGINEER
AGRICULTURE
ENGINEER
No. 113930
STATE OF TENNESSEE

DEVELOPMENT ONE, INC.
1611 East Fourth Street, Suite 250
Santa Ana, California 92701
J.Bruce Camino, Architect, AIA, NCARB
(714) 689-0298
(714) 648-0197 FAX

DATE	SYM	REVISION	BY	A'PD
10/19/09		100% FINAL DESIGN		

NATIONAL AERONAUTICS AND SPACE ADMINISTRATION
DRYDEN FLIGHT RESEARCH CENTER
EDWARDS, CA

DRAWING TITLE
480VAC CABLE TRAY
LINE SIDE
ELEVATION VIEW J.B. #7-10

PROJECT TITLE
REPAIR BUILDING 4820 FLIGHT LOADS LABORATORY
POWER CONTROL UPGRADE

APPROVALS	DATE
Chief, Facilities Engineering & Asset Mgmt. Office	8-2-10
Project Manager	5/13/10
Security Office	5/25/10
Project Requestor	5/17/10
Safety Office	6-1-10
Telecom	5/24/10

DRAWN BY	M. HENNIGH	DATE STRTD	09/17/08
W.O. #	95099	DATE PRNTD	04/26/10
PLOT SCALE		TRADE Sht. No.	E-032
CAD FILE NAME			SHEET No. 45 of 125

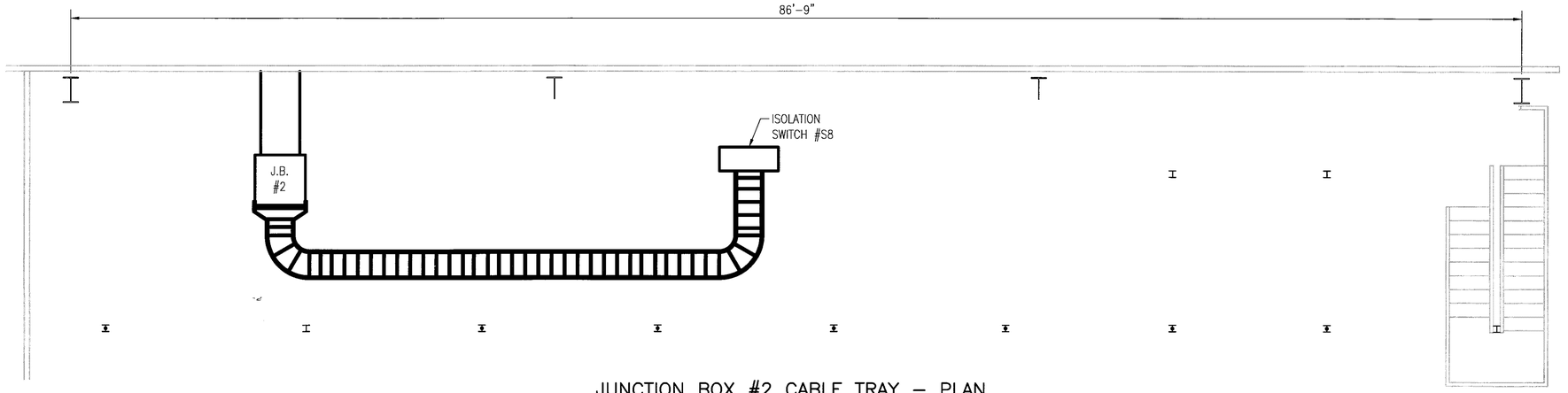

JUNCTION BOX #2 CABLE TRAY – PLAN
SCALE: 1/4" = 1'-0"

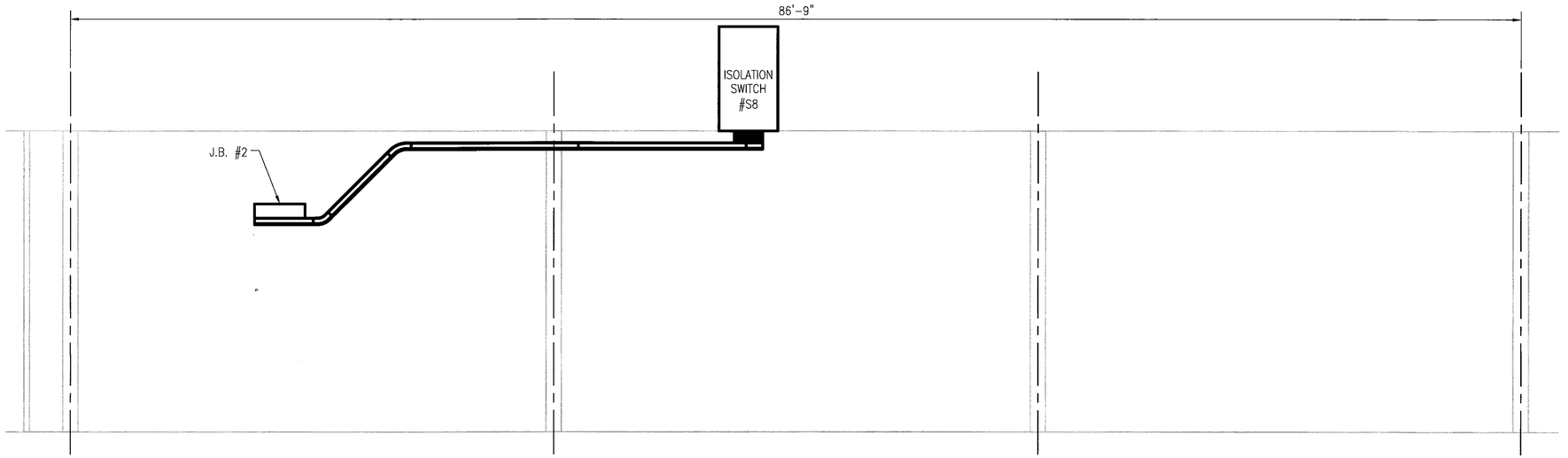

JUNCTION BOX #2 CABLE TRAY – ELEVATION
SCALE: 1/4" = 1'-0"

BRIAN JEROME GARLAND
REGISTERED ENGINEER
No. 113320
STATE OF TENNESSEE

DEVELOPMENT ONE, INC.
1611 East Fourth Street, Suite 250
Santa Ana, California 92701
J.Bruce Camino, Architect, AIA, NCARB
(714) 689-0298
(714) 648-0197 FAX

DATE	SYM	REVISION	BY	A'PD
10/19/09		100% FINAL DESIGN		

NATIONAL AERONAUTICS AND SPACE ADMINISTRATION
DRYDEN FLIGHT RESEARCH CENTER
EDWARDS, CA

DRAWING TITLE
480VAC CABLE TRAY
JUNCTION BOX #2
PLAN & ELEVATION

PROJECT TITLE
REPAIR BUILDING 4820 FLIGHT LOADS LABORATORY
POWER CONTROL UPGRADE

APPROVALS	DATE
Chief Facilities Engineering & Asset Mgmt. Office	6-2-10
Project Manager	6.13.10
Safety Office	5/25/10
Project Engineer	5.17.10
Safety Office	6-1-10
Telecom	5/24/10

DRAWN BY	M. HENNIGH	DATE STRTD	09/17/08
W.O. #	95099	DATE PRNTD	04/26/10
PLOT SCALE		TRADE Sht. No.	E-033
CAD FILE NAME			

SHEET No. 46 of 125

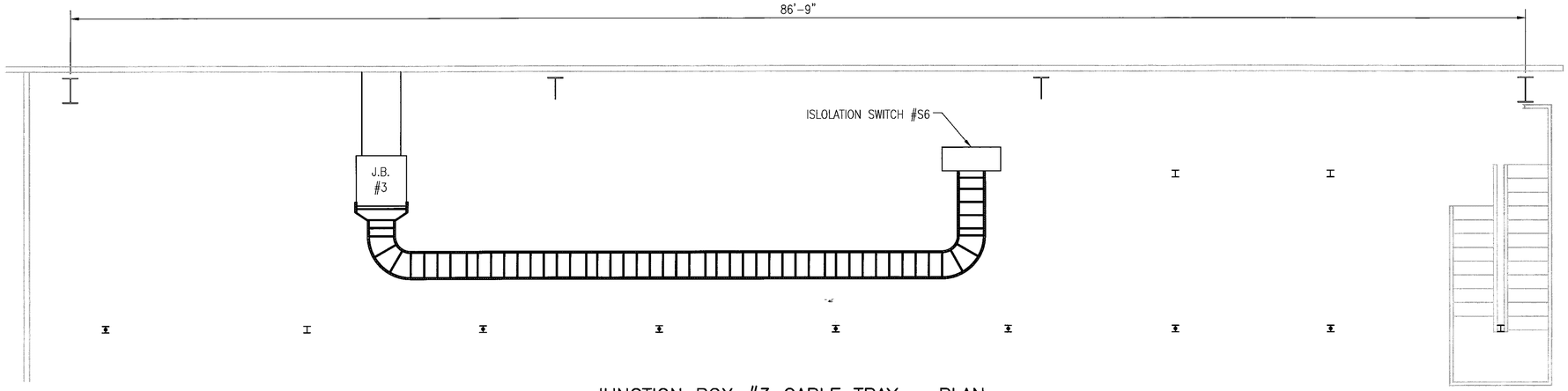

JUNCTION BOX #3 CABLE TRAY – PLAN
SCALE: 1/4" = 1'-0"

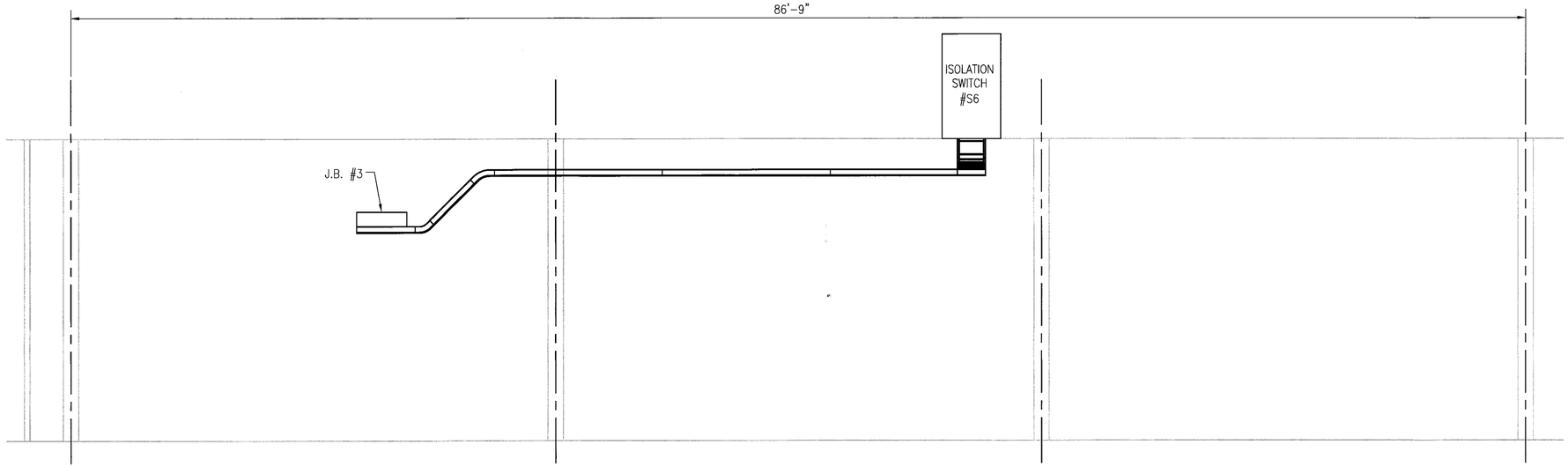

JUNCTION BOX #3 CABLE TRAY – ELEVATION
SCALE: 1/4" = 1'-0"

BRIAN JEROME GARLAND
REGISTERED ENGINEER
AGRICULTURE
No. 113350
STATE OF TENNESSEE

DEVELOPMENT ONE, INC.
1611 East Fourth Street, Suite 250
Santa Ana, California 92701
J.Bruce Camino, Architect, AIA, NCARB
(714) 689-0298
(714) 648-0197 FAX

DATE	SYM	REVISION	BY	A'PD
10/19/09		100% FINAL DESIGN		

NATIONAL AERONAUTICS AND SPACE ADMINISTRATION
DRYDEN FLIGHT RESEARCH CENTER
EDWARDS, CA

DRAWING TITLE
480VAC CABLE TRAY
JUNCTION BOX #3
PLAN & ELEVATION

PROJECT TITLE
REPAIR BUILDING 4820 FLIGHT LOADS LABORATORY
POWER CONTROL UPGRADE

APPROVALS	DATE
Chief, Facilities Engineering & Asset Mgmt. Office	5-27-10
Project Manager	5.13.10
Safety Office	5/25/10
Project Manager	5-17-10
Safety Office	6-1-10
Telecom	5/24/10

DRAWN BY	M. HENNIGH	DATE STRTD	09/17/08
W.O. #	95099	DATE PRNTD	04/26/10
PLOT SCALE		TRADE SH. No.	E-034
CAD FILE NAME			

SHEET No. 47 of 125

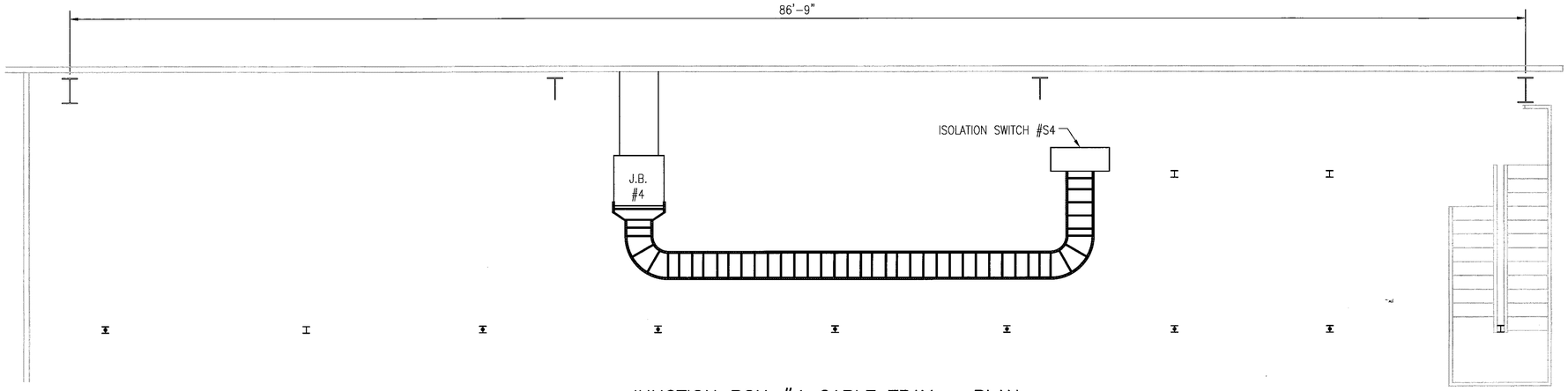

JUNCTION BOX #4 CABLE TRAY – PLAN
SCALE: 1/4" = 1'-0"

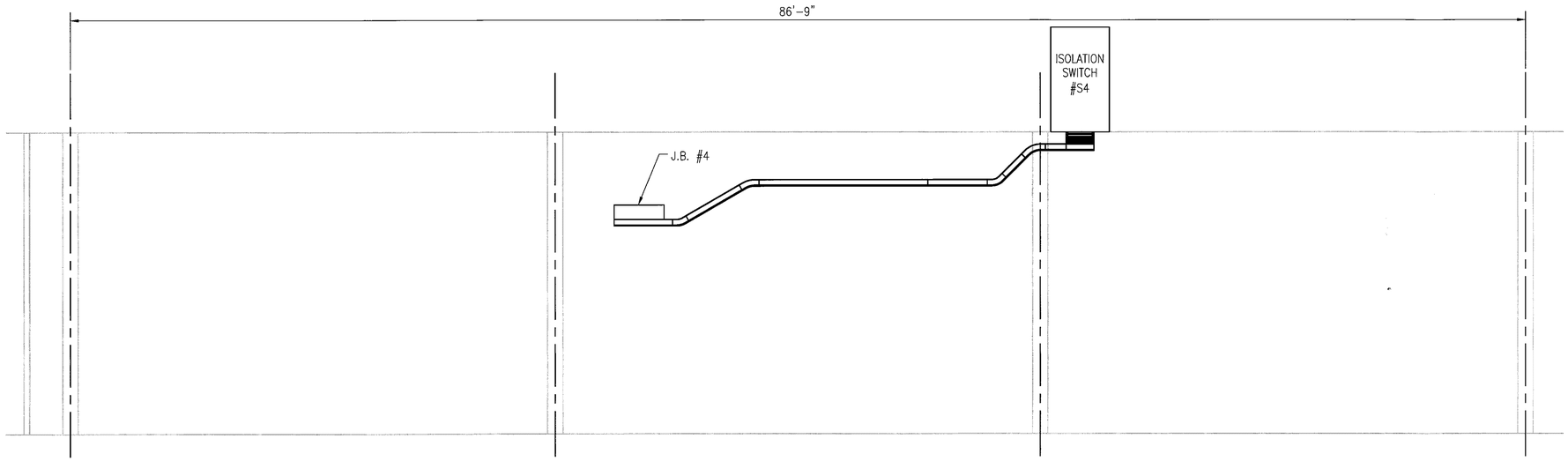

JUNCTION BOX #4 CABLE TRAY – ELEVATION
SCALE: 1/4" = 1'-0"

BRIAN JEROME GARLAND
REGISTERED ENGINEER
AGRICULTURE
No. 113358
STATE OF TENNESSEE

DEVELOPMENT ONE, INC.
1611 East Fourth Street, Suite 250
Santa Ana, California 92701
J.Bruce Camino, Architect, AIA, NCARB
(714) 689-0298
(714) 648-0197 FAX

DATE	SYM	REVISION	BY	A'PD
10/19/09		100% FINAL DESIGN		

NATIONAL AERONAUTICS AND SPACE ADMINISTRATION
DRYDEN FLIGHT RESEARCH CENTER
EDWARDS, CA

DRAWING TITLE
480VAC CABLE TRAY
JUNCTION BOX #4
PLAN & ELEVATION

PROJECT TITLE
REPAIR BUILDING 4820 FLIGHT LOADS LABORATORY
POWER CONTROL UPGRADE

APPROVALS	DATE
Chief, Facilities Engineering & Asset Mgmt. Office	5-20-10
Project Manager	5.19.10
Security Office	5/20/10
Project Requestor	5.17.10
Safety Office	6-1-10
Telecom	5/24/10

DRAWN BY	M. HENNIGH	DATE STRTD	09/17/08
W.O. #	95099	DATE PRNTD	04/26/10
PLOT SCALE		TRADE SH. No.	E-035
CAD FILE NAME			

SHEET No. 47 of 125

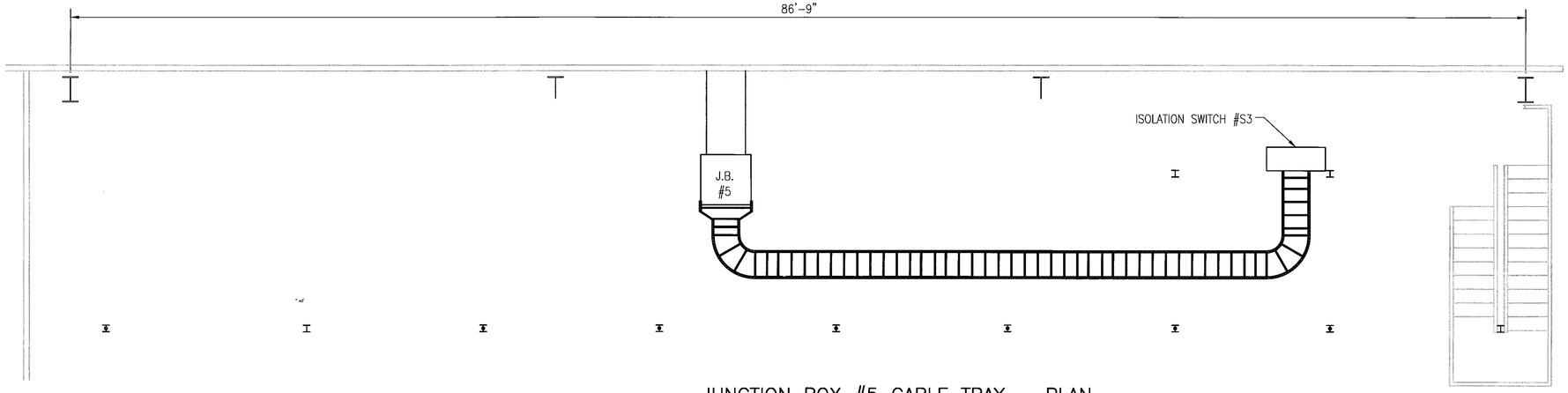

JUNCTION BOX #5 CABLE TRAY – PLAN
SCALE: 1/4" = 1'-0"

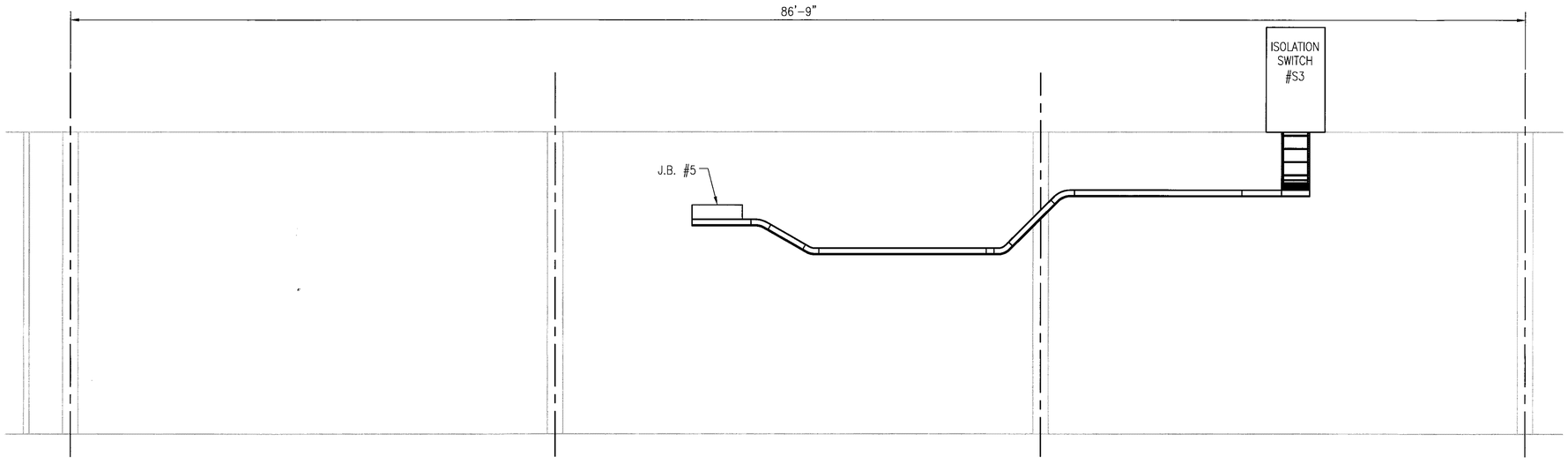

JUNCTION BOX #5 CABLE TRAY – ELEVATION
SCALE: 1/4" = 1'-0"

BRIAN JEROME GARLAND
REGISTERED ENGINEER
AGRICULTURE
No. 113393
STATE OF TENNESSEE

DEVELOPMENT ONE, INC.
1611 East Fourth Street, Suite 250
Santa Ana, California 92701
J.Bruce Camino, Architect, AIA, NCARB
(714) 689-0298
(714) 648-0197 FAX

DATE	SYM	REVISION	BY	A'PD
10/19/09		100% FINAL DESIGN		

NATIONAL AERONAUTICS AND SPACE ADMINISTRATION
DRYDEN FLIGHT RESEARCH CENTER
EDWARDS, CA

DRAWING TITLE
480VAC CABLE TRAY
JUNCTION BOX #6
PLAN & ELEVATION

PROJECT TITLE
REPAIR BUILDING 4820 FLIGHT LOADS LABORATORY
POWER CONTROL UPGRADE

APPROVALS	DATE
Chief, Aviation Engineering & Asset Mgmt. Office	6-2-10
Project Manager	5-13-10
Security Office	5/25/10
Project Engineer	5-17-10
Safety Office	6-1-10
Telecom	5/26/10

DRAWN BY	M. HENNIGH	DATE STRTD	09/17/08
W.O. #	95099	DATE PRNTD	04/26/10
PLOT SCALE	TRADE SN. No.	E-036	
CAD FILE NAME		SHEET No. 49 of 125	

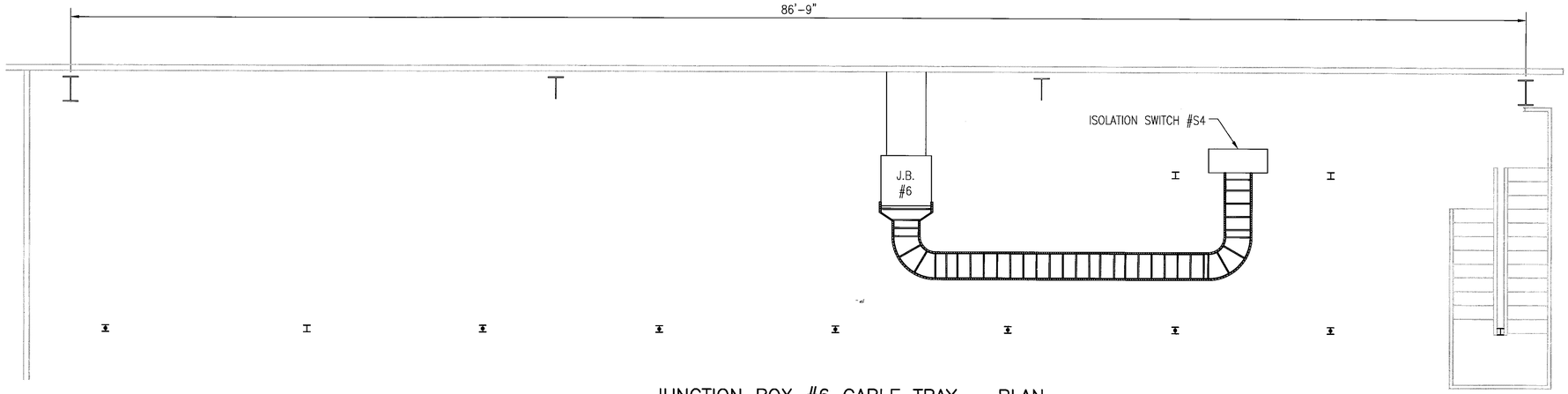

JUNCTION BOX #6 CABLE TRAY – PLAN
SCALE: 1/4" = 1'-0"

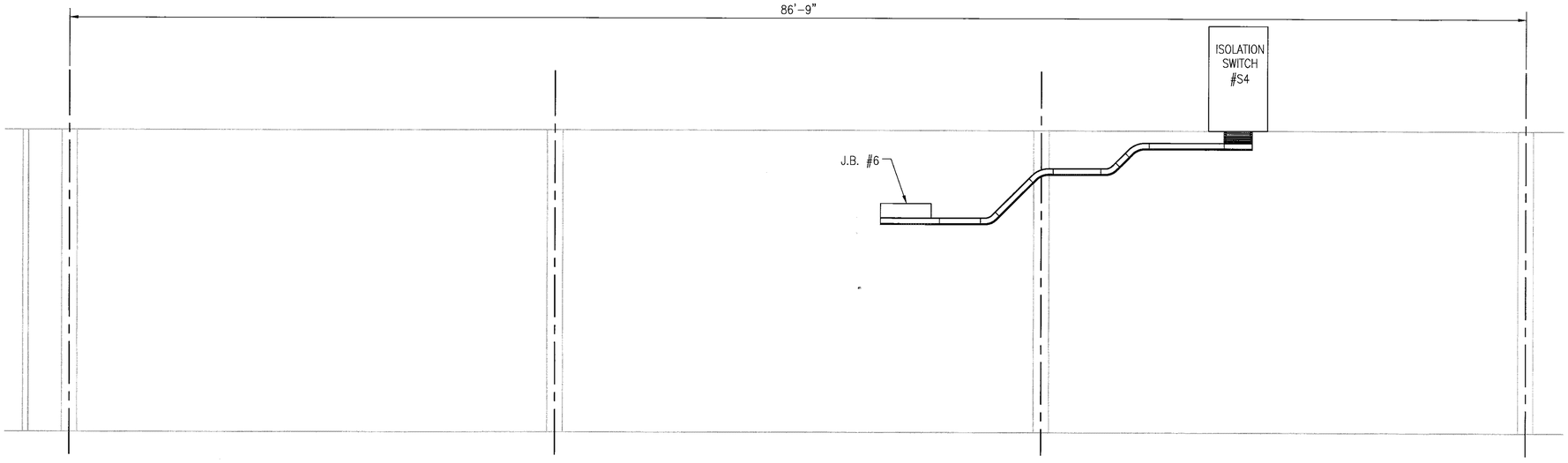

JUNCTION BOX #6 CABLE TRAY – ELEVATION
SCALE: 1/4" = 1'-0"

BRIAN JEROME GARLAND
REGISTERED ENGINEER
AGRICULTURE
No. 113350
STATE OF TENNESSEE

DEVELOPMENT ONE, INC.
1611 East Fourth Street, Suite 250
Santa Ana, California 92701
J.Bruce Camino, Architect, AIA, NCARB
(714) 689-0298
(714) 648-0197 FAX

DATE	SYM	REVISION	BY	A'PD
10/19/09		100% FINAL DESIGN		

NATIONAL AERONAUTICS AND SPACE ADMINISTRATION
DRYDEN FLIGHT RESEARCH CENTER
EDWARDS, CA

DRAWING TITLE
480VAC CABLE TRAY
JUNCTION BOX #6
PLAN & ELEVATION

PROJECT TITLE
REPAIR BUILDING 4820 FLIGHT LOADS LABORATORY
POWER CONTROL UPGRADE

APPROVALS	DATE
Chief Facilities Engineering & Asset Mgmt. Office	6-2-10
Project Manager	5.13.10
Security Office	5/25/10
Project Inspector	5.17.10
Safety Office	6-1-10
Telecom	5/26/10

DRAWN BY	M. HENNIGH	DATE STRTD	09/17/08
W.O. #	95099	DATE PRNTD	04/26/10
PLOT SCALE		TRADE SH. No.	E-037
CAD FILE NAME			

SHEET No. 50 of 125

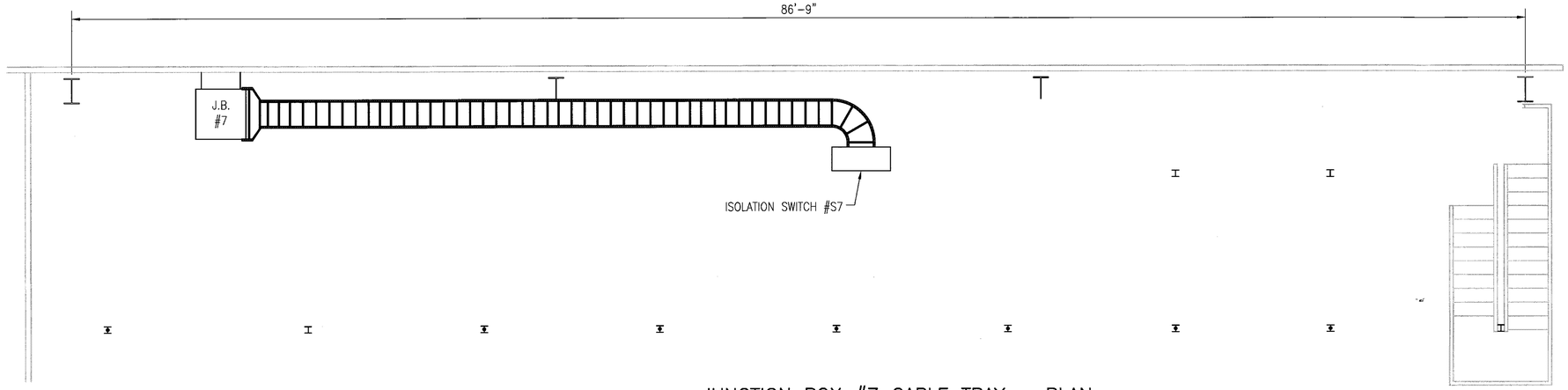

JUNCTION BOX #7 CABLE TRAY – PLAN
SCALE: 1/4" = 1'-0"

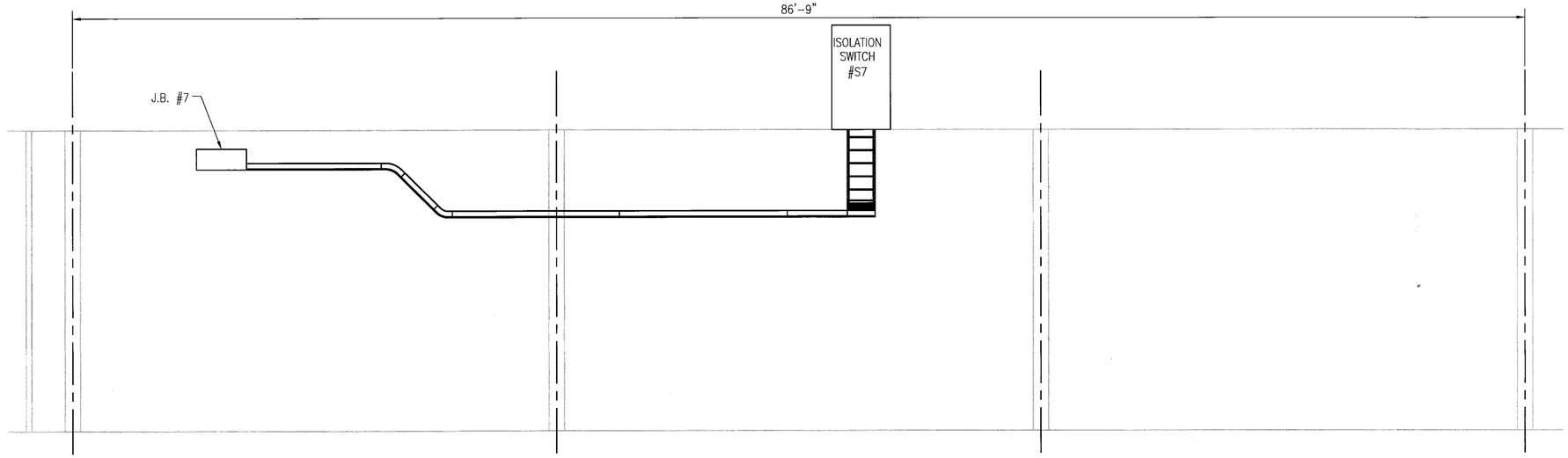

JUNCTION BOX #7 CABLE TRAY – ELEVATION
SCALE: 1/4" = 1'-0"

BRIAN JEROME GARLAND
REGISTERED ENGINEER
AGRICULTURE
No. 113330
STATE OF TENNESSEE

DEVELOPMENT ONE, INC.
1611 East Fourth Street, Suite 250
Santa Ana, California 92701
J.Bruce Camino, Architect, AIA, NCARB
(714) 689-0298
(714) 648-0197 FAX

DATE	SYM	REVISION	BY	A'PD
10/19/09		100% FINAL DESIGN		

NATIONAL AERONAUTICS AND SPACE ADMINISTRATION
DRYDEN FLIGHT RESEARCH CENTER
EDWARDS, CA

DRAWING TITLE
480VAC CABLE TRAY
JUNCTION BOX #7
PLAN & ELEVATION

PROJECT TITLE
REPAIR BUILDING 4820 FLIGHT LOADS LABORATORY
POWER CONTROL UPGRADE

APPROVALS	DATE
Chief, Facilities Engineering & Asset Mgmt. Office	6-2-10
Project Manager	5.13.10
Safety Office	5/25/10
Project Requestor	5-17-10
Safety Office	6-1-10
Telecom	5/24/10

DRAWN BY	M. HENNIGH	DATE STRTD	09/17/08
W.O. #	95099	DATE PRNTD	04/26/10
PLOT SCALE		TRADE SH. No.	E-038
CAD FILE NAME			
		SHEET No.	51 of 125

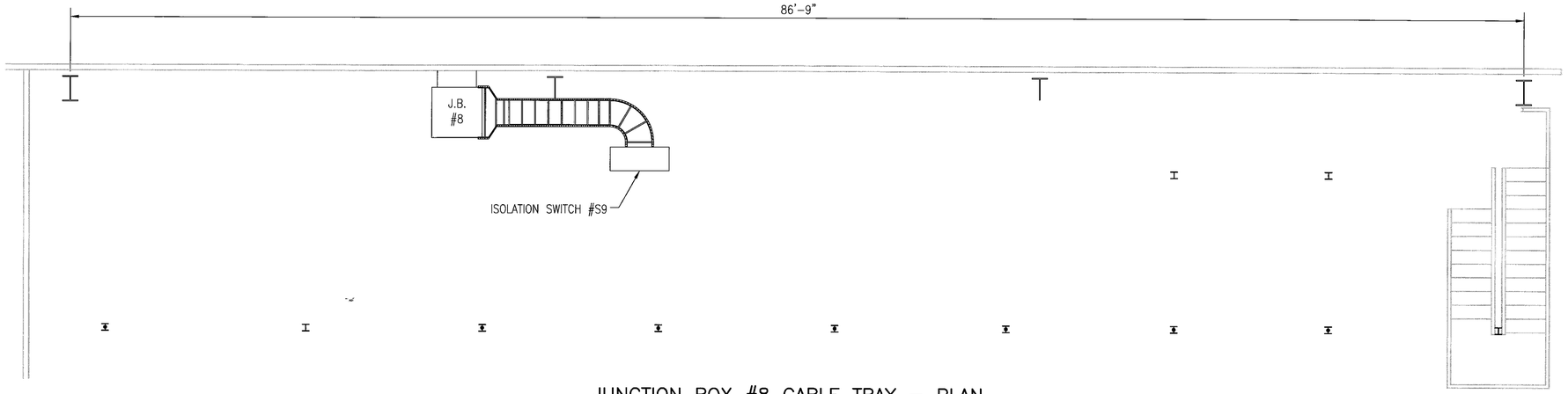

JUNCTION BOX #8 CABLE TRAY – PLAN
SCALE: 1/4" = 1'-0"

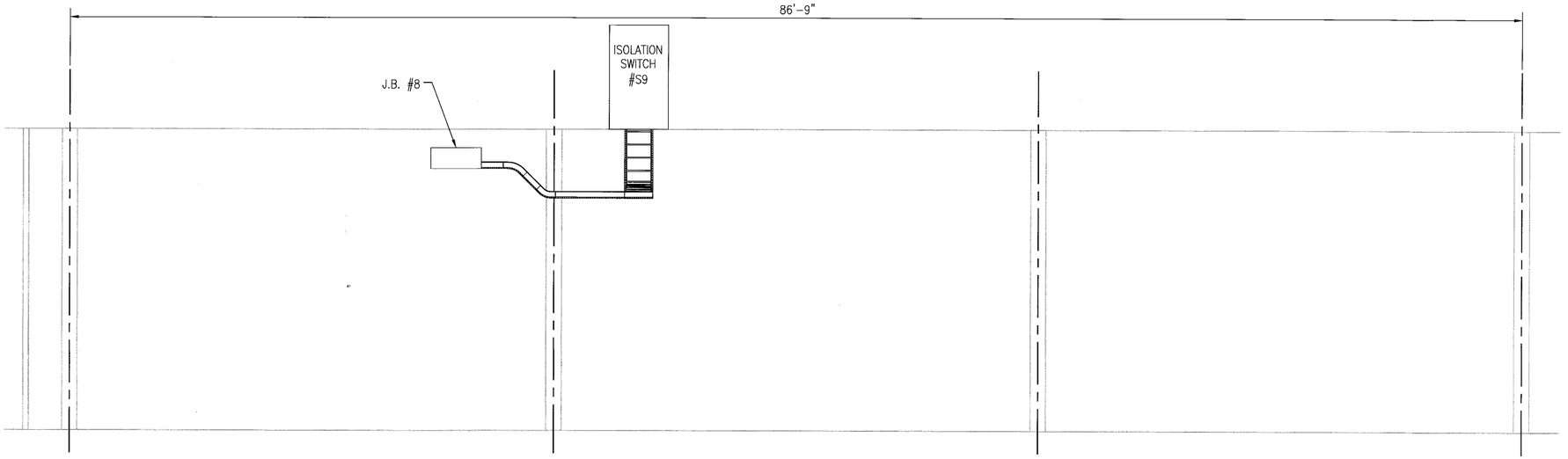

JUNCTION BOX #8 CABLE TRAY – ELEVATION
SCALE: 1/4" = 1'-0"

BRIAN JEROME GARLAND
REGISTERED ENGINEER
AGRICULTURE
COMMERCE
No. 113330
STATE OF TENNESSEE

DEVELOPMENT ONE, INC.
1611 East Fourth Street, Suite 250
Santa Ana, California 92701
J.Bruce Camino, Architect, AIA, NCARB
(714) 689-0298
(714) 648-0197 FAX

DATE	SYM	REVISION	BY	A'PD
10/19/09		100% FINAL DESIGN		

NATIONAL AERONAUTICS AND SPACE ADMINISTRATION
DRYDEN FLIGHT RESEARCH CENTER
EDWARDS, CA

DRAWING TITLE
480VAC CABLE TRAY
JUNCTION BOX #8
PLAN & ELEVATION

PROJECT TITLE
REPAIR BUILDING 4820 FLIGHT LOADS LABORATORY
POWER CONTROL UPGRADE

APPROVALS		DATE
Chief Facilities Engineering & Asset Mgmt. Office		6-2-10
Project Manager		6.13.10
Security Office		5/25/10
Project Requestor		5.17.10
Safety Office		6-1-10
Telecom		5/26/10

DRAWN BY	M. HENNIGH	DATE STRTD	09/17/08
W.O. #	95099	DATE PRNTD	04/26/10
PLOT SCALE		TRADE SH. No.	E-039
CAD FILE NAME			

SHEET No. 52 of 125

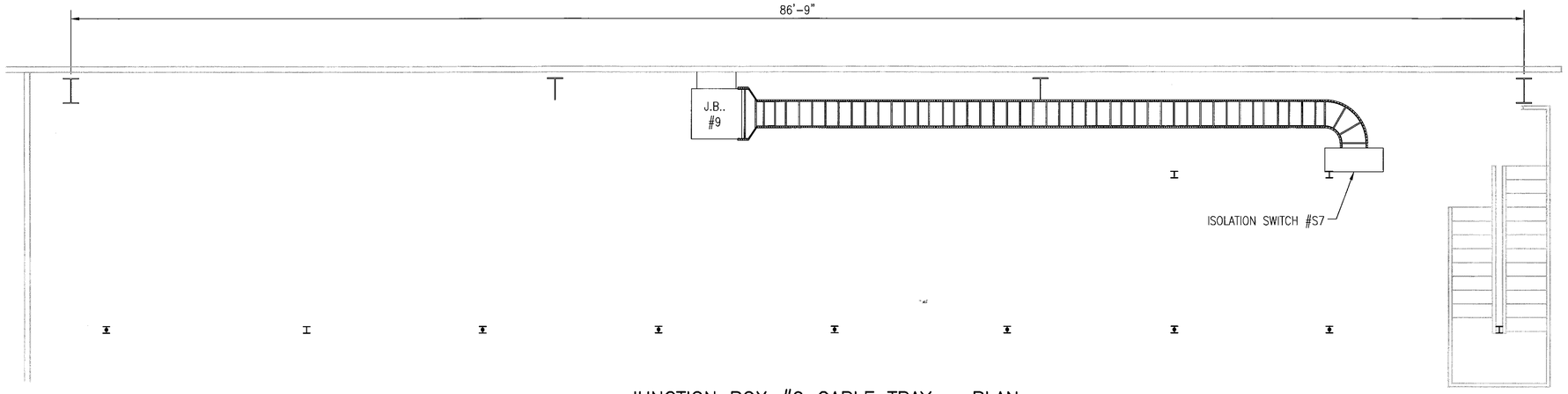

JUNCTION BOX #9 CABLE TRAY – PLAN
SCALE: 1/4" = 1'-0"

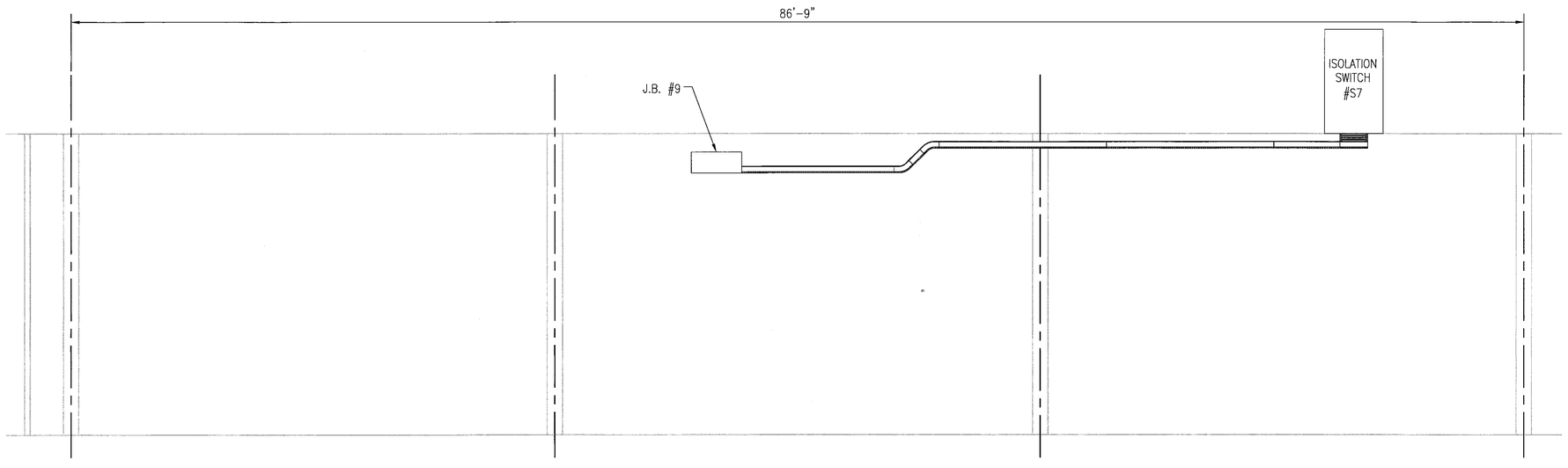

JUNCTION BOX #9 CABLE TRAY – ELEVATION
SCALE: 1/4" = 1'-0"

BRIAN JEROME GARLAND
REGISTERED ENGINEER
AGRICULTURE
No. 113350
STATE OF TENNESSEE

DEVELOPMENT ONE, INC.
1611 East Fourth Street, Suite 250
Santa Ana, California 92701
J.Bruce Camino, Architect, AIA, NCARB
(714) 689-0298
(714) 648-0197 FAX

DATE	SYM	REVISION	BY	A'PD
10/19/09		100% FINAL DESIGN		

NATIONAL AERONAUTICS AND SPACE ADMINISTRATION
DRYDEN FLIGHT RESEARCH CENTER
EDWARDS, CA

DRAWING TITLE
480VAC CABLE TRAY
JUNCTION BOX #9
PLAN & ELEVATION

PROJECT TITLE
REPAIR BUILDING 4820 FLIGHT LOADS LABORATORY
POWER CONTROL UPGRADE

APPROVALS	DATE
Chief, Facilities Engineering & Asset Mgmt. Office	6-2-10
Project Manager	6.13.10
Security Office	5/25/10
Project Requestor	5.17.10
Safety Office	6-1-10
Telecom	5/24/10

DRAWN BY	M. HENNIGH	DATE STRTD	09/17/08
W.O. #	95099	DATE PRNTD	04/26/10
PLOT SCALE		TRADE SH. No.	E-040
CAD FILE NAME			SHEET No. 53 of 125

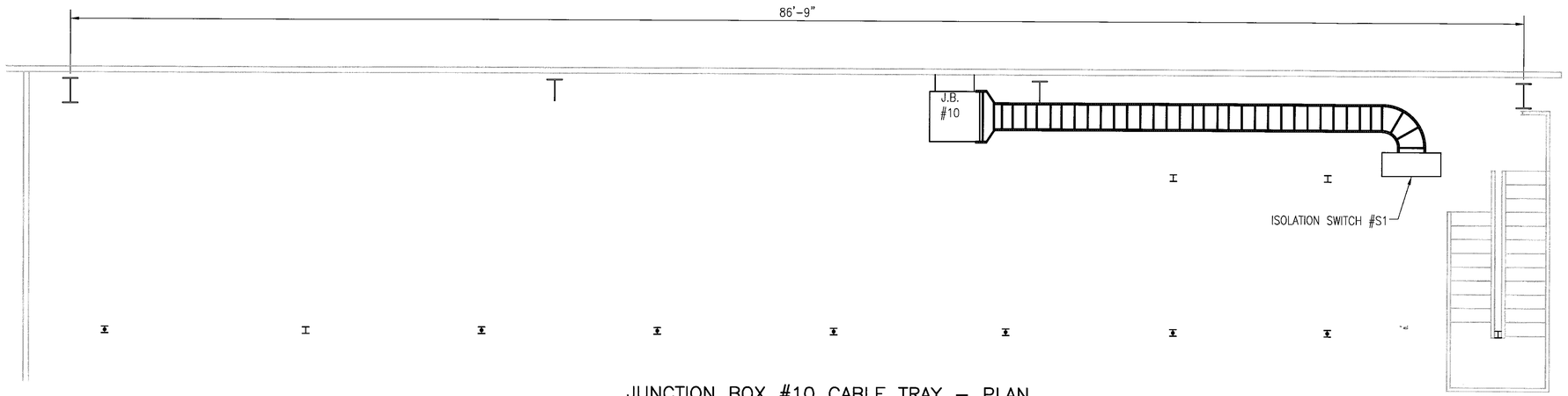

JUNCTION BOX #10 CABLE TRAY – PLAN
SCALE: 1/4" = 1'-0"

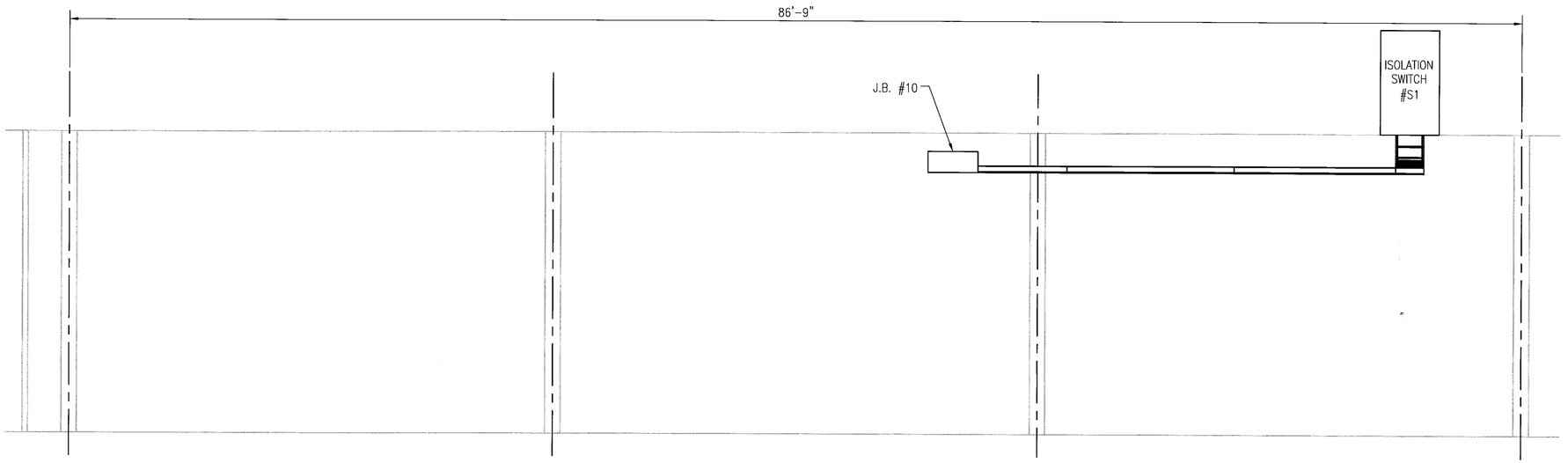

JUNCTION BOX #10 CABLE TRAY – ELEVATION
SCALE: 1/4" = 1'-0"

BRIAN JEROME GARLAND
REGISTERED ENGINEER
AGRICULTURE
No. 113391
STATE OF TENNESSEE

DEVELOPMENT ONE, INC.
1611 East Fourth Street, Suite 250
Santa Ana, California 92701
J.Bruce Camino, Architect, AIA, NCARB
(714) 689-0298
(714) 648-0197 FAX

DATE	SYM	REVISION	BY	A'PD
10/19/09		100% FINAL DESIGN		

NATIONAL AERONAUTICS AND SPACE ADMINISTRATION
DRYDEN FLIGHT RESEARCH CENTER
EDWARDS, CA

DRAWING TITLE
480VAC CABLE TRAY
JUNCTION BOX #10
PLAN & ELEVATION

PROJECT TITLE
REPAIR BUILDING 4820 FLIGHT LOADS LABORATORY
POWER CONTROL UPGRADE

APPROVALS	DATE
Chief Propulsion Engineering & Asset Mgmt. Office	6-2-10
Project Manager	5/13/10
Security Office	5/25/10
Project Requestor	5/17/10
Safety Office	6-1-10
Telecom	5/24/10

DRAWN BY	M. HENNIGH	DATE STRTD	09/17/08
W.O. #	95099	DATE PRNTD	04/26/10
PLOT SCALE		TRADE SHT. No.	E-041
CAD FILE NAME			SHEET No. 54 of 125

NOTES:

1. CABINET TO PATCH PANEL CABLE TRAYS HORIZONTAL RUNS SHALL NOT BE HIGHER THAN 10'-0" ABOVE FINISHED FLOOR UNDER MEZZANINE AREA.
2. SEE DRAWING E-030 THRU E-041 FOR TRANSFORMER CABLE TRAY ROUTINGS BELOW MEZZANINE.

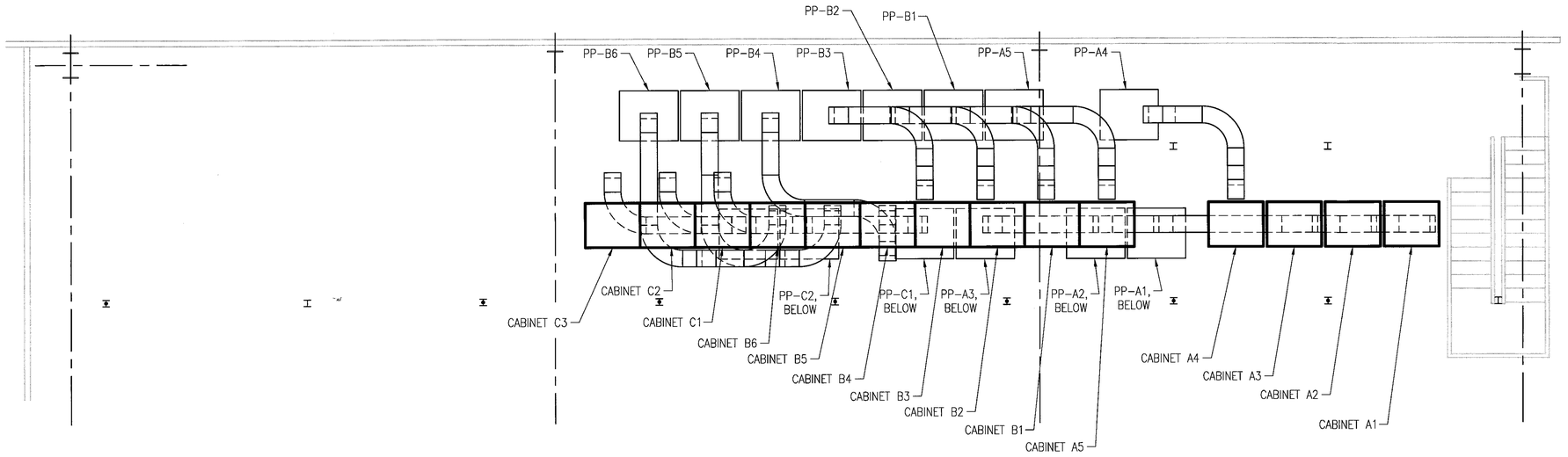

PLAN – MEZZANINE FLOOR

SCALE: 1/4" = 1'-0"

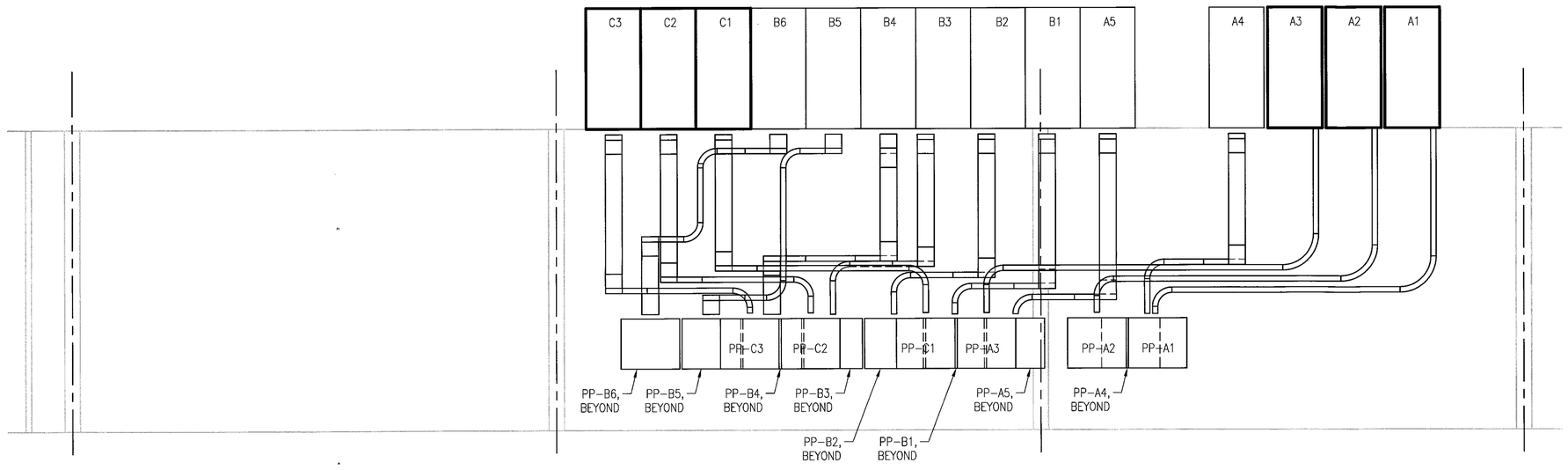

ELEVATION

SCALE: 1/4" = 1'-0"

NOTE: PATCH PANELS SUPPORTS NOT SHOWN FOR CLARITY IN THIS VIEW

BRIAN JEROME GARLAND — REGISTERED ENGINEER — AGRICULTURE — No. 113580 — STATE OF TENNESSEE

DEVELOPMENT ONE, INC.
1611 East Fourth Street, Suite 250
Santa Ana, California 92701
J.Bruce Camino, Architect, AIA, NCARB
(714) 689-0298
(714) 648-0197 FAX

DATE	SYM	REVISION	BY	A'PD
10/19/09		100% FINAL DESIGN		

NATIONAL AERONAUTICS AND SPACE ADMINISTRATION
DRYDEN FLIGHT RESEARCH CENTER
EDWARDS, CA

DRAWING TITLE
480VAC CABLE TRAY
LOAD SIDE
PLAN & ELEVATION VIEW

PROJECT TITLE
REPAIR BUILDING 4820 FLIGHT LOADS LABORATORY
POWER CONTROL UPGRADE

APPROVALS	DATE
Chief Facilities Engineering & Asset Mgmt. Office	6-2-10
Project Manager	5-13-10
Security Office	5/25/10
Project Requestor	5-17-10
Safety Office	6-1-10
Telecom	5/24/10

DRAWN BY	M. HENNIGH	DATE STRTD	09/17/08
W.O. #	95099	DATE PRNTD	04/26/10
PLOT SCALE		TRADE SH. No.	E-050
CAD FILE NAME			

SHEET No. 55 of 125

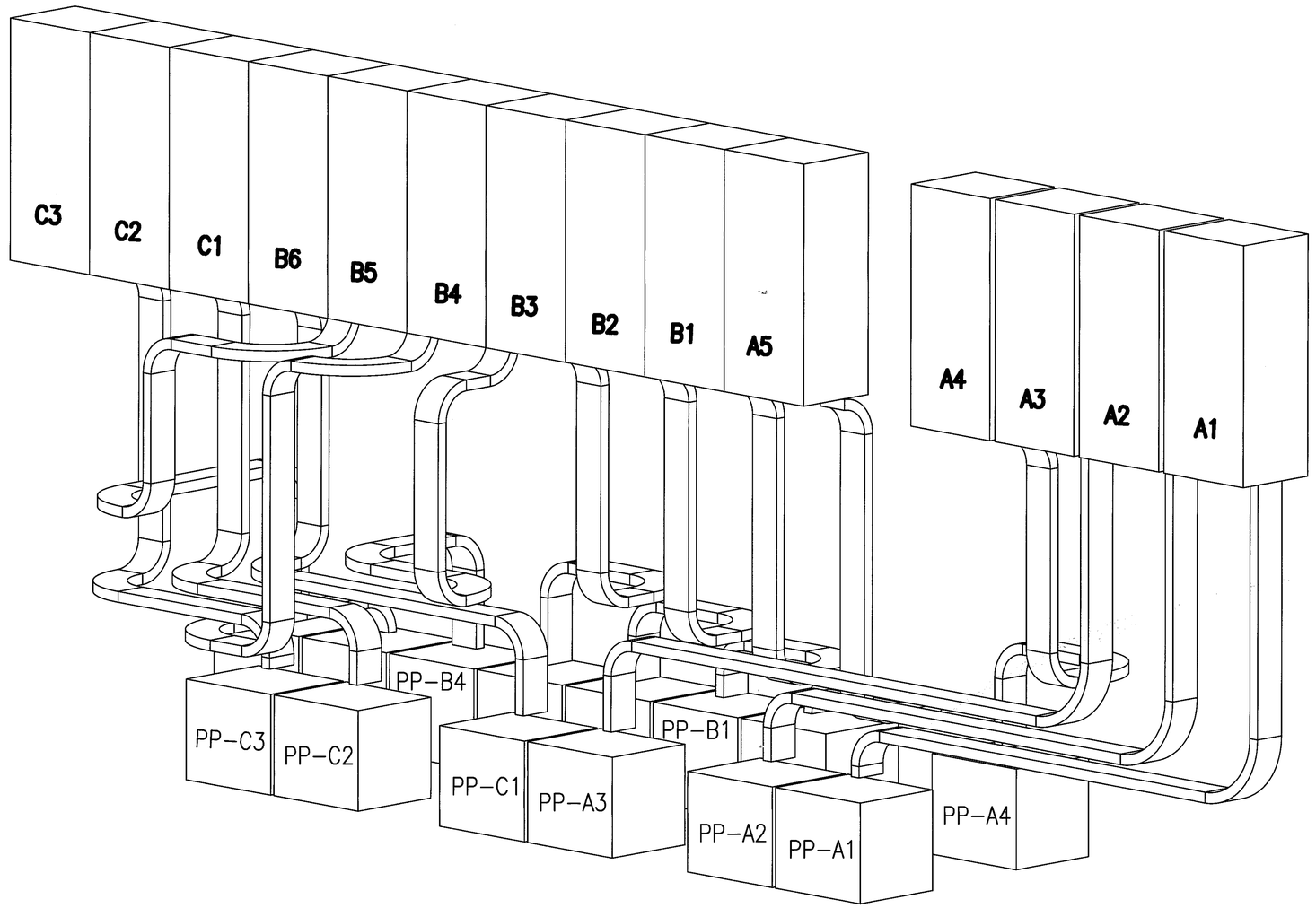

PATCH PANELS WITH CABLE TRAY ROUTING TO CABINETS
SCALE: 1/2" = 1'-0"

BRIAN JEROME GARLAND
REGISTERED ENGINEER
AGRICULTURE
No. 113520
STATE OF TENNESSEE

DEVELOPMENT ONE, INC.
1611 East Fourth Street, Suite 250
Santa Ana, California 92701
J.Bruce Camino, Architect, AIA, NCARB
(714) 689-0298
(714) 648-0197 FAX

DATE	SYM	REVISION	BY	A'PD
10/19/09		100% FINAL DESIGN		

NATIONAL AERONAUTICS AND SPACE ADMINISTRATION
DRYDEN FLIGHT RESEARCH CENTER
EDWARDS, CA

DRAWING TITLE
480VAC CABLE TRAY
LOAD SIDE
ISOMETRIC VIEW

PROJECT TITLE
REPAIR BUILDING 4820 FLIGHT LOADS LABORATORY
POWER CONTROL UPGRADE

APPROVALS	DATE
Chief Facilities Engineering & Asset Mgmt. Office	6-2-10
Project Manager	6.13.10
Security Office	5/25/10
Project Requestor	5.17.10
Safety Office	6-7-10
Telecom	5/24/10

DRAWN BY	M. HENNIGH	DATE STRTD	09/17/08
W.O. #	95099	DATE PRNTD	04/26/10
PLOT SCALE		TRADE SN. No.	E-051
CAD FILE NAME		SHEET No. 56 of 125	

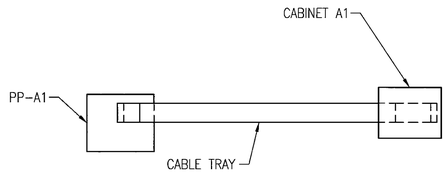

PP-A1 WITH CABLE TRAY ROUTING
TO CABINET-A1 - PLAN
SCALE: 1/4" = 1'-0"

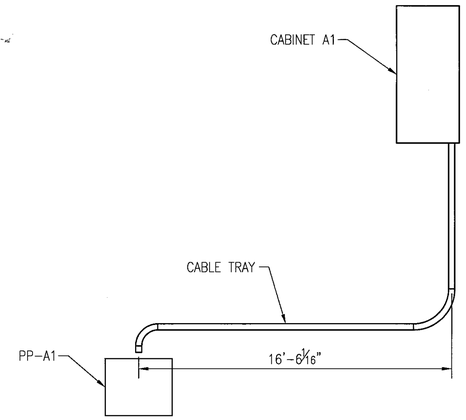

PP-A1 WITH CABLE TRAY ROUTING
TO CABINET-A1 - ELEVATION
SCALE: 1/4" = 1'-0"

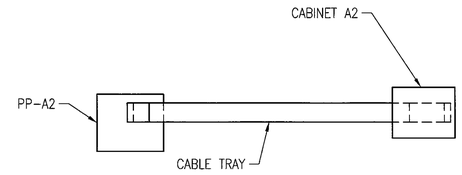

PP-A2 WITH CABLE TRAY ROUTING
TO CABINET-A2 - PLAN
SCALE: 1/4" = 1'-0"

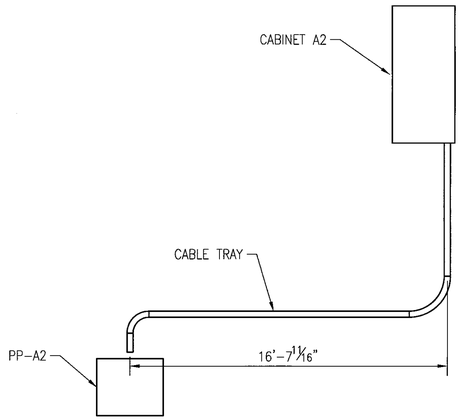

PP-A2 WITH CABLE TRAY ROUTING
TO CABINET-A2 - ELEVATION
SCALE: 1/4" = 1'-0"

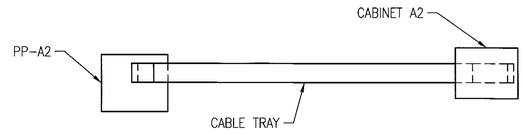

PP-3 WITH CABLE TRAY ROUTING
TO CABINET-A3 - PLAN
SCALE: 1/4" = 1'-0"

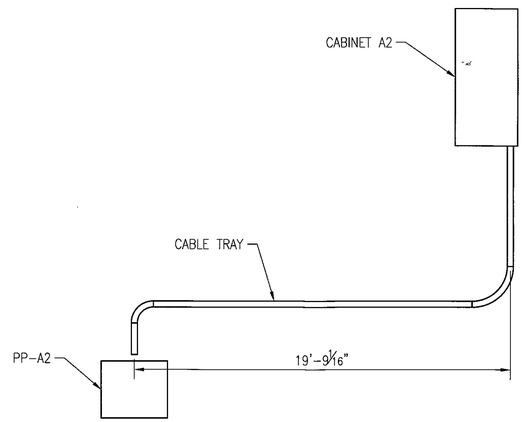

PP-A3 WITH CABLE TRAY ROUTING
TO CABINET-A3 - ELEVATION
SCALE: 1/4" = 1'-0"

DEVELOPMENT ONE, INC.
1611 East Fourth Street, Suite 250
Santa Ana, California 92701
J.Bruce Camino, Architect, AIA, NCARB
(714) 689-0298
(714) 648-0197 FAX

DATE	SYM	REVISION	BY	A'PD
10/19/09		100% FINAL DESIGN		

NATIONAL AERONAUTICS AND SPACE ADMINISTRATION
DRYDEN FLIGHT RESEARCH CENTER
EDWARDS, CA

DRAWING TITLE
480VAC CABLE TRAY
LOAD SIDE
PCC A1 THROUGH PCC A3

PROJECT TITLE
REPAIR BUILDING 4820 FLIGHT LOADS LABORATORY
POWER CONTROL UPGRADE

APPROVALS	DATE
Chief, Facilities Engineering & Asset Mgmt. Office	6-17-10
Project Manager	5-13-10
Security Office	5/25/10
Project Requestor	5-17-10
Safety Office	6-1-10
Telecom	5/24/10

DRAWN BY	M. HENNIGH	DATE STRTD	09/17/08
W.O. #	95099	DATE PRNTD	04/26/10
PLOT SCALE		TRADE SH. No.	E-052
CAD FILE NAME			SHEET No. 57 of 125

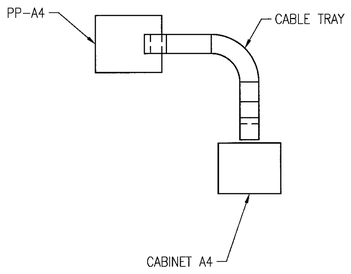

PP–A4 WITH CABLE TRAY ROUTING
TO CABINET–A4 – PLAN
SCALE: 1/4" = 1'–0"

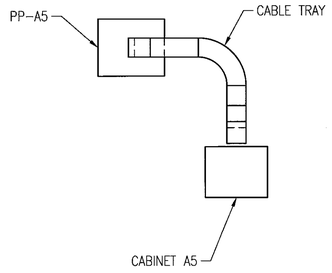

PP–A5 WITH CABLE TRAY ROUTING
TO CABINET–A5 – PLAN
SCALE: 1/4" = 1'–0"

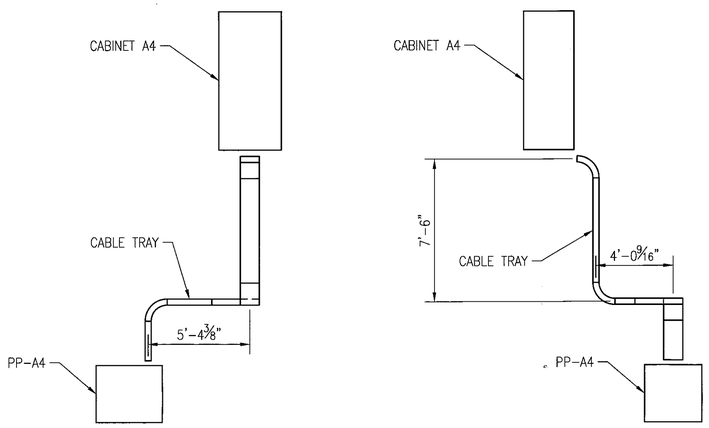

PP–A4 WITH CABLE TRAY ROUTING
TO CABINET–A4 – ELEVATION
SCALE: 1/4" = 1'–0"

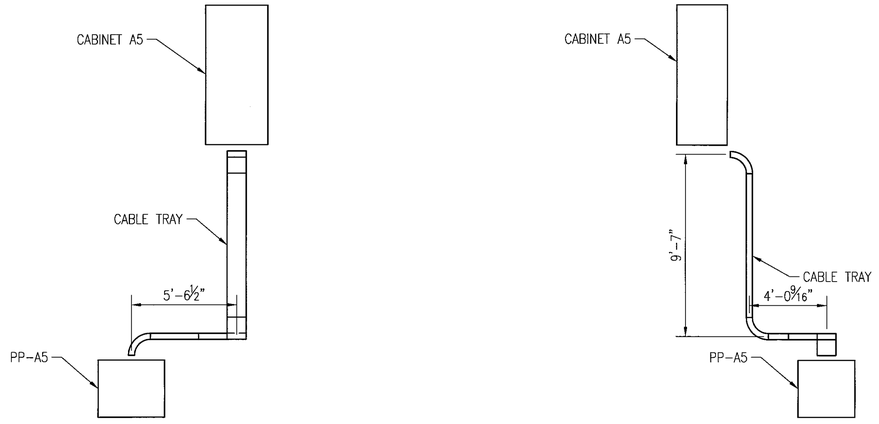

PP–A5 WITH CABLE TRAY ROUTING
TO CABINET–A5 – ELEVATION
SCALE: 1/4" = 1'–0"

BRIAN JEROME GARLAND
REGISTERED ENGINEER
AGRICULTURE
MINERS
No. 113290
STATE OF TENNESSEE

DEVELOPMENT ONE, INC.
1611 East Fourth Street, Suite 250
Santa Ana, California 92701
J.Bruce Camino, Architect, AIA, NCARB
(714) 689-0298
(714) 648-0197 FAX

DATE	SYM	REVISION	BY	A'PD
10/19/09		100% FINAL DESIGN		

NATIONAL AERONAUTICS AND SPACE ADMINISTRATION
DRYDEN FLIGHT RESEARCH CENTER
EDWARDS, CA

DRAWING TITLE
480VAC CABLE TRAY
LOAD SIDE
PCC A4 AND PCC A5

PROJECT TITLE
REPAIR BUILDING 4820 FLIGHT LOADS LABORATORY
POWER CONTROL UPGRADE

APPROVALS	DATE
Chief, Facilities Engineering & Asset Mgmt. Office	6-17-10
Project Manager	5.13.10
Safety Office	5/25/10
Project Requestor	5.17.10
Safety Office	6-1-10
Telecom	5/24/10

DRAWN BY	M. HENNIGH	DATE STRTD	09/17/08
W.O. #	95099	DATE PRNTD	04/26/10
PLOT SCALE		TRADE Sht. No.	E–053
CAD FILE NAME		SHEET No. 58 of 125	

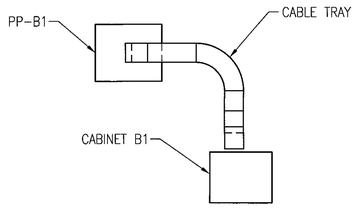

PP-B1 WITH CABLE TRAY ROUTING
TO CABINET-B1 - PLAN
SCALE: 1/4" = 1'-0"

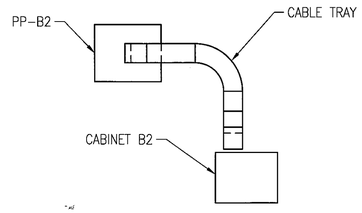

PP-B2 WITH CABLE TRAY ROUTING
TO CABINET-B2 - PLAN
SCALE: 1/4" = 1'-0"

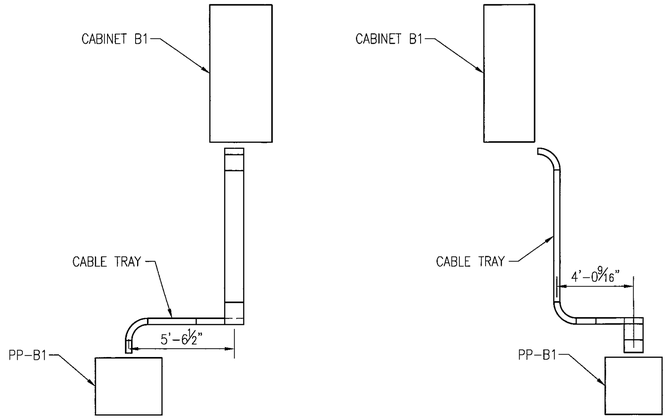

PP-B1 WITH CABLE TRAY ROUTING
TO CABINET-B1 - ELEVATION
SCALE: 1/4" = 1'-0"

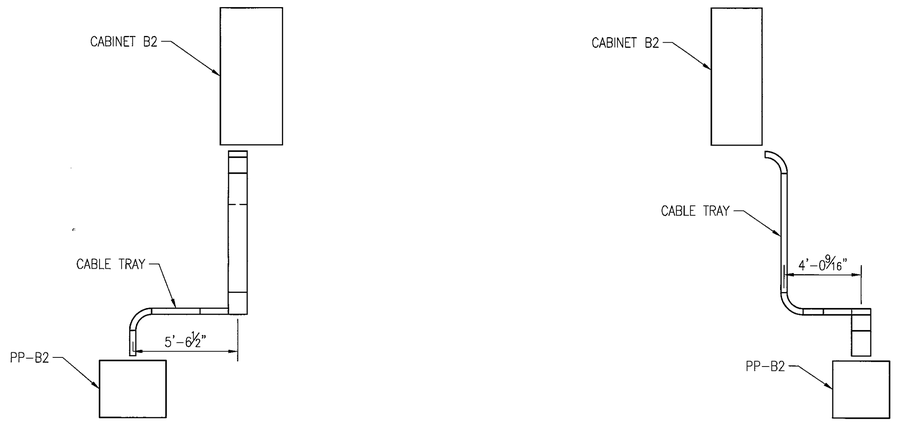

PP-B2 WITH CABLE TRAY ROUTING
TO CABINET-B2 - ELEVATION
SCALE: 1/4" = 1'-0"

BRIAN JEROME GARLAND
REGISTERED ENGINEER
AGRICULTURE
No. 113330
STATE OF TENNESSEE

DEVELOPMENT ONE, INC.
1611 East Fourth Street, Suite 250
Santa Ana, California 92701
J.Bruce Camino, Architect, AIA, NCARB
(714) 689-0298
(714) 648-0197 FAX

DATE	SYM	REVISION	BY	A'PD
10/19/09		100% FINAL DESIGN		

NATIONAL AERONAUTICS AND SPACE ADMINISTRATION
DRYDEN FLIGHT RESEARCH CENTER
EDWARDS, CA

DRAWING TITLE
480VAC CABLE TRAY
LOAD SIDE
PCC B1 AND PCC B2

PROJECT TITLE
REPAIR BUILDING 4820 FLIGHT LOADS LABORATORY
POWER CONTROL UPGRADE

APPROVALS		DATE
Chief, Facilities Engineering & Asset Mgmt. Office	Dan Crowley	6-17-10
Project Manager	[signature]	5.13.10
Security Office	[signature]	5/25/10
Project Requestor	[signature]	5.17.10
Safety Office	[signature]	6-1-10
Telecom	[signature]	5/26/10

DRAWN BY	M. HENNIGH	DATE STRTD	09/17/08
W.O. #	95099	DATE PRNTD	04/26/10
PLOT SCALE		TRADE SH. No.	E-054
CAD FILE NAME			

SHEET No. 59 of 125

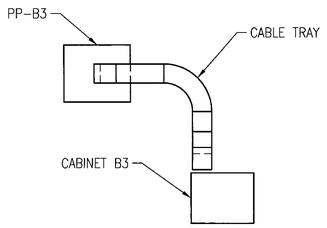

PP–B3 WITH CABLE TRAY ROUTING
TO CABINET–B3 – PLAN
SCALE: 1/4" = 1'–0"

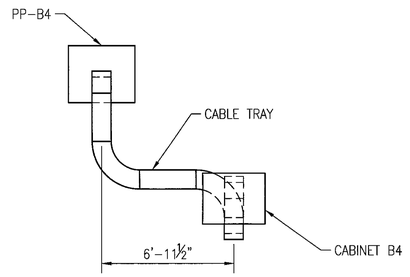

PP–B4 WITH CABLE TRAY ROUTING
TO CABINET–B4 – PLAN
SCALE: 1/4" = 1'–0"

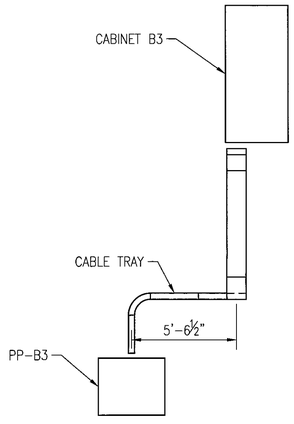

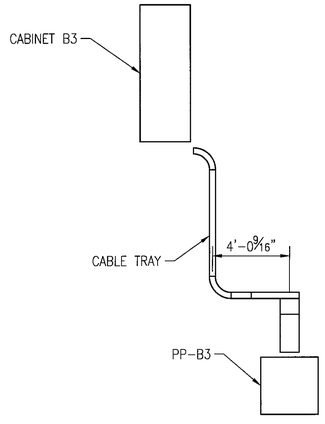

PP–B3 WITH CABLE TRAY ROUTING
TO CABINET–B3 – ELEVATION
SCALE: 1/4" = 1'–0"

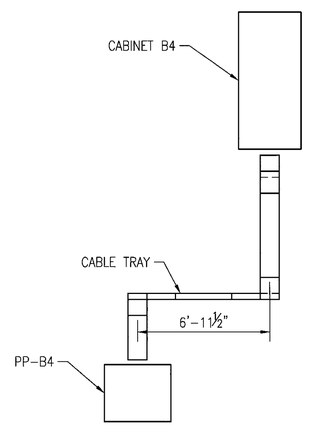

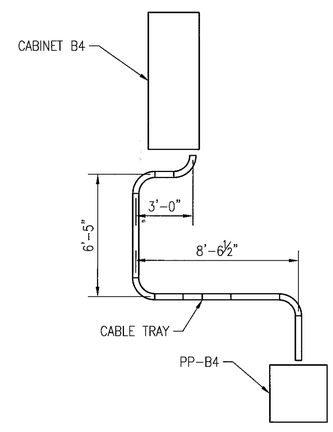

PP–B4 WITH CABLE TRAY ROUTING
TO CABINET–B4 – ELEVATION
SCALE: 1/4" = 1'–0"

DEVELOPMENT ONE, INC.
1611 East Fourth Street, Suite 250
Santa Ana, California 92701
J.Bruce Camino, Architect, AIA, NCARB
(714) 689-0298
(714) 648-0197 FAX

DATE	SYM	REVISION	BY	A'PD
10/19/09		100% FINAL DESIGN		

NATIONAL AERONAUTICS AND SPACE ADMINISTRATION
DRYDEN FLIGHT RESEARCH CENTER
EDWARDS, CA

DRAWING TITLE
480VAC CABLE TRAY
LOAD SIDE
PCC B4 AND PCC B4

PROJECT TITLE
REPAIR BUILDING 4820 FLIGHT LOADS LABORATORY
POWER CONTROL UPGRADE

APPROVALS	DATE
Chief, Facilities Engineering & Asset Mgmt. Office	6-17-10
Project Manager	5.13.10
Security Office	5/25/10
Project Requestor	5.17.10
Safety Office	6-1-10
Telecom	5/24/10

DRAWN BY	M. HENNIGH	DATE STRTD	09/17/08
W.O. #	95099	DATE PRNTD	04/26/10
PLOT SCALE		TRADE Sht. No.	E–055
CAD FILE NAME			SHEET No. 60 of 125

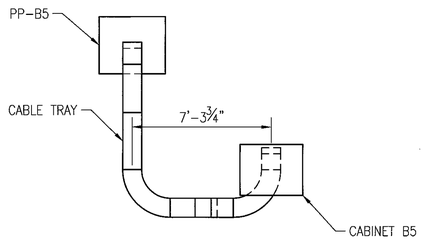

PP-B5 WITH CABLE TRAY ROUTING
TO CABINET-B5 – PLAN
SCALE: 1/4" = 1'-0"

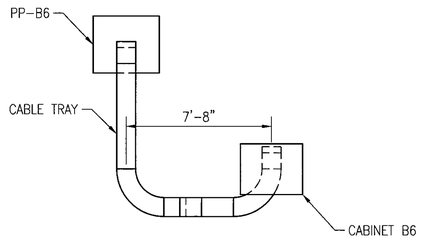

PP-B6 WITH CABLE TRAY ROUTING
TO CABINET-B6 – PLAN
SCALE: 1/4" = 1'-0"

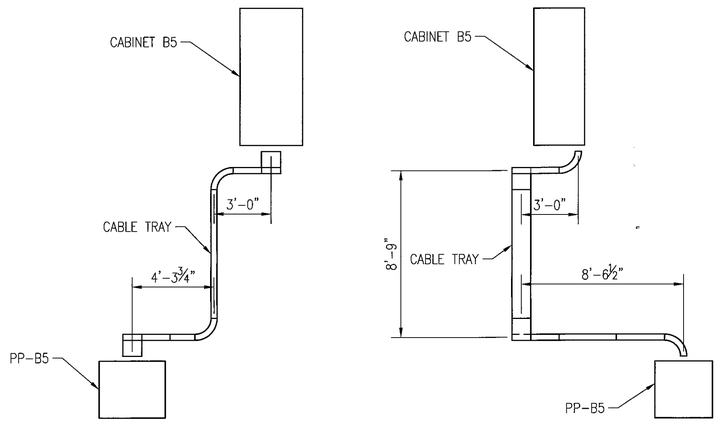

PP-B5 WITH CABLE TRAY ROUTING
TO CABINET-B5 – ELEVATION
SCALE: 1/4" = 1'-0"

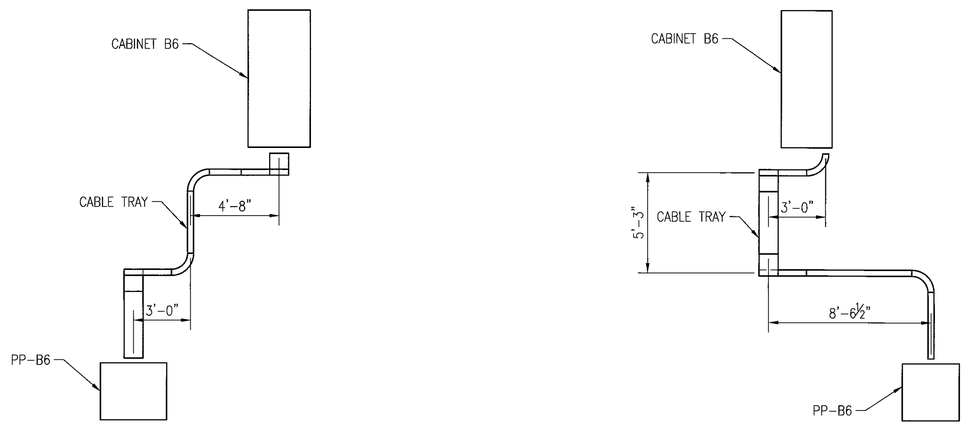

PP-B6 WITH CABLE TRAY ROUTING
TO CABINET-B6 – ELEVATION
SCALE: 1/4" = 1'-0"

BRIAN JEROME GARLAND
REGISTERED ENGINEER
AGRICULTURE
COMMERCE
No. 113330
STATE OF TENNESSEE

DEVELOPMENT ONE, INC.
1611 East Fourth Street, Suite 250
Santa Ana, California 92701
J.Bruce Camino, Architect, AIA, NCARB
(714) 689-0298
(714) 648-0197 FAX

DATE	SYM	REVISION	BY	A'PD
10/19/09		100% FINAL DESIGN		

NATIONAL AERONAUTICS AND SPACE ADMINISTRATION
DRYDEN FLIGHT RESEARCH CENTER
EDWARDS, CA

DRAWING TITLE
480VAC CABLE TRAY
LOAD SIDE
PCC B5 AND PCC B6

PROJECT TITLE
REPAIR BUILDING 4820 FLIGHT LOADS LABORATORY
POWER CONTROL UPGRADE

APPROVALS	DATE
Chief, Facilities Engineering & Asset Mgmt. Office: Dan Crowley	6-17-10
Project Manager: Mark M. Melcor	5-13-10
Security Office: KHBC	5/25/10
Project Requesting: Marvin J. Horn	5-17-10
Safety Office: John M. Morgan	6-1-10
Telecom:	5/26/10

DRAWN BY	M. HENNIGH	DATE STRTD	09/17/08
W.O. #	95099	DATE PRNTD	04/26/10
PLOT SCALE		TRADE SH. No.	E-056
CAD FILE NAME			

SHEET No. 61 of 125

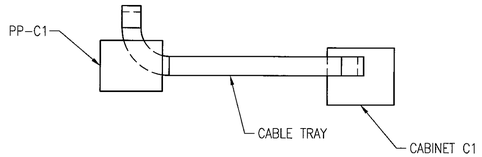

PP-C1 WITH CABLE TRAY ROUTING
TO CABINET-C1 - PLAN
SCALE: 1/4" = 1'-0"

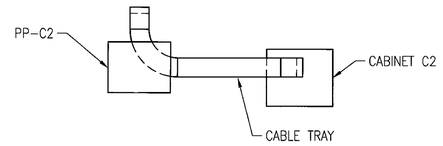

PP-C2 WITH CABLE TRAY ROUTING
TO CABINET-C2 - PLAN
SCALE: 1/4" = 1'-0"

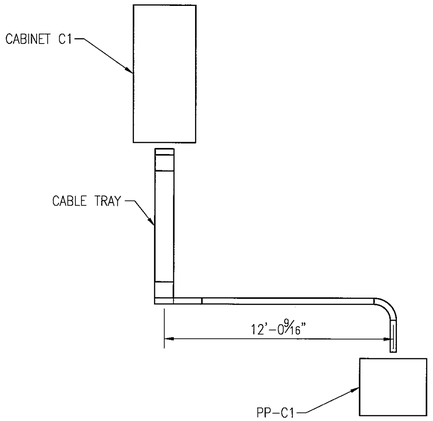

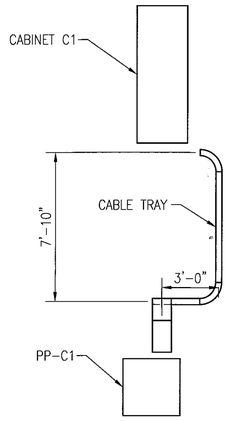

PP-C1 WITH CABLE TRAY ROUTING
TO CABINET-C1 - ELEVATION
SCALE: 1/4" = 1'-0"

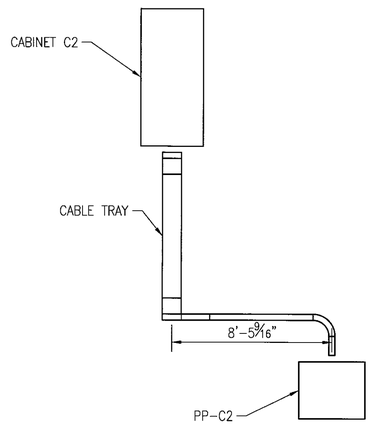

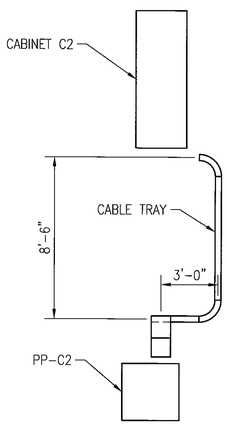

PP-C2 WITH CABLE TRAY ROUTING
TO CABINET-C2 - ELEVATION
SCALE: 1/4" = 1'-0"

DEVELOPMENT ONE, INC.
1611 East Fourth Street, Suite 250
Santa Ana, California 92701
J.Bruce Camino, Architect, AIA, NCARB
(714) 689-0298
(714) 648-0197 FAX

DATE	SYM	REVISION	BY	A'PD
10/19/09		100% FINAL DESIGN		

NATIONAL AERONAUTICS AND SPACE ADMINISTRATION
DRYDEN FLIGHT RESEARCH CENTER
EDWARDS, CA

DRAWING TITLE
480VAC CABLE TRAY
LOAD SIDE
PCC C1 AND PCC C2

PROJECT TITLE
REPAIR BUILDING 4820 FLIGHT LOADS LABORATORY
POWER CONTROL UPGRADE

APPROVALS	DATE
Chief, Facilities Engineering & Assets Mgmt. Office	6-17-10
Project Manager	5-13-10
Safety Office	5/25/10
Project Requestor	5-17-10
Safety Office	6-1-10
Telecom	5/26/10

DRAWN BY	M. HENNIGH	DATE STRTD	09/17/08
W.O. #	95099	DATE PRNTD	04/26/10
PLOT SCALE	TRADE SH. No.	E-057	
CAD FILE NAME		SHEET No. 62 of 125	

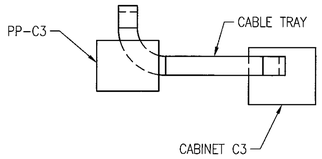

PP-C3 WITH CABLE TRAY ROUTING
TO CABINET-C3 - PLAN
SCALE: 1/4" = 1'-0"

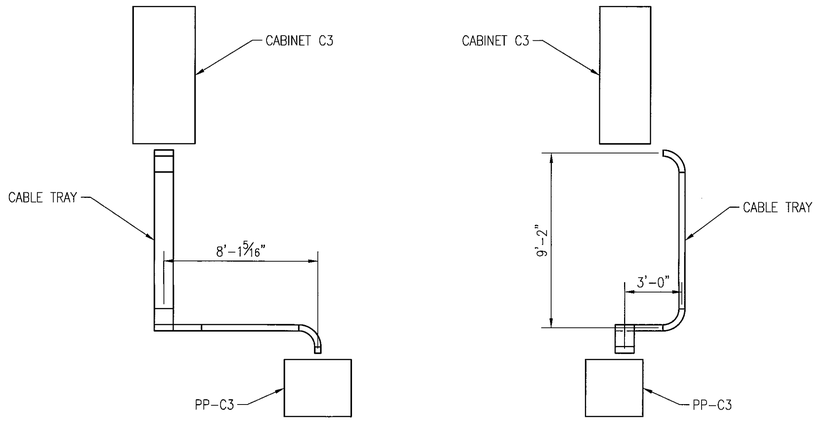

PP-C3 WITH CABLE TRAY ROUTING
TO CABINET-C3 - ELEVATION
SCALE: 1/4" = 1'-0"

BRIAN JEROME GARLAND
REGISTERED ENGINEER
AGRICULTURE
CIVIL
No. 113350
STATE OF TENNESSEE

DEVELOPMENT ONE, INC.
1611 East Fourth Street, Suite 250
Santa Ana, California 92701
J.Bruce Camino, Architect, AIA, NCARB
(714) 689-0298
(714) 648-0197 FAX

DATE	SYM	REVISION	BY	A'PD
10/19/09		100% FINAL DESIGN		

NATIONAL AERONAUTICS AND SPACE ADMINISTRATION
DRYDEN FLIGHT RESEARCH CENTER
EDWARDS, CA

DRAWING TITLE
480VAC CABLE TRAY
LOAD SIDE
PCC A3

PROJECT TITLE
REPAIR BUILDING 4820 FLIGHT LOADS LABORATORY
POWER CONTROL UPGRADE

APPROVALS	DATE
Chief, Facilities Engineering & Asset Mgmt. Office	6-17-10
Project Manager	5.13.10
Safety Office	5/20/10
Project Requestor	5.17.10
Safety Office	6-4-10
Telecom	5/26/10

DRAWN BY	M. HENNIGH	DATE STRTD	09/17/08
W.O. #	95099	DATE PRNTD	04/26/10
PLOT SCALE		TRADE SH. No.	E-058
CAD FILE NAME			

SHEET No. 63 of 125

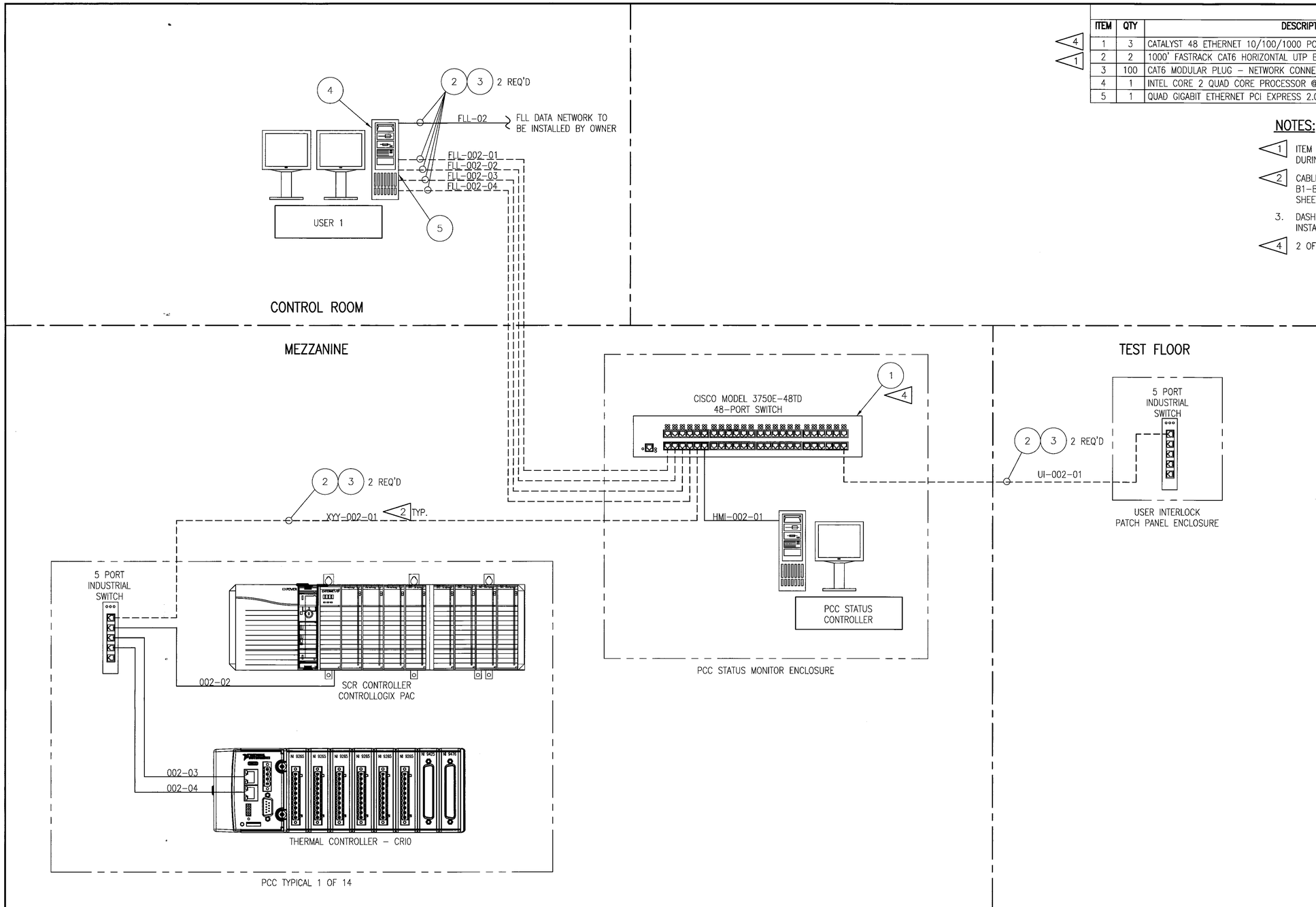

BILL OF MATERIAL

ITEM	QTY	DESCRIPTION	MANUFACTURER	PART NUMBER
1	3	CATALYST 48 ETHERNET 10/100/1000 PORTS & 2x2 10GB ETHERNET UPLINK	CISCO	3750E-48TD
2	2	1000' FASTRACK CAT6 HORIZONTAL UTP BULK CABLE, BLUE	BELKIN	A7L704-1000-BLU
3	100	CAT6 MODULAR PLUG - NETWORK CONNECTOR	BLACK BOX	FMTP6S-100PAK
4	1	INTEL CORE 2 QUAD CORE PROCESSOR @ 2.66GHZ 4 GB RAM	DELL OR EQUAL	T3400 OR EQUAL
5	1	QUAD GIGABIT ETHERNET PCI EXPRESS 2.0 ADAPTER	NETXEN	NX3-4GBT

NOTES:

1. ITEM 2 WILL BE CUT TO LENGTH AND TERMINATED WITH ITEM 3 DURING INSTALLATION.
2. CABLE NUMBERS WILL BE DESIGNATED BY PCC. XYY WILL BE A1-A5, B1-B6 OR C1-C3. INDIVIDUAL CABLE DESIGNATIONS SHOWN ON SHEET I-002.
3. DASHED WIRE SYMBOL INDICATES FIELD WIRING PROVIDED AND INSTALLED BY THE ELECTRICAL SUBCONTRACTOR.
4. 2 OF THE 3 SUPPLIED ETHERNET SWITCHES WILL BE SPARES.

WILLIAM L. CARPENTER JR. REGISTERED ENGINEER AGRICULTURE COMMERCE NO. 00022979 STATE OF TENNESSEE

DEVELOPMENT ONE, INC.
1611 East Fourth Street, Suite 250
Santa Ana, California 92701
J.Bruce Camino, Architect, AIA, NCARB
(714) 689-0298
(714) 648-0197 FAX

DATE	SYM	REVISION	BY	A'PD
10/19/09		100% FINAL DESIGN		

NATIONAL AERONAUTICS AND SPACE ADMINISTRATION
DRYDEN FLIGHT RESEARCH CENTER
EDWARDS, CA

DRAWING TITLE
POWER CONTROL CABINET (PCC)
SYSTEM NETWORK SCHEMATIC

PROJECT TITLE
REPAIR BUILDING 4820 FLIGHT LOADS LABORATORY
POWER CONTROL UPGRADE

APPROVALS	DATE
Chief, Facilities Engineering & Asset Mgmt. Office	6-17-10
Project Manager	5.13.10
Security Office	5/25/10
Project Requestor	5.17.10
Safety Office	6-1-10
Telecom	5/26/10

DRAWN BY	M. HENNIGH	DATE STRTD	09/17/08
W.O. #	95099	DATE PRNTD	04/26/10
PLOT SCALE		TRADE SH. No.	I-001
CAD FILE NAME			

SHEET No. 64 of 125

HUMAN-MACHINE INTERFACE (HMI) ENCLOSURE

PCC STATUS CONTROLLER IP ADDRESS 10.4.191.02

HMI-002-01

48 PORT ETHERNET SWITCH

PCC-A1 TYPE A 200 AMP ZERO FIRED 21 CHANNELS	PCC-A2 TYPE A 200 AMP ZERO FIRED 21 CHANNELS	PCC-A3 TYPE A 200 AMP ZERO FIRED 21 CHANNELS	PCC-A4 TYPE A 200 AMP ZERO FIRED 21 CHANNELS	PCC-A5 TYPE A 200 AMP ZERO FIRED 12 CHANNELS	PCC-B1 TYPE B 100 AMP ZERO FIRED 15 CHANNELS	PCC-B2 TYPE B 100 AMP ZERO FIRED 21 CHANNELS	PCC-B3 TYPE B 100 AMP ZERO FIRED 21 CHANNELS	PCC-B4 TYPE B 100 AMP ZERO FIRED 21 CHANNELS	PCC-B5 TYPE B 100 AMP ZERO FIRED 21 CHANNELS	PCC-B6 TYPE B 100 AMP ZERO FIRED 21 CHANNELS	PCC-C1 TYPE C 100 AMP PHASE CONTROL 18 CHANNELS	PCC-C2 TYPE C 100 AMP PHASE CONTROL 18 CHANNELS	PCC-C3 TYPE C 100 AMP PHASE CONTROL 12 CHANNELS
THERMAL CONTROLLER IP ADDRESS 10.4.191.03 10.4.191.04	THERMAL CONTROLLER IP ADDRESS 10.4.191.07 10.4.191.08	THERMAL CONTROLLER IP ADDRESS 10.4.191.11 10.4.191.12	THERMAL CONTROLLER IP ADDRESS 10.4.191.15 10.4.191.16	THERMAL CONTROLLER IP ADDRESS 10.4.191.19 10.4.191.20	THERMAL CONTROLLER IP ADDRESS 10.4.191.23 10.4.191.24	THERMAL CONTROLLER IP ADDRESS 10.4.191.27 10.4.191.28	THERMAL CONTROLLER IP ADDRESS 10.4.191.31 10.4.191.32	THERMAL CONTROLLER IP ADDRESS 10.4.191.35 10.4.191.36	THERMAL CONTROLLER IP ADDRESS 10.4.191.39 10.4.191.40	THERMAL CONTROLLER IP ADDRESS 10.4.191.43 10.4.191.44	THERMAL CONTROLLER IP ADDRESS 10.4.191.47 10.4.191.48	THERMAL CONTROLLER IP ADDRESS 10.4.191.51 10.4.191.52	THERMAL CONTROLLER IP ADDRESS 10.4.191.55 10.4.191.56
002-03	002-03	002-03	002-03	002-03	002-03	002-03	002-03	002-03	002-03	002-03	002-03	002-03	002-03
002-04	002-04	002-04	002-04	002-04	002-04	002-04	002-04	002-04	002-04	002-04	002-04	002-04	002-04
SCR CONTROLLER IP ADDRESS 10.4.191.05	SCR CONTROLLER IP ADDRESS 10.4.191.09	SCR CONTROLLER IP ADDRESS 10.4.191.13	SCR CONTROLLER IP ADDRESS 10.4.191.17	SCR CONTROLLER IP ADDRESS 10.4.191.21	SCR CONTROLLER IP ADDRESS 10.4.191.25	SCR CONTROLLER IP ADDRESS 10.4.191.29	SCR CONTROLLER IP ADDRESS 10.4.191.33	SCR CONTROLLER IP ADDRESS 10.4.191.37	SCR CONTROLLER IP ADDRESS 10.4.191.41	SCR CONTROLLER IP ADDRESS 10.4.191.45	SCR CONTROLLER IP ADDRESS 10.4.191.49	SCR CONTROLLER IP ADDRESS 10.4.191.53	SCR CONTROLLER IP ADDRESS 10.4.191.57
5 PORT ETHERNET SWITCH	5 PORT ETHERNET SWITCH	5 PORT ETHERNET SWITCH	5 PORT ETHERNET SWITCH	5 PORT ETHERNET SWITCH	5 PORT ETHERNET SWITCH	5 PORT ETHERNET SWITCH	5 PORT ETHERNET SWITCH	5 PORT ETHERNET SWITCH	5 PORT ETHERNET SWITCH	5 PORT ETHERNET SWITCH	5 PORT ETHERNET SWITCH	5 PORT ETHERNET SWITCH	5 PORT ETHERNET SWITCH
002-02	002-02	002-02	002-02	002-02	002-02	002-02	002-02	002-02	002-02	002-02	002-02	002-02	002-02

1

2

FLL-002-04
FLL-002-03
FLL-002-02
FLL-002-01
JIL-002-01

A1-002-01 A2-002-01 A3-002-01 A4-002-01 A5-002-01 B1-002-01 B2-002-01 B3-002-01 B4-002-01 B5-002-01 B6-002-01 C1-002-01 C2-002-01 C3-002-01

MEZZANINE

TEST FLOOR (BELOW MEZZANINE)

USER INTERLOCK PATCH PANEL

5 PORT ETHERNET SWITCH

TEST FLOOR NETWORK ACCESS THRU 5 PORT SWITCH IN USER INTERLOCK PATCH PANEL

TEST FLOOR (BELOW MEZZANINE)
CONTROL ROOM

PCC DATABASE CONTROLLER

FLL-002-01 — IP ADDRESS #1 = TBD BY FLL
FLL-002-02 — IP ADDRESS #2 = 10.4.191.61
FLL-002-03 — IP ADDRESS #3 = 10.4.191.62
FLL-002-04 — IP ADDRESS #4 = 10.4.191.63
IP ADDRESS #5 = 10.4.191.64

FLL-02 — **FLIGHT LOADS LAB DATA NETWORK TO BE INSTALLED BY OWNER**

NOTES:

1. ALL ETHERNET CABLES SHALL BE CAT6.
2. ALL INTERCONNECTING ETHERNET CABLES (DENOTED BY DASHED LINES) SHALL BE FIELD TERMINATED.

WILLIAM L. CARPENTER — REGISTERED ELECTRICAL ENGINEER — FACILITIES MGMT. — COMMERCIAL — NO. 0002978 — STATE OF TENNESSEE

DEVELOPMENT ONE, INC.
1611 East Fourth Street, Suite 250
Santa Ana, California 92701
J.Bruce Camino, Architect, AIA, NCARB
(714) 689-0298
(714) 648-0197 FAX

DATE	SYM	REVISION	BY	A'PD
10/19/09		100% FINAL DESIGN		

NATIONAL AERONAUTICS AND SPACE ADMINISTRATION

DRYDEN FLIGHT RESEARCH CENTER
EDWARDS, CA

DRAWING TITLE

PCC SYSTEM ETHERNET NETWORK IP ADDRESSES

PROJECT TITLE

REPAIR BUILDING 4820 FLIGHT LOADS LABORATORY POWER CONTROL UPGRADE

APPROVALS	DATE
Chief, Facilities Engineering & Asset Mgmt. Office	6-17-10
Project Manager	5-13-10
Safety Office	5/25/10
Project Resident	5-17-10
Safety Office	6-7-10
Telecom	5/26/10

DRAWN BY	M. HENNIGH	DATE STRTD	09/17/08
W.O. #	95099	DATE PRNTD	04/26/10
PLOT SCALE		TRADE Str. No.	I-002
CAD FILE NAME			SHEET No. 65 of 125

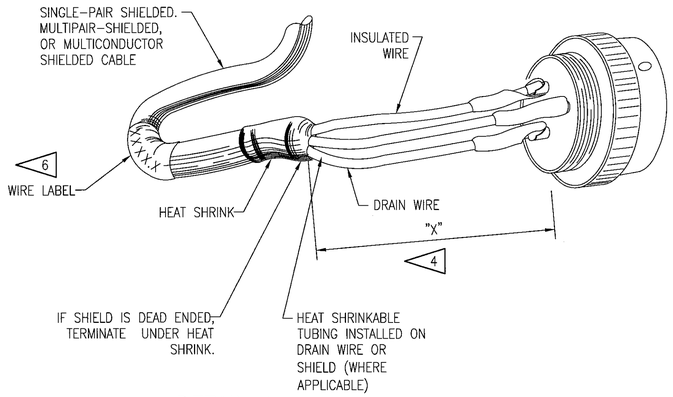

DETAIL 1

SCALE: N.T.S.
SOLDER TYPE CONNECTOR
TERMINATION DETAILS

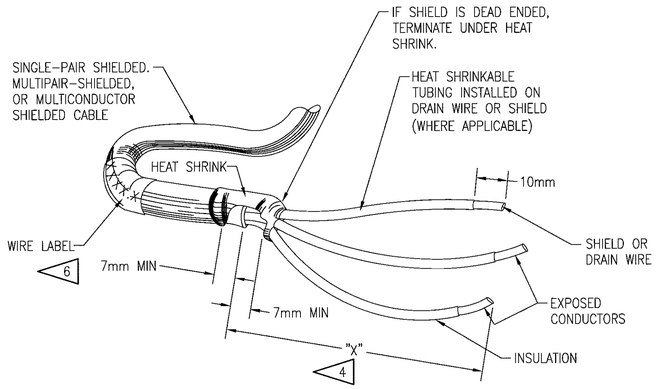

DETAIL 2

SCALE: N.T.S.
CABLE END PREPARATION
DETAILS FOR TERMINAL
BLOCKS AND
THERMOCOUPLES

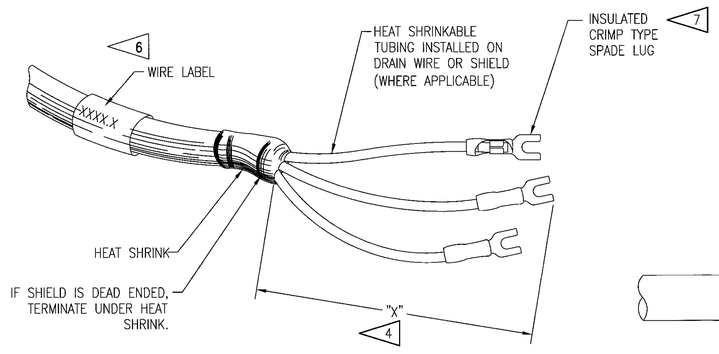

DETAIL 3

SCALE: N.T.S.
CABLE END PREPARATION DETAILS
FOR SCREW TERMINALS

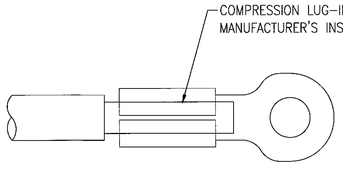

DETAIL 4

SCALE: N.T.S.

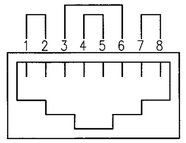

REAR VIEW OF
RJ–45
CONNECTOR

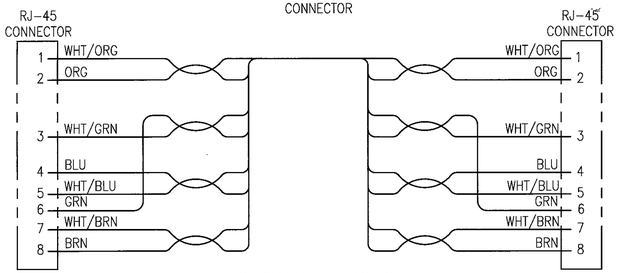

STRAIGHT THROUGH

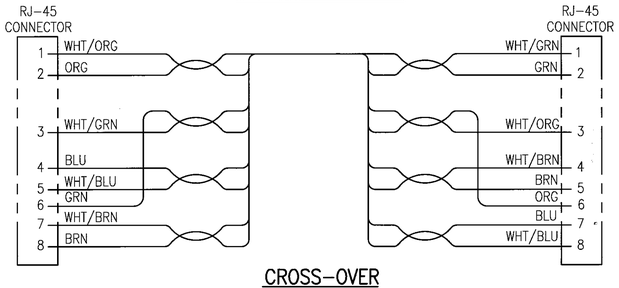

CROSS–OVER

TYPICAL NETWORK CABLE

DETAIL 5

SCALE: N.T.S.

NOTES:

1. THE ENDS OF WIRES WITH INTEGRAL INSULATION SHALL BE STRIPPED TO EXPOSE THE CONDUCTOR. THE CONDUCTOR SHALL NOT HAVE LOOSE, CUT, OR NICKED STRANDS. THE INSULATION SHALL NOT BE TORN OR FRAYED. STRIPPING SHALL BE ACCOMPLISHED WITH A SUITABLE COMMERCIAL STRIPPING TOOL EMPLOYING A METHOD TO CONTROL THE DEPTH OF CUT IN RELATION TO THE WIRE SIZE.
2. TERMINATION OF ALL CONDUCTORS ON SCREW–TYPE TERMINALS SHALL BE MADE WITH SLOTTED TONGUE (SPADE) PRE–INSULATED LUGS (T & B FORKED TYPE, INSULATED SLEEVE STA–KONS) OF THE PROPER SIZE FOR THE WIRE AND BINDING SCREW USED. LUGS SHALL BE SECURELY CRIMPED TO THE CONDUCTOR USING THE TOOL (T & B WT145C CRIMPING TOOL) AND TECHNIQUES RECOMMENDED BY THE MANUFACTURER OF THE LUGS. ALL WIRING IN TERMINAL BOXES OR EQUIPMENT CABINETS SHALL BE NEATLY ARRANGED USING CABLE TIES.
3. HEAT SHRINK SHALL BE 3M BRAND OR EQUAL.

4 ALL CABLES SHALL BE STRIPPED THE MINIMUM LENGTH TO MAINTAIN PROPER SHIELDING.

5. ADHESIVE WIRE LABEL SHALL HAVE CABLE IDENTIFICATION NUMBER PRE–TYPED WITH 3mm HIGH VERTICAL GOTHIC LETTERING.

6 APPLY LABEL TO BOTH ENDS OF CABLE.

7 PREPARE WIRE AS SHOWN IN DETAIL 2 BEFORE SOLDERING OR CRIMPING.

8. APPROPRIATE STRAIN RELIEF IS REQUIRED FOR ALL INSTRUMENTATION CABLE CONSTRUCTION AND INSTALLATION.

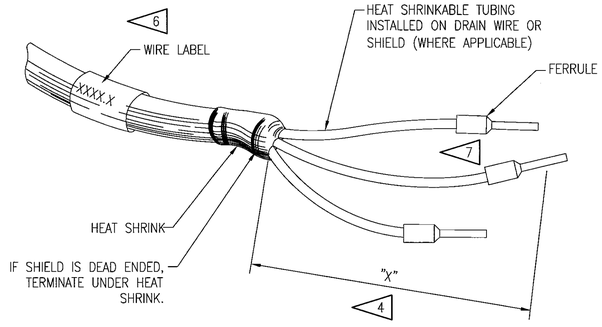

DETAIL 6

SCALE: N.T.S.
CABLE END PREPARATION DETAILS
FOR CAGE CLAMP TERMINALS

DEVELOPMENT ONE, INC.
1611 East Fourth Street, Suite 250
Santa Ana, California 92701
J.Bruce Camino, Architect, AIA, NCARB
(714) 689-0298
(714) 648-0197 FAX

WILLIAM L. CARPENTER
REGISTERED ENGINEER
SCIENTIFIC & COMMERCIAL
No. 0002978
STATE OF TENNESSEE

DATE	SYM	REVISION	BY	A'PD
10/19/09		100% FINAL DESIGN		

NATIONAL AERONAUTICS AND SPACE ADMINISTRATION
DRYDEN FLIGHT RESEARCH CENTER
EDWARDS, CA

DRAWING TITLE
CABLE TERMINATION
DETAILS

PROJECT TITLE
REPAIR BUILDING 4820 FLIGHT LOADS LABORATORY
POWER CONTROL UPGRADE

APPROVALS	DATE
Chief, Facilities Engineering & Asset Mgmt. Office	6-17-10
Project Manager	5.13.10
Security Office	5/25/10
Project Reviewer	5.17.10
Safety Office	6-1-10
Telecom	5/26/10

DRAWN BY	M. HENNIGH	DATE STRTD	09/17/08
W.O. #	95099	DATE PRNTD	04/26/10
PLOT SCALE	TRADE St. No.	I–005	
CAD FILE NAME		SHEET No. 66 of 125	

BILL OF MATERIAL

ITEM	QTY	DESCRIPTION	MANUFACTURER	PART NUMBER
1	1	CRIO-9022 REAL-TIME POWERPC CONTROLLER FOR CRIO, 2 GB STORAGE	NATIONAL INSTRUMENTS	780718-01
2	6	NI 9265 4-CH 20 MA, 100 KS/S/CH, 16-BIT, CURRENT AO MODULE	NATIONAL INSTRUMENTS	779334-01
3	6	NI 9932 BACKSHELL WITH 10-POS CONNECTOR BLOCK FOR 9265	NATIONAL INSTRUMENTS	779017-01
4	1	NI 9425 32-CH 24 V, 7 US, SINKING DI MODULE	NATIONAL INSTRUMENTS	779139-01
5	1	NI 9476 32-CH 24 V, 500 US, SOURCING DO MODULE	NATIONAL INSTRUMENTS	779140-01
6	2	NI 9933 37PIN D-SUB CONNECTOR KIT FOR 9245 & 9476	NATIONAL INSTRUMENTS	779103-01
7	1	PS-4 POWER SUPPLY, 24 VDC, UNIVERSAL POWER INPUT DIN RAIL MOUNT	NATIONAL INSTRUMENTS	778586-90
8	1	NI CRIO-9116 8-SLOT CHASSIS, LX85	NATIONAL INSTRUMENTS	780919-01
9	1	NI 9905 CHASSIS MOUNTING KIT	NATIONAL INSTRUMENTS	779558-01

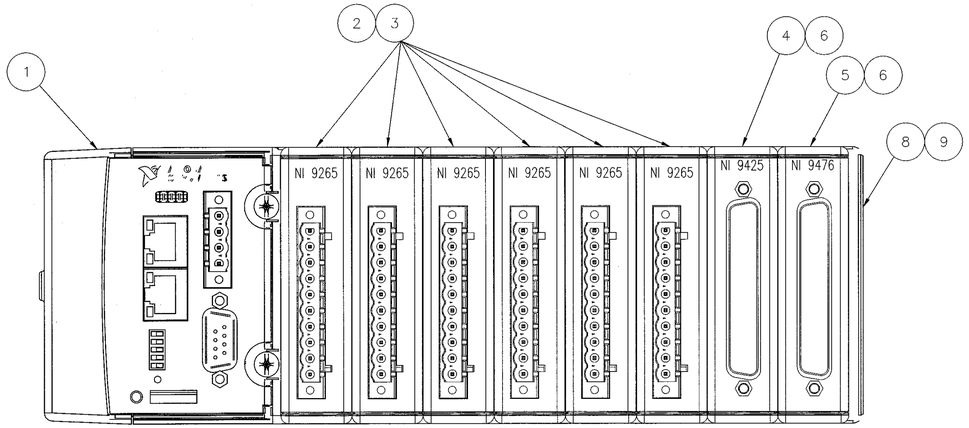

THERMAL CONTROLLER
COMPACT RECONFIGURABLE I/O (cRIO) CHASSIS

WILLIAM L. CARPENTER
REGISTERED ENGINEER
COMMERCE
NO. 00022979
STATE OF TENNESSEE

DEVELOPMENT ONE, INC.
1611 East Fourth Street, Suite 250
Santa Ana, California 92701
J.Bruce Camino, Architect, AIA, NCARB
(714) 689-0298
(714) 648-0197 FAX

DATE	SYM	REVISION	BY	A'PD
10/19/09		100% FINAL DESIGN		

NATIONAL AERONAUTICS AND SPACE ADMINISTRATION
DRYDEN FLIGHT RESEARCH CENTER
EDWARDS, CA

DRAWING TITLE
PCC THERMAL CONTROLLER
TYPICAL – CHASSIS LAYOUT

PROJECT TITLE
REPAIR BUILDING 4820 FLIGHT LOADS LABORATORY
POWER CONTROL UPGRADE

APPROVALS	DATE
Chief, Facilities Engineering & Asset Mgmt. Office	6-17-10
Project Manager	6-17-10
Security Office	6/17/10
Project Engineer	6-17-10
Safety Office	6/17/10
Telecom	6/17/10

DRAWN BY	M. HENNIGH	DATE STRTD	09/17/08
W.O. #	95099	DATE PRNTD	04/26/10
PLOT SCALE		TRADE SH. No.	I-010
CAD FILE NAME			

SHEET No. 67 of 125

NOTES:

1. ALL I/O SIGNAL WIRING SHALL BE BELDEN 8760 (#18AWG TWISTED, SHIELDED PAIR).
2. UNLESS OTHERWISE NOTED, ALL WIRING SHALL BE #16AWG.

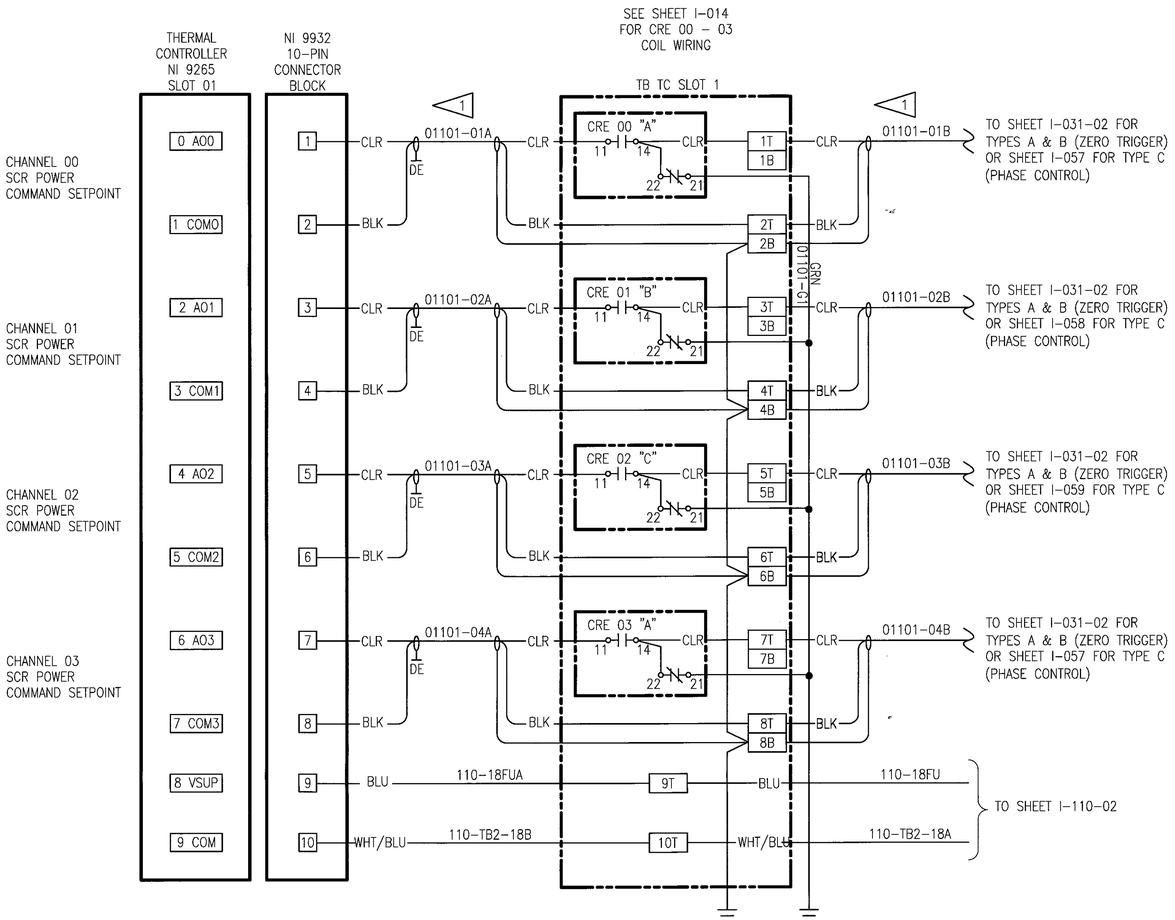

SEE SHEET I-105 PCC TYPES A & B (ZERO TRIGGER)
OR
I-106 PCC TYPE C (PHASE CONTROL)
TB TC SLOT 1
RELAY AND
TERMINAL BLOCK LAYOUT

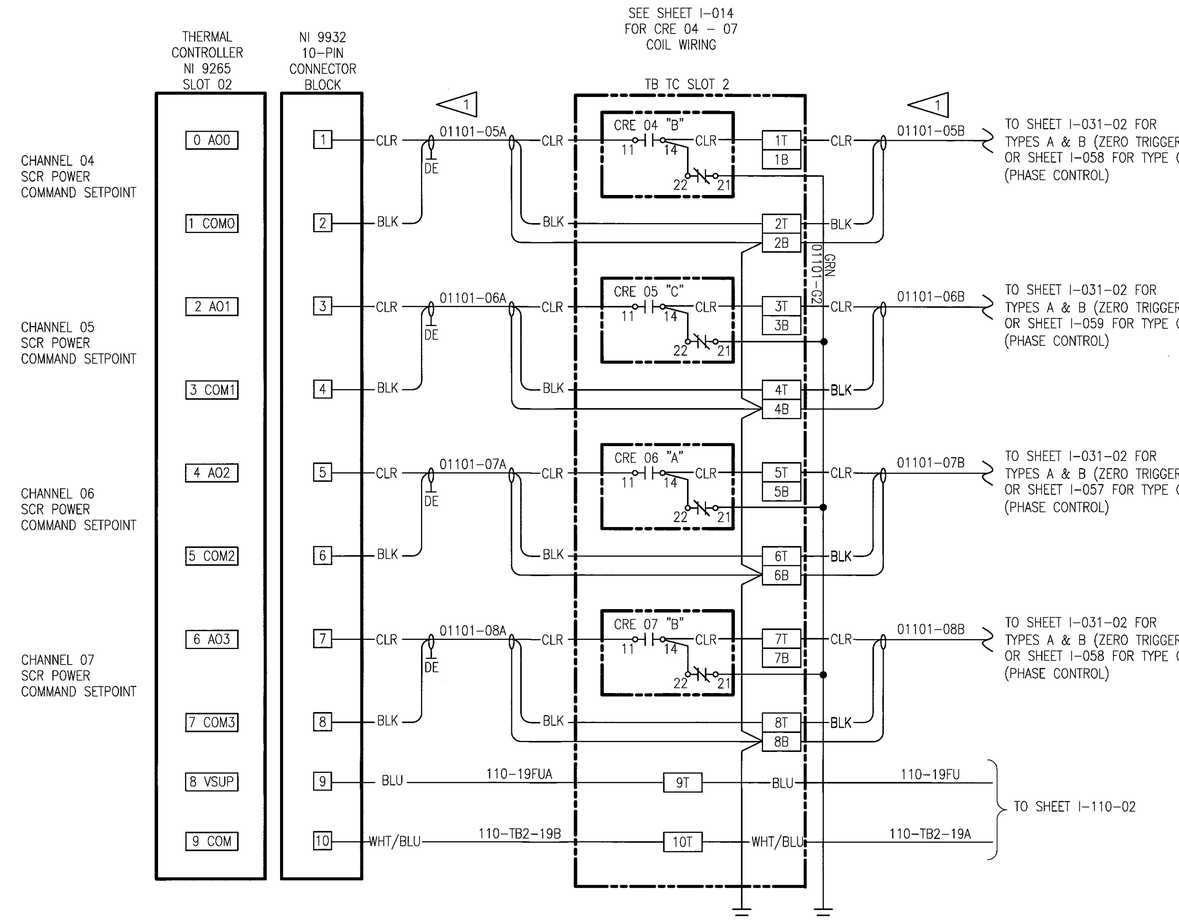

SEE SHEET I-105 PCC TYPES A & B (ZERO TRIGGER)
OR
I-106 PCC TYPE C (PHASE CONTROL)
TB TC SLOT 2
RELAY AND
TERMINAL BLOCK LAYOUT

WILLIAM L. CARPENTER
REGISTERED ENGINEER
No. 0002378
COMMONWEALTH OF TENNESSEE
STATE OF TENNESSEE

DEVELOPMENT ONE, INC.
1611 East Fourth Street, Suite 250
Santa Ana, California 92701
J.Bruce Camino, Architect, AIA, NCARB
(714) 689-0298
(714) 648-0197 FAX

DATE	SYM.	REVISION	BY	A'PD
10/19/09		100% FINAL DESIGN		

NATIONAL AERONAUTICS AND SPACE ADMINISTRATION
DRYDEN FLIGHT RESEARCH CENTER
EDWARDS, CA

DRAWING TITLE
PCC THERMAL CONTROLLER ANALOG OUTPUTS TYPICAL (SHEET 1)

PROJECT TITLE
REPAIR BUILDING 4820 FLIGHT LOADS LABORATORY POWER CONTROL UPGRADE

APPROVALS	DATE
Chief, Facilities Engineering & Asset Mgmt. Office	6-17-10
Project Manager	5-13-10
Safety Office	5/25/10
Project Engineer	5-17-10
Safety Office	6-1-10
Telecom	5/26/10

DRAWN BY	M. HENNIGH	DATE STRTD	09/17/08
W.O. #	95099	DATE PRNTD	04/26/10
PLOT SCALE		TRADE SH. No.	I-011-01
CAD FILE NAME			SHEET No. 68 of 125

NOTES:

1. ALL I/O SIGNAL WIRING SHALL BE BELDEN 8760 (#18AWG TWISTED, SHIELDED PAIR).
2. UNLESS OTHERWISE NOTED, ALL WIRING SHALL BE #16AWG.
3. PCC A1 & C3 WILL CONTAIN ONLY 12 CHANNELS (0 – 11),
4. PCC B1 WILL CONTAIN ONLY 15 CHANNELS (0 – 14).

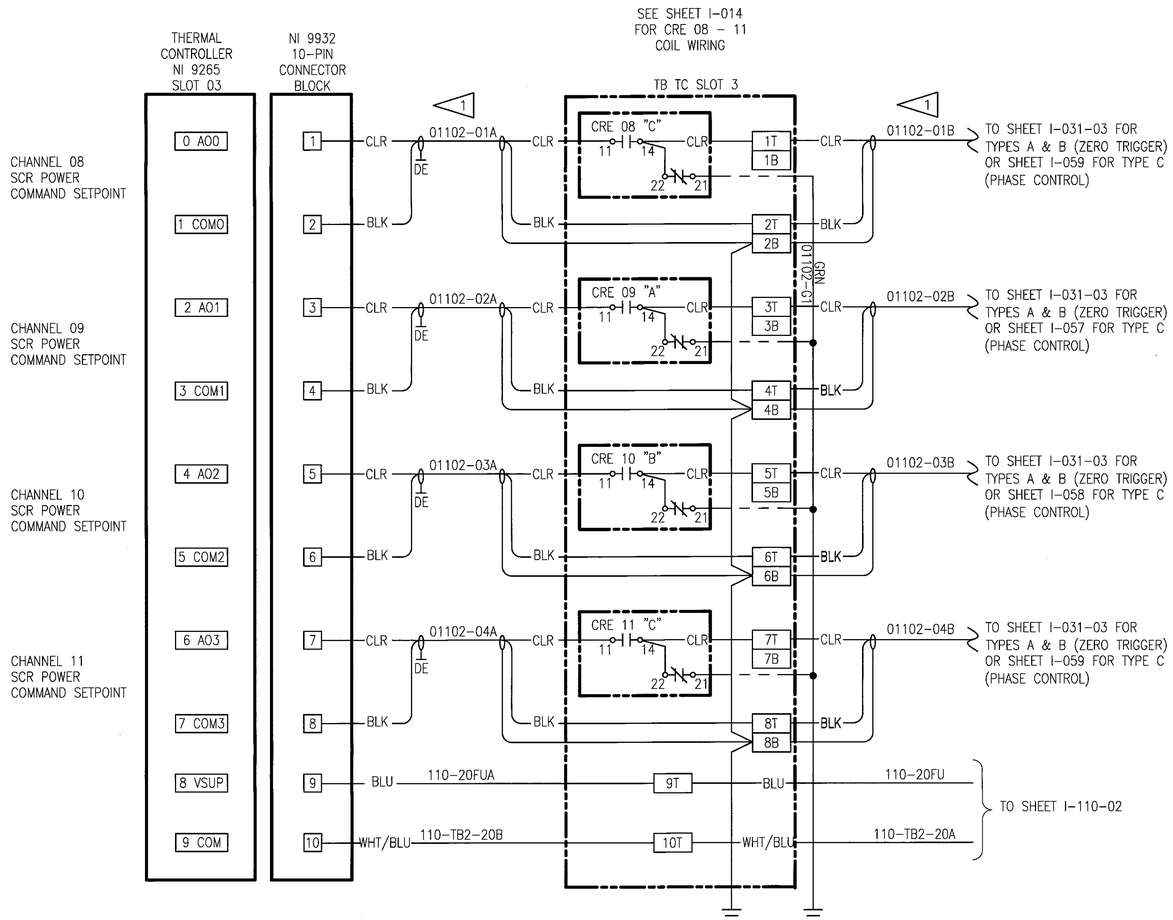

SEE SHEET I-105 PCC TYPES A & B (ZERO TRIGGER)
OR
I-106 PCC TYPE C (PHASE CONTROL)
TB TC SLOT 3
RELAY AND
TERMINAL BLOCK LAYOUT

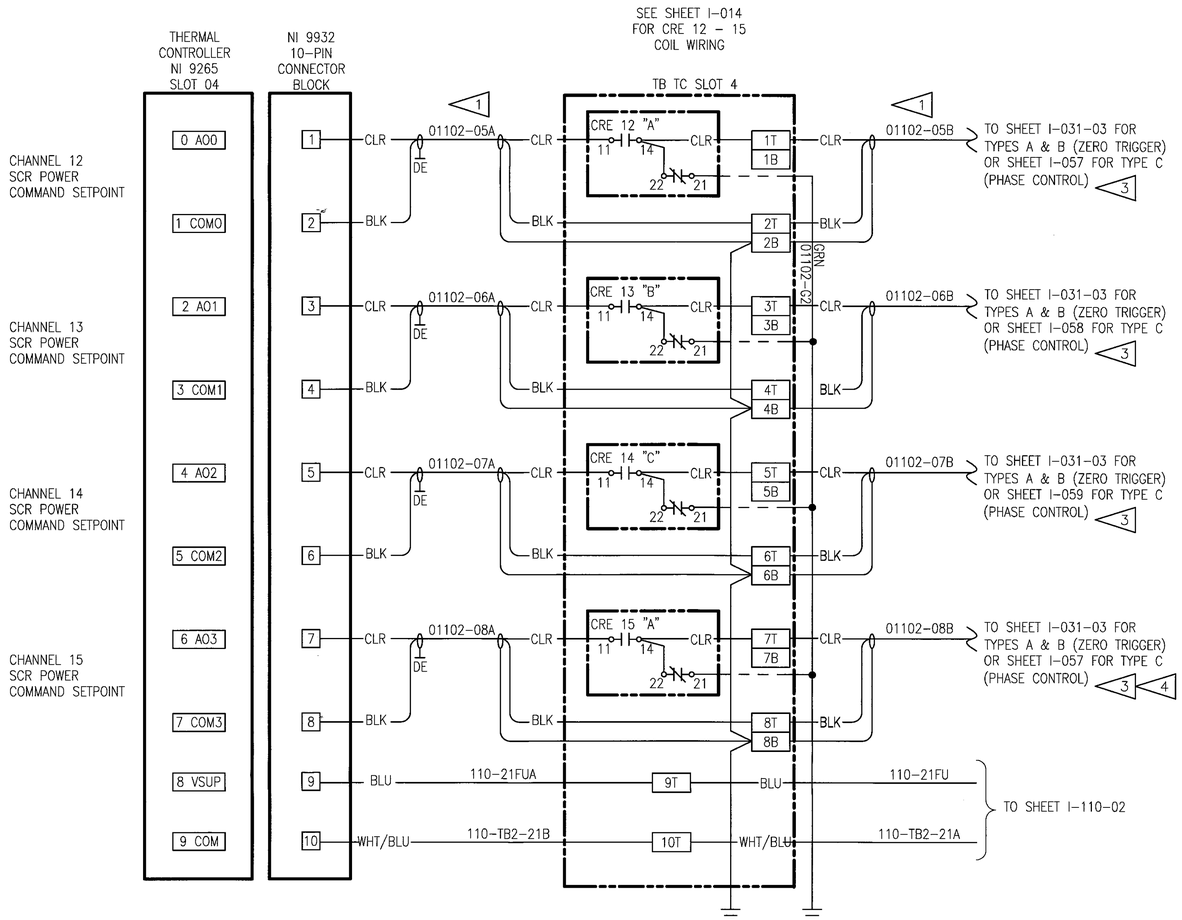

SEE SHEET I-105 PCC TYPES A & B (ZERO TRIGGER)
OR
I-106 PCC TYPE C (PHASE CONTROL)
TB TC SLOT 4
RELAY AND
TERMINAL BLOCK LAYOUT

WILLIAM L. CARPENTER
REGISTERED ENGINEER
No. 0002979
COMMERCIAL
STATE OF TENNESSEE

DEVELOPMENT ONE, INC.
1611 East Fourth Street, Suite 250
Santa Ana, California 92701
J.Bruce Camino, Architect, AIA, NCARB
(714) 689-0298
(714) 648-0197 FAX

DATE	SYM	REVISION	BY	A'PD
10/19/09		100% FINAL DESIGN		

NATIONAL AERONAUTICS AND SPACE ADMINISTRATION
DRYDEN FLIGHT RESEARCH CENTER
EDWARDS, CA

DRAWING TITLE
PCC THERMAL CONTROLLER
ANALOG OUTPUTS
TYPICAL (SHEET 2)

PROJECT TITLE
REPAIR BUILDING 4820 FLIGHT LOADS LABORATORY
POWER CONTROL UPGRADE

APPROVALS	DATE
Chief, Facilities Engineering & Asset Mgmt. Office	6-17-10
Project Manager	5.13.10
Safety Office	5/25/10
Project Regulator	5.17.10
Safety Office	6-4-10
Telecom	5/24/10

DRAWN BY	M. HENNIGH	DATE STRTD	09/17/08
W.O. #	95099	DATE PRNTD	04/26/10
PLOT SCALE		TRADE SH. No.	I-011-02
CAD FILE NAME		SHEET No.	69 of 125

NOTES:

1. ALL I/O SIGNAL WIRING SHALL BE BELDEN 8760 (18 AWG TWISTED, SHIELDED PAIR).
2. ALL 24VDC POWER WIRING SHALL BE 16AWG.
3. PCC A1 & C3 WILL CONTAIN ONLY 12 CHANNELS (0 – 11),
4. PCC B1 WILL CONTAIN ONLY 15 CHANNELS (0 – 14).
5. PCC C1 AND C2 WILL CONTAIN ONLY 18 CHANNELS (0 – 17).

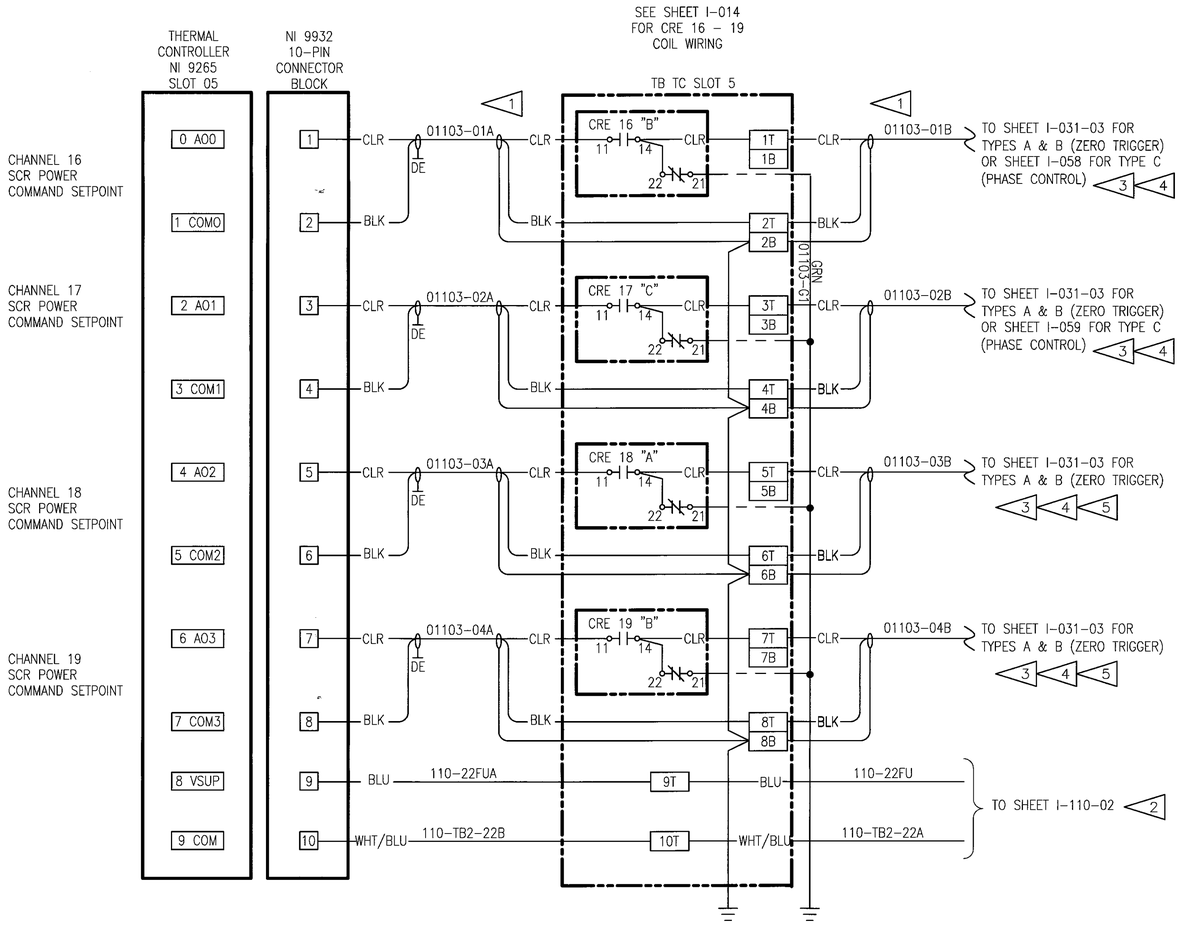

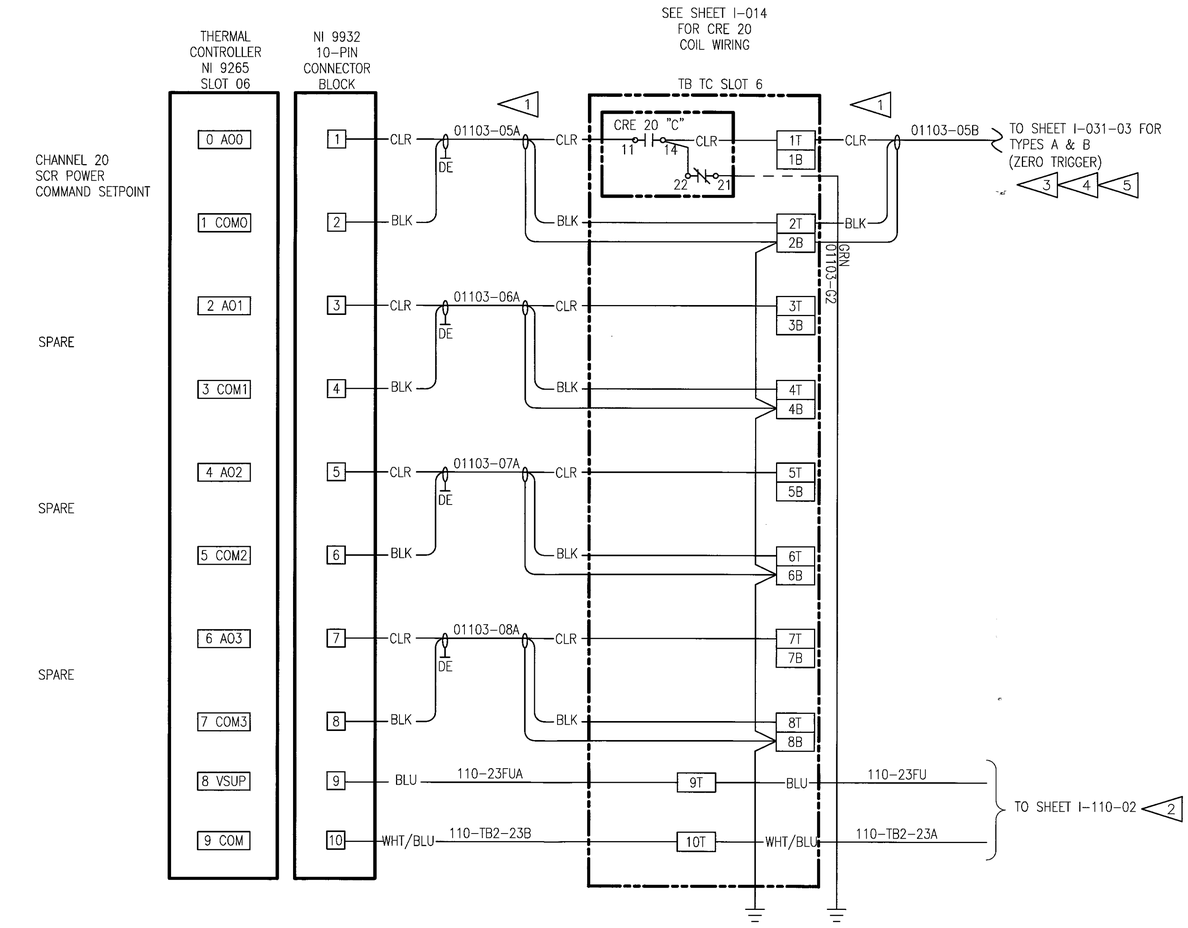

WILLIAM L. CARPENTER II — REGISTERED ENGINEER — STATE OF TENNESSEE — No. 0002979

DEVELOPMENT ONE, INC.
1611 East Fourth Street, Suite 250
Santa Ana, California 92701
J.Bruce Camino, Architect, AIA, NCARB
(714) 689-0298
(714) 648-0197 FAX

DATE	SYM	REVISION	BY	A'PD
10/19/09		100% FINAL DESIGN		

NATIONAL AERONAUTICS AND SPACE ADMINISTRATION
DRYDEN FLIGHT RESEARCH CENTER
EDWARDS, CA

DRAWING TITLE
PCC THERMAL CONTROLLER ANALOG OUTPUTS TYPICAL (SHEET 3)

PROJECT TITLE
REPAIR BUILDING 4820 FLIGHT LOADS LABORATORY POWER CONTROL UPGRADE

APPROVALS	DATE
Chief Facilities Engineering & Asset Mgmt. Office	6-17-10
Project Manager	5-13-10
Security Office	5/25/10
Project Inspector	5-17-10
Safety Office	6-1-10
Telecom	5/26/10

DRAWN BY	M. HENNICH	DATE STRTD	09/17/08
W.O. #	95099	DATE PRNTD	04/26/10
PLOT SCALE		TRADE SH. No.	I–011–03
CAD FILE NAME			SHEET No. 70 of 125

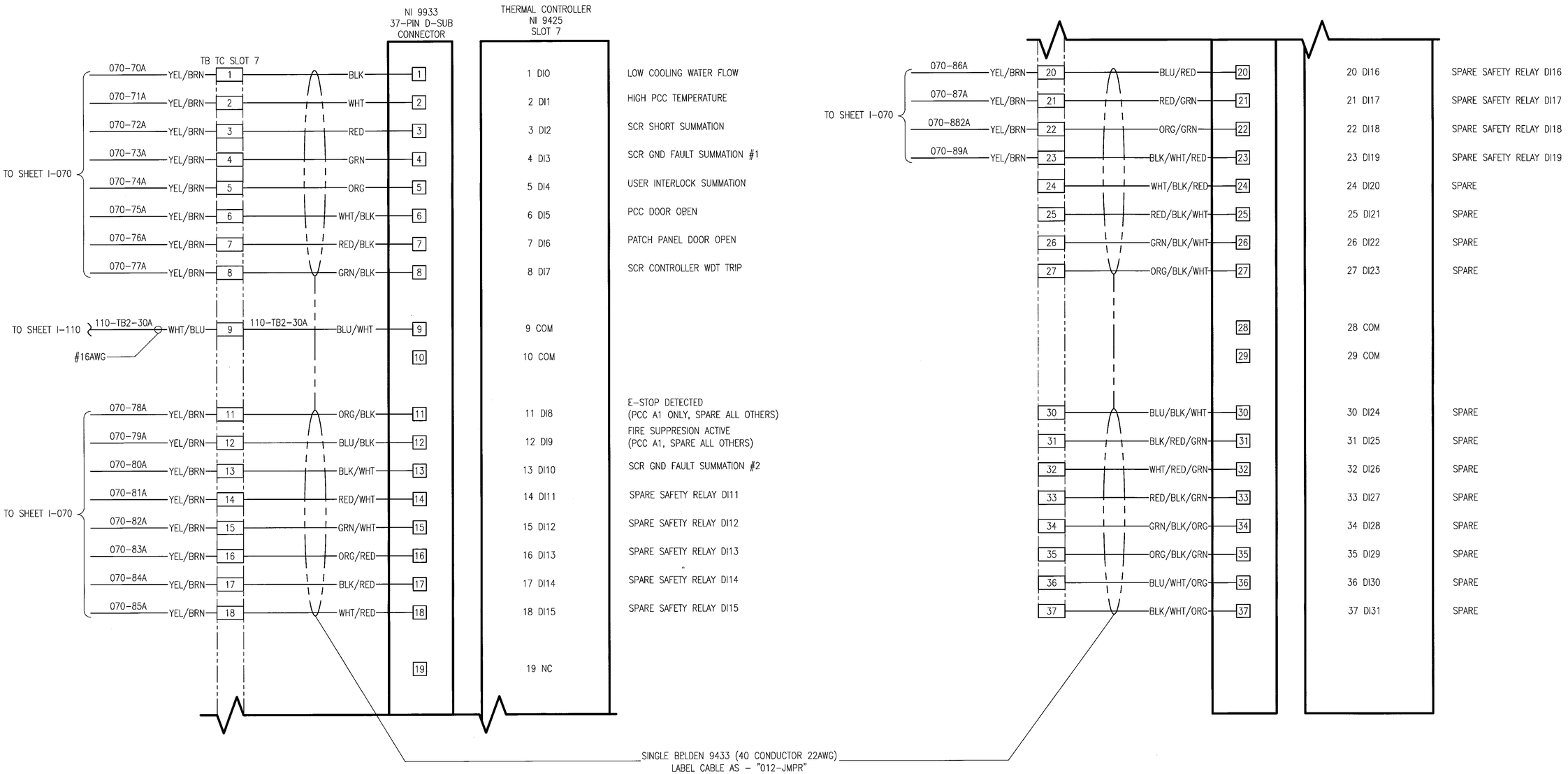

WILLIAM L. CARPENTER
REGISTERED ENGINEER
AGRICULTURE
COMMERCE
NO. 00022979
STATE OF TENNESSEE

DEVELOPMENT ONE, INC.
1611 East Fourth Street, Suite 250
Santa Ana, California 92701
J.Bruce Camino, Architect, AIA, NCARB
(714) 689-0298
(714) 648-0197 FAX

DATE	SYM	REVISION	BY	A'PD
10/19/09		100% FINAL DESIGN		

NATIONAL AERONAUTICS AND SPACE ADMINISTRATION
DRYDEN FLIGHT RESEARCH CENTER
EDWARDS, CA

DRAWING TITLE
PCC THERMAL CONTROLLER
DIGITAL INPUTS
TYPICAL

PROJECT TITLE
REPAIR BUILDING 4820 FLIGHT LOADS LABORATORY
POWER CONTROL UPGRADE

APPROVALS	DATE
Chief, Facilities Engineering & Asset Mgmt. Office	6-17-10
Project Manager	5.13.10
Security Office	5/25/10
Project Requestor	5-22-10
Safety Office	6-1-10
Telecom	5/26/10

DRAWN BY	M. HENNIGH	DATE STRTD	09/17/08
W.O. #	95099	DATE PRNTD	04/26/10
PLOT SCALE		TRADE SH. No.	I-012
CAD FILE NAME			

SHEET No. 71 of 125

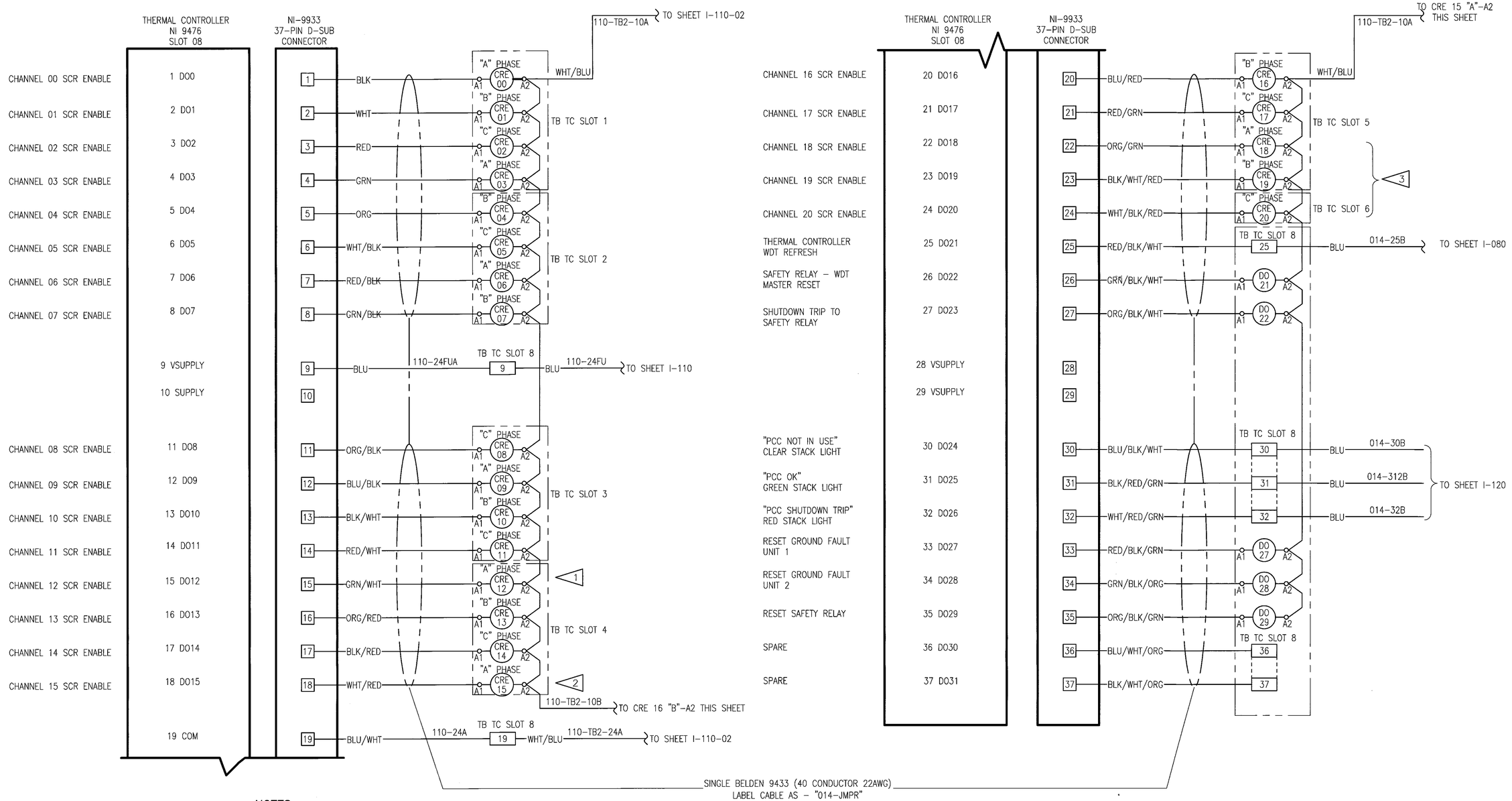

NOTES:

1. PCC A5 AND PCC C3 WILL CONTAIN ONLY 12 CHANNELS (0-11).
2. PCC B1 WILL CONTAIN ONLY 15 CHANNELS (0-14).
3. TYPE C (PHASE CONTROL) DOES NOT USE CHANNELS 18 -20 AND WIRES WILL BE LANDED ON TERMINALS TB TC SLOT 8. SEE SHEET I-106 FOR T.B. LAYOUT.
4. SEE SHEET I-105 (ZERO TRIGGER) OR SHEET I-106 (PHASE CONTROL) FOR RELAY AND TERMINAL BLOCK LAYOUTS.
5. UNLESS OTHERWISE NOTED, ALL WIRING SHALL BE #16AWG.
6. SEE SHEET I-011-01 THRU I-011-03 FOR SCR ENABLE RELAY CONTACT WIRING.

WILLIAM L. CARPENTER REGISTERED ENGINEER STATE OF TENNESSEE NO. 00022978

DEVELOPMENT ONE, INC.
1611 East Fourth Street, Suite 250
Santa Ana, California 92701
J.Bruce Camino, Architect, AIA, NCARB
(714) 689-0298
(714) 648-0197 FAX

DATE	SYM	REVISION	BY	A'PD
10/19/09		100% FINAL DESIGN		

NATIONAL AERONAUTICS AND SPACE ADMINISTRATION
DRYDEN FLIGHT RESEARCH CENTER
EDWARDS, CA

DRAWING TITLE
PCC THERMAL CONTROLLER DIGITAL OUTPUTS DETAILS

PROJECT TITLE
REPAIR BUILDING 4820 FLIGHT LOADS LABORATORY POWER CONTROL UPGRADE

APPROVALS	DATE
Chief, Facilities Engineering & Asset Mgmt. Office	6-17-10
Project Manager	5/13/10
Security Office	5/24/10
Project Requestor	5-22-10
Safety Office	6/1/10
Telecom	5/26/10

DRAWN BY	M. HENNIGH	DATE STRTD	09/17/08
W.O. #	95099	DATE PRNTD	04/26/10
PLOT SCALE		TRADE SH. No.	I-014
CAD FILE NAME			SHEET No. 72 of 125

NOTE:

1. SWING OUT PANELS NOT SHOWN INSIDE BACK VIEW OF ENCLOSURE FOR CLARITY.

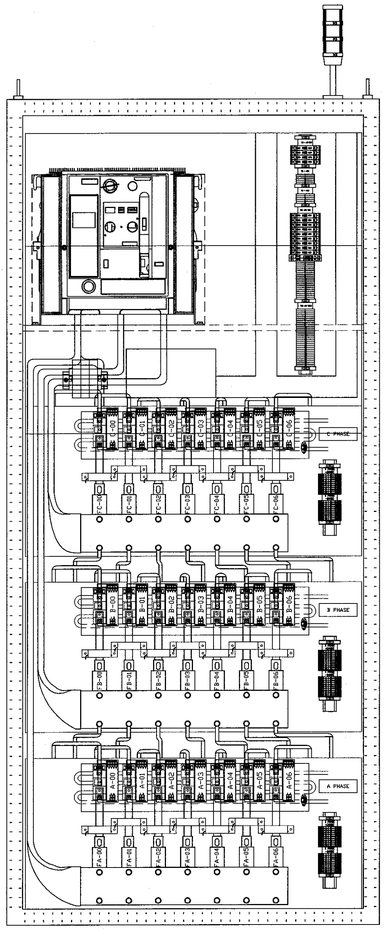

FRONT VIEW W/DOOR OFF
SCALE: 1:8

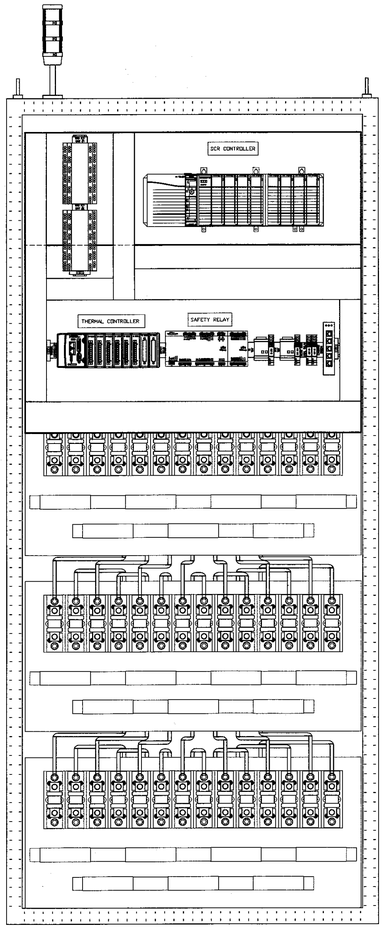

BACK VIEW W/DOOR OFF
SCALE: 1:8

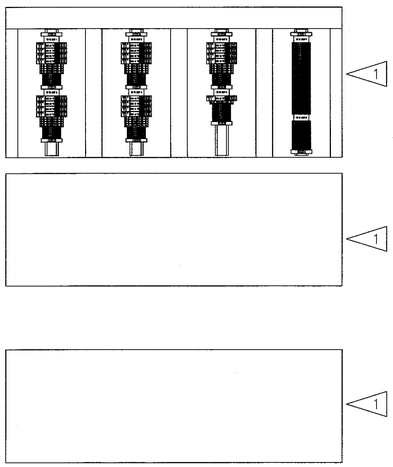

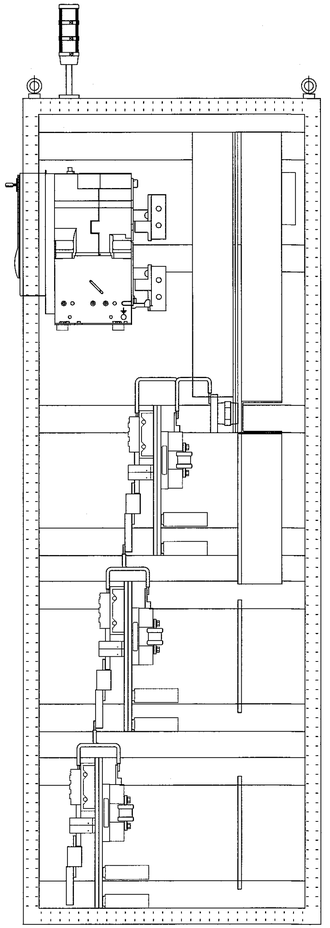

RIGHT SIDE VIEW W/PANEL OFF
SCALE: 1:8

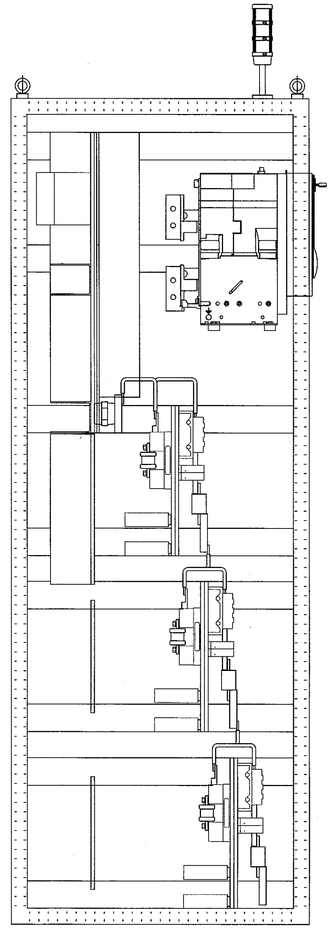

LEFT SIDE VIEW W/PANEL OFF
SCALE: 1:8

DEVELOPMENT ONE, INC.
1611 East Fourth Street, Suite 250
Santa Ana, California 92701
J.Bruce Camino, Architect, AIA, NCARB
(714) 689-0298
(714) 648-0197 FAX

WILLIAM L. CARPENTER
REGISTERED ENGINEER
No. 00022813
STATE OF TENNESSEE

DATE	SYM	REVISION	BY	A'PD
10/19/09		100% FINAL DESIGN		

NATIONAL AERONAUTICS AND SPACE ADMINISTRATION
DRYDEN FLIGHT RESEARCH CENTER
EDWARDS, CA

DRAWING TITLE
PCC TYPE A 200-AMP
ZERO FIRED SCR
CABINET LAYOUT (SHEET 1)

PROJECT TITLE
REPAIR BUILDING 4820 FLIGHT LOADS LABORATORY
POWER CONTROL UPGRADE

APPROVALS	DATE
Chief, Facilities Engineering & Asset Mgmt. Office	6-17-10
Project Manager	6-17-10
Safety Office	6/17/10
Project Engineer	6-17-10
Safety Office	6/17/10
Telecom	6/17/10

DRAWN BY	M. HENNIGH	DATE STRTD	09/17/08
W.O. #	95099	DATE PRINTD	04/26/10
PLOT SCALE		TRADE SH. No.	I-020-01
CAD FILE NAME			

SHEET No. 73 of 125

NOTE:

1. BLANK SWING-OUT PANELS NOT SHOWN FOR CLARITY (SEE DRAWING I-020-01).

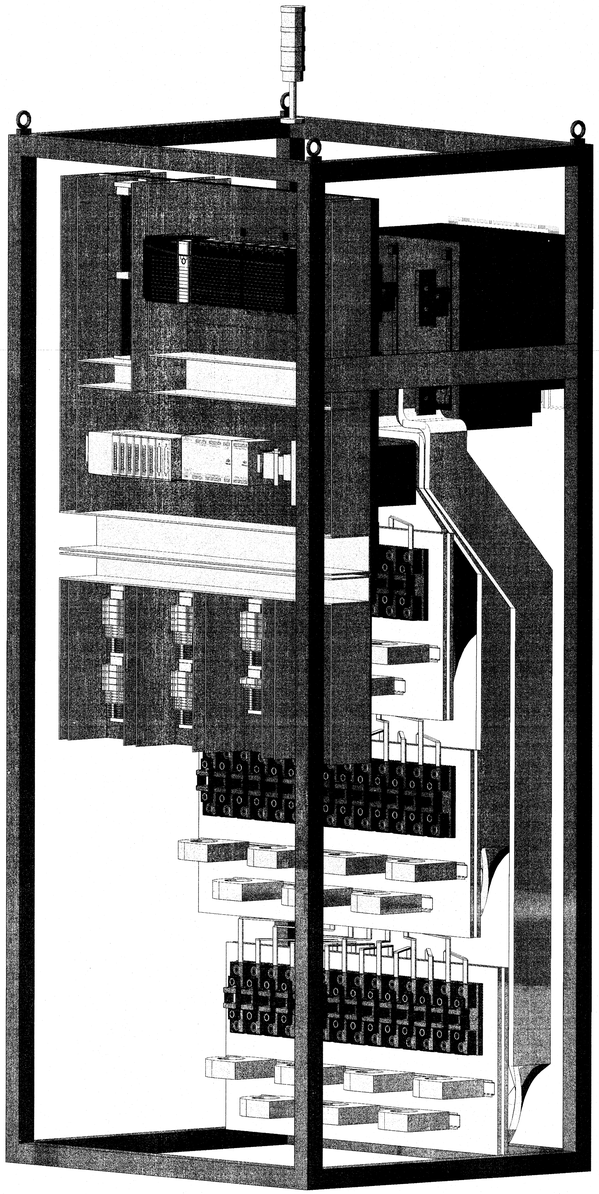

REAR LEFT VIEW
SCALE: 5/32

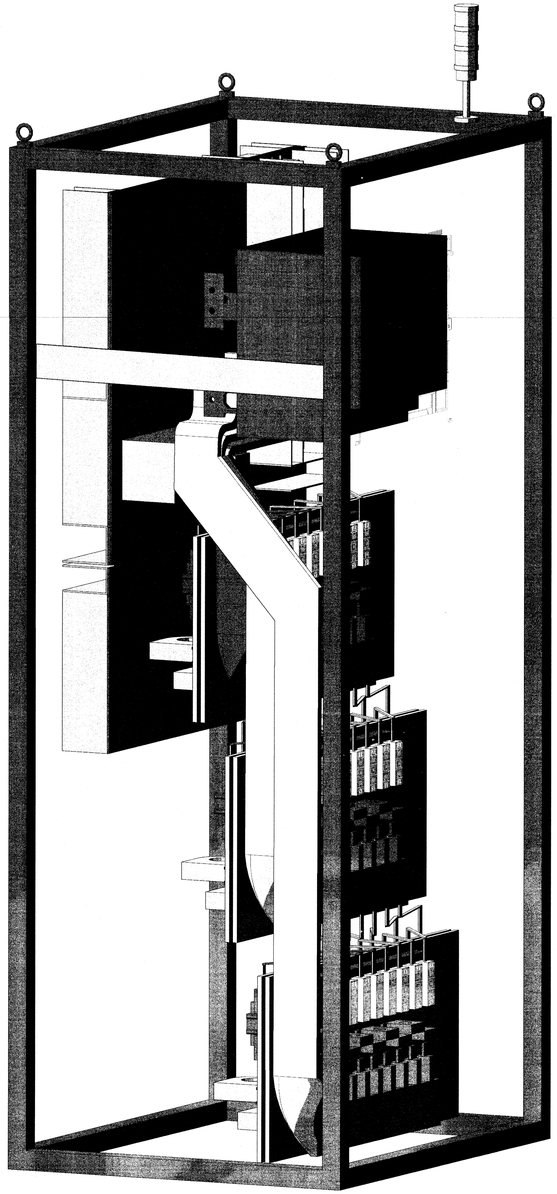

FRONT LEFT VIEW
SCALE: 5/32

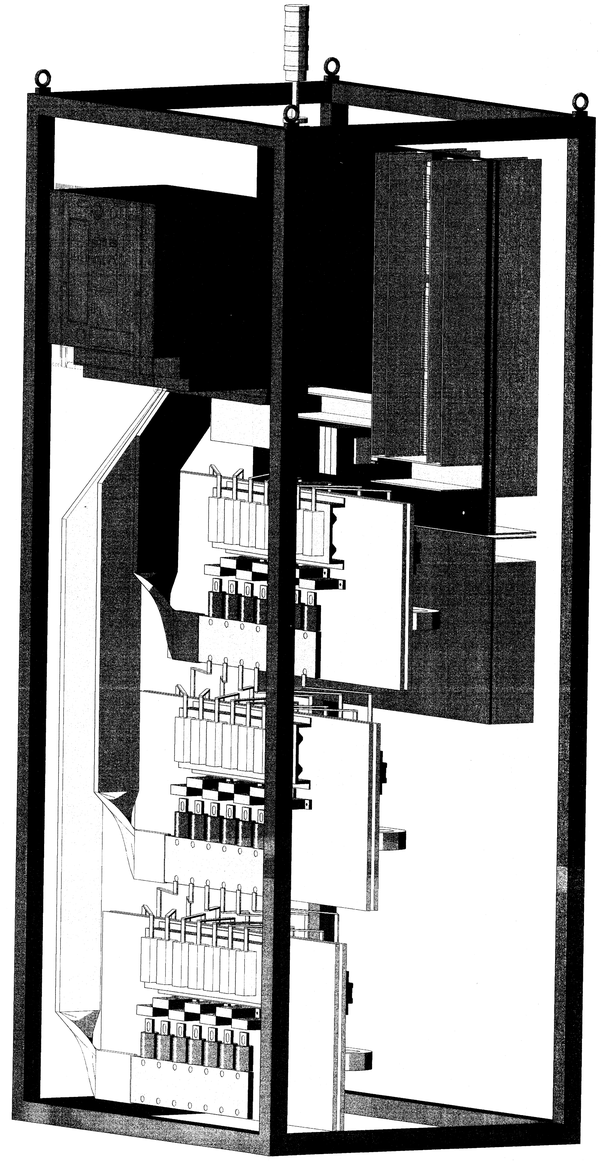

FRONT RIGHT VIEW
SCALE: 5/32

WILLIAM L. CARPENTER, JR.
REGISTERED ENGINEER
COMMERCE
NO. 00022979
STATE OF TENNESSEE

DEVELOPMENT ONE, INC.
1611 East Fourth Street, Suite 250
Santa Ana, California 92701
J.Bruce Camino, Architect, AIA, NCARB
(714) 689-0298
(714) 648-0197 FAX

DATE	SYM	REVISION	BY	A'PD
10/19/09		100% FINAL DESIGN		

NATIONAL AERONAUTICS AND SPACE ADMINISTRATION
DRYDEN FLIGHT RESEARCH CENTER
EDWARDS, CA

DRAWING TITLE
PCC TYPE A 200-AMP
ZERO FIRED SCR
CABINET LAYOUT (SHEET 2)

PROJECT TITLE
REPAIR BUILDING 4820 FLIGHT LOADS LABORATORY
POWER CONTROL UPGRADE

APPROVALS	DATE
Chief, Facilities Engineering & Asset Mgmt. Office: Dan Crowley	6-17-10
Project Manager: Marcelle M. Nelson	6-17-10
Security Office: [signature]	6/17/10
Project Requestor: Thomas F. Horn	6-17-10
Safety Office: Daniel F. Mullen	6/17/10
Telecom: [signature]	6/17/10

DRAWN BY	M. HENNIGH	DATE STRTD	09/17/08
W.O. #	95099	DATE PRNTD	04/26/10
PLOT SCALE		TRADE SH. No.	I-020-02
CAD FILE NAME			

SHEET No. 74 of 125

NOTES:

1. EQUIPMENT SHOWN IS TYPE A, 200-AMP. THIS IS THE MAXIMUM SIZE EQUIPMENT TO BE INSTALLED.
2. THERE WILL BE 5 TYPE A ASSEMBLIES AND THE TOTAL QUANTITIES ARE SHOWN.
3. THERE WILL BE 6 TYPE B ASSEMBLIES AND THE TOTAL QUANTITIES ARE SHOWN.
4. THERE WILL BE 3 TYPE C ASSEMBLIES AND THE TOTAL QUANTITIES ARE SHOWN.
5. E-STOP PUSHBUTTON MOUNTED TO FRONT DOOR OF ENCLOSURE A1 ONLY.

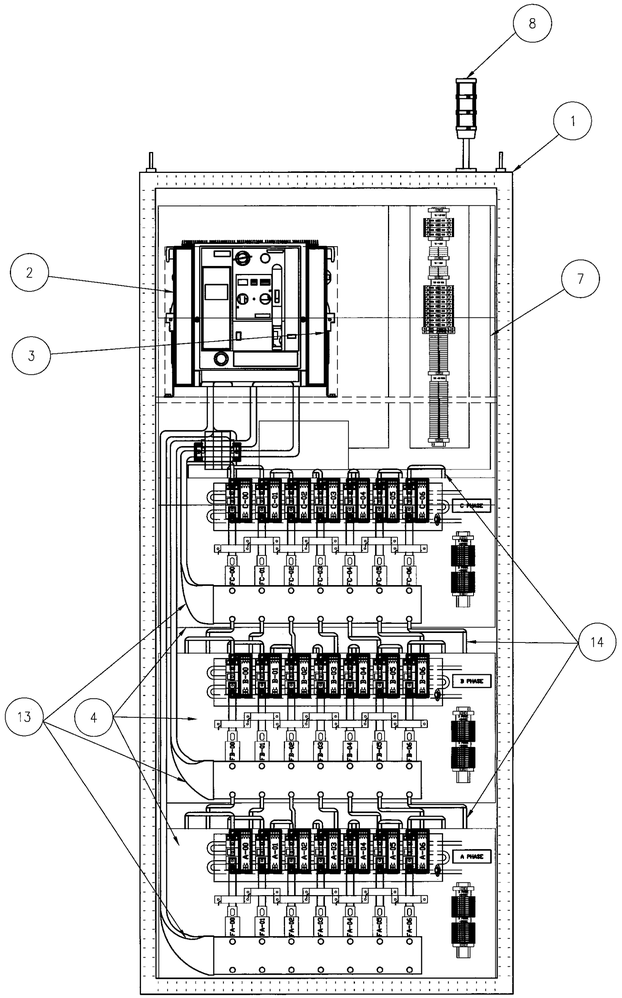

FRONT VIEW W/DOOR OFF
SCALE: 1:8

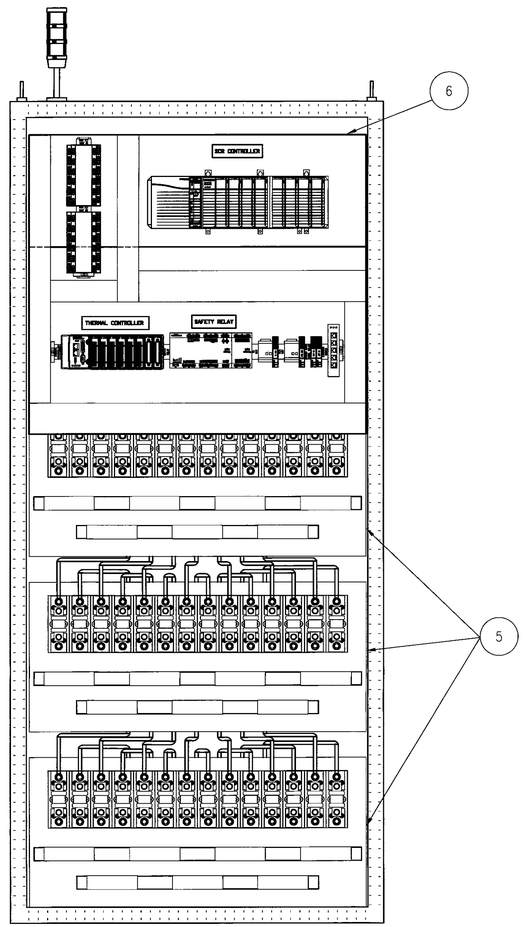

BACK VIEW W/DOOR OFF
SCALE: 1:8

PCC TYPE A – BILL OF MATERIALS

ITEM	QTY	DESCRIPTION	MANUFACTURER	PART NUMBER
1	5	ENCLOSURE (2200 x 1000 x 800mm)	RITTAL	CUSTOM – 8028500
2	5	MOTOR-OPERATED CIRCUIT BREAKER	SIEMENS	WL-L2F325VD3AA2ABA
3	30	LUGS FOR BREAKER	PANDUIT	LAM4D350-12-1Y
4	15	SCR PANEL	VARIOUS	SEE DWG. I-102 FOR DETAILS
5	15	LOAD FUSE PANEL	VARIOUS	SEE DWG. I-101 FOR DETAILS
6	5	SCR AND THERMAL CONTROLLER PANEL	VARIOUS	SEE DWGS. I-010, I-030 & I-100 FOR DETAILS
7	5	120 VAC & 24 VDC POWER DISTRIBUTION PANEL	VARIOUS	SEE DWG. I-111 FOR DETAILS
8	5	STACK LIGHT SYSTEM (WHITE, GREEN & RED, LED INDICATORS)	WERMA	SEE DWG. I-120 FOR DETAILS
9	5	KEY OPERATED INTERLOCK SWITCH (NOT SHOWN)	HONEYWELL	GKMD09
10	5	KEY, 90°, FOR ITEM 9 (NOT SHOWN)	HONEYWELL	GKZ52M
11	5	KEY OPERATED INTERLOCK SWITCH (NOT SHOWN)	HONEYWELL	GKMD09
12	5	KEY, 90°, FOR ITEM 11 (NOT SHOWN)	HONEYWELL	GKZ52M
13	A/R	1598A BUS BAR (8mm x 100mm x 3M)	ERICO-ERIFLEX	505548
14	A/R	263A BUS BAR (3mm x 20mm x 3M)	ERICO-ERIFLEX	505502
15	1	E-STOP PUSH BUTTON (NOT SHOWN)	ALLEN-BRADLEY	
16	1	GROUND BAR (NOT SHOWN)	RITTAL	7113.000

PCC TYPE B – BILL OF MATERIALS

ITEM	QTY	DESCRIPTION	MANUFACTURER	PART NUMBER
1	6	ENCLOSURE (2200 x 1000 x 800mm)	RITTAL	CUSTOM – 8028500
2	6	MOTOR-OPERATED CIRCUIT BREAKER	SIEMENS	WL-S1F312QD3AA2ABA
3	18	LUGS FOR BREAKER	PANDUIT	LAM4D350-12-1Y
4	18	SCR PANEL	VARIOUS	SEE DWG. I-103 FOR DETAILS
5	18	LOAD FUSE PANEL	VARIOUS	SEE DWG. I-101 FOR DETAILS
6	6	SCR AND THERMAL CONTROLLER PANEL	VARIOUS	SEE DWGS. I-010, I-030 & I-100 FOR DETAILS
7	6	120 VAC & 24 VDC POWER DISTRIBUTION PANEL	VARIOUS	SEE DWG. I-111 FOR DETAILS
8	6	STACK LIGHT SYSTEM (WHITE, GREEN & RED, LED INDICATORS)	WERMA	SEE DWG. I-120 FOR DETAILS
9	6	KEY OPERATED INTERLOCK SWITCH (NOT SHOWN)	HONEYWELL	GKMD09
10	6	KEY, 90°, FOR ITEM 9 (NOT SHOWN)	HONEYWELL	GKZ52M
11	6	KEY OPERATED INTERLOCK SWITCH (NOT SHOWN)	HONEYWELL	GKMD09
12	6	KEY, 90°, FOR ITEM 11 (NOT SHOWN)	HONEYWELL	GKZ52M
13	A/R	1301A BUS BAR (6mm x 100mm x 3M)	ERICO-ERIFLEX	505046
14	A/R	126A BUS BAR (3mm x 13mm x 3M)	ERICO-ERIFLEX	505051
15	1	GROUND BAR (NOT SHOWN)	RITTAL	7113.000

PCC TYPE C – BILL OF MATERIALS

ITEM	QTY	DESCRIPTION	MANUFACTURER	PART NUMBER
1	3	ENCLOSURE (2200 x 1000 x 800mm)	RITTAL	CUSTOM – 8028500
2	3	MOTOR-OPERATED CIRCUIT BREAKER	SIEMENS	WL-S1F312QD3AA2ABA
3	9	LUGS FOR BREAKER	PANDUIT	LAM4D350-12-1Y
4	9	SCR PANEL	VARIOUS	SEE DWG. I-104 FOR DETAILS
5	9	LOAD FUSE PANEL	VARIOUS	SEE DWG. I-101 FOR DETAILS
6	3	SCR AND THERMAL CONTROLLER PANEL	VARIOUS	SEE DWGS. I-010, I-030 & I-100 FOR DETAILS
7	3	120 VAC & 24 VDC POWER DISTRIBUTION PANEL	VARIOUS	SEE DWG. I-111 FOR DETAILS
8	3	STACK LIGHT SYSTEM (WHITE, GREEN & RED, LED INDICATORS)	WERMA	SEE DWG. I-120 FOR DETAILS
9	3	KEY OPERATED INTERLOCK SWITCH (NOT SHOWN)	HONEYWELL	GKMD09
10	3	KEY, 90°, FOR ITEM 9 (NOT SHOWN)	HONEYWELL	GKZ52M
11	3	KEY OPERATED INTERLOCK SWITCH (NOT SHOWN)	HONEYWELL	GKMD09
12	3	KEY, 90°, FOR ITEM 11 (NOT SHOWN)	HONEYWELL	GKZ52M
13	A/R	1301A BUS BAR (5mm x 100mm x 3M)	ERICO-ERIFLEX	505046
14	A/R	126A BUS BAR (3mm x 13mm x 3M)	ERICO-ERIFLEX	505051
15	1	GROUND BAR (NOT SHOWN)	RITTAL	7113.000

WILLIAM L. CARPENTER
REGISTERED ENGINEER
No. 000023578
STATE OF TENNESSEE

DEVELOPMENT ONE, INC.
1611 East Fourth Street, Suite 250
Santa Ana, California 92701
J.Bruce Camino, Architect, AIA, NCARB
(714) 689-0298
(714) 648-0197 FAX

DATE	SYM	REVISION	BY	A'PD
10/19/09		100% FINAL DESIGN		

NATIONAL AERONAUTICS AND SPACE ADMINISTRATION
DRYDEN FLIGHT RESEARCH CENTER
EDWARDS, CA

DRAWING TITLE
PCC TYPE A 200-AMP
ZERO FIRED SCR
CABINET LAYOUT (SHEET 3)

PROJECT TITLE
REPAIR BUILDING 4820 FLIGHT LOADS LABORATORY
POWER CONTROL UPGRADE

APPROVALS	DATE
Chief, Facilities Engineering & Asset Mgmt. Office	6-17-10
Project Manager	6.13.10
Security Office	5/25/10
Project Requestor	5-27-10
Safety Office	6-1-10
Telecom	5/26/10

DRAWN BY	M. HENNIGH	DATE STRTD	09/17/08
W.O. #	95099	DATE PRNTD	04/26/10
PLOT SCALE	TRADE SH. No.	I-020-03	
CAD FILE NAME		SHEET No. 75 of 125	

NOTES:

1. THERE WILL BE 5 TYPE A ASSEMBLIES AND THE TOTAL QUANTIES ARE SHOWN.
2. THERE WILL BE 6 TYPE B ASSEMBLIES AND THE TOTAL QUANTIES ARE SHOWN.
3. THERE WILL BE 3 TYPE C ASSEMBLIES AND THE TOTAL QUANTIES ARE SHOWN.
4. QUANITIES SHOWN ON SHEET I-020-02. ITEMS REPEATED HERE FOR VISUAL CLARITY.
5. QUANITIES SHOWN ON SHEET I-107. ITEMS REPEATED HERE FOR VISUAL CLARITY.

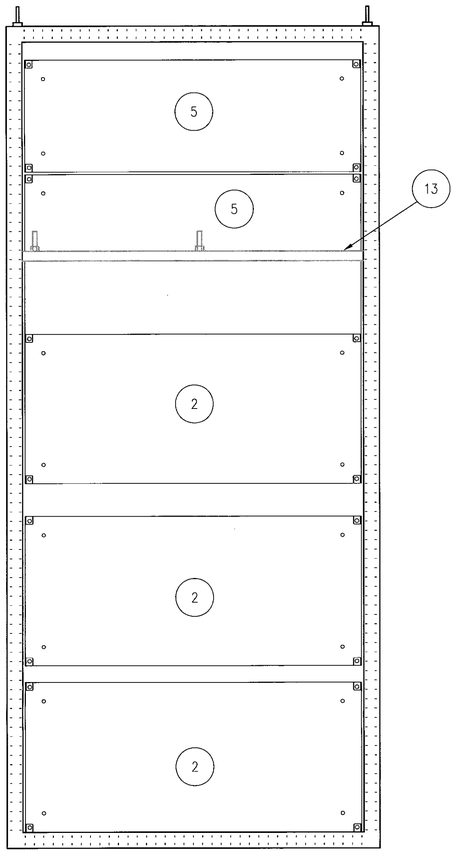

FRONT VIEW W/DOOR OFF
SCALE: 1:8

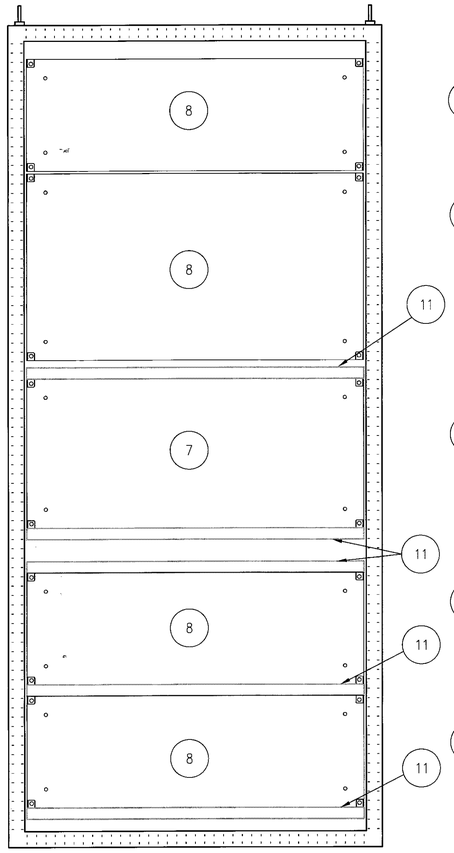

BACK VIEW W/DOOR OFF
SCALE: 1:8

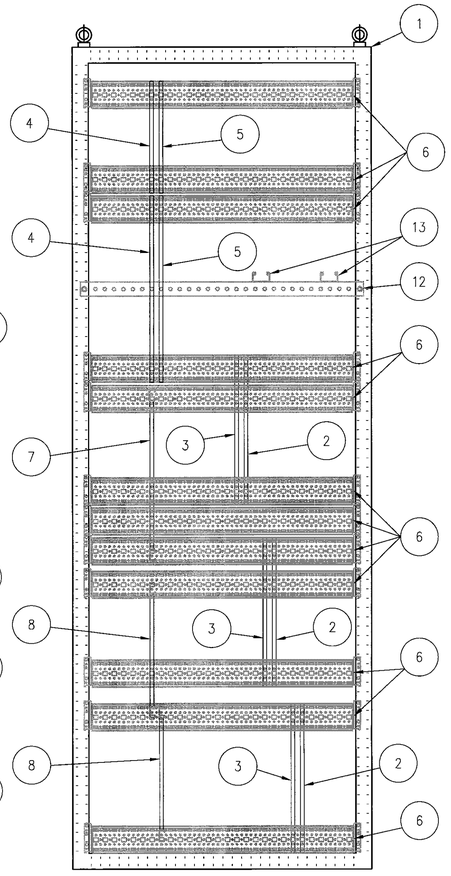

RIGHT SIDE VIEW W/PANEL OFF
SCALE: 1:8

PCC TYPE A – BILL OF MATERIALS

ITEM	QTY	DESCRIPTION	MANUFACTURER	PART NUMBER
1	5	ENCLOSURE (2200 x 1000 x 800mm)	RITTAL	CUSTOM – 8028500
2	15	SCR PANEL	VARIOUS	SEE DWG. I-102 FOR DETAILS
3	15	LOAD FUSE PANEL	VARIOUS	SEE DWG. I-101 FOR DETAILS
4	5	SCR AND THERMAL CONTROLLER PANEL	VARIOUS	SEE DWGS. I-010, I-030 & I-100 FOR DETAILS
5	5	120 VAC & 24 VDC POWER DISTRIBUTION PANEL	VARIOUS	SEE DWG. I-111 FOR DETAILS
6	24	TS PUNCHED SECTION WITH MOUNTING FLANGE (17mm x 73 mm)	RITTAL	8612.180
7	5	SWING-OUT PANEL LAYOUT	VARIOUS	SEE DWG I-105 FOR DETAILS
8	10	PANEL, PARTIAL MOUNTING	RITTAL	8614.040
9	15	HINGE KIT FOR ITEMS 7 & 8 (NOT SHOWN)	RITTAL	8614.100
10		NOT USED		
11	15	C RAILS	RITTAL	7828.100
12	5	TS PUNCHED RAIL (25 mm x 38 mm)	RITTAL	8612.780
13	5	SYSTEM SUPPORT RAILS	RITTAL	4347.000
14	2	M6 CAGE NUTS (NOT SHOWN)	RITTAL	4164.000
15	1	M6 MULTI-TOOTH SCREWS (NOT SHOWN)	RITTAL	2504.500
16	2	M6 SNAP-ON NUT TS (NOT SHOWN)	RITTAL	8800.806
17	1	M8 SNAP-ON NUT TS (NOT SHOWN)	RITTAL	8800.808

PCC TYPE B – BILL OF MATERIALS

ITEM	QTY	DESCRIPTION	MANUFACTURER	PART NUMBER
1	6	ENCLOSURE (2200 x 1000 x 800mm)	RITTAL	CUSTOM – 8028500
2	18	SCR PANEL	VARIOUS	SEE DWG. I-103 FOR DETAILS
3	18	LOAD FUSE PANEL	VARIOUS	SEE DWG. I-101 FOR DETAILS
4	6	SCR AND THERMAL CONTROLLER PANEL	VARIOUS	SEE DWGS. I-010, I-030 & I-100 FOR DETAILS
5	6	120 VAC & 24 VDC POWER DISTRIBUTION PANEL	VARIOUS	SEE DWG. I-111 FOR DETAILS
6	36	TS PUNCHED SECTION WITH MOUNTING FLANGE (17mm x 73 mm)	RITTAL	8612.180
7	5	SWING-OUT PANEL LAYOUT	VARIOUS	SEE DWG I-105 FOR DETAILS
8	12	PANEL, PARTIAL MOUNTING	RITTAL	8614.040
9	15	HINGE KIT FOR ITEMS 7 & 8 (NOT SHOWN)	RITTAL	8614.100
10		NOT USED		
11	8	C RAILS	RITTAL	7828.100
12	6	TS PUNCHED RAIL (25 mm x 38 mm)	RITTAL	8612.780
13	6	SYSTEM SUPPORT RAILS	RITTAL	4347.000
14	2	M6 CAGE NUTS (NOT SHOWN)	RITTAL	4164.000
15	1	M6 MULTI-TOOTH SCREWS (NOT SHOWN)	RITTAL	2504.500
16	2	M6 SNAP-ON NUT TS (NOT SHOWN)	RITTAL	8800.806
17	1	M8 SNAP-ON NUT TS (NOT SHOWN)	RITTAL	8800.808

PCC TYPE C – BILL OF MATERIALS

ITEM	QTY	DESCRIPTION	MANUFACTURER	PART NUMBER
1	3	ENCLOSURE (2200 x 1000 x 800mm)	RITTAL	CUSTOM – 8028500
2	9	SCR PANEL	VARIOUS	SEE DWG. I-104 FOR DETAILS
3	9	LOAD FUSE PANEL	VARIOUS	SEE DWG. I-101 FOR DETAILS
4	3	SCR AND THERMAL CONTROLLER PANEL	VARIOUS	SEE DWGS. I-010, I-030 & I-100 FOR DETAILS
5	3	120 VAC & 24 VDC POWER DISTRIBUTION PANEL	VARIOUS	SEE DWG. I-111 FOR DETAILS
6	18	TS PUNCHED SECTION WITH MOUNTING FLANGE (17mm x 73 mm)	RITTAL	8612.180
7	5	SWING-OUT PANEL LAYOUT	VARIOUS	SEE DWG I-106 FOR DETAILS
8	4	VT PANELS	VARIOUS	SEE DWG I-107 FOR DETAILS
9	15	HINGE KIT FOR ITEMS 7 & 8 (NOT SHOWN)	RITTAL	8614.100
10		NOT USED		
11	9	C RAILS	RITTAL	7828.100
12	3	TS PUNCHED RAIL (25 mm x 38 mm)	RITTAL	8612.780
13	3	SYSTEM SUPPORT RAILS	RITTAL	4347.000
14	2	M6 CAGE NUTS (NOT SHOWN)	RITTAL	4164.000
15	1	M6 MULTI-TOOTH SCREWS (NOT SHOWN)	RITTAL	2504.500
16	2	M6 SNAP-ON NUT TS (NOT SHOWN)	RITTAL	8800.806
17	1	M8 SNAP-ON NUT TS (NOT SHOWN)	RITTAL	8800.808

DEVELOPMENT ONE, INC.
1611 East Fourth Street, Suite 250
Santa Ana, California 92701
J.Bruce Camino, Architect, AIA, NCARB
(714) 689-0298
(714) 648-0197 FAX

DATE	SYM	REVISION	BY	A'PD
10/19/09		100% FINAL DESIGN		

NATIONAL AERONAUTICS AND SPACE ADMINISTRATION
DRYDEN FLIGHT RESEARCH CENTER
EDWARDS, CA

DRAWING TITLE
PCC TYPICAL
FABRICATION DETAILS

PROJECT TITLE
REPAIR BUILDING 4820 FLIGHT LOADS LABORATORY
POWER CONTROL UPGRADE

APPROVALS	DATE
Chief, Facilities Engineering & Asset Mgmt. Office	6/7/10
Project Manager	5/13/10
Safety Office	5/25/10
Project Requestor	5/22/10
Safety Office	6/1/10
Telecom	5/26/10

DRAWN BY	M. HENNIGH	DATE STRTD	09/17/08
W.O. #	95099	DATE PRNTD	04/26/10
PLOT SCALE		TRADE SH. No.	I-021
CAD FILE NAME			SHEET No. 76 of 125

BILL OF MATERIALS

ITEM	QTY	DESCRIPTION	MANUFACTURER	PART NUMBER
1	1	CONTROLLOGIX 10-SLOT CHASSIS	ALLEN-BRADLEY	1756-A10
2	1	POWER SUPPLY, 24 VDC INPUT	ALLEN-BRADLEY	1756-PB72/C
3	1	PROGRAMMABLE AUTOMATION CONTROLLER PROCESSSOR	ALLEN-BRADLEY	1756-L61
4	1	ETHERNET ADAPTER	ALLEN-BRADLEY	1756-EN2T
5	3	DIGITAL INPUT, 16-CHANNEL MODULE	ALLEN-BRADLEY	1756-IB16
6	3	ANALOG (4-20 MILLIAMP CURRENT) INPUT 16-CHANNEL MODULE	ALLEN-BRADLEY	1756-IF16
7	2	DIGITAL OUTPUT, 16-CHANNEL MODULE	ALLEN-BRADLEY	1756-OB16E
8	3	REMOVABLE TERMINAL BLOCK, 36-PIN SPRING CAGE	ALLEN-BRADLEY	1756-TBS6H
9	5	REMOVABLE TERMINAL BLOCK, 20-PIN SPRING CAGE	ALLEN-BRADLEY	1756-TBSH

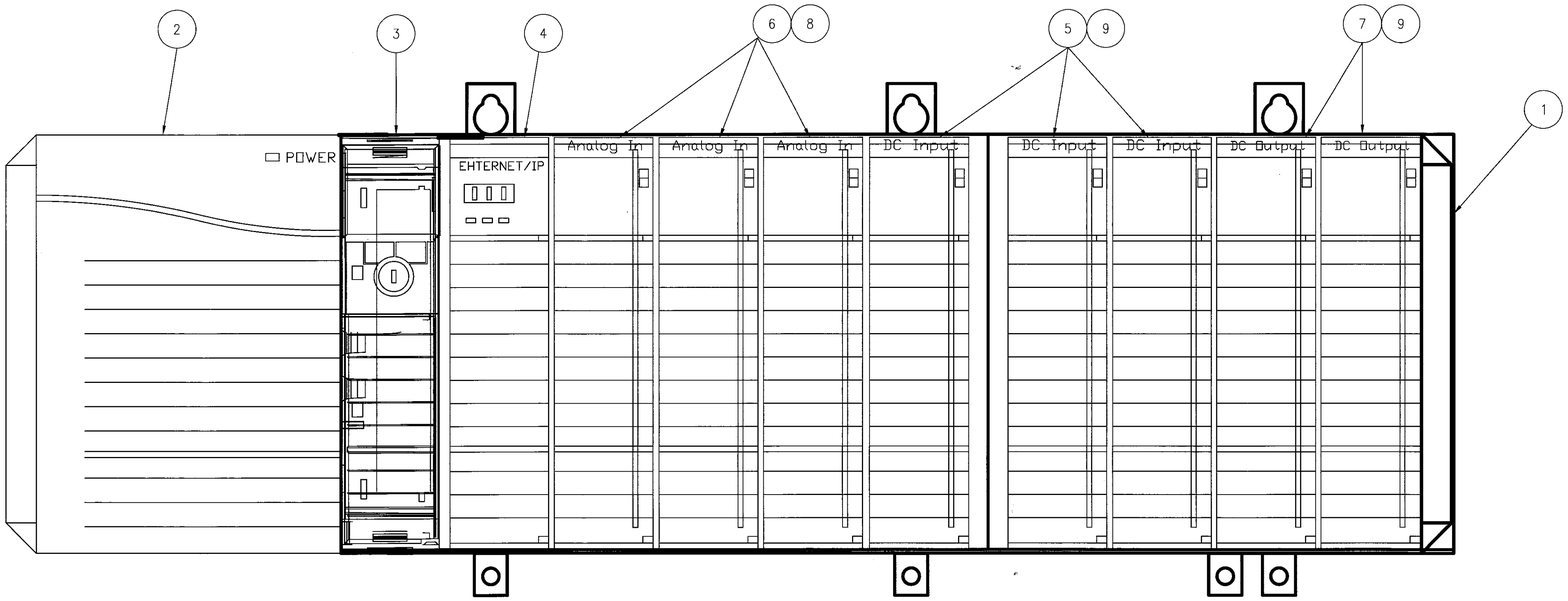

DEVELOPMENT ONE, INC.
1611 East Fourth Street, Suite 250
Santa Ana, California 92701
J.Bruce Camino, Architect, AIA, NCARB
(714) 689-0298
(714) 648-0197 FAX

WILLIAM L. CARPENTER
REGISTERED ENGINEER
No. 0002279
STATE OF TENNESSEE

DATE	SYM	REVISION	BY	A'PD
10/19/09		100% FINAL DESIGN		

NATIONAL AERONAUTICS AND SPACE ADMINISTRATION
DRYDEN FLIGHT RESEARCH CENTER
EDWARDS, CA

DRAWING TITLE
PCC SCR CONTROLLER
TYPICAL – CHASSIS LAYOUT

PROJECT TITLE
REPAIR BUILDING 4820 FLIGHT LOADS LABORATORY
POWER CONTROL UPGRADE

APPROVALS	DATE
Chief, Facilities Engineering & Asset Mgmt. Office	6-17-10
Program Manager	5.13.10
Security Officer	5/24/10
Project Requestor	5-22-10
Safety Office	6-1-10
Telecom	5/24/10

DRAWN BY	M. HENNIGH	DATE STRTD	09/17/08
W.O. #	95099	DATE PRNTD	04/26/10
PLOT SCALE		TRADE SH. No.	I-030
CAD FILE NAME			

SHEET No. 77 of 125

NOTES:

1. PCC A5 WILL CONTAIN ONLY 12 CHANNELS (0–11).
2. PCC B1 WILL CONTAIN ONLY 15 CHANNELS (0–14).
3. ALL I/O SIGNAL WIRING SHALL BE BELDEN 8760 (#18AWG SHIELDED, TWISTED PAIR).
4. ALL 24VDC POWER WIRING SHALL BE #16AWG.

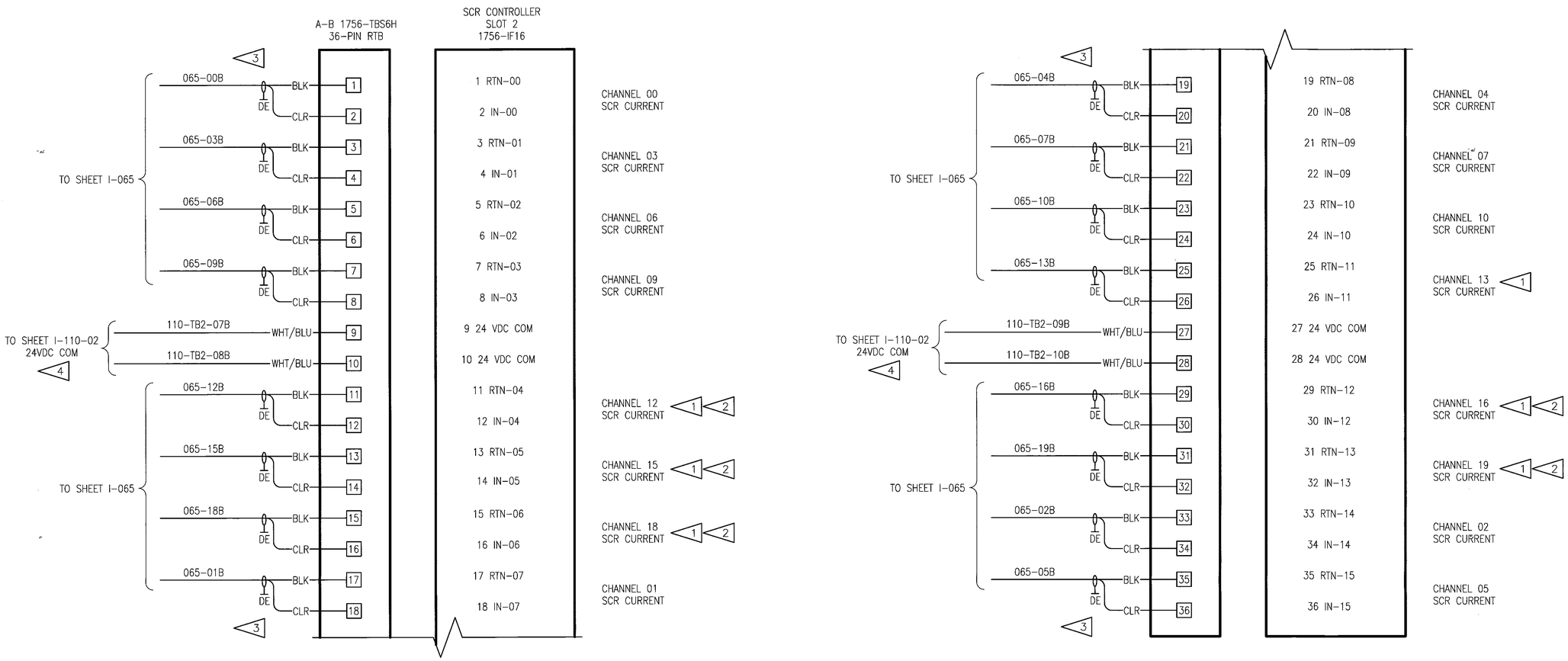

WILLIAM L. CARPENTER
REGISTERED ENGINEER
PROFESSIONAL ENGINEER
COMMERCE
NO. 00022979
STATE OF TENNESSEE

DEVELOPMENT ONE, INC.
1611 East Fourth Street, Suite 250
Santa Ana, California 92701
J.Bruce Camino, Architect, AIA, NCARB
(714) 689-0298
(714) 648-0197 FAX

DATE	SYM	REVISION	BY	A'PD
10/19/09		100% FINAL DESIGN		

NATIONAL AERONAUTICS AND SPACE ADMINISTRATION
DRYDEN FLIGHT RESEARCH CENTER
EDWARDS, CA

DRAWING TITLE
PCC SCR CONTROLLER
ANALOG INPUTS
TYPE A AND B (SHEET 1)

PROJECT TITLE
REPAIR BUILDING 4820 FLIGHT LOADS LABORATORY
POWER CONTROL UPGRADE

APPROVALS	DATE
Chief, Facilities Engineering & Asset Mgmt. Office	6-17-10
Project Manager	5.13.10
Security Office	5/25/10
Project Requestor	5.22.10
Safety Office	6-1-10
Telecom	5/26/10

DRAWN BY	M. HENNIGH	DATE STRTD	09/17/08
W.O. #	95099	DATE PRNTD	04/26/10
PLOT SCALE		TRADE SH. No.	I–031–01
CAD FILE NAME			

SHEET No. 78 of 125

NOTES:

1. PCC A5 WILL CONTAIN ONLY 12 CHANNELS (0 – 11).
2. PCC B1 WILL CONTAIN ONLY 15 CHANNELS (0 – 14).
3. ALL I/O SIGNAL WIRING BELDEN 8760 (#18AWG SHIELDED, TWISTED PAIR).
4. ALL 24VDC POWER WIRING SHALL BE #16AWG.

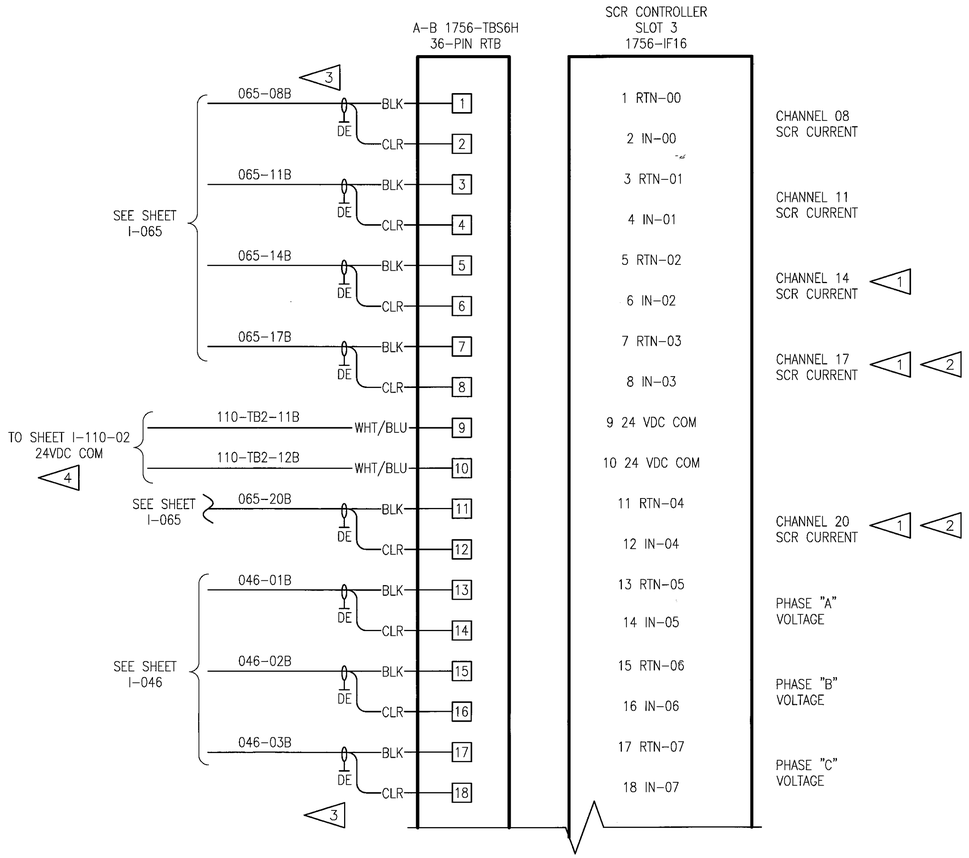

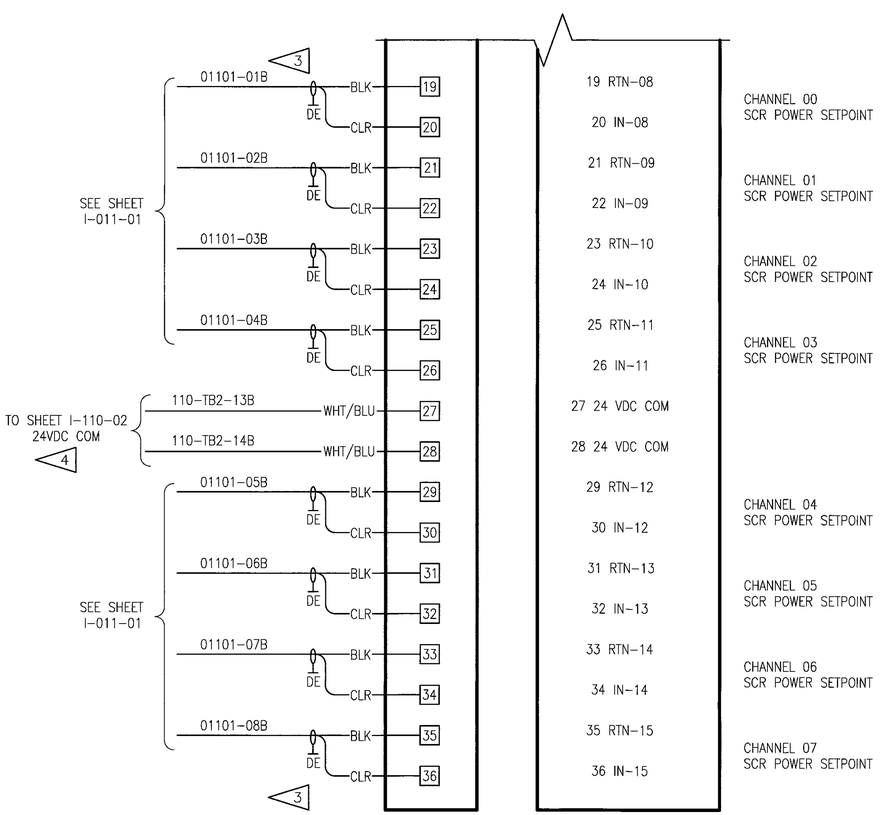

DEVELOPMENT ONE, INC.
1611 East Fourth Street, Suite 250
Santa Ana, California 92701
J.Bruce Camino, Architect, AIA, NCARB
(714) 689-0298
(714) 648-0197 FAX

DATE	SYM	REVISION	BY	A'PD
10/19/09		100% FINAL DESIGN		

NATIONAL AERONAUTICS AND SPACE ADMINISTRATION
DRYDEN FLIGHT RESEARCH CENTER
EDWARDS, CA

DRAWING TITLE
PCC SCR CONTROLLER
ANALOG INPUTS
TYPE A AND B (SHEET 2)

PROJECT TITLE
REPAIR BUILDING 4820 FLIGHT LOADS LABORATORY
POWER CONTROL UPGRADE

APPROVALS	DATE
Chief, Facilities Engineering & Asset Mgmt. Office	6-17-10
Project Manager	5.13.10
Safety Office	5/25/10
Project Requestor	5.22.10
Safety Office	6-1-10
Telecom	5/26/10

DRAWN BY	M. HENNIGH	DATE STRTD	09/17/08
W.O. #	95099	DATE PRNTD	04/26/10
PLOT SCALE		TRADE SH. No.	I–031–02
CAD FILE NAME			

SHEET No. 78 of 125

NOTES:

1. PCC A5 WILL CONTAIN ONLY 12 CHANNELS (0 – 11).
2. PCC B1 WILL CONTAIN ONLY 15 CHANNELS (0 – 14).
3. ALL I/O SIGNAL WIRING BELDEN 8760 (#18AWG SHIELDED, TWISTED PAIR).
4. ALL 24VDC POWER WIRING SHALL BE #16AWG.

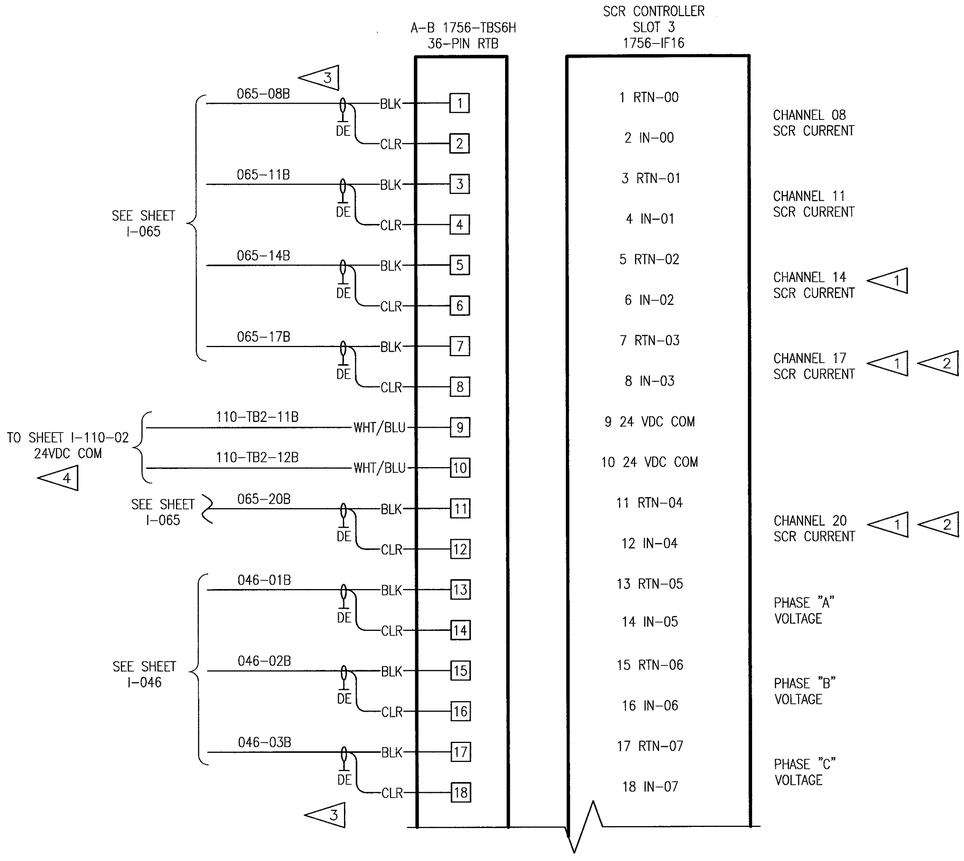

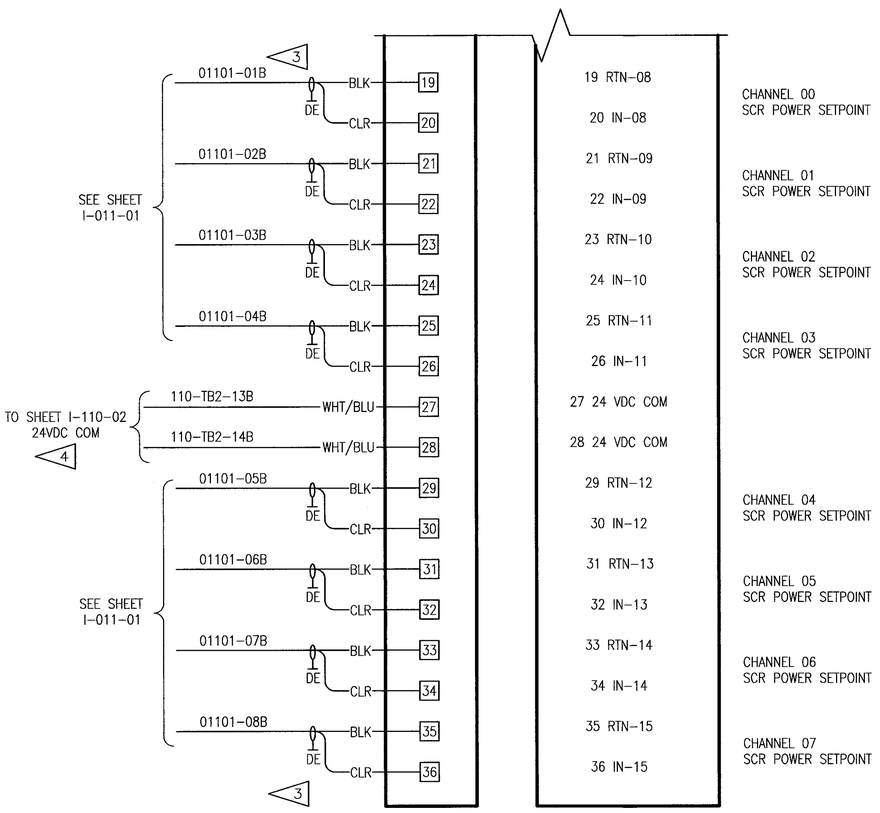

DEVELOPMENT ONE, INC.
1611 East Fourth Street, Suite 250
Santa Ana, California 92701
J.Bruce Camino, Architect, AIA, NCARB
(714) 689-0298
(714) 648-0197 FAX

WILLIAM L. CARPENTER JR. REGISTERED ENGINEER AGENT FOR COMMERCE NO. 0002979 STATE OF TENNESSEE

DATE	SYM	REVISION	BY	A'PD
10/19/09		100% FINAL DESIGN		

NATIONAL AERONAUTICS AND SPACE ADMINISTRATION
DRYDEN FLIGHT RESEARCH CENTER
EDWARDS, CA

DRAWING TITLE
PCC SCR CONTROLLER
ANALOG INPUTS
TYPE A AND B (SHEET 2)

PROJECT TITLE
REPAIR BUILDING 4820 FLIGHT LOADS LABORATORY
POWER CONTROL UPGRADE

APPROVALS	DATE
Chief–Facilities Engineering & Asset Mgmt. Office	6-17-10
Project Manager	6-17-10
Safety Office	6/25/10
Project Requestor	5-22-10
Safety Office	6-1-10
Telecom	5/26/10

DRAWN BY	M. HENNIGH	DATE STRTD	09/17/08
W.O. #	95099	DATE PRNTD	04/26/10
PLOT SCALE		TRADE SHT. No.	I–031–02
CAD FILE NAME			

SHEET No. 79 of 125

NOTES:

1. PCC A5 WILL CONTAIN ONLY 12 CHANNELS (0–11).
2. PCC B1 WILL CONTAIN ONLY 15 CHANNELS (0–14).
3. ALL I/O SIGNAL WIRING SHALL BE BELDEN 8760 (#18AWG TWISTED, SHIELDED PAIR).
4. ALL 24VDC POWER WIRING SHALL BE #16AWG.
5. CHILLED WATER DELTA PRESSURE WILL BE WIRED INTO PCC A1 ONLY.

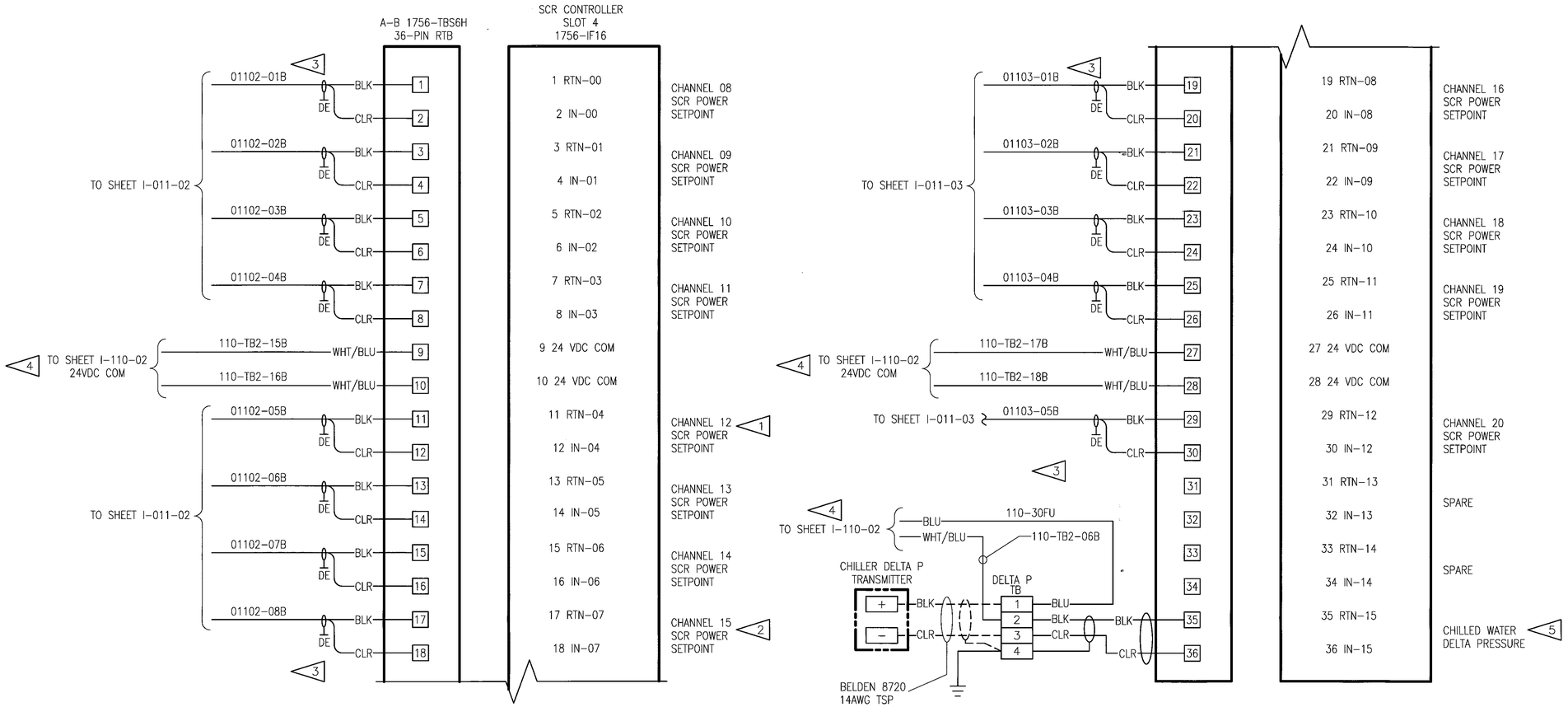

DEVELOPMENT ONE, INC.
1611 East Fourth Street, Suite 250
Santa Ana, California 92701
J.Bruce Camino, Architect, AIA, NCARB
(714) 689-0298
(714) 648-0197 FAX

DATE	SYM	REVISION	BY	A'PD
10/19/09		100% FINAL DESIGN		

NATIONAL AERONAUTICS AND SPACE ADMINISTRATION
DRYDEN FLIGHT RESEARCH CENTER
EDWARDS, CA

DRAWING TITLE
PCC SCR CONTROLLER
ANALOG INPUTS
TYPE A AND B (SHEET 3)

PROJECT TITLE
REPAIR BUILDING 4820 FLIGHT LOADS LABORATORY
POWER CONTROL UPGRADE

APPROVALS	DATE
Chief Facilities Engineering & Asset Mgmt. Office	6-17-10
Project Manager	5.13.10
Security Office	5/25/10
Project Responsible	5.22.10
Safety Office	6-4-10
Telecom	5/26/10

DRAWN BY	M. HENNIGH	DATE STRTD	09/17/08
W.O. #	95099	DATE PRNTD	04/26/10
PLOT SCALE		TRADE Stl. No.	I–031–03
CAD FILE NAME			SHEET No. 80 of 125

NOTES:

1. (TM) INDICATES ZERO TRIGGER MODULE AND (FM) INDICATES PHASE CONTROL FIRING MODULE.
2. PCC A5 AND PCC C3 WILL CONTAIN ONLY 12 CHANNELS (0–11). UNUSED CHANNELS WILL NOT BE WIRED.
3. PCC B1 WILL CONTAIN ONLY 15 CHANNELS (0–14). UNUSED CHANNELS WILL NOT BE WIRED.
4. UNLESS OTHERWISE NOTED, ALL WIRING SHALL BE #16AWG.

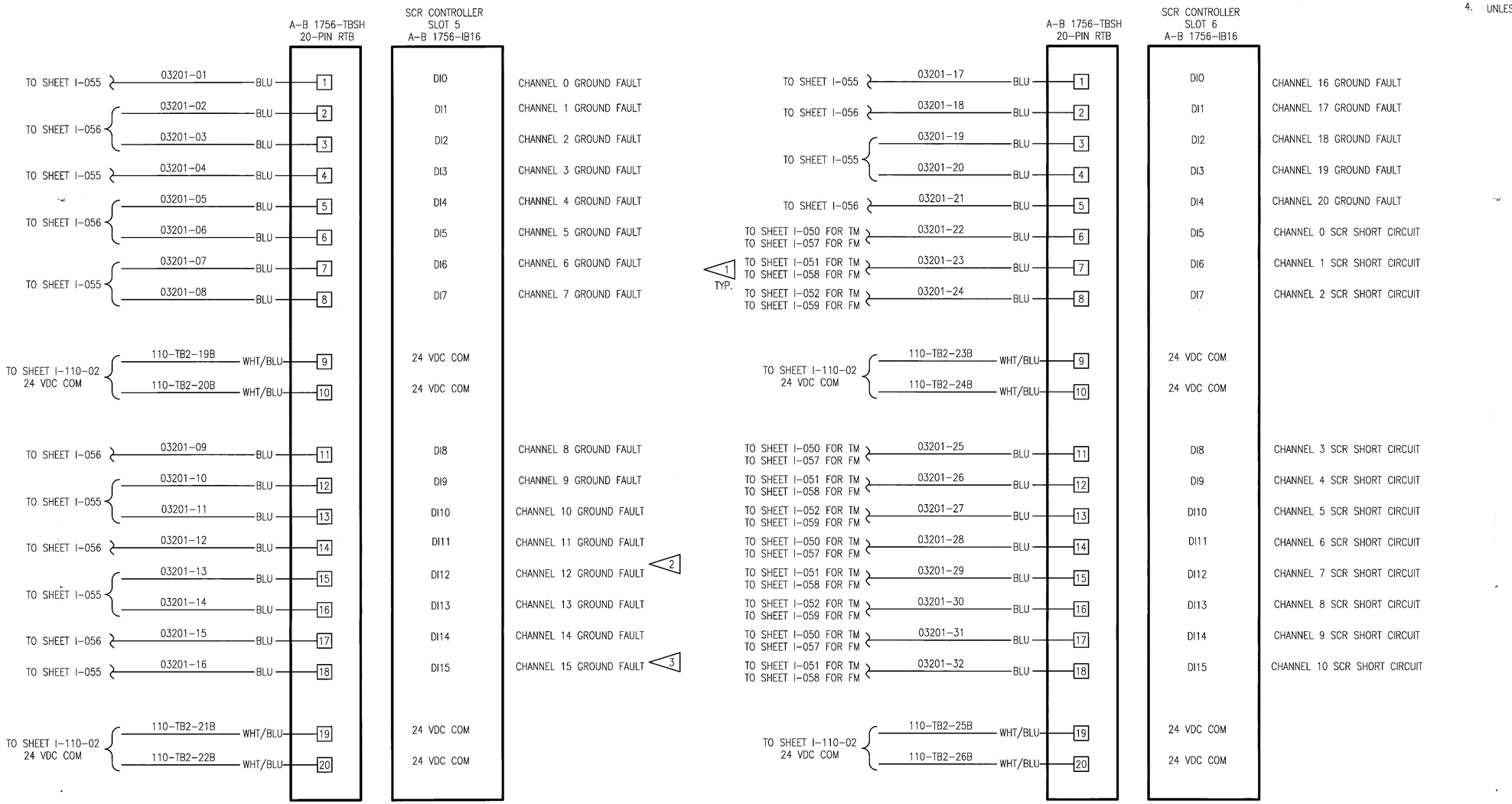

DEVELOPMENT ONE, INC.
1611 East Fourth Street, Suite 250
Santa Ana, California 92701
J.Bruce Camino, Architect, AIA, NCARB
(714) 689-0298
(714) 648-0197 FAX

DATE	SYM	REVISION	BY	A'PD
10/19/09		100% FINAL DESIGN		

NATIONAL AERONAUTICS AND SPACE ADMINISTRATION
DRYDEN FLIGHT RESEARCH CENTER
EDWARDS, CA

DRAWING TITLE
PCC SCR CONTROLLER DIGITAL INPUTS TYPICAL (SHEET 1)

PROJECT TITLE
REPAIR BUILDING 4820 FLIGHT LOADS LABORATORY POWER CONTROL UPGRADE

APPROVALS	DATE
Chief, Facilities Engineering & Asset Mgmt. Office	6-7-10
Program Manager	5.13.10
Safety Office	5/25/10
Project Requestor	5-27-10
Quality Office	6-4-10
Telecom	5/26/10

DRAWN BY	M. HENNIGH	DATE STRTD	09/17/08
W.O. #	95099	DATE PRNTD	04/26/10
PLOT SCALE		TRADE SH. No.	I–032–01
CAD FILE NAME			SHEET No. 81 of 125

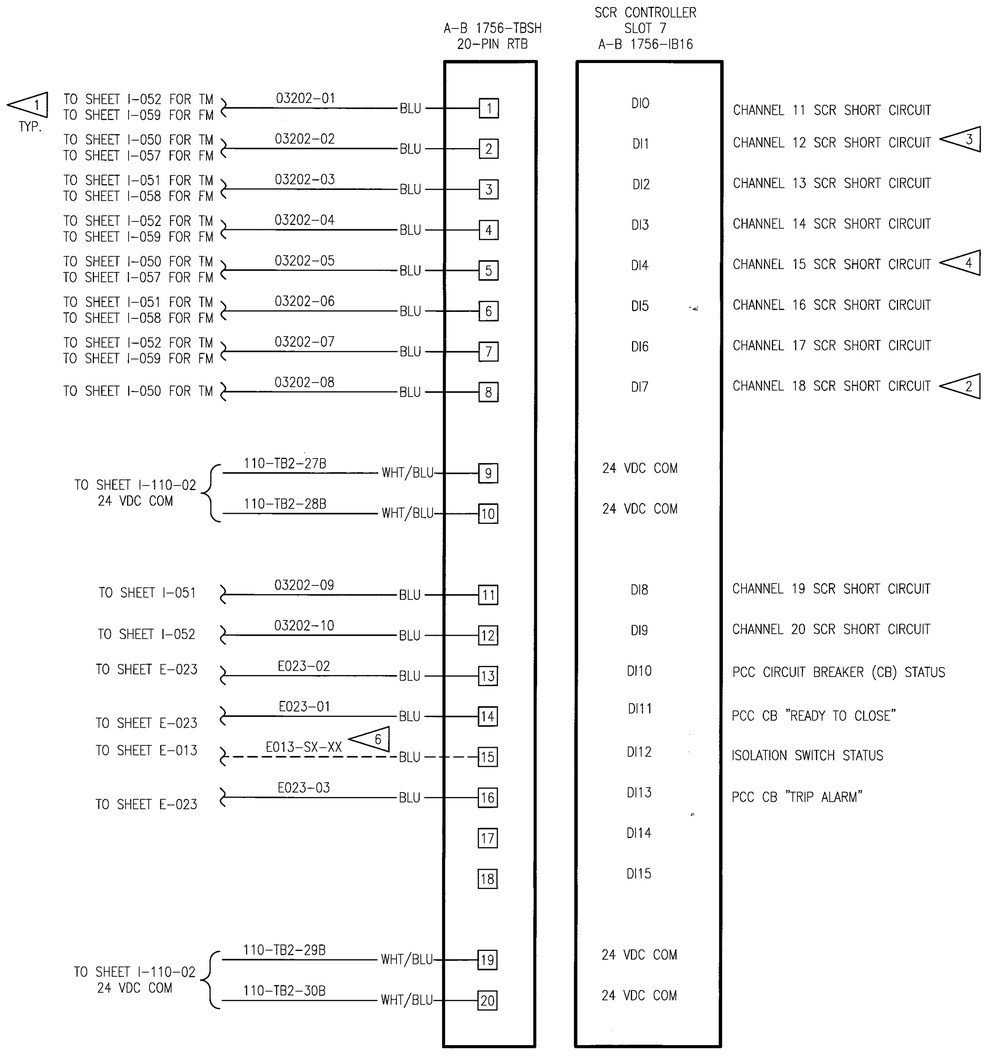

NOTES:

1. (TM) INDICATES ZERO FIRED TRIGGER MODULE AND (FM) INDICATES PHASE CONTROL FIRING MODULE.
2. TYPE "C" PHASE CONTROL WILL CONTAIN ONLY 18 CHANNELS (0-17). DI7-DI9 WILL NOT BE WIRED.
3. PCC A1 AND PCC C3 WILL CONTAIN ONLY 12 CHANNELS (0-11). DI1-DI9 WILL NOT BE WIRED.
4. PCC B1 WILL CONTAIN ONLY 15 CHANNELS (0-14). DI4-DI9 WILL NOT BE WIRED.
5. UNLESS OTHERWISE NOTED, ALL WIRING SHALL BE #16AWG.
6. REFER TO SHEET E-014 FOR CABLE SCHEDULE.

WILLIAM L. CARPENTER
REGISTERED ENGINEER
No. 022978
STATE OF TENNESSEE

DEVELOPMENT ONE, INC.
1611 East Fourth Street, Suite 250
Santa Ana, California 92701
J.Bruce Camino, Architect, AIA, NCARB
(714) 689-0298
(714) 648-0197 FAX

DATE	SYM	REVISION	BY	A'PD
10/19/09		100% FINAL DESIGN		

NATIONAL AERONAUTICS AND SPACE ADMINISTRATION
DRYDEN FLIGHT RESEARCH CENTER
EDWARDS, CA

DRAWING TITLE
PCC SCR CONTROLLER
DIGITAL INPUTS
TYPICAL (SHEET 2)

PROJECT TITLE
REPAIR BUILDING 4820 FLIGHT LOADS LABORATORY
POWER CONTROL UPGRADE

APPROVALS	DATE
Chief, Facilities Engineering & Asset Mgmt. Office	6-17-10
Project Manager	5-13-10
Safety Office	5/25/10
Project Inspector	5-22-10
Safety Office	6-4-10
Telecom	5/24/10

DRAWN BY	M. HENNIGH	DATE STRTD	09/17/08
W.O. #	95099	DATE PRNTD	04/26/10
PLOT SCALE		TRADE SH. No.	I-032-02
CAD FILE NAME			SHEET No. 82 of 125

NOTES:

1. TYPE "C" PHASE CONTROL WILL NOT UTILIZE DIGITAL OUTPUT SLOT 8, CHANNELS 3–15 AND DIGITAL OUTPUT SLOT 9, CHANNELS 0–15.
2. UNLESS OTHERWISE NOTED, ALL WIRING SHALL BE #16AWG.
3. PCC A5 WILL CONTAIN ONLY 12 CHANNELS (0 – 11). UNUSED CHANNELS WILL NOT BE WIRED.
4. PCC B1 WILL CONTAIN ONLY 15 CHANNELS (0 – 14). UNUSED CHANNELS WILL NOT BE WIRED.
5. PCC A1 ONLY CONTAINS CHILLER LOW DELTA P OUTPUT.

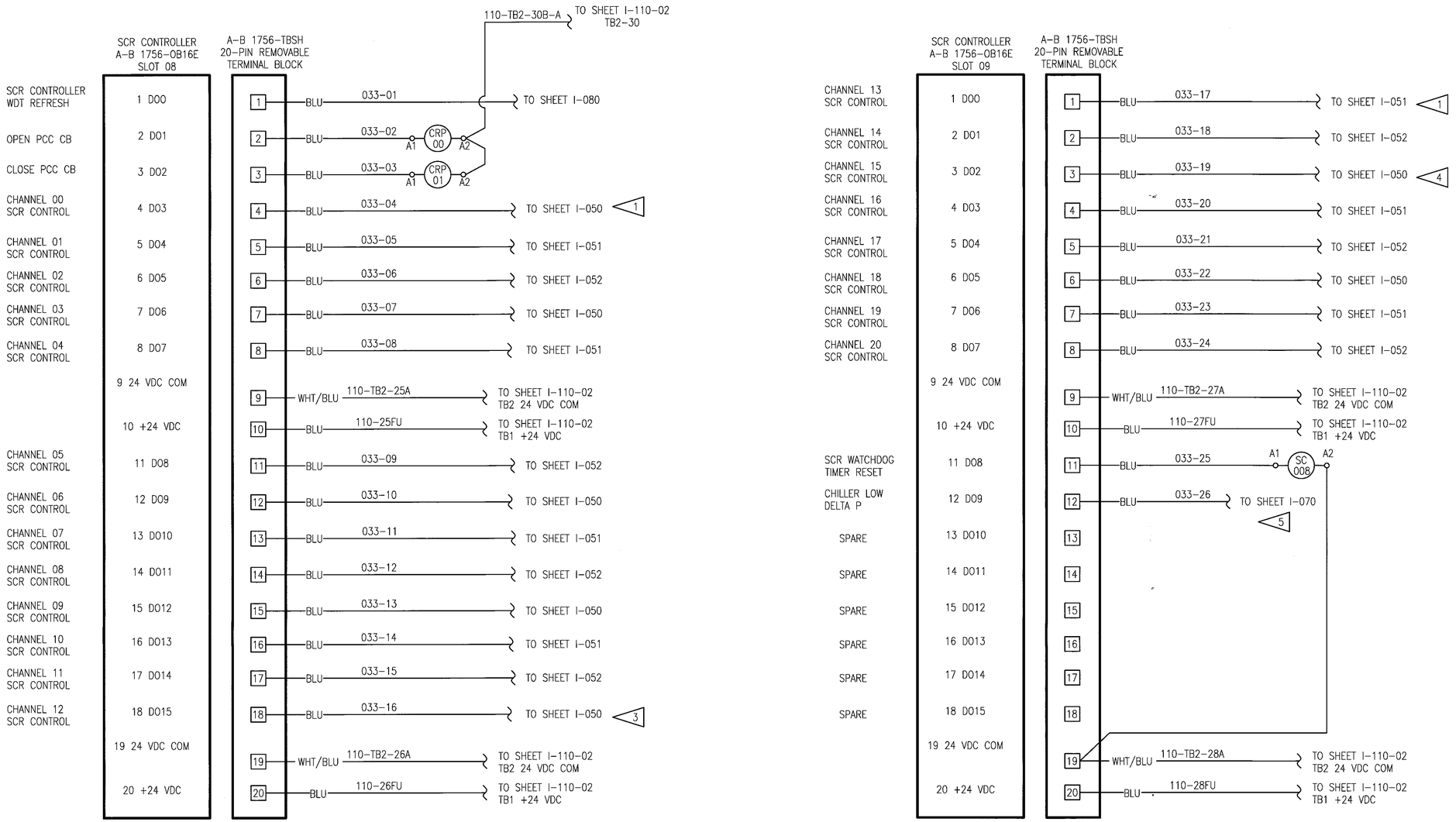

WILLIAM L. CARPENTER JR. REGISTERED ENGINEER COMMENCE NO. 0002279 STATE OF TENNESSEE

DEVELOPMENT ONE, INC.
1611 East Fourth Street, Suite 250
Santa Ana, California 92701
J.Bruce Camino, Architect, AIA, NCARB
(714) 689-0298
(714) 648-0197 FAX

DATE	SYM	REVISION	BY	A'PD
10/19/09		100% FINAL DESIGN		

NATIONAL AERONAUTICS AND SPACE ADMINISTRATION
DRYDEN FLIGHT RESEARCH CENTER
EDWARDS, CA

DRAWING TITLE
PCC SCR CONTROLLER DIGITAL OUTPUTS TYPICAL

PROJECT TITLE
REPAIR BUILDING 4820 FLIGHT LOADS LABORATORY POWER CONTROL UPGRADE

APPROVALS	DATE
Chief Facilities Engineering & Asset Mgmt. Office	6-17-10
Project Manager	5.13.10
Security Office	5/25/10
Project Requestor	5-22-10
Safety Office	6-1-10
Telecom	5/26/10

DRAWN BY	M. HENNIGH	DATE STRTD	09/17/08
W.O. #	95099	DATE PRNTD	04/26/10
PLOT SCALE	TRADE SH. No.	I–033	
CAD FILE NAME		SHEET No. 83 of 125	

NOTES:

1. PCC C3 WILL CONTAIN ONLY 12 CHANNELS (0–11).
2. ALL I/O SIGNAL WIRING SHALL BE BELDEN 8760 (#18AWG SHIELEDED, TWISTED PAIR).
3. ALL 24VDC POWER WIRING SHALL BE #16AWG.

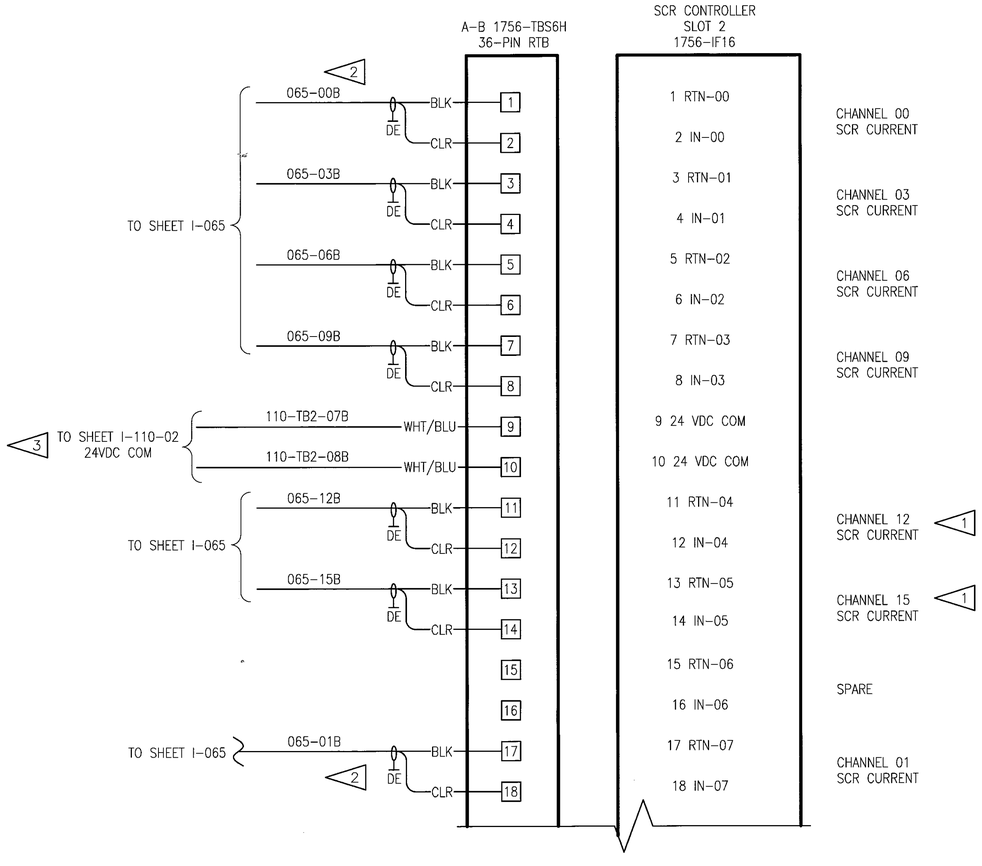

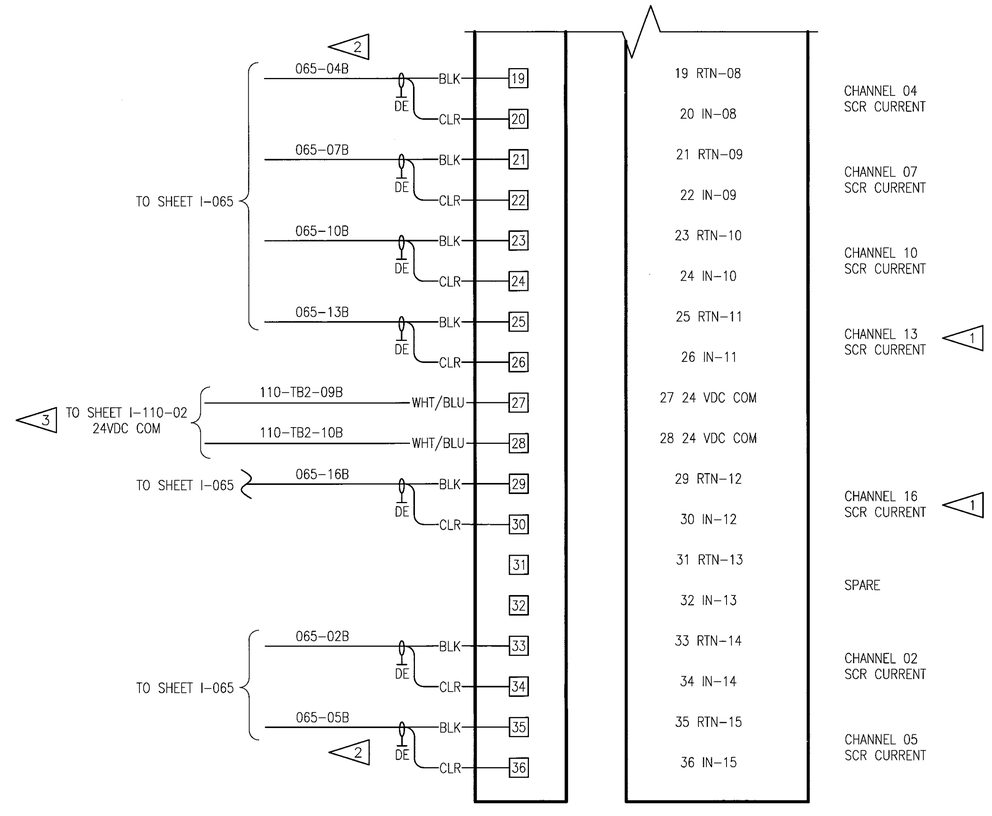

DEVELOPMENT ONE, INC.
1611 East Fourth Street, Suite 250
Santa Ana, California 92701
J.Bruce Camino, Architect, AIA, NCARB
(714) 689-0298
(714) 648-0197 FAX

DATE	SYM	REVISION	BY	A'PD
10/19/09		100% FINAL DESIGN		

NATIONAL AERONAUTICS AND SPACE ADMINISTRATION
DRYDEN FLIGHT RESEARCH CENTER
EDWARDS, CA

DRAWING TITLE
PCC SCR CONTROLLER
ANALOG INPUTS
TYPE C (SHEET 1)

PROJECT TITLE
REPAIR BUILDING 4820 FLIGHT LOADS LABORATORY
POWER CONTROL UPGRADE

APPROVALS	DATE
Chief, Facilities Engineering & Asset Mgmt. Office	6-17-10
Project Manager	5.13.10
Safety Officer	5/25/10
Project Requestor	5.22.10
Safety Officer	6-1-10
Telecom	5/26/10

DRAWN BY	M. HENNIGH	DATE STRTD	09/17/08
W.O. #	95099	DATE PRNTD	04/26/10
PLOT SCALE		TRADE Std. No.	I–035–01
CAD FILE NAME			

SHEET No. 84 of 125

NOTES:

1. PCC C3 WILL CONTAIN ONLY 12 CHANNELS (0 – 11).
2. ALL I/O SIGNAL WIRING BELDEN 8760 (#18AWG SHIELDED, TWISTED PAIR).
3. ALL 24VDC POWER WIRING SHALL BE #16AWG.

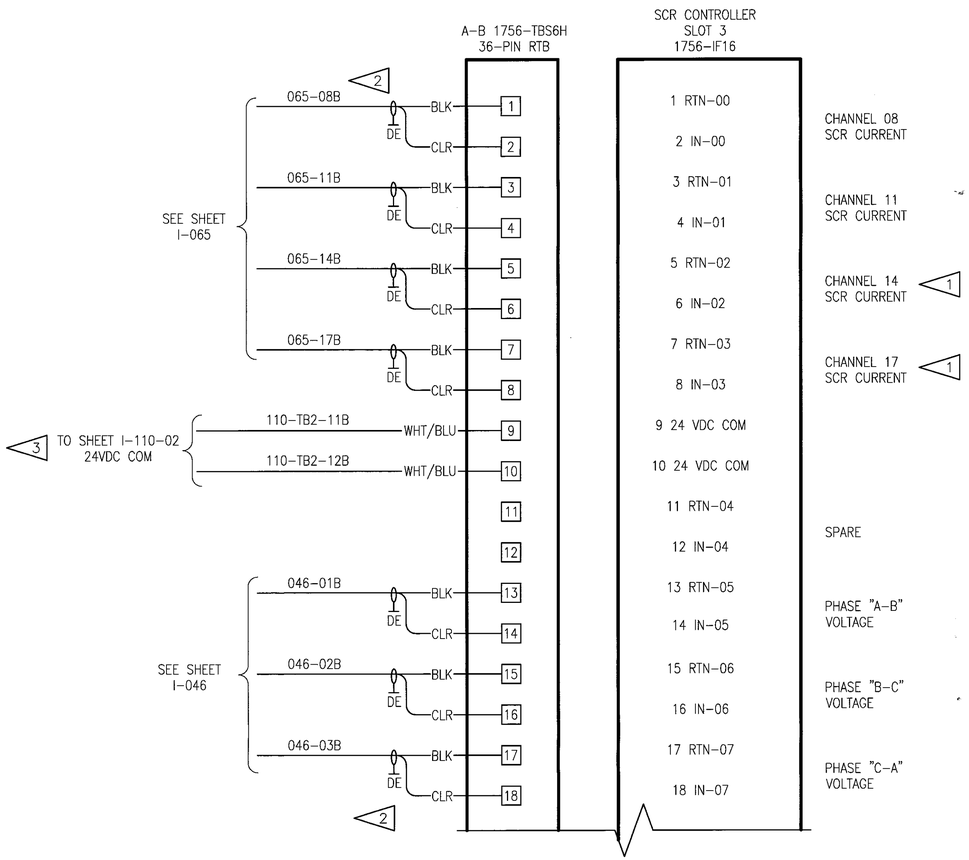

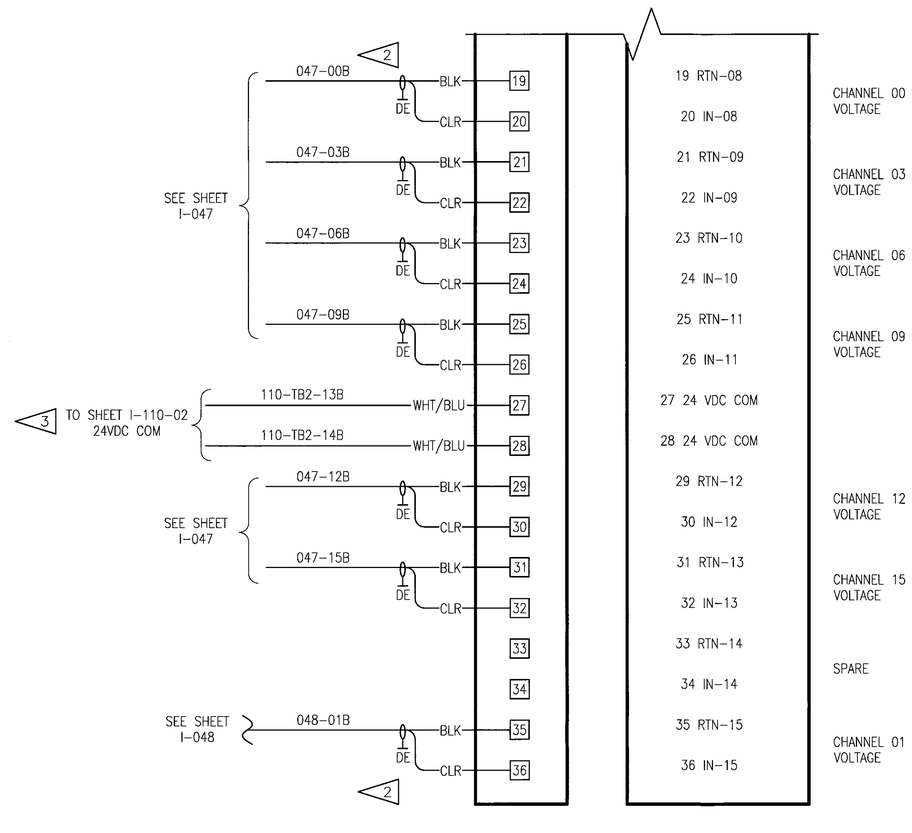

DEVELOPMENT ONE, INC.
1611 East Fourth Street, Suite 250
Santa Ana, California 92701
J.Bruce Camino, Architect, AIA, NCARB
(714) 689-0298
(714) 648-0197 FAX

DATE	SYM	REVISION	BY	A'PD
10/19/09		100% FINAL DESIGN		

NATIONAL AERONAUTICS AND SPACE ADMINISTRATION
DRYDEN FLIGHT RESEARCH CENTER
EDWARDS, CA

DRAWING TITLE
PCC SCR CONTROLLER
ANALOG INPUTS
TYPE C (SHEET 2)

PROJECT TITLE
REPAIR BUILDING 4820 FLIGHT LOADS LABORATORY
POWER CONTROL UPGRADE

APPROVALS	DATE
Chief, Facilities Engineering & Asset Mgmt. Office	6/7/10
Project Manager	5.13.10
Safety Office	5/25/10
Project Requestor	5-22-10
Safety Office	6-1-10
Telecom	5/26/10

DRAWN BY	M. HENNIGH	DATE STRTD	09/17/08
W.O. #	95099	DATE PRNTD	04/26/10
PLOT SCALE		TRADE SH. No.	I–035–02
CAD FILE NAME			SHEET No. 85 of 125

NOTES:

1. PCC C3 WILL INCLUDE ONLY 12 CHANNELS (0 – 11).
2. ALL I/O SIGNAL WIRING SHALL BE BELDEN 8760 (#18AWG SHIELDED, TWISTED PAIR)
3. ALL 24VDC POWER WIRING SHALL BE #16AWG.

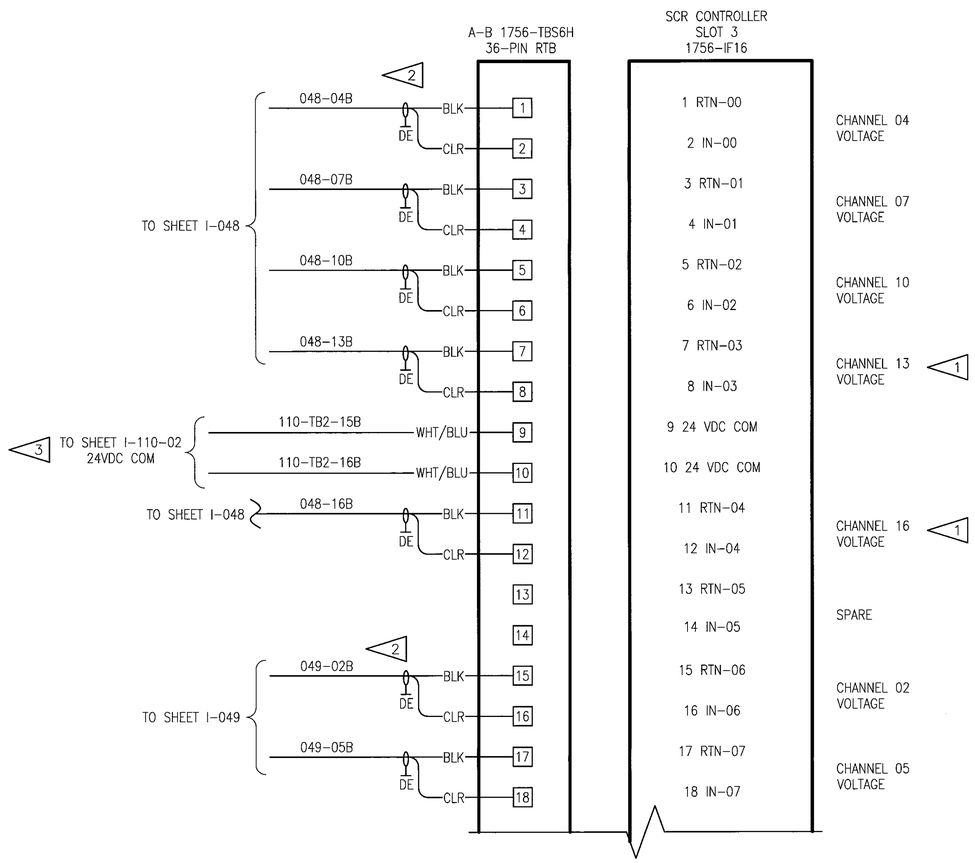

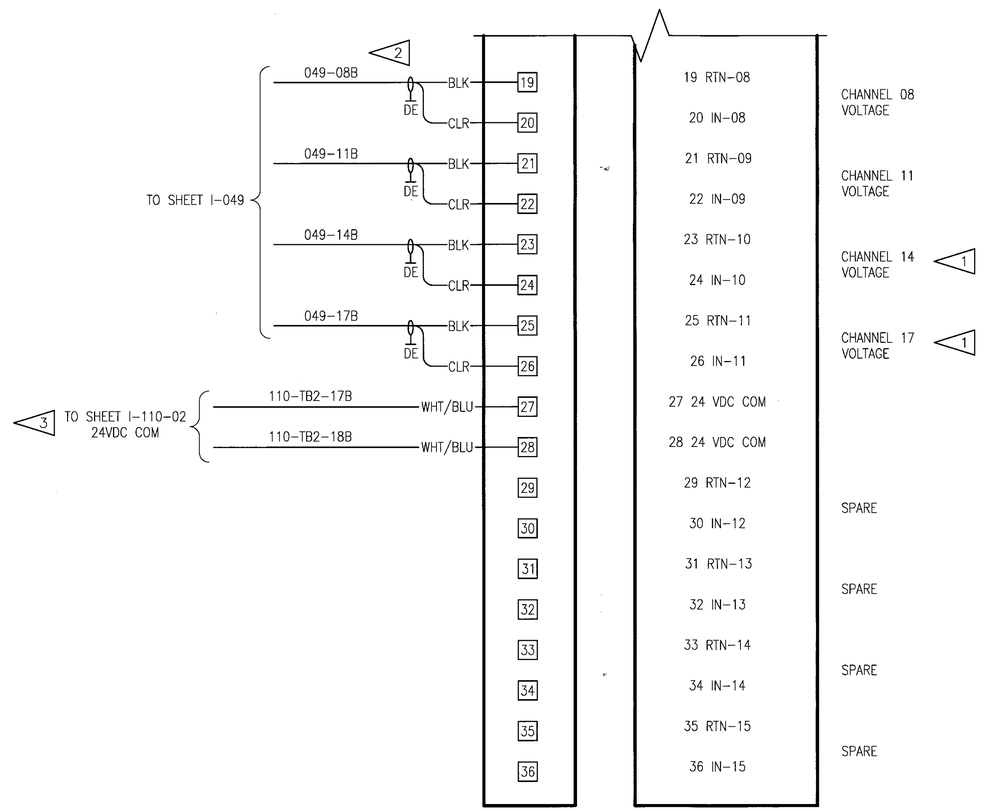

WILLIAM L. CARPENTER — REGISTERED ENGINEER — STATE OF TENNESSEE — COMMERCE — NO. 0002978

DEVELOPMENT ONE, INC.
1611 East Fourth Street, Suite 250
Santa Ana, California 92701
J.Bruce Camino, Architect, AIA, NCARB
(714) 689-0298
(714) 648-0197 FAX

DATE	SYM	REVISION	BY	A'PD
10/19/09		100% FINAL DESIGN		

NATIONAL AERONAUTICS AND SPACE ADMINISTRATION
DRYDEN FLIGHT RESEARCH CENTER
EDWARDS, CA

DRAWING TITLE
PCC SCR CONTROLLER ANALOG INPUTS TYPE C (SHEET 3)

PROJECT TITLE
REPAIR BUILDING 4820 FLIGHT LOADS LABORATORY POWER CONTROL UPGRADE

APPROVALS	DATE
Chief, Facilities Engineering & Asset Mgmt. Office	6-7-10
Project Manager	5-13-10
Security Office	5/25/10
Project Engineer	5-27-10
Safety Office	6-7-10
Telecom	5/26/10

DRAWN BY	M. HENNIGH	DATE STRTD	09/17/08
W.O. #	95099	DATE PRNTD	04/26/10
PLOT SCALE		TRADE SH. No.	I-035-03
CAD FILE NAME			

SHEET No. 86 of 125

NOTES:

1. ALL I/O SIGNAL WIRING SHALL BE BELDEN 8760 (#18AWG TWISTED, SHIELDED PAIR).
2. ALL 24VDC POWER WIRING SHALL BE #16AWG.
3. FUSING DETAIL FOR PHASE VOLTAGE TRANSMITTERS SHOWN ON SHEET I-111.

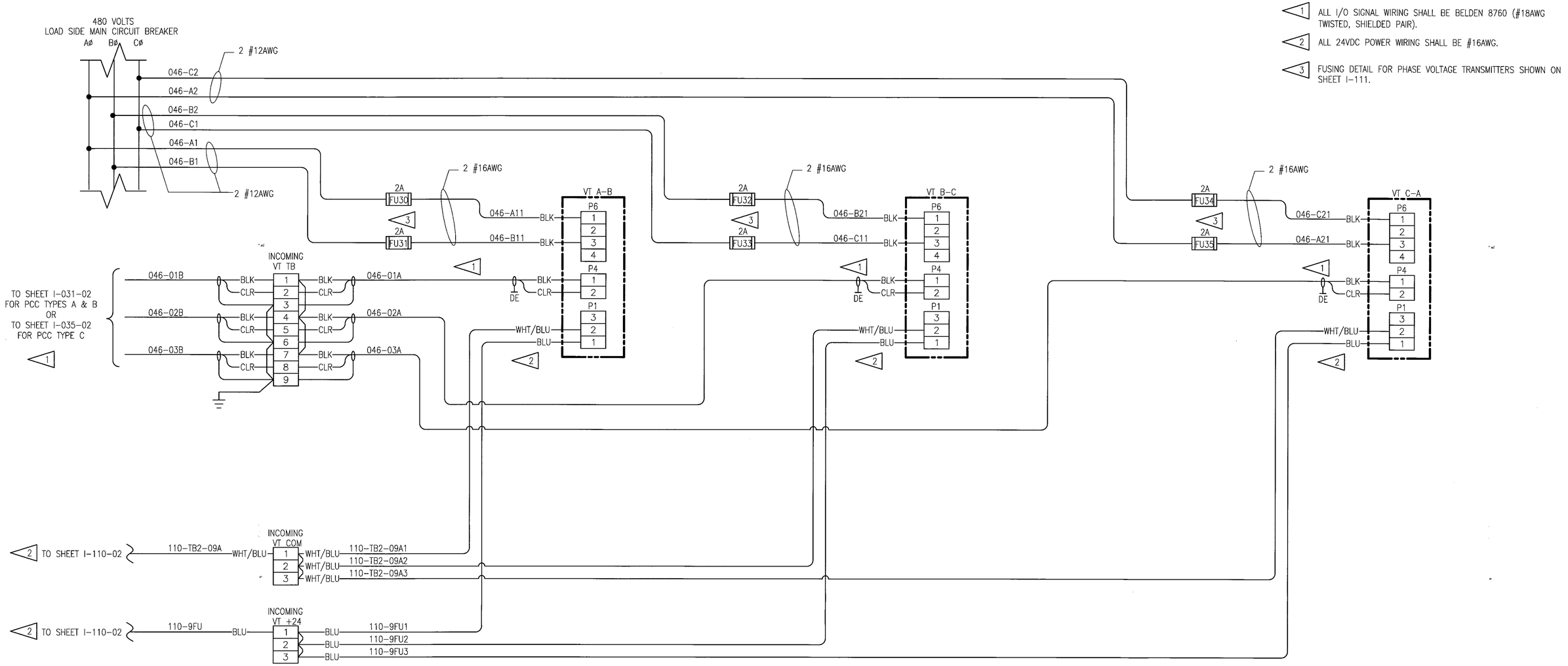

LEGEND:

VOLTAGE TRANSMITTER (LTA210RMV5) CONNECTIONS

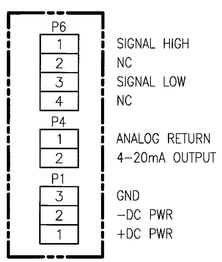

WILLIAM L. CARPENTER REGISTERED ENGINEER No. 0002979 STATE OF TENNESSEE

DEVELOPMENT ONE, INC.
1611 East Fourth Street, Suite 250
Santa Ana, California 92701
J.Bruce Camino, Architect, AIA, NCARB
(714) 689-0298
(714) 648-0197 FAX

DATE	SYM	REVISION	BY	A'PD
10/19/09		100% FINAL DESIGN		

NATIONAL AERONAUTICS AND SPACE ADMINISTRATION
DRYDEN FLIGHT RESEARCH CENTER
EDWARDS, CA

DRAWING TITLE
PCC INCOMING LINE VOLTAGE TRANSMITTERS WIRING - TYPICAL

PROJECT TITLE
REPAIR BUILDING 4820 FLIGHT LOADS LABORATORY POWER CONTROL UPGRADE

APPROVALS	DATE
Chief Facilities Engineering & Assets Mgmt. Office	6/7/10
Project Manager	5.13.10
Security Office	5/25/10
Project Engineer	5.22.10
Safety Office	6-1-10
Telecom	5/26/10

DRAWN BY	M. HENNIGH	DATE STRTD	09/17/08
W.O. #	95099	DATE PRNTD	04/26/10
PLOT SCALE		TRADE SH. No.	I-046
CAD FILE NAME			SHEET No. 87 of 125

NOTES:

1. PCC C3 WILL CONTAIN ONLY 12 CHANNELS (0–11).
2. ALL I/O SIGNAL WIRING SHALL BE BELDEN 8760 (#18AWG SHIELDED, TWISTED PAIR).
3. UNLESS OTHERWISE NOTED, ALL WIRING SHALL BE #16AWG.
4. FUSES FOR 24VDC"+" AND TERMINAL BLOCKS FOR VT 24VDC"–" CONTINUED ON SHEET I–048. LAYOUT AND BOM SHOWN ON SHEET I–107.

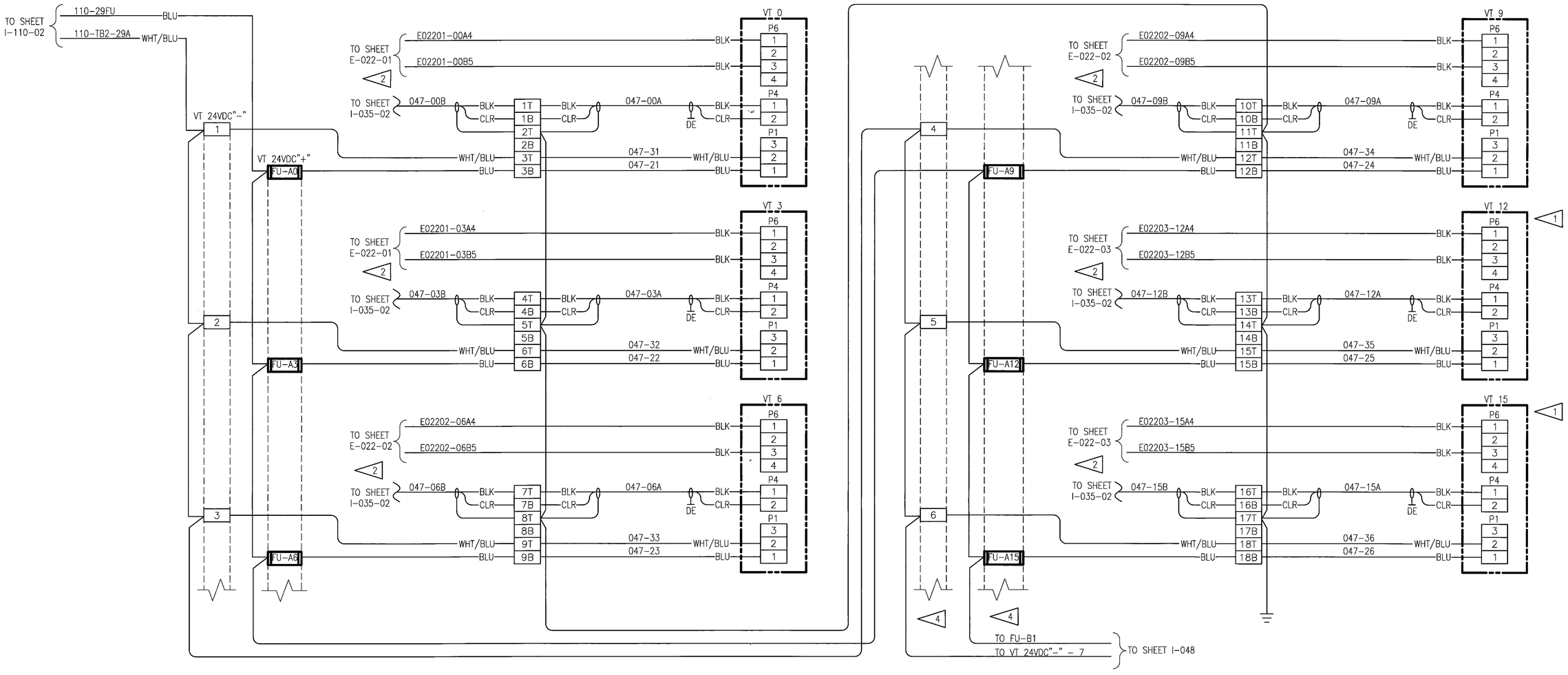

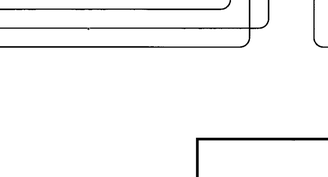

DEVELOPMENT ONE, INC.
1611 East Fourth Street, Suite 250
Santa Ana, California 92701
J.Bruce Camino, Architect, AIA, NCARB
(714) 689-0298
(714) 648-0197 FAX

DATE	SYM	REVISION	BY	A'PD
10/19/09		100% FINAL DESIGN		

NATIONAL AERONAUTICS AND SPACE ADMINISTRATION
DRYDEN FLIGHT RESEARCH CENTER
EDWARDS, CA

DRAWING TITLE
PCC TYPE C – "A" PHASE
VOLTAGE TRANSMITTERS
WIRING – TYPICAL

PROJECT TITLE
REPAIR BUILDING 4820 FLIGHT LOADS LABORATORY
POWER CONTROL UPGRADE

APPROVALS	DATE
Chief, Facilities Engineering & Assets Mgmt. Office	6.17.10
Project Manager	5.13.10
Security Office	5/25/10
Project Requestor	5.22.10
Safety Office	6.7.10
Telecom	5/24/10

DRAWN BY	M. HENNICH	DATE STRTD	09/17/08
W.O. #	95099	DATE PRNTD	04/26/10
PLOT SCALE		TRADE SH. No.	I–047
CAD FILE NAME			SHEET No. 88 of 125

NOTES:

1. PCC C3 WILL CONTAIN ONLY 12 CHANNELS (0–11).
2. ALL I/O SIGNAL WIRING SHALL BE BELDEN 8760 (#18AWG SHIELDED, TWISTED PAIR).
3. UNLESS OTHERWISE NOTED, ALL WIRING SHALL BE #16AWG.
4. FUSES FOR 24VDC"+" AND TERMINAL BLOCKS FOR VT 24VDC"–" CONTINUED FROM SHEET I–047 AND ON ON SHEET I–049. LAYOUT AND BOM SHOWN ON SHEET I–107.

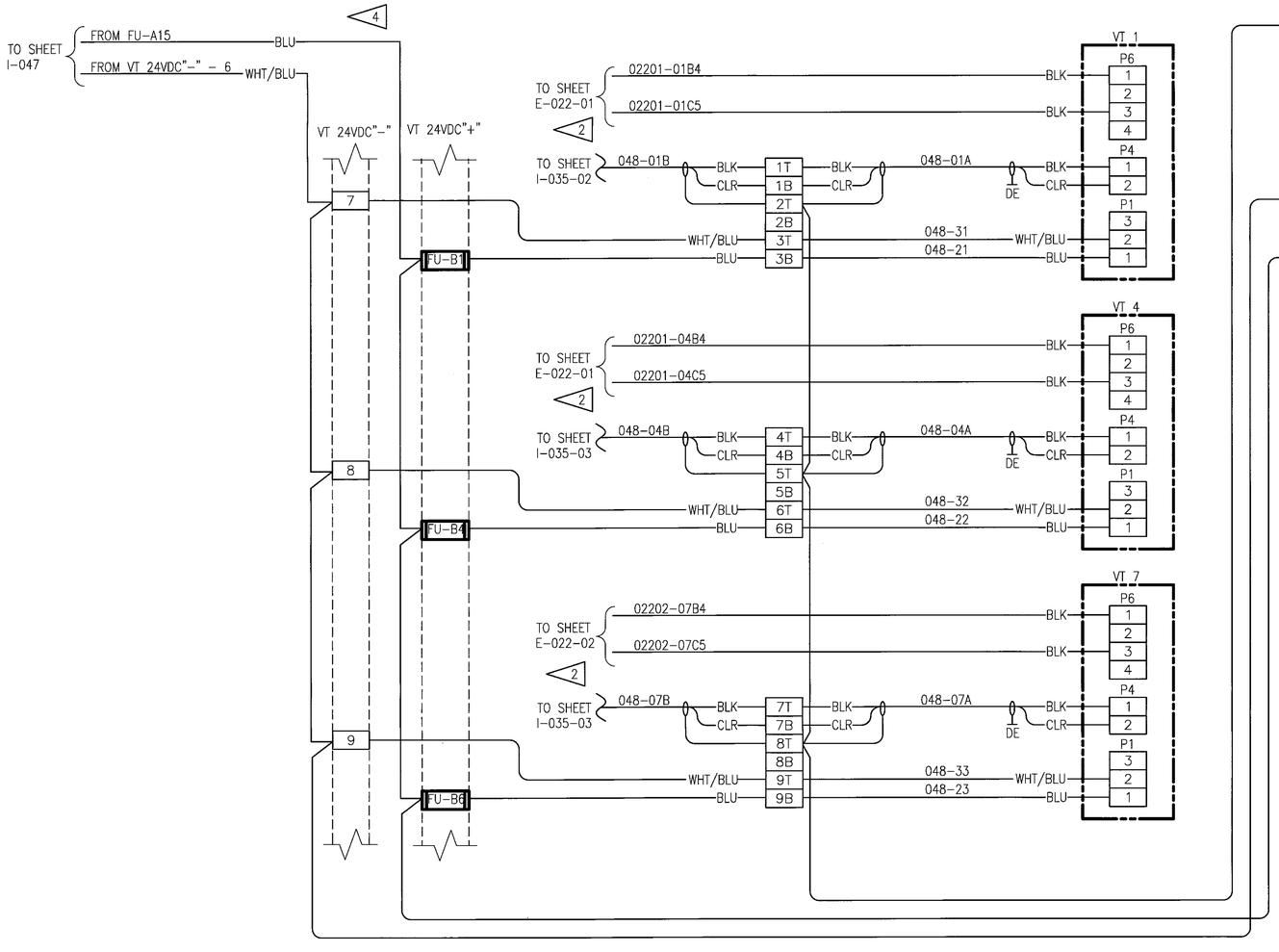

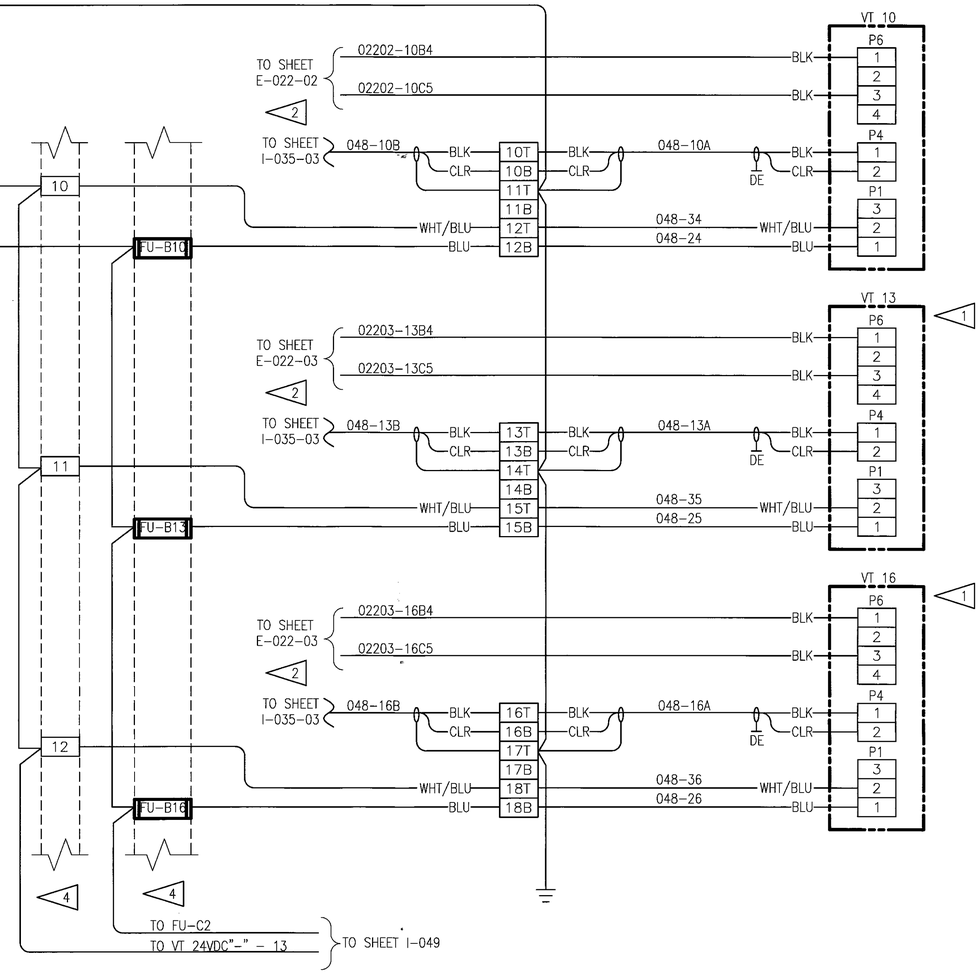

DEVELOPMENT ONE, INC.
1611 East Fourth Street, Suite 250
Santa Ana, California 92701
J.Bruce Camino, Architect, AIA, NCARB
(714) 689-0298
(714) 648-0197 FAX

DATE	SYM	REVISION	BY	A'PD
10/19/09		100% FINAL DESIGN		

NATIONAL AERONAUTICS AND SPACE ADMINISTRATION
DRYDEN FLIGHT RESEARCH CENTER
EDWARDS, CA

DRAWING TITLE
PCC TYPE C – "B" PHASE
VOLTAGE TRANSMITTERS
WIRING – TYPICAL

PROJECT TITLE
REPAIR BUILDING 4820 FLIGHT LOADS LABORATORY
POWER CONTROL UPGRADE

APPROVALS	DATE
Chief, Facilities Engineering & Asset Mgmt. Office	6/7-10
Project Manager	5.13.10
Security Office	5/25/10
Project Engineer	5-22-10
Safety Office	6-4-10
Telecom	5/24/10

DRAWN BY	M. HENNIGH	DATE SIR'D	09/17/08
W.O. #	95099	DATE PRINT'D	04/26/10
PLOT SCALE		TRADE SH. No.	I–048
CAD FILE NAME			SHEET No. 89 of 125

NOTES:

1. PCC C3 WILL CONTAIN ONLY 12 CHANNELS (0–11).
2. ALL I/O SIGNAL WIRING SHALL BE BELDEN 8760 (#18AWG SHIELDED, TWISTED PAIR).
3. UNLESS OTHERWISE NOTED, ALL WIRING SHALL BE 16AWG.
4. FUSES FOR 24VDC"+" AND TERMINAL BLOCKS FOR VT 24VDC"–" CONTINUED FROM SHEET I–048. LAYOUT AND BOM SHOWN ON SHEET I–107.

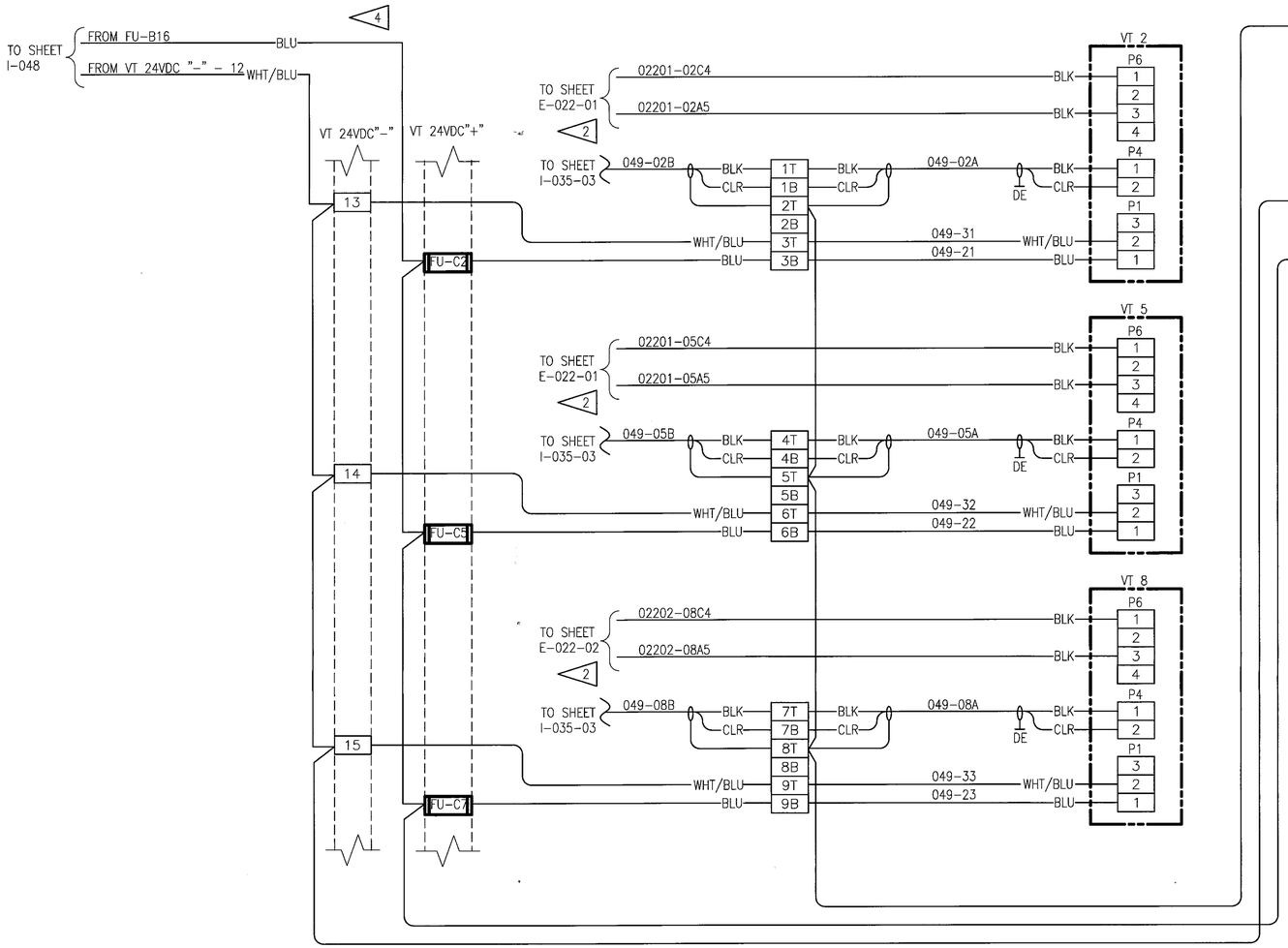

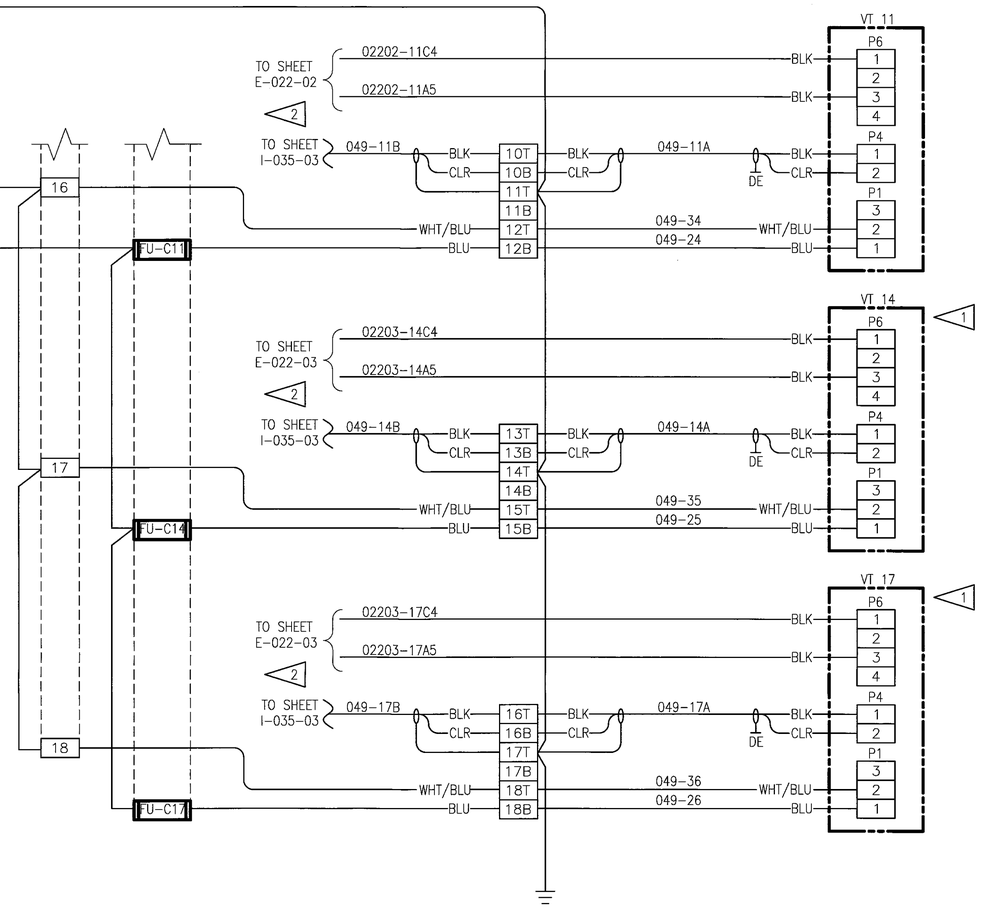

DEVELOPMENT ONE, INC.
1611 East Fourth Street, Suite 250
Santa Ana, California 92701
J.Bruce Camino, Architect, AIA, NCARB
(714) 689-0298
(714) 648-0197 FAX

DATE	SYM	REVISION	BY	A'PD
10/19/09		100% FINAL DESIGN		

NATIONAL AERONAUTICS AND SPACE ADMINISTRATION
DRYDEN FLIGHT RESEARCH CENTER
EDWARDS, CA

DRAWING TITLE
PCC TYPE C – "C" PHASE
VOLTAGE TRANSMITTERS
WIRING – TYPICAL

PROJECT TITLE
REPAIR BUILDING 4820 FLIGHT LOADS LABORATORY
POWER CONTROL UPGRADE

APPROVALS	DATE
Chief Facilities Engineering & Asset Mgmt. Office	6-17-10
Project Manager	5.13.10
Safety Office	5/25/10
Project Engineer	5.22.10
Safety Office	6-1-10
Design Agent	5/26/10

DRAWN BY	M. HENNIGH	DATE STRTD	09/17/08
W.O. #	95099	DATE PRNTD	04/26/10
PLOT SCALE		TRADE SH. No.	I–049
CAD FILE NAME			

SHEET No. 90 of 125

NOTES:

1. PCC A5 WILL CONTAIN ONLY 12 CHANNELS (0–11).
2. PCC B1 WILL CONTAIN ONLY 15 CHANNELS (0–14).
3. ALL I/O SIGNAL WIRING SHALL BE #18AWG.
4. ALL 24VDC POWER WIRING SHALL BE #16AWG.
5. ALL TRIGGER TO SCR WIRING SHALL BE #16AWG. CONFIRM TRIGGER MODULE TO SCR INTERCONNECT WITH ACTUAL SCR DEVICES AS RECEIVED PRIOR TO TERMINATION.

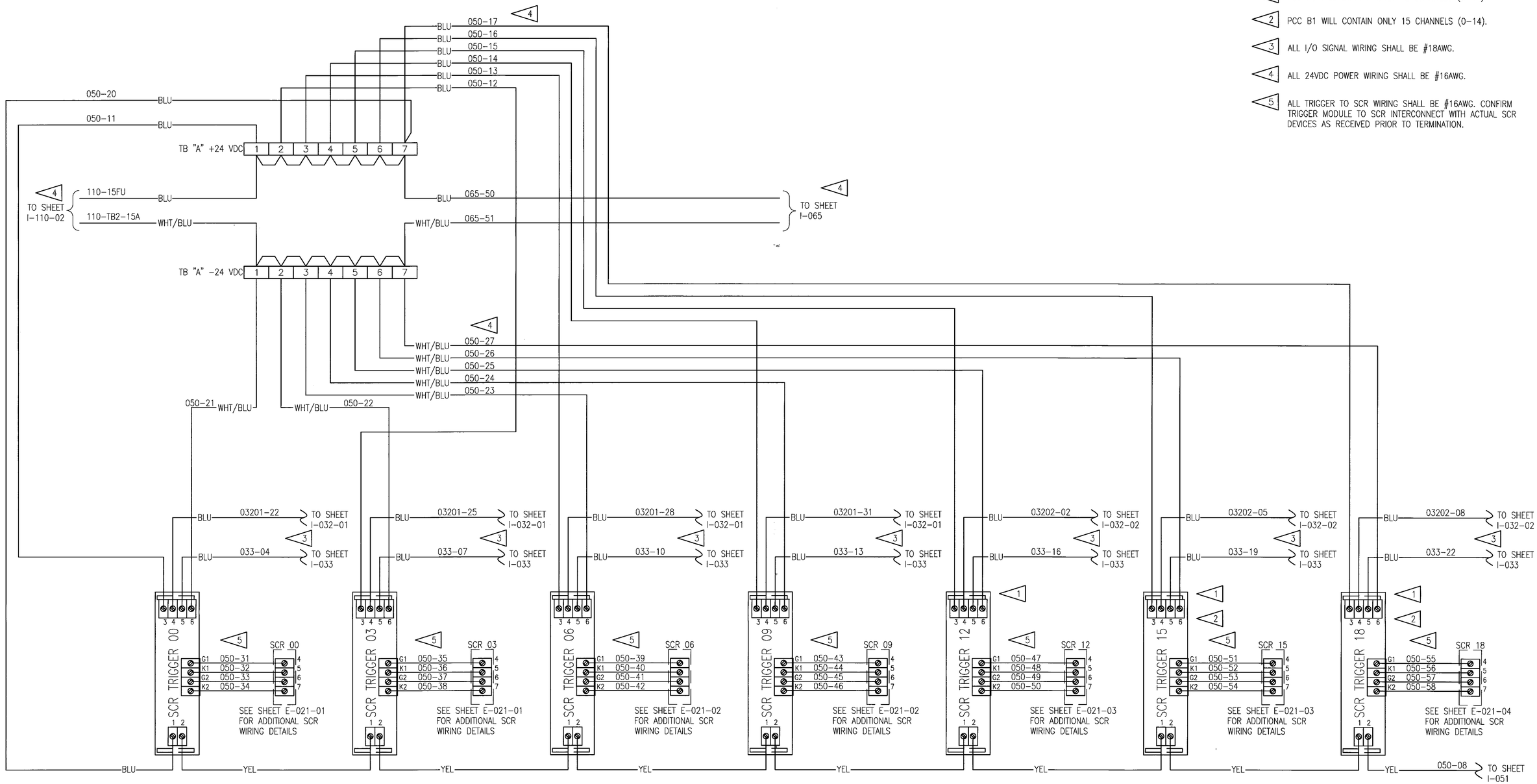

DEVELOPMENT ONE, INC.
1611 East Fourth Street, Suite 250
Santa Ana, California 92701
J.Bruce Camino, Architect, AIA, NCARB
(714) 689-0298
(714) 648-0197 FAX

DATE	SYM	REVISION	BY	A'PD
10/19/09		100% FINAL DESIGN		

NATIONAL AERONAUTICS AND SPACE ADMINISTRATION
DRYDEN FLIGHT RESEARCH CENTER
EDWARDS, CA

DRAWING TITLE
PCC "A" PHASE SCR
ZERO FIRED TRIGGER MODULE
WIRING DIAGRAM – TYPICAL

PROJECT TITLE
REPAIR BUILDING 4820 FLIGHT LOADS LABORATORY
POWER CONTROL UPGRADE

APPROVALS	DATE
Chief, Facilities Engineering & Asset Mgmt. Office	6-17-10
Project Manager	5.13.10
Security Office	5/25/10
Project Requestor	6-22-10
Safety Office	6-4-10
Telecom	5/24/10

DRAWN BY	M. HENNIGH	DATE STRTD	09/17/08
W.O. #	95099	DATE PRNTD	04/26/10
PLOT SCALE		TRADE SHL No.	I–050
CAD FILE NAME			SHEET No. 91 of 125

NOTES:

1. PCC A5 WILL CONTAIN ONLY 12 CHANNELS (0–11).
2. PCC B1 WILL CONTAIN ONLY 15 CHANNELS (0–14).
3. ALL I/O SIGNAL WIRING SHALL BE #18AWG.
4. ALL 24VDC POWER WIRING SHALL BE #16AWG.
5. ALL TRIGGER TO SCR WIRING SHALL BE #16AWG. CONFIRM TRIGGER MODULE TO SCR INTERCONNECT WITH ACTUAL SCR DEVICES AS RECEIVED PRIOR TO TERMINATION.

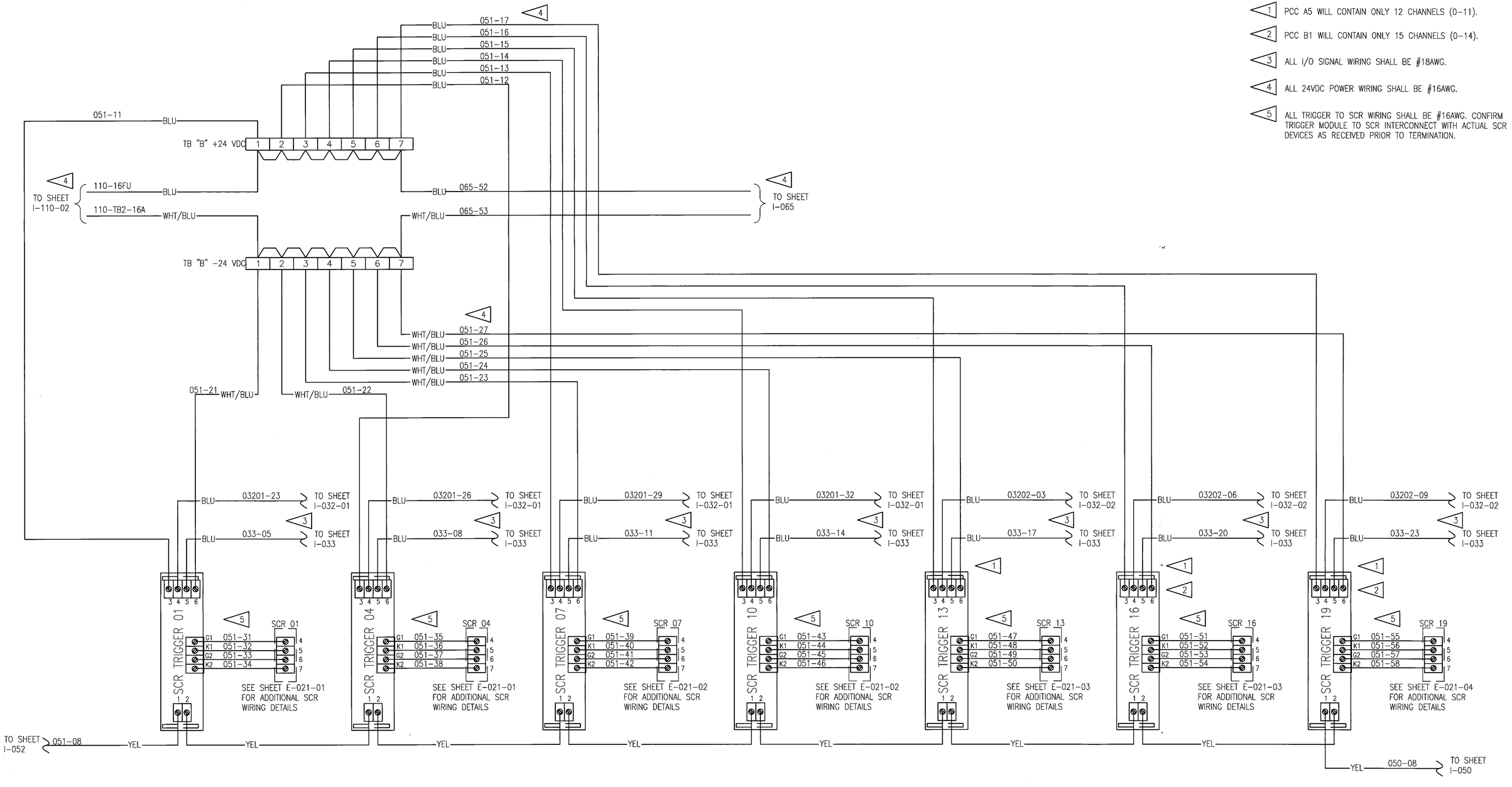

DEVELOPMENT ONE, INC.
1611 East Fourth Street, Suite 250
Santa Ana, California 92701
J.Bruce Camino, Architect, AIA, NCARB
(714) 689-0298
(714) 648-0197 FAX

DATE	SYM	REVISION	BY	A'PD
10/19/09		100% FINAL DESIGN		

NATIONAL AERONAUTICS AND SPACE ADMINISTRATION
DRYDEN FLIGHT RESEARCH CENTER
EDWARDS, CA

DRAWING TITLE
PCC "B" PHASE SCR
ZERO FIRED TRIGGER MODULE
WIRING DIAGRAM – TYPICAL

PROJECT TITLE
REPAIR BUILDING 4820 FLIGHT LOADS LABORATORY
POWER CONTROL UPGRADE

APPROVALS	DATE
Chief Facilities Engineering & Asset Mgmt. Office	6-17-10
Project Manager	5-13-10
Security Office	5/25/10
Project Requestor	5-22-10
Safety Office	6-1-10
Telecom	5/24/10

DRAWN BY	M. HENNIGH	DATE STRTD	09/17/08
W.O. #	95099	DATE PRNTD	04/26/10
PLOT SCALE		TRADE SH. No.	I–051
CAD FILE NAME			SHEET No. 92 of 125

NOTES:

1. PCC A5 WILL CONTAIN ONLY 12 CHANNELS (0–11).
2. PCC B1 WILL CONTAIN ONLY 15 CHANNELS (0–14).
3. ALL I/O SIGNAL WIRING SHALL BE #18AWG.
4. ALL 24VDC POWER WIRING SHALL BE #16AWG.
5. ALL TRIGGER TO SCR WIRING SHALL BE #16AWG. CONFIRM TRIGGER MODULE TO SCR INTERCONNECT WITH ACTUAL SCR DEVICES AS RECEIVED PRIOR TO TERMINATION.

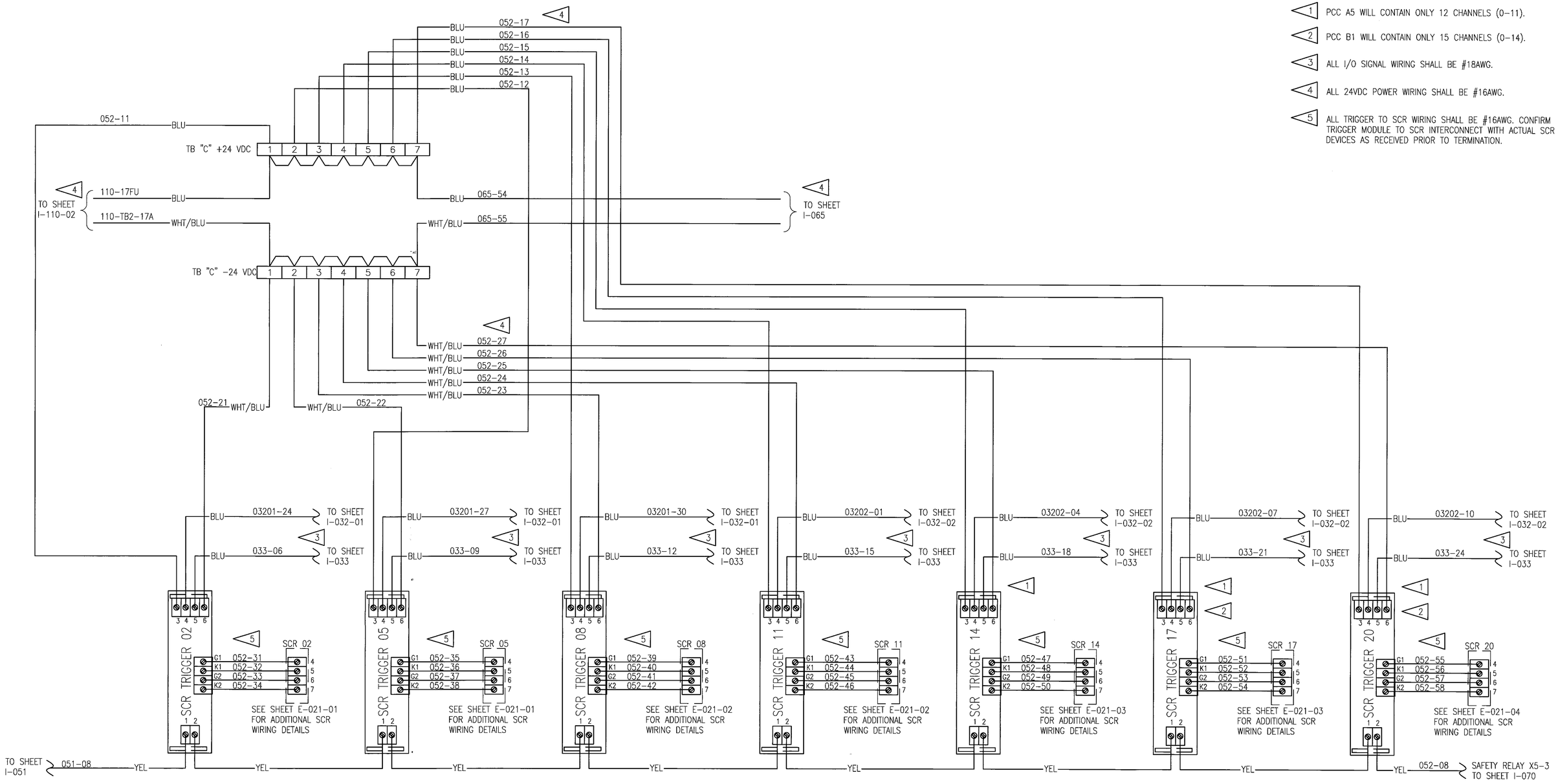

DEVELOPMENT ONE, INC.
1611 East Fourth Street, Suite 250
Santa Ana, California 92701
J.Bruce Camino, Architect, AIA, NCARB
(714) 689-0298
(714) 648-0197 FAX

WILLIAM L. CARPENTER REGISTERED ENGINEER No. 0002278 COMMERCE STATE OF TENNESSEE

DATE	SYM	REVISION	BY	A'PD
10/19/09		100% FINAL DESIGN		

NATIONAL AERONAUTICS AND SPACE ADMINISTRATION
DRYDEN FLIGHT RESEARCH CENTER
EDWARDS, CA

DRAWING TITLE
PCC "C" PHASE SCR
ZERO FIRED TRIGGER MODULE
WIRING DIAGRAM – TYPICAL

PROJECT TITLE
REPAIR BUILDING 4820 FLIGHT LOADS LABORATORY
POWER CONTROL UPGRADE

APPROVALS	DATE
Chief, Facilities Engineering & Asset Mgmt. Office	6-7-10
Project Manager	5.13.10
Security Office	5/15/10
Project Inspector	5-22-10
Safety Office	6-7-10
Telecom	5/24/10

DRAWN BY	M. HENNIGH	DATE STRTD	09/17/08
W.O. #	95099	DATE PRNTD	04/26/10
PLOT SCALE		TRADE SH. No.	I–052
CAD FILE NAME			SHEET No. 93 of 125

NOTES:

1. PCC A5 AND PCC C3 WILL CONTAIN ONLY 12 CHANNELS (0–11), GFCTs (12–19) WILL NOT BE PRESENT.
2. PCC B1 WILL CONTAIN ONLY 15 CHANNELS (0–14), GFCTs (15–19) WILL NOT BE PRESENT.
3. PCC C1 AND PCC C2 WILL CONTAIN ONLY 18 CHANNELS (0–17), GFCTs (18 & 19) WILL NOT BE PRESENT.

4 ALL I/O SIGNAL WIRING SHALL BE #18AWG.

5 ALL 24VDC POWER WIRING SHALL BE #16AWG.

6 ALL GFCT WIRING SHALL BE #18AWG.

7. RESIDUAL CURRENT MONITORING SYSTEM CT'S ARE BENDER W60 TRANSFORMERS.

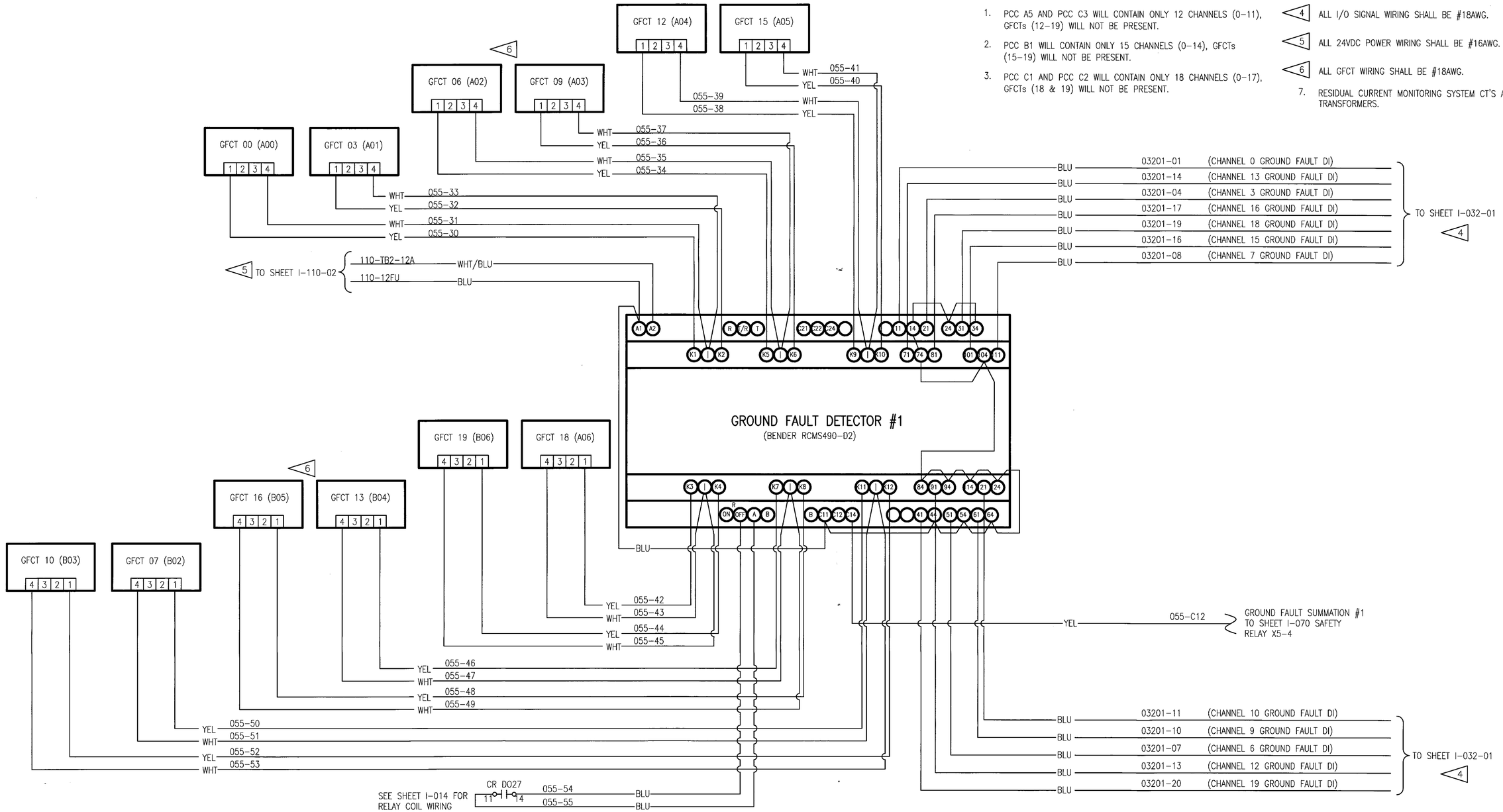

WILLIAM L. CARPENTER JR. REGISTERED ENGINEER COMMERCE NO. 00022979 STATE OF TENNESSEE

DEVELOPMENT ONE, INC.
1611 East Fourth Street, Suite 250
Santa Ana, California 92701
J.Bruce Camino, Architect, AIA, NCARB
(714) 689-0298
(714) 648-0197 FAX

DATE	SYM	REVISION	BY	A'PD
10/19/09		100% FINAL DESIGN		

NATIONAL AERONAUTICS AND SPACE ADMINISTRATION
DRYDEN FLIGHT RESEARCH CENTER
EDWARDS, CA

DRAWING TITLE
PCC GROUND FAULT
UNIT #1 WIRING
TYPICAL

PROJECT TITLE
REPAIR BUILDING 4820 FLIGHT LOADS LABORATORY
POWER CONTROL UPGRADE

APPROVALS		DATE
Chief, Facilities Engineering & Asset Mgmt. Office	Dan Cowley	6-17-10
Project Manager	Mark W. Mahon	5.13.10
Security Office	[signature]	5/25/10
Project Requestor	Thomas J. Horn	5-22-10
Safety Office	[signature]	6-1-10
Telecom	[signature]	5/26/10

DRAWN BY	M. HENNIGH	DATE STRTD	09/17/08
W.O. #	95099	DATE PRNTD	04/26/10
PLOT SCALE		TRADE SH. No.	I-055
CAD FILE NAME			

SHEET No. 94 of 125

NOTES:

1. PCC A5 AND PCC C3 WILL CONTAIN ONLY 12 CHANNELS (0–11), GFCTs (12–20) WILL NOT BE PRESENT.
2. PCC C1 AND PCC C2 WILL CONTAIN ONLY 18 CHANNELS (0–17), GFCT (18–20) WILL NOT BE PRESENT.
3. PCC B1 WILL CONTAIN ONLY 15 CHANNELS (0–14). GFCTs (15 AND 20) WILL NOT BE PRESENT.

4 ALL I/O SIGNAL WIRING SHALL BE #18AWG.

5 ALL 24VDC POWER WIRING SHALL BE #16AWG.

6 ALL GFCT WIRING SHALL BE #18AWG.

7. RESIDUAL CURRENT MONITORING SYSTEM CT'S ARE BENDER W60 TRANSFORMERS.

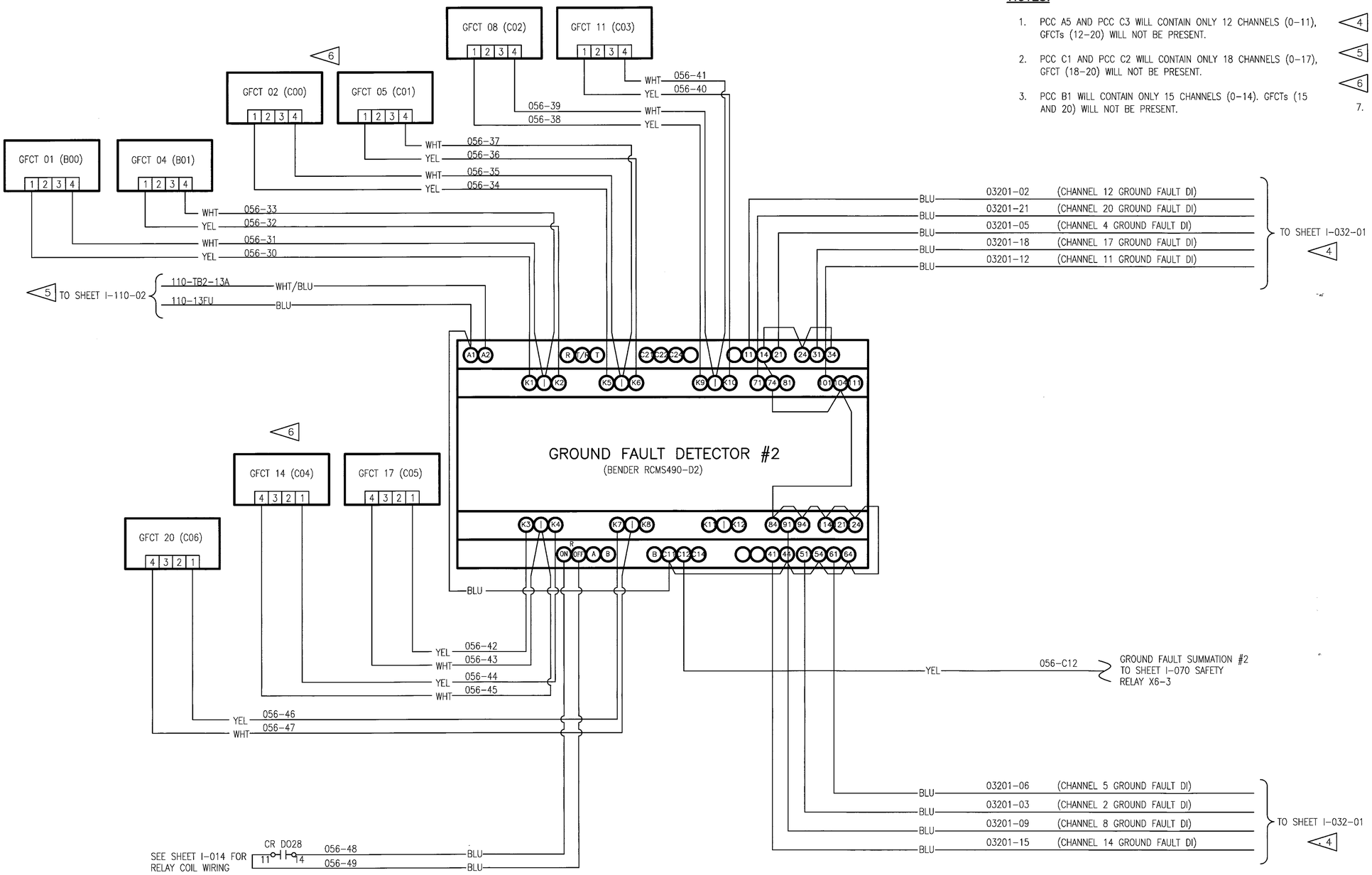

WILLIAM L. CARPENTER
REGISTERED ENGINEER
No. 0002878
STATE OF TENNESSEE

DEVELOPMENT ONE, INC.
1611 East Fourth Street, Suite 250
Santa Ana, California 92701
J.Bruce Camino, Architect, AIA, NCARB
(714) 689-0298
(714) 648-0197 FAX

DATE	SYM	REVISION	BY	A'PD
10/19/09		100% FINAL DESIGN		

NATIONAL AERONAUTICS AND SPACE ADMINISTRATION
DRYDEN FLIGHT RESEARCH CENTER
EDWARDS, CA

DRAWING TITLE
PCC GROUND FAULT
UNIT #2 WIRING
TYPICAL

PROJECT TITLE
REPAIR BUILDING 4820 FLIGHT LOADS LABORATORY
POWER CONTROL UPGRADE

APPROVALS	DATE
Chief, Facilities Engineering & Assets Mgmt. Office	6-12-10
Project Manager	5.13.10
Security Office	5/25/10
Project Requestor	5-27-10
Safety Office	6-7-10
Telecom	5/26/10

DRAWN BY	M. HENNIGH	DATE STRTD	09/17/08
W.O. #	95099	DATE PRNTD	04/26/10
PLOT SCALE		TRADE SH. No.	I-056
CAD FILE NAME			SHEET No. 95 of 125

NOTES:

1. PCC C3 WILL CONTAIN ONLY 12 CHANNELS (0–11).
2. ALL I/O SIGNAL WIRING SHALL BE #18AWG (BELDEN 8760).
3. ALL 24VDC POWER WIRING SHALL BE #16AWG.
4. ALL FIRING MODULE TO SCR WIRING SHALL BE #16AWG. CONFIRM FIRING MODULE TO SCR INTERCONNECT WITH ACTUAL SCR DEVICES AS RECEIVED PRIOR TO TERMINATION.

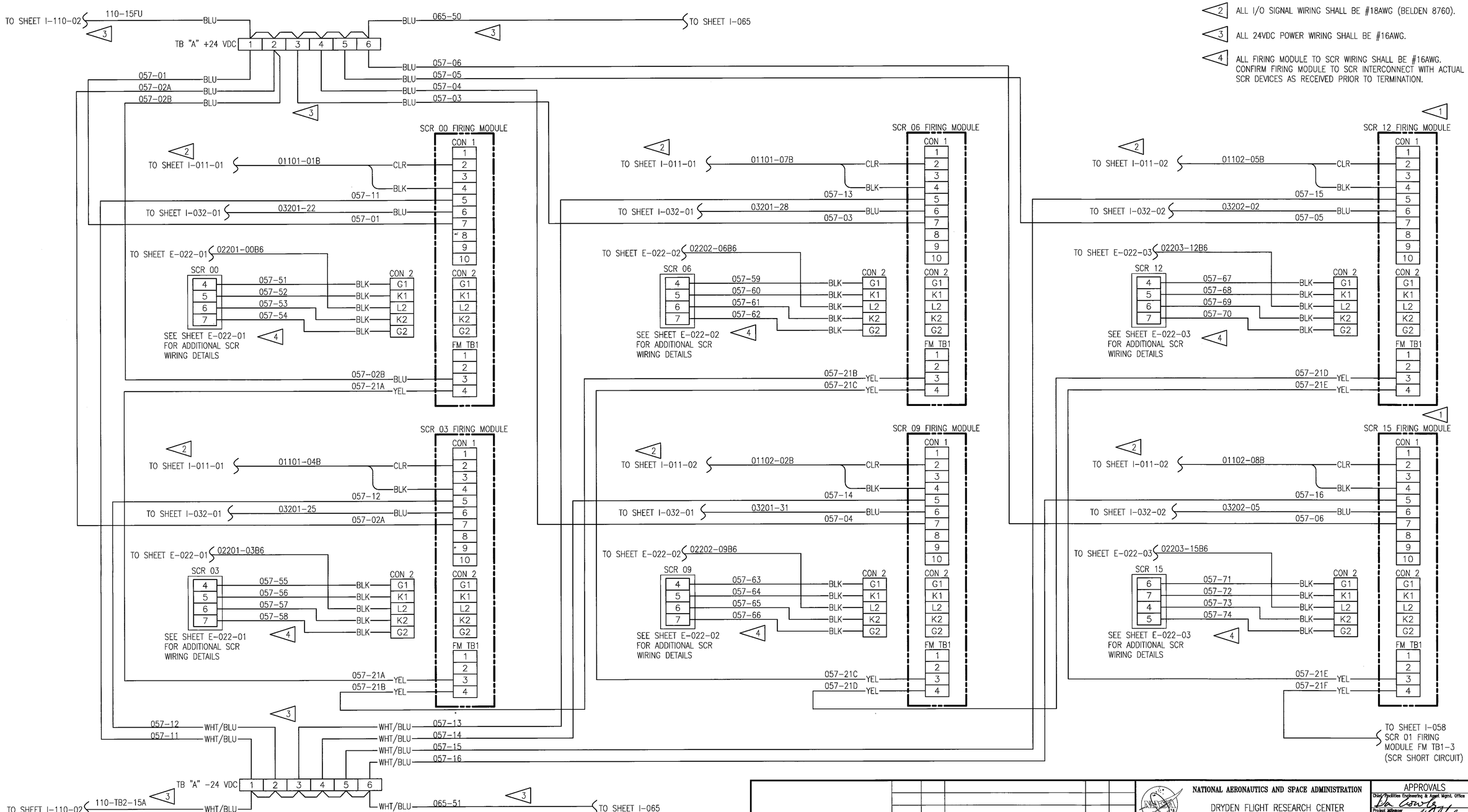

DEVELOPMENT ONE, INC.
1611 East Fourth Street, Suite 250
Santa Ana, California 92701
J.Bruce Camino, Architect, AIA, NCARB
(714) 689-0298
(714) 648-0197 FAX

DATE	SYM	REVISION	BY	A'PD
10/19/09		100% FINAL DESIGN		

WILLIAM L. CARPENTER JR. REGISTERED ENGINEER LICENSE NO. 0302979 STATE OF TENNESSEE

NATIONAL AERONAUTICS AND SPACE ADMINISTRATION
DRYDEN FLIGHT RESEARCH CENTER
EDWARDS, CA

DRAWING TITLE
PCC PHASE ANGLE CONTROL
PHASE "A" FIRING MODULE
WIRING – TYPICAL

PROJECT TITLE
REPAIR BUILDING 4820 FLIGHT LOADS LABORATORY
POWER CONTROL UPGRADE

APPROVALS	DATE
Chief, Facilities Engineering & Asset Mgmt. Office	6-17-10
Project Manager	5-13-10
Safety Office	5/25/10
Project Requestor	5-22-10
Safety Office	6-1-10
Telecom	5/26/10

DRAWN BY	M. HENNIGH	DATE STRTD	09/17/08
W.O. #	95099	DATE PRNTD	04/26/10
PLOT SCALE		TRADE SH. No.	I-057
CAD FILE NAME			SHEET No. 96 of 125

NOTES:

1. PCC C3 WILL CONTAIN ONLY 12 CHANNELS (0-11).
2. ALL I/O SIGNAL WIRING SHALL BE #18AWG (BELDEN 8760).
3. ALL 24VDC POWER WIRING SHALL BE #16AWG.
4. ALL FIRING MODULE TO SCR WIRING SHALL BE #16AWG. CONFIRM FIRING MODULE TO SCR INTERCONNECT WITH ACTUAL SCR DEVICES AS RECEIVED PRIOR TO TERMINATION.

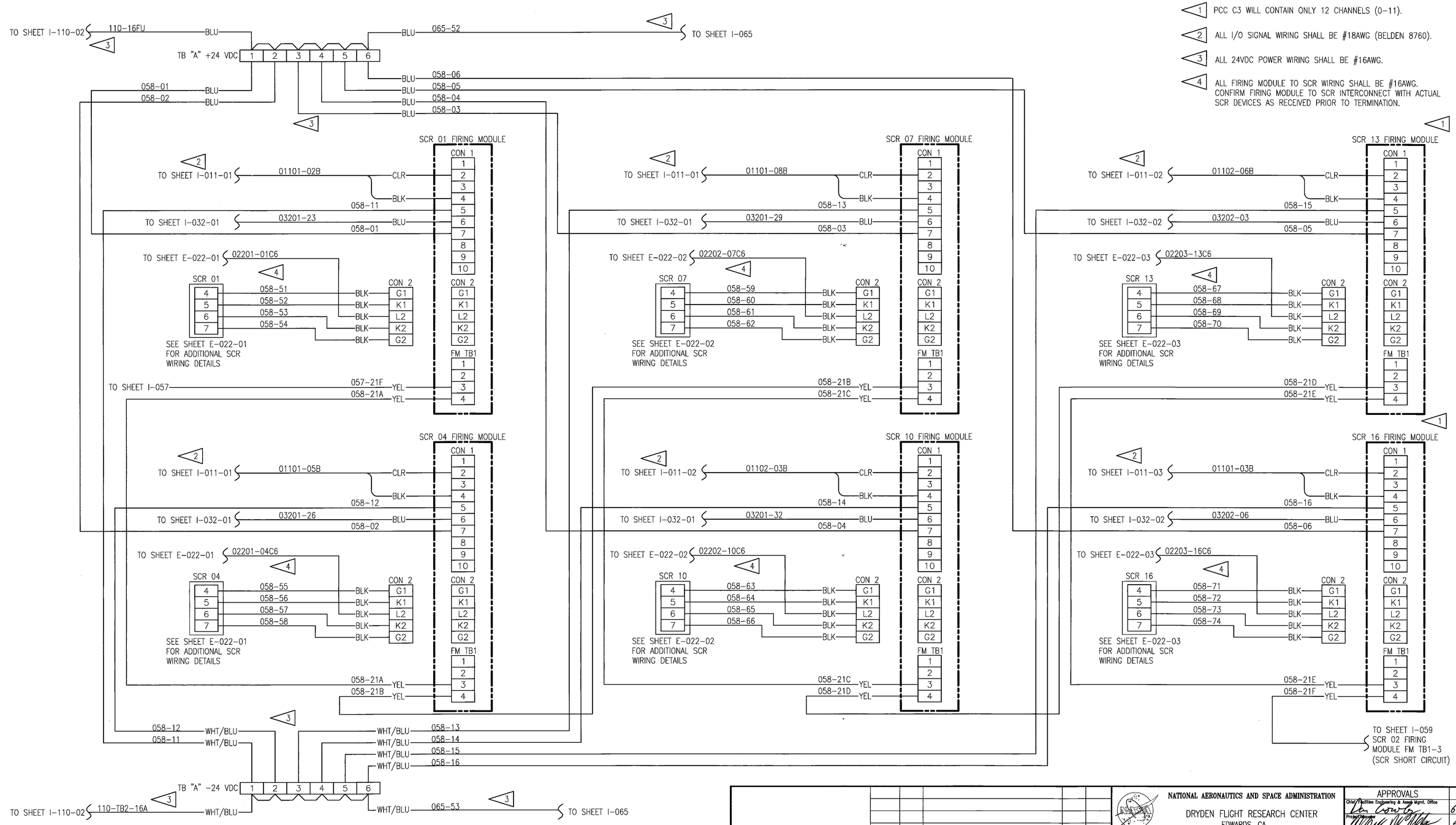

WILLIAM L. CARPENTER
REGISTERED ENGINEER
AGRICULTURE
COMMERCE
NO. 00022979
STATE OF TENNESSEE

DEVELOPMENT ONE, INC.
1611 East Fourth Street, Suite 250
Santa Ana, California 92701
J.Bruce Camino, Architect, AIA, NCARB
(714) 689-0298
(714) 648-0197 FAX

DATE	SYM	REVISION	BY	A'PD
10/19/09		100% FINAL DESIGN		

NATIONAL AERONAUTICS AND SPACE ADMINISTRATION
DRYDEN FLIGHT RESEARCH CENTER
EDWARDS, CA

DRAWING TITLE
PCC PHASE ANGLE CONTROL
PHASE "B" FIRING MODULE
WIRING – TYPICAL

PROJECT TITLE
REPAIR BUILDING 4820 FLIGHT LOADS LABORATORY
POWER CONTROL UPGRADE

APPROVALS	DATE
Chief Facilities Engineering & Assets Mgmt. Office	6-17-10
Project Manager	5.13.10
Security Office	5/25/10
Project Requestor	5-22-10
Safety Office	6-1-10
Telecom	5/26/10

DRAWN BY	M. HENNIGH	DATE STRTD	09/17/08
W.O. #	95099	DATE PRNTD	04/26/10
PLOT SCALE		TRADE SH. No.	I-058
CAD FILE NAME			

SHEET No. 97 of 125

NOTES:

1. PCC C3 WILL CONTAIN ONLY 12 CHANNELS (0-11).
2. ALL I/O SIGNAL WIRING SHALL BE #18AWG (BELDEN 8760).
3. ALL 24VDC POWER WIRING SHALL BE #16AWG.
4. ALL FIRING MODULE TO SCR WIRING SHALL BE #16AWG. CONFIRM FIRING MODULE TO SCR INTERCONNECT WITH ACTUAL SCR DEVICES AS RECEIVED PRIOR TO TERMINATION.

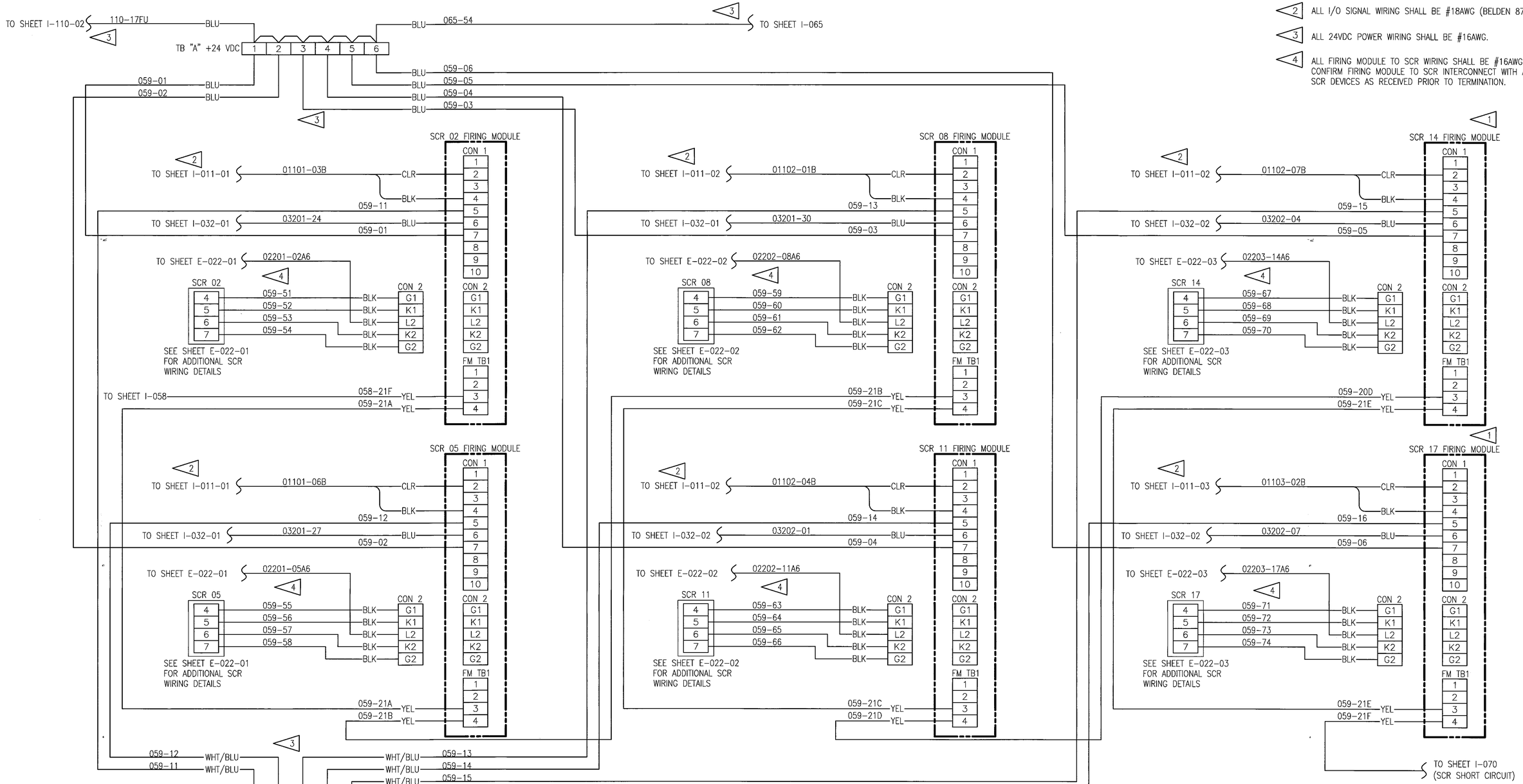

DEVELOPMENT ONE, INC.
1611 East Fourth Street, Suite 250
Santa Ana, California 92701
J.Bruce Camino, Architect, AIA, NCARB
(714) 689-0298
(714) 648-0197 FAX

WILLIAM L. CARPENTER II — REGISTERED ENGINEER — COMMERCE — NO. 0022979 — STATE OF TENNESSEE

DATE	SYM	REVISION	BY	A'PD
10/19/09		100% FINAL DESIGN		

NATIONAL AERONAUTICS AND SPACE ADMINISTRATION
DRYDEN FLIGHT RESEARCH CENTER
EDWARDS, CA

DRAWING TITLE
PCC PHASE ANGLE CONTROL
PHASE "C" FIRING MODULE
WIRING - TYPICAL

PROJECT TITLE
REPAIR BUILDING 4820 FLIGHT LOADS LABORATORY
POWER CONTROL UPGRADE

APPROVALS	DATE
Chief, Electrical Engineering & Asset Mgmt. Office	6-17-10
Project Manager	5.13.10
Security Office	5/25/10
Project Requestor	5-22-10
Safety Office	6-4-10
Telecom	5/24/10

DRAWN BY	M. HENNIGH	DATE STRTD	09/17/08
W.O. #	95099	DATE PRNTD	04/26/10
PLOT SCALE		TRADE SH. No.	I-059
CAD FILE NAME			

SHEET No. 98 of 125

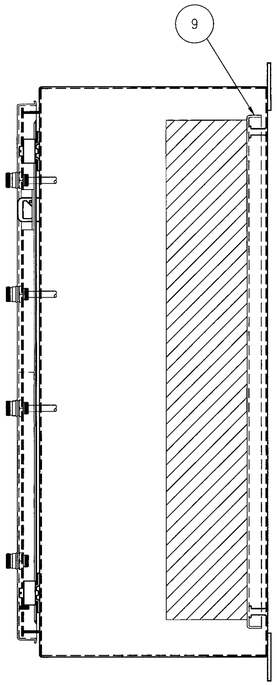

PATCH PANEL SIDE VIEW
SCALE: 1:4

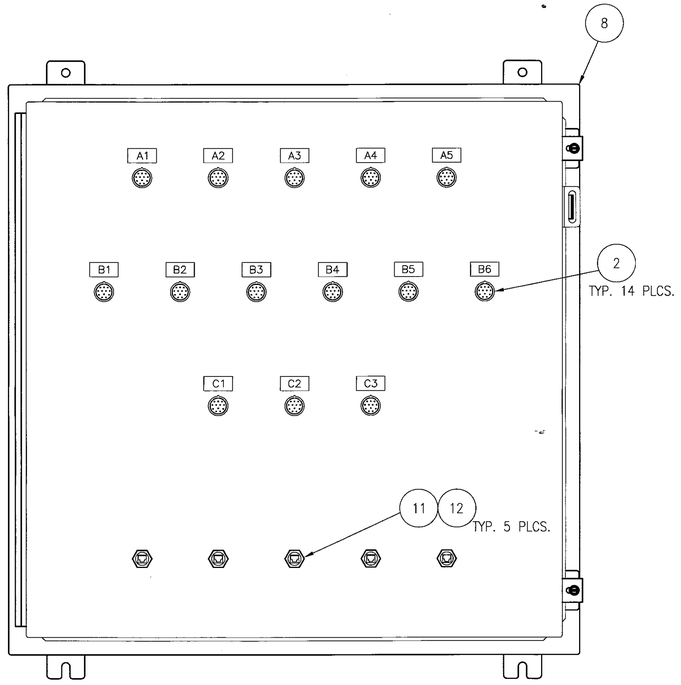

PATCH PANEL FRONT VIEW
SCALE: 1:4

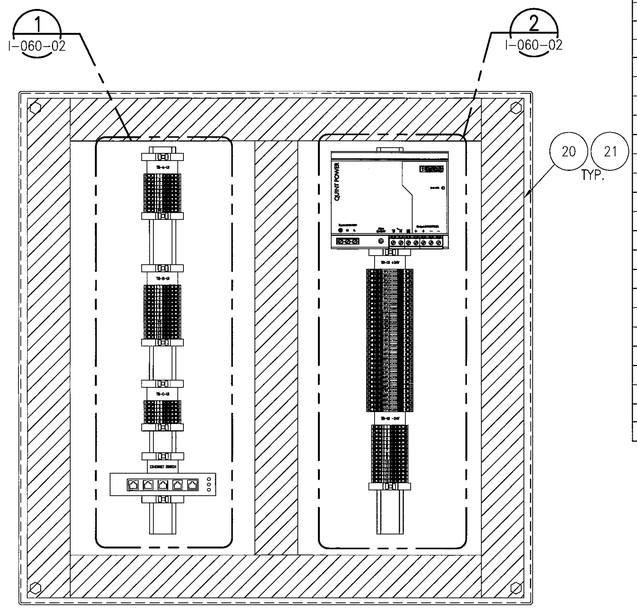

BACK PANEL LAYOUT
SCALE: 1:4

BILL OF MATERIAL				
ITEM	QTY	DESCRIPTION	MANUFACTURER	PART NUMBER
1	5	SAFETY WIRED DISTRIBUTION BOX (BOX TO BARE CABLE 10M)	ALLEN-BRADLEY	898D-P48JT-A10
2	14	RECEPT. M23 MALE, PANEL MOUNT, CABLE BULKHEAD MALE CONNECTOR	ALLEN-BRADLEY	888M-M12AE-6F
3	5	CORDSET, M23 STYLE, 12 PIN (20M) CABLE FEMALE CONNECTOR	ALLEN-BRADLEY	889M-F12AH-20
4	19	SOLDER, M23 STYLE, FEMALE CONNECTOR	ALLEN-BRADLEY	889M-F12AH-T
5	5	SOLDER, M23 STYLE, MALE CONNECTOR	ALLEN-BRADLEY	889M-M12AH-T
6	40	FIELD ATTACHABLE MALE CONNECTOR, DC MICRO STYLE	ALLEN-BRADLEY	889D-M4DC-H
7	40	SHORTING PLUG	ALLEN-BRADLEY	898D-41KU-DM
8	1	ENCLOSURE, WALL MOUNT TYPE 12 (30" x 30" x 12")	HOFFMAN	A303012LP
9	1	BACK PANEL (27" x 27")	HOFFMAN	A30P30
10	1	ETHERNET SWITCH, 5-PORT INDUSTRIAL, DIN RAIL MOUNT, 10/100/1000T	AAXEON TECHNOLOGIES	LNX-500AG
11	5	ETHERNET BULKHEAD PASS THROUGH	RJ LNXX	ENSP1F5C305
12	5	ETHERNET PORT CLOSURE CAP	RJ LNXX	67-0300
13	5	COUPLING ADAPTER	ALLEN-BRADLEY	889A-N3ADPT
14	2	ASSEMBLED E-STOP STATION	ALLEN-BRADLEY	800F-1YMQ2
15	12	END BRACKET, SNAP-ON, CLIPFIX 35	PHOENIX CONTACT	3022218
16	6	MARKER, TERMINAL STRIP UBE/D	PHOENIX CONTACT	0800307
17	75	TERMINAL BLOCK, SPRING CAGE ST 2,5	PHOENIX CONTACT	3031212
18	A/R	DIN RAIL NS 35/ 7,5 PERF 1155MM 10 PCS.	PHOENIX CONTACT	1207666
19	1	POWER SUPPLY QUINT-PS-100-240AC/24DC/20	PHOENIX CONTACT	2938620
20	A/R	WIRE DUCT (2" x 4')	PANDUIT	G2X4WH6
21	A/R	2" WIRE DUCT COVER	PANDUIT	C2WH6
22	31	TERMINAL BLOCK, FUSED W/LED, ST4-HEILED24	PHOENIX CONTACT	3036547
23	31	FUSE, ELECTRONIC, 1 AMP	FERRAZ SHAWMUT	GSB-1

NOTES:

1. CABLE AND SAFETY DEVICE TO BE PROVIDED BY USER.
2. 14 FEMALE CONNECTORS WILL CONNECT PIN-9 TO PIN-10 FOR BULKHEAD SHORTING CONNECTORS.

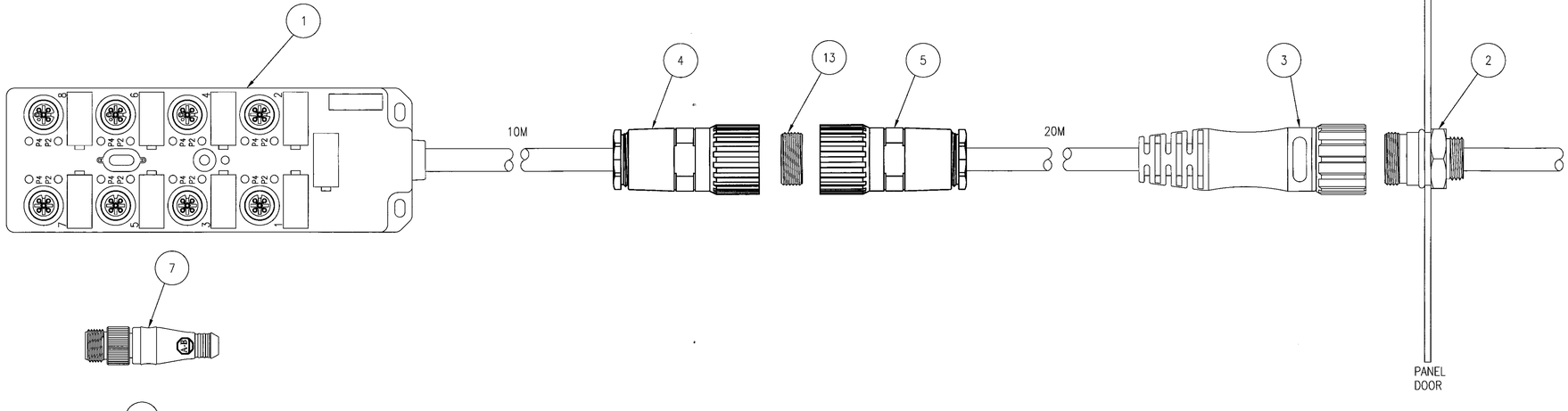

PATCH PANEL EQUIPMENT
SCALE: 1:1

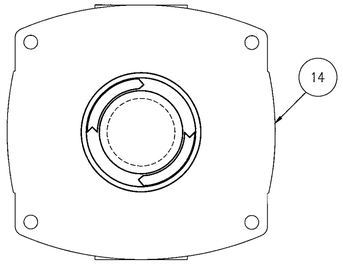

E-STOP STATION
SCALE: 1:1

WILLIAM L. CARPENTER JR.
REGISTERED ENGINEER
No. 0002919
STATE OF TENNESSEE

DEVELOPMENT ONE, INC.
1611 East Fourth Street, Suite 250
Santa Ana, California 92701
J.Bruce Camino, Architect, AIA, NCARB
(714) 689-0298
(714) 648-0197 FAX

DATE	SYM	REVISION	BY	A'PD
10/19/09		100% FINAL DESIGN		

NATIONAL AERONAUTICS AND SPACE ADMINISTRATION
DRYDEN FLIGHT RESEARCH CENTER
EDWARDS, CA

DRAWING TITLE
PCC USER INTERLOCK
PATCH PANEL LAYOUT
(SHEET 1)

PROJECT TITLE
REPAIR BUILDING 4820 FLIGHT LOADS LABORATORY
POWER CONTROL UPGRADE

APPROVALS	DATE
Chief Facilities Engineering & Asset Mgmt. Office	6-17-10
Project Manager	5-13-10
Safety Office	5/5/10
Project Requester	5-22-10
Safety Office	6-1-10
Telecom	5/26/10

DRAWN BY	M. HENNICH	DATE STRTD	09/17/08
W.O. #	95099	DATE PRNTD	04/26/10
PLOT SCALE		TRADE SH. No.	I-060-01
CAD FILE NAME			

SHEET No. 99 of 125

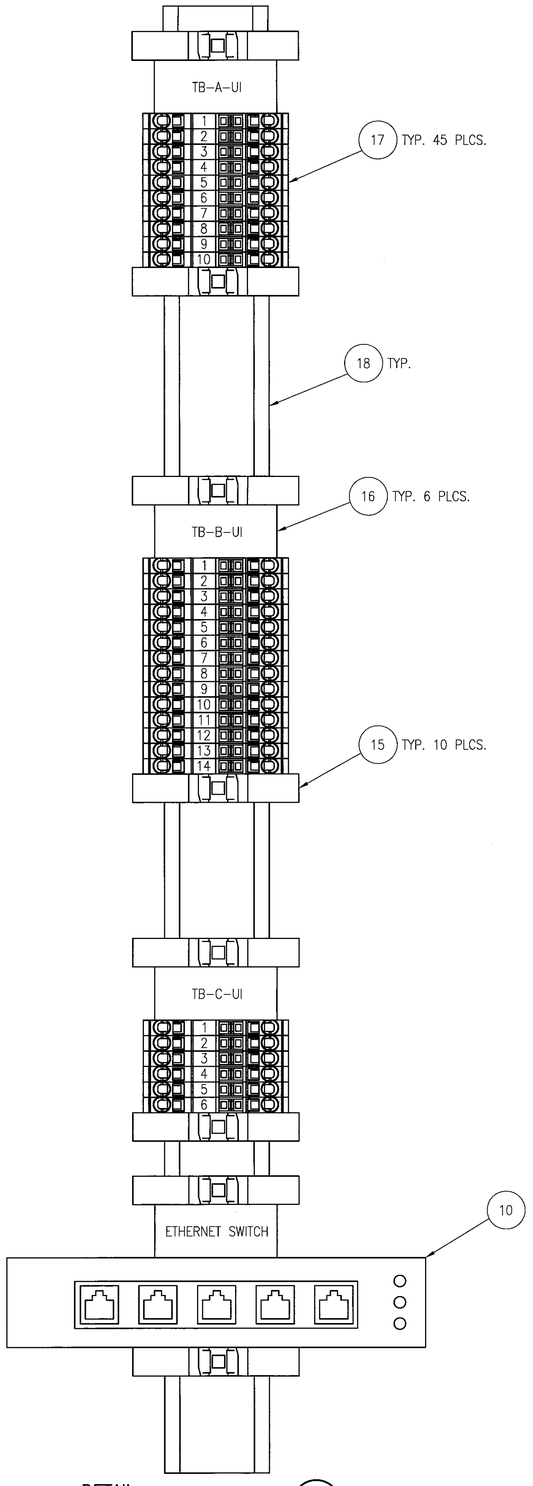

DETAIL 1
SCALE: 1:1 I-060-01

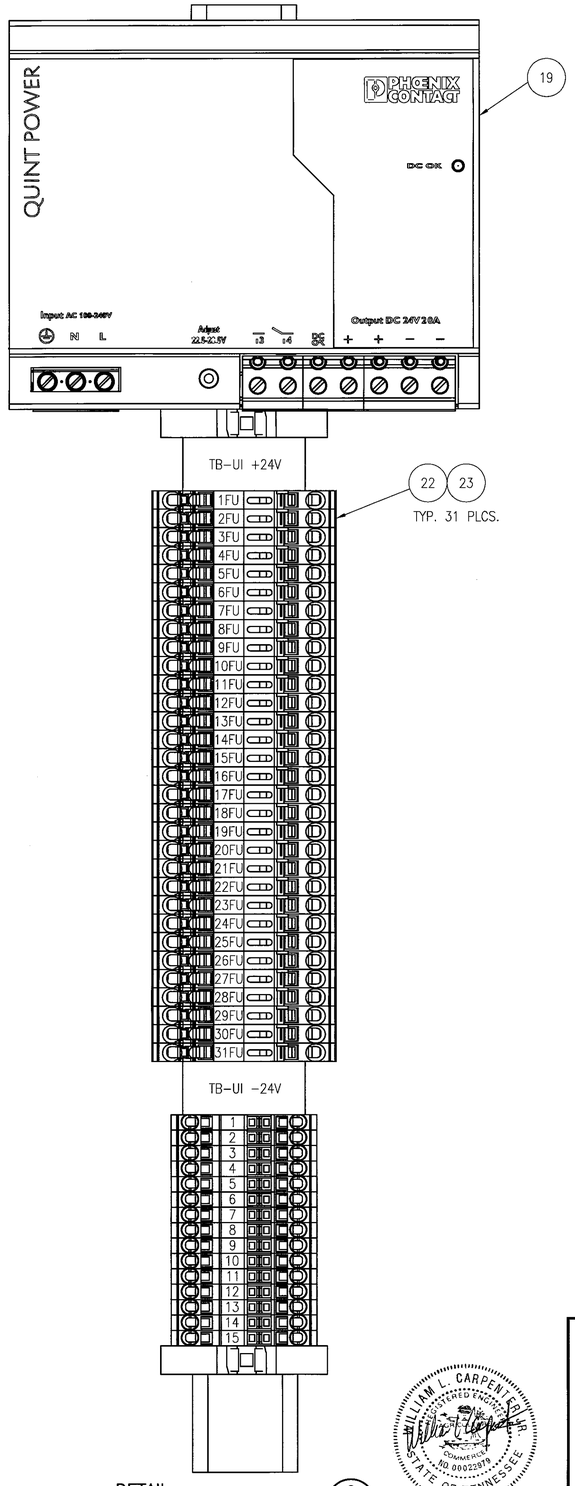

DETAIL 2
SCALE: 1:1 I-060-01

NOTES:

1. SEE DRAWING I-060-01 FOR BILL OF MATERIALS.

WILLIAM L. CARPENTER
REGISTERED ENGINEER
No. 0002269
COMMERCIAL
STATE OF TENNESSEE

DEVELOPMENT ONE, INC.
1611 East Fourth Street, Suite 250
Santa Ana, California 92701
J.Bruce Camino, Architect, AIA, NCARB
(714) 689-0298
(714) 648-0197 FAX

DATE	SYM	REVISION	BY	A'PD
10/19/09		100% FINAL DESIGN		

NATIONAL AERONAUTICS AND SPACE ADMINISTRATION
DRYDEN FLIGHT RESEARCH CENTER
EDWARDS, CA

DRAWING TITLE
PCC USER INTERLOCK
PATCH PANEL LAYOUT
(SHEET 2)

PROJECT TITLE
REPAIR BUILDING 4820 FLIGHT LOADS LABORATORY
POWER CONTROL UPGRADE

APPROVALS	DATE
Chief, Facilities Engineering & Asset Mgmt. Office	6-17-10
Project Inspector	5-13-10
Security Office	5/18/10
Project Requestor	5-22-10
Safety Office	6-1-10
Telecom	5/26/10

DRAWN BY	M. HENNIGH	DATE STRTD	09/17/08
W.O. #	95099	DATE PRNTD	04/26/10
PLOT SCALE		TRADE SH. No.	I-060-02
CAD FILE NAME			

SHEET No. 100 of 125

TYPE "A" USER INTERLOCK SUMMATIONS

TB-A-UI

CONNECTOR A1	PIN 9	061-A1-01A	BLK	1	YEL	UI-061-A1-01B	TO SHEET I-070 PCC A1 SAFETY RELAY X5-5
	PIN 10	061-A1-02A	VLT	2	BLU		TB UI +24-29
CONNECTOR A2	PIN 9	061-A2-01A	BLK	3	YEL	UI-061-A2-01B	TO SHEET I-070 PCC A2 SAFETY RELAY X5-5
	PIN 10	061-A2-02A	VLT	4			
CONNECTOR A3	PIN 9	061-A3-01A	BLK	5	YEL	UI-061-A3-01B	TO SHEET I-070 PCC A3 SAFETY RELAY X5-5
	PIN 10	061-A3-02A	VLT	6			
CONNECTOR A4	PIN 9	061-A4-01A	BLK	7	YEL	UI-061-A4-01B	TO SHEET I-070 PCC A4 SAFETY RELAY X5-5
	PIN 10	061-A4-02A	VLT	8			
CONNECTOR A5	PIN 9	061-A5-01A	BLK	9	YEL	UI-061-A5-01B	TO SHEET I-070 PCC A5 SAFETY RELAY X5-5
	PIN 10	061-A5-02A	VLT	10			

TYPE "B" USER INTERLOCK SUMMATIONS

TB-B-UI

CONNECTOR B1	PIN 9	061-B1-01A	BLK	1	YEL	UI-061-B1-01B	TO SHEET I-070 PCC B1 SAFETY RELAY X5-5
	PIN 10	061-B1-02A	VLT	2	BLU		TB UI +24-30
CONNECTOR B2	PIN 9	061-B2-01A	BLK	3	YEL	UI-061-B2-01B	TO SHEET I-070 PCC B2 SAFETY RELAY X5-5
	PIN 10	061-B2-02A	VLT	4			
CONNECTOR B3	PIN 9	061-B3-01A	BLK	5	YEL	UI-061-B3-01B	TO SHEET I-070 PCC B3 SAFETY RELAY X5-5
	PIN 10	061-B3-02A	VLT	6			
CONNECTOR B4	PIN 9	061-B4-01A	BLK	7	YEL	UI-061-B4-01B	TO SHEET I-070 PCC B4 SAFETY RELAY X5-5
	PIN 10	061-B4-02A	VLT	8			
CONNECTOR B5	PIN 9	061-B5-01A	BLK	9	YEL	UI-061-B5-01B	TO SHEET I-070 PCC B5 SAFETY RELAY X5-5
	PIN 10	061-B5-02A	VLT	10			
CONNECTOR B6	PIN 9	061-B6-01A	BLK	11	YEL	UI-061-B6-01B	TO SHEET I-070 PCC B6 SAFETY RELAY X5-5
	PIN 10	061-B6-02A	VLT	12			

TYPE "C" USER INTERLOCK SUMMATIONS

TB-C-UI

CONNECTOR C1	PIN 9	061-C1-01A	BLK	1	YEL	UI-061-C1-01B	TO SHEET I-070 PCC C1 SAFETY RELAY X5-5
	PIN 10	061-C1-02A	VLT	2	BLU		TB UI +24-31
CONNECTOR C2	PIN 9	061-C2-01A	BLK	3	YEL	UI-061-C2-01B	TO SHEET I-070 PCC C2 SAFETY RELAY X5-5
	PIN 10	061-C2-02A	VLT	4			
CONNECTOR C3	PIN 9	061-C3-01A	BLK	5	YEL	UI-061-C3-01B	TO SHEET I-070 PCC C3 SAFETY RELAY X5-5
	PIN 10	061-C3-02A	VLT	6			

TB UI +24

CONNECTOR A1 – PIN 1	061-29B	BRN	1FU
CONNECTOR A2 – PIN 1	061-29C	BRN	2FU
CONNECTOR A3 – PIN 1	061-29D	BRN	3FU
CONNECTOR A4 – PIN 1	061-29E	BRN	4FU
CONNECTOR A5 – PIN 1	061-29F	BRN	5FU
CONNECTOR B1 – PIN 1	061-29G	BRN	6FU
CONNECTOR B2 – PIN 1	061-29H	BRN	7FU
CONNECTOR B3 – PIN 1	061-29I	BRN	8FU
CONNECTOR B4 – PIN 1	061-29J	BRN	9FU
CONNECTOR B5 – PIN 1	061-29K	BRN	10FU
CONNECTOR B6 – PIN 1	061-29L	BRN	11FU
CONNECTOR C1 – PIN 1	061-29M	BRN	12FU
CONNECTOR C2 – PIN 1	061-29N	BRN	13FU
CONNECTOR C3 – PIN 1	061-29O	BRN	14FU
	UI-061-A1-29P	BLU	15FU
	UI-061-A2-29P	BLU	16FU
	UI-061-A3-29P	BLU	17FU
	UI-061-A4-29P	BLU	18FU
	UI-061-A5-29P	BLU	19FU
	UI-061-B1-29P	BLU	20FU
	UI-061-B2-29P	BLU	21FU
	UI-061-B3-29P	BLU	22FU
	UI-061-B4-29P	BLU	23FU
	UI-061-B5-29P	BLU	24FU
	UI-061-B6-29P	BLU	25FU
	UI-061-C1-29P	BLU	26FU
	UI-061-C2-29P	BLU	27FU
	UI-061-C3-29P	BLU	28FU
THIS SHEET	TBA-UI-2	BLU	29FU
	TBB-UI-2	BLU	30FU
	TBC-UI-2	BLU	31FU

061-29A — #12AWG — CB UI 20AMP

UI 24 VDC POWER SUPPLY: + + – – ; L N

BLK — L — 120VAC PP1 CIRCUIT 16 SEE DWG. E-020
WHT — N
GRN — G

#12AWG

TB UI -24

CONNECTOR A1 – PIN 2	061-30B	BLU	1
CONNECTOR A2 – PIN 2	061-30C	BLU	2
CONNECTOR A3 – PIN 2	061-30D	BLU	3
CONNECTOR A4 – PIN 2	061-30E	BLU	4
CONNECTOR A5 – PIN 2	061-30F	BLU	5
CONNECTOR B1 – PIN 2	061-30G	BLU	6
CONNECTOR B2 – PIN 2	061-30H	BLU	7
CONNECTOR B3 – PIN 2	061-30I	BLU	8
CONNECTOR B4 – PIN 2	061-30J	BLU	9
CONNECTOR B5 – PIN 2	061-30K	BLU	10
CONNECTOR B6 – PIN 2	061-30L	BLU	11
CONNECTOR C1 – PIN 2	061-30M	BLU	12
CONNECTOR C2 – PIN 2	061-30N	BLU	13
CONNECTOR C3 – PIN 2	061-30O	BLU	14
			15

WHT/BLU — 061-30A

WHT/BLU — UI-061-30R — #12AWG — TO SHEET I-091

NOTES:

1. DASHED LINES INDICATE CONDUCTORS TO BE FIELD INSTALLED AND TERMINATED.
2. UNLESS OTHERWISE NOTED ALL WIRES SHALL BE #16AWG.

(DOOR SWITCHES LOCATED IN PATCH PANEL PP-A1)	A1 DOOR SW1	UI-061-A1-29Q	A1 DOOR SW2	UI-061-A1-29R — TO SHEET I-070 PCC A1 SAFETY RELAY X5-7
(DOOR SWITCHES LOCATED IN PATCH PANEL PP-A2)	A2 DOOR SW1	UI-061-A2-29Q	A2 DOOR SW2	UI-061-A2-29R — TO SHEET I-070 PCC A2 SAFETY RELAY X5-7
(DOOR SWITCHES LOCATED IN PATCH PANEL PP-A3)	A3 DOOR SW1	UI-061-A3-29Q	A3 DOOR SW2	UI-061-A3-29R — TO SHEET I-070 PCC A3 SAFETY RELAY X5-7
(DOOR SWITCHES LOCATED IN PATCH PANEL PP-A4)	A4 DOOR SW1	UI-061-A4-29Q	A4 DOOR SW2	UI-061-A4-29R — TO SHEET I-070 PCC A4 SAFETY RELAY X5-7
(DOOR SWITCHES LOCATED IN PATCH PANEL PP-A5)	A5 DOOR SW1	UI-061-A5-29Q	A5 DOOR SW2	UI-061-A5-29R — TO SHEET I-070 PCC A5 SAFETY RELAY X5-7

TYPE "A" PATCH PANELS DOOR SAFETY SWITCHES

(DOOR SWITCHES LOCATED IN PATCH PANEL PP-B1)	B1 DOOR SW1	UI-061-B1-29Q	B1 DOOR SW2	UI-061-B1-29R — TO SHEET I-070 PCC B1 SAFETY RELAY X5-7
(DOOR SWITCHES LOCATED IN PATCH PANEL PP-B2)	B2 DOOR SW1	UI-061-B2-29Q	B2 DOOR SW2	UI-061-B2-29R — TO SHEET I-070 PCC B2 SAFETY RELAY X5-7
(DOOR SWITCHES LOCATED IN PATCH PANEL PP-B3)	B3 DOOR SW1	UI-061-B3-29Q	B3 DOOR SW2	UI-061-B3-29R — TO SHEET I-070 PCC B3 SAFETY RELAY X5-7
(DOOR SWITCHES LOCATED IN PATCH PANEL PP-B4)	B4 DOOR SW1	UI-061-B4-29Q	B4 DOOR SW2	UI-061-B4-29R — TO SHEET I-070 PCC B4 SAFETY RELAY X5-7
(DOOR SWITCHES LOCATED IN PATCH PANEL PP-B5)	B5 DOOR SW1	UI-061-B5-29Q	B5 DOOR SW2	UI-061-B5-29R — TO SHEET I-070 PCC B5 SAFETY RELAY X5-7
(DOOR SWITCHES LOCATED IN PATCH PANEL PP-B6)	B6 DOOR SW1	UI-061-B6-29Q	B6 DOOR SW2	UI-061-B6-29R — TO SHEET I-070 PCC B6 SAFETY RELAY X5-7

TYPE "B" PATCH PANELS DOOR SAFETY SWITCHES

(DOOR SWITCHES LOCATED IN PATCH PANEL PP-C1)	C1 DOOR SW1	UI-061-C1-29Q	C1 DOOR SW2	UI-061-C1-29R — TO SHEET I-070 PCC C1 SAFETY RELAY X5-7
(DOOR SWITCHES LOCATED IN PATCH PANEL PP-C2)	C2 DOOR SW1	UI-061-C2-29Q	C2 DOOR SW2	UI-061-C2-29R — TO SHEET I-070 PCC C2 SAFETY RELAY X5-7
(DOOR SWITCHES LOCATED IN PATCH PANEL PP-C3)	C3 DOOR SW1	UI-061-C3-29Q	C3 DOOR SW2	UI-061-C3-29R — TO SHEET I-070 PCC C3 SAFETY RELAY X5-7

TYPE "C" PATCH PANELS DOOR SAFETY SWITCHES

WILLIAM L. CARPENTER JR. REGISTERED ENGINEER AGENT COMMISSIONED NO. 00022979 STATE OF TENNESSEE

DEVELOPMENT ONE, INC.
1611 East Fourth Street, Suite 250
Santa Ana, California 92701
J.Bruce Camino, Architect, AIA, NCARB
(714) 689-0298
(714) 648-0197 FAX

DATE	SYM	REVISION	BY	A'PD
10/19/09		100% FINAL DESIGN		

NATIONAL AERONAUTICS AND SPACE ADMINISTRATION
DRYDEN FLIGHT RESEARCH CENTER
EDWARDS, CA

DRAWING TITLE
PCC USER INTERLOCK PATCH PANEL SCHEMATIC

PROJECT TITLE
REPAIR BUILDING 4820 FLIGHT LOADS LABORATORY POWER CONTROL UPGRADE

APPROVALS	DATE
Chief, Facilities Engineering & Asset Mgmt. Office	6-17-10
Project Manager	5-13-10
Security Office	5/25/10
Project Requestor	5-27-10
Safety Office	6-1-10
Telecom	5/26/10

DRAWN BY	M. HENNIGH	DATE STRTD	09/17/08
W.O. #	95099	DATE PRNTD	04/26/10
PLOT SCALE		TRADE SH. No.	I-061
CAD FILE NAME			

SHEET No. 101 of 125

NOTES:

1. SEE DRAWING I-060-01 FOR CORRESPONDING ITEM NUMBERS AND BILL OF MATERIALS.
2. SEE DRAWING I-061 FOR WIRE LABELS AND DESTINATIONS.

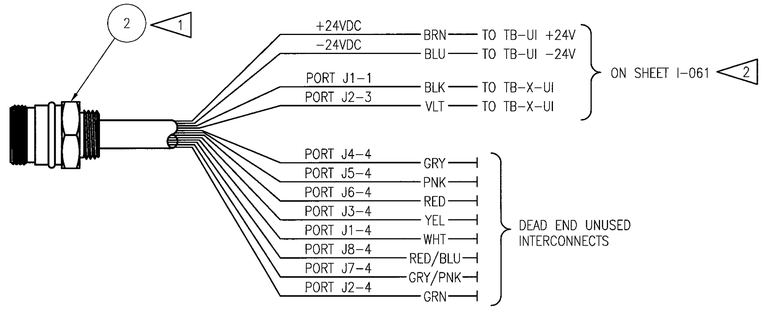

BULKHEAD CONNECTOR FLYING LEAD DETAILS
(TYPICAL OF 14 PLACES)

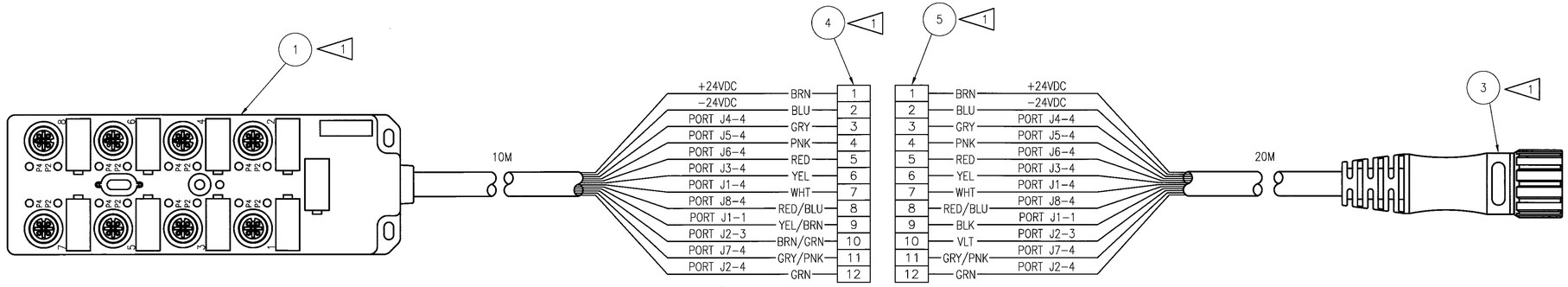

SAFETY DISTRIBUTION BOX & PATCH CORD PINOUT DETAILS
(TYPICAL OF 5 RUNS)

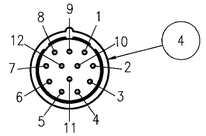

DEVELOPMENT ONE, INC.
1611 East Fourth Street, Suite 250
Santa Ana, California 92701
J.Bruce Camino, Architect, AIA, NCARB
(714) 689-0298
(714) 648-0197 FAX

WILLIAM L. CARPENTER
REGISTERED ENGINEER
No. 000022979
STATE OF TENNESSEE

DATE	SYM	REVISION	BY	A'PD
10/19/09		100% FINAL DESIGN		

NATIONAL AERONAUTICS AND SPACE ADMINISTRATION
DRYDEN FLIGHT RESEARCH CENTER
EDWARDS, CA

DRAWING TITLE
PCC USER INTERLOCK
PATCH PANEL CABLE
PIN-OUT DETAILS

PROJECT TITLE
REPAIR BUILDING 4820 FLIGHT LOADS LABORATORY
POWER CONTROL UPGRADE

APPROVALS	DATE
Chief, Facilities Engineering & Asset Mgmt. Office	6-17-10
Project Mgr.	5.13.10
Security Office	5/25/10
Project Requestor	5-22-10
Safety Manager	6-1-10
Telecom	5/26/10

DRAWN BY	M. HENNIGH	DATE SIRTD	09/17/08
W.O. #	95099	DATE PRNTD	04/26/10
PLOT SCALE		TRADE SH. No.	I-062
CAD FILE NAME			

SHEET No. 102 of 125

NOTES:

1. PCC A5 AND C3 WILL CONTAIN ONLY 12 CHANNELS (0–11).
2. ALL I/O SIGNAL WIRING SHALL BE BELDEN 8760 (#18AWG SHIELDED, TWISTED PAIR).
3. ALL 24VDC POWER WIRING SHALL BE #16AWG.
4. PCC B1 WILL CONTAIN ONLY 15 CHANNELS (0–14).

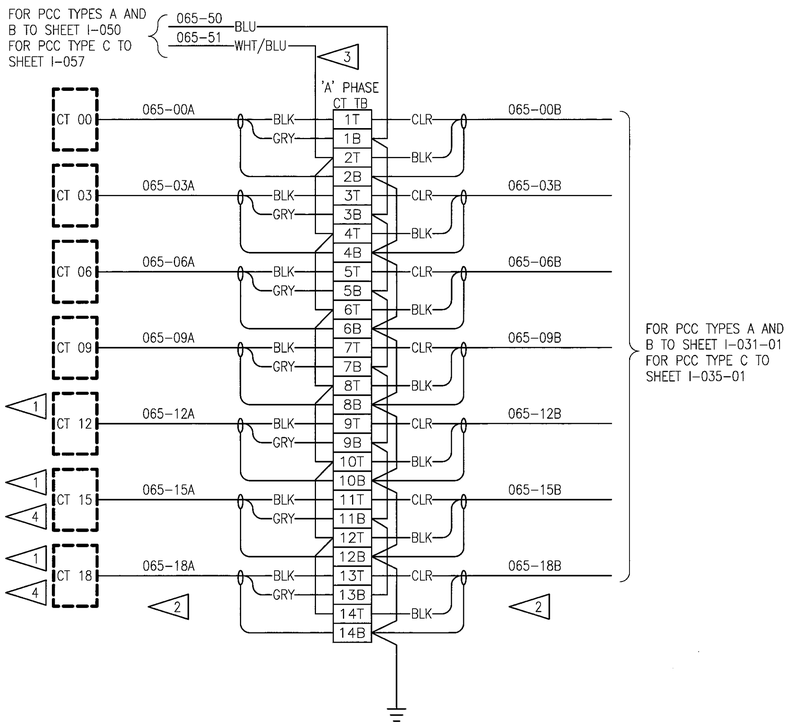

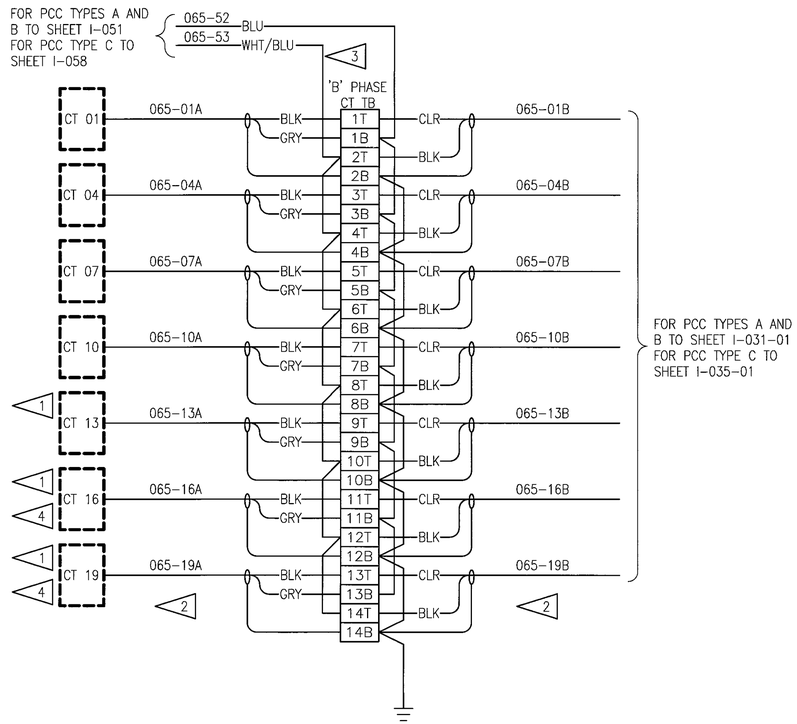

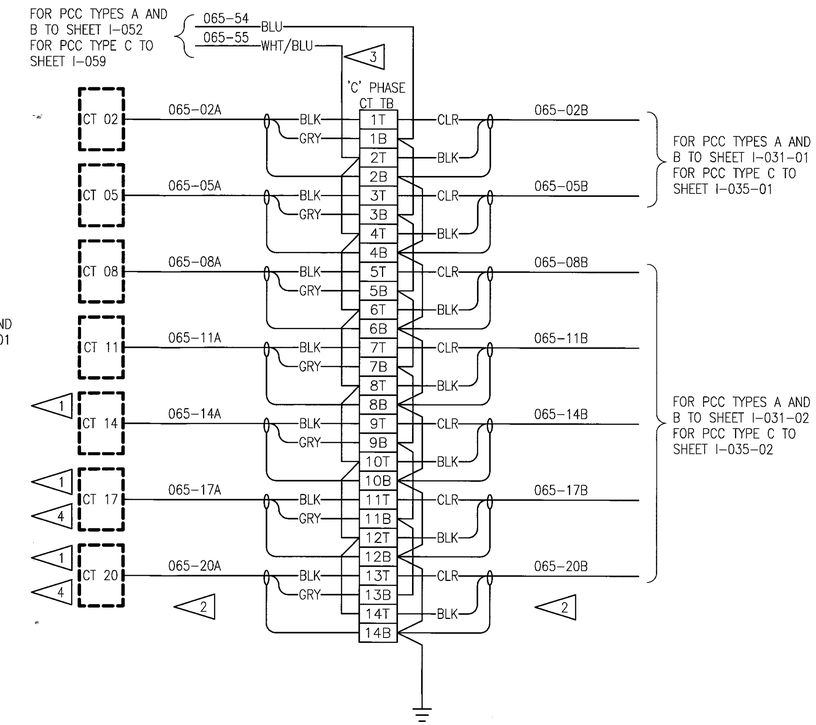

SEE SHEET I–102 FOR PCC TYPE A PANEL LAYOUT

SEE SHEET I–103 FOR PCC TYPE B PANEL LAYOUT

SEE SHEET I–104 FOR PCC TYPE C PANEL LAYOUT

DEVELOPMENT ONE, INC.
1611 East Fourth Street, Suite 250
Santa Ana, California 92701
J.Bruce Camino, Architect, AIA, NCARB
(714) 689-0298
(714) 648-0197 FAX

DATE	SYM	REVISION	BY	A'PD
10/19/09		100% FINAL DESIGN		

NATIONAL AERONAUTICS AND SPACE ADMINISTRATION
DRYDEN FLIGHT RESEARCH CENTER
EDWARDS, CA

DRAWING TITLE
POWER CONTROL CABINETS
CURRENT TRANSFORMERS
WIRING – TYPICAL

PROJECT TITLE
REPAIR BUILDING 4820 FLIGHT LOADS LABORATORY
POWER CONTROL UPGRADE

APPROVALS	DATE
Chief, Facilities Engineering & Asset Mgmt. Office	6-17-10
Project Manager	5.13.10
Safety Office	5/25/10
Project Requestor	5-22-10
Safety Office	6-1-10
Telecom	5/26/10

DRAWN BY	M. HENNIGH	DATE STRTD	09/17/08
W.O. #	95099	DATE PRNTD	04/26/10
PLOT SCALE		TRADE SH. No.	I–065
CAD FILE NAME			SHEET No. 103 of 125

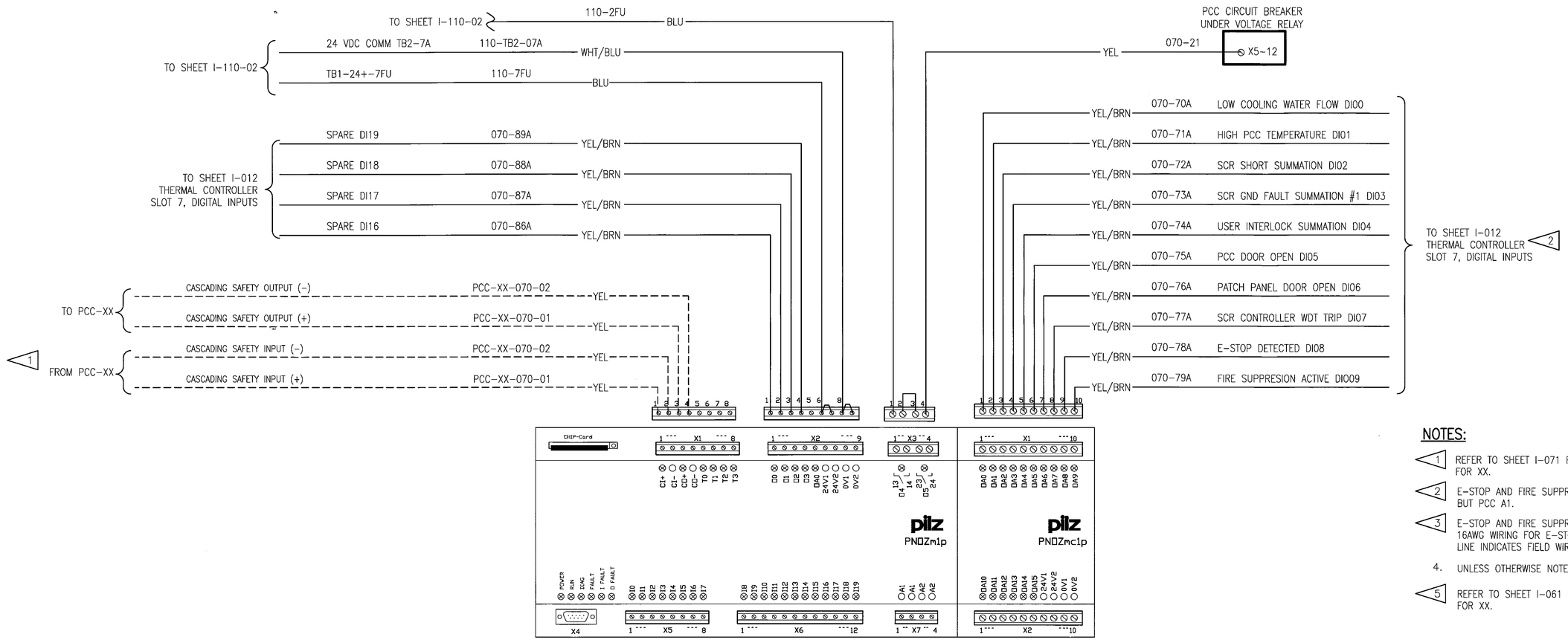

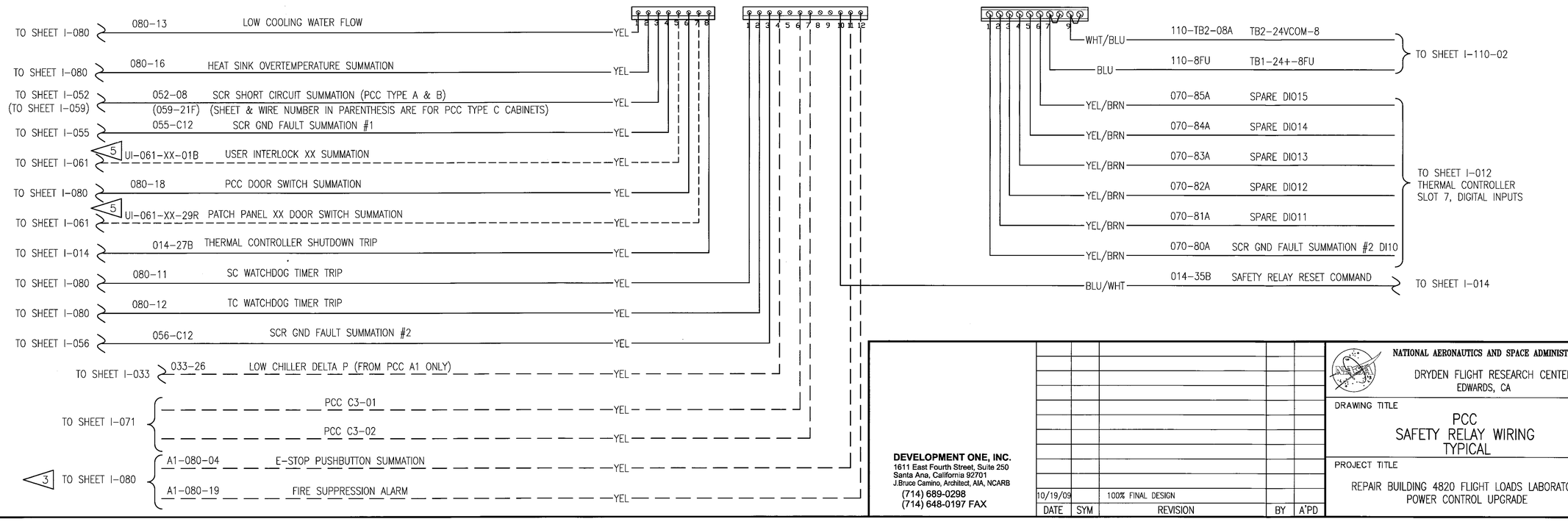

NOTES:

1. REFER TO SHEET I-071 FOR CABLE SCHEDULE AND DEFINITION FOR XX.
2. E-STOP AND FIRE SUPPRESSION INPUTS ARE SPARES IN ALL BUT PCC A1.
3. E-STOP AND FIRE SUPPRESSION WIRED IN PCC A1 ONLY. USE 16AWG WIRING FOR E-STOP AND FIRE SUPPRESSION. DASHED LINE INDICATES FIELD WIRING.
4. UNLESS OTHERWISE NOTED ALL WIRING SHALL BE #16AWG.
5. REFER TO SHEET I-061 FOR CABLE SCHEDULE & DEFINITION FOR XX.

WILLIAM L. CARPENTER
REGISTERED ENGINEER
No. 0002397
COMMERCIAL
STATE OF TENNESSEE

DEVELOPMENT ONE, INC.
1611 East Fourth Street, Suite 250
Santa Ana, California 92701
J.Bruce Camino, Architect, AIA, NCARB
(714) 689-0298
(714) 648-0197 FAX

DATE	SYM	REVISION	BY	A'PD
10/19/09		100% FINAL DESIGN		

NATIONAL AERONAUTICS AND SPACE ADMINISTRATION
DRYDEN FLIGHT RESEARCH CENTER
EDWARDS, CA

DRAWING TITLE
PCC
SAFETY RELAY WIRING
TYPICAL

PROJECT TITLE
REPAIR BUILDING 4820 FLIGHT LOADS LABORATORY
POWER CONTROL UPGRADE

APPROVALS	DATE
Chief, Facilities Engineering & Asset Mgmt. Office	6/7/10
Project Manager	5/13/10
Safety Office	5/25/10
Project Requestor	5/22/10
Safety Office	6-1-10
Telecom	5/26/10

DRAWN BY	M. HENNIGH	DATE STRTD	09/17/08
W.O. #	95099	DATE PRNTD	04/26/10
PLOT SCALE		TRADE SKL No.	
CAD FILE NAME			I-070

SHEET No. 104 of 125

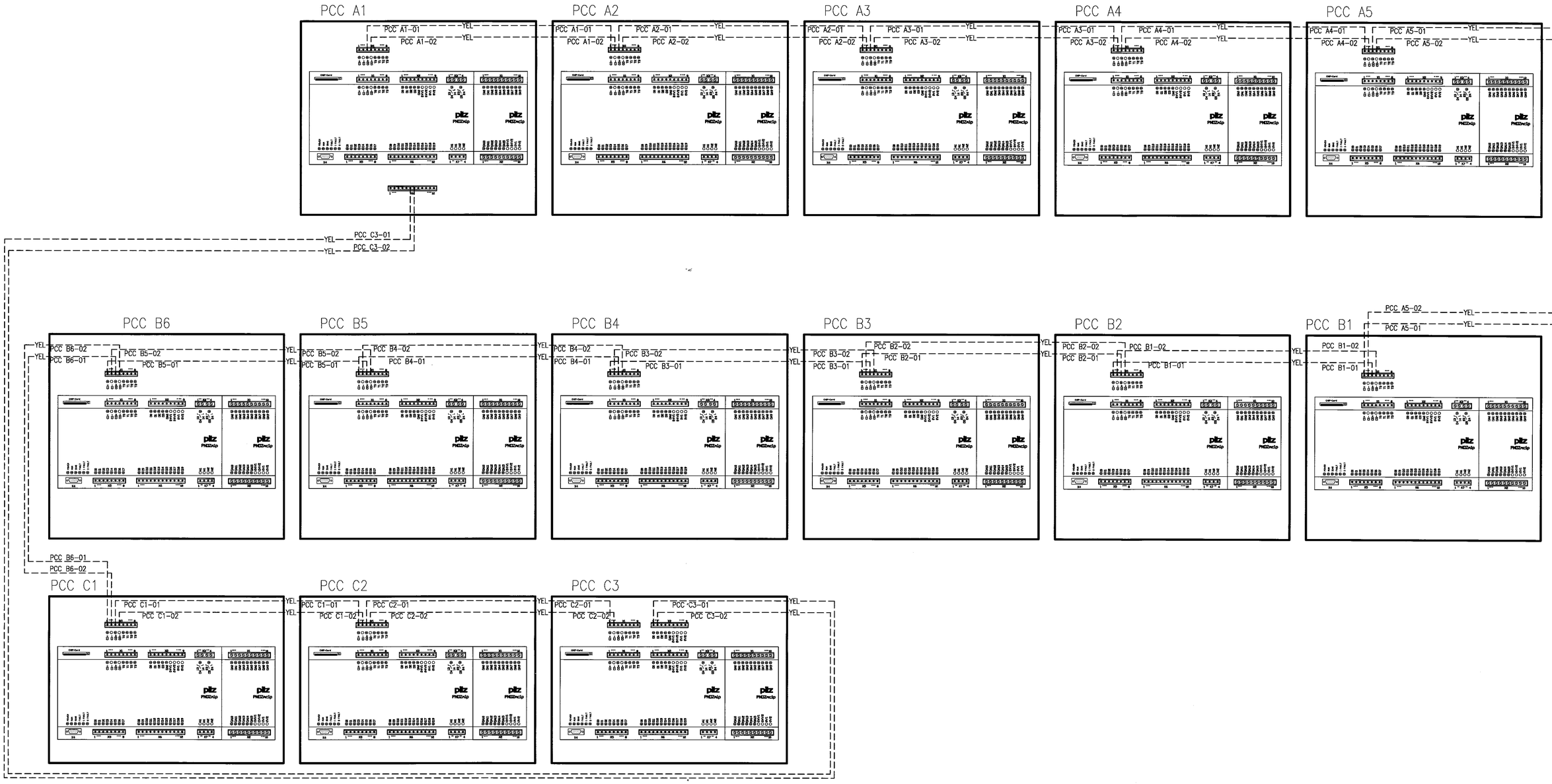

DEVELOPMENT ONE, INC.
1611 East Fourth Street, Suite 250
Santa Ana, California 92701
J.Bruce Camino, Architect, AIA, NCARB
(714) 689-0298
(714) 648-0197 FAX

WILLIAM L. CARPENTER JR.
REGISTERED ENGINEER
No. 0022978
STATE OF TENNESSEE

DATE	SYM	REVISION	BY	A'PD
10/19/09		100% FINAL DESIGN		

NATIONAL AERONAUTICS AND SPACE ADMINISTRATION
DRYDEN FLIGHT RESEARCH CENTER
EDWARDS, CA

DRAWING TITLE
POWER CONTROL CABINET
SAFETY RELAY
INTER-CONNECTIONS NETWORK

PROJECT TITLE
REPAIR BUILDING 4820 FLIGHT LOADS LABORATORY
POWER CONTROL UPGRADE

APPROVALS	DATE
Chief, Facilities Engineering & Asset Mgmt. Office	6-17-10
Project Manager	5-13-10
Security Office	5/25/10
Project Requestor	5-22-10
Safety Office	6-1-10
Telecom	5/24/10

DRAWN BY	M. HENNIGH	DATE STRTD	09/17/08
W.O. #	95099	DATE PRNTD	04/26/10
PLOT SCALE		TRADE SH. No.	I-071
CAD FILE NAME			

SHEET No. 105 of 125

NOTES:

1. DASHED LINES INDICATE CONDUCTORS TO BE FIELD INSTALLED AND TERMINATED.
2. UNLESS OTHERWISE NOTED ALL WIRES SHALL BE #16AWG.

3 SEE DRAWING I-014 FOR CONTROL RELAY DO-21.

4 SEE DRAWING I-033 FOR CONTROL RELAY SC-DO8.

5 SUPPLIED BY OTHERS, LOCATION TBD.

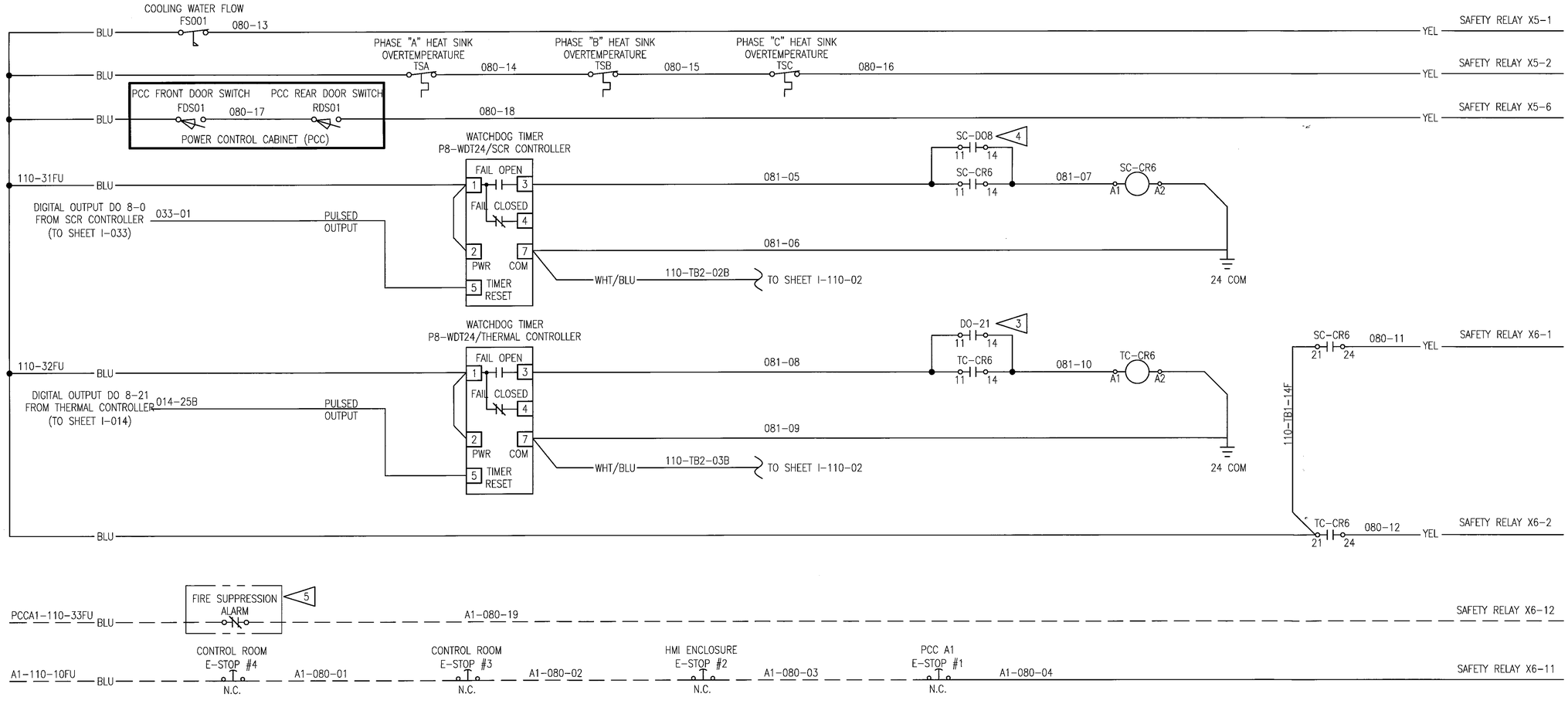

WILLIAM L. CARPENTER, JR. REGISTERED ENGINEER No. 0002379 STATE OF TENNESSEE

DEVELOPMENT ONE, INC.
1611 East Fourth Street, Suite 250
Santa Ana, California 92701
J.Bruce Camino, Architect, AIA, NCARB
(714) 689-0298
(714) 648-0197 FAX

DATE	SYM	REVISION	BY	A'PD
10/19/09		100% FINAL DESIGN		

NATIONAL AERONAUTICS AND SPACE ADMINISTRATION
DRYDEN FLIGHT RESEARCH CENTER
EDWARDS, CA

DRAWING TITLE
INTERLOCK LOGIC DIAGRAM

PROJECT TITLE
REPAIR BUILDING 4820 FLIGHT LOADS LABORATORY POWER CONTROL UPGRADE

APPROVALS	DATE
Chief Facilities Engineering & Asset Mgmt. Office	6-17-10
Project Manager	5-13-10
Security Office	5/25/10
Project Requestor	5-22-10
Safety Office	6-4-10
Telecom	5/26/10

DRAWN BY	M. HENNIGH	DATE STRTD	09/17/08
W.O. #	95099	DATE PRNTD	04/26/10
PLOT SCALE		TRADE Sht. No.	I-080
CAD FILE NAME			SHEET No. 106 of 125

	PCC–A1 TYPE A 200 AMP ZERO FIRED 21 CHANNELS	PCC–A2 TYPE A 200 AMP ZERO FIRED 21 CHANNELS	PCC–A3 TYPE A 200 AMP ZERO FIRED 21 CHANNELS	PCC–A4 TYPE A 200 AMP ZERO FIRED 21 CHANNELS	PCC–A5 TYPE A 200 AMP ZERO FIRED 12 CHANNELS	PCC–B1 TYPE B 100 AMP ZERO FIRED 15 CHANNELS	PCC–B2 TYPE A 100 AMP ZERO FIRED 21 CHANNELS	PCC–B3 TYPE B 100 AMP ZERO FIRED 21 CHANNELS	PCC–B4 TYPE B 100 AMP ZERO FIRED 21 CHANNELS	PCC–B5 TYPE B 100 AMP ZERO FIRED 21 CHANNELS	PCC–B6 TYPE B 100 AMP ZERO FIRED 21 CHANNELS	PCC–C1 TYPE C 100 AMP PHASE CONTROL 18 CHANNELS	PCC–C2 TYPE C 100 AMP PHASE CONTROL 18 CHANNELS	PCC–C3 TYPE C 100 AMP PHASE CONTROL 12 CHANNELS	
1 E–STOP PUSHBUTTON	INTERLOCK SUMMATION FROM PCC C3	INTERLOCK SUMMATION FROM PCC A1	INTERLOCK SUMMATION FROM PCC A2	INTERLOCK SUMMATION FROM PCC A3	INTERLOCK SUMMATION FROM PCC A4	INTERLOCK SUMMATION FROM PCC A5	INTERLOCK SUMMATION FROM PCC B1	INTERLOCK SUMMATION FROM PCC B2	INTERLOCK SUMMATION FROM PCC B3	INTERLOCK SUMMATION FROM PCC–4 TYPE B	INTERLOCK SUMMATION FROM PCC–5 TYPE B	INTERLOCK SUMMATION FROM PCC–6 TYPE B	INTERLOCK SUMMATION FROM PCC–1 TYPE C	INTERLOCK SUMMATION FROM PCC–2 TYPE C	1 E–STOP PUSHBUTTON
	FLOW SWITCH RELAY CONTACT	FLOW SWITCH RELAY CONTACT	FLOW SWITCH RELAY CONTACT	FLOW SWITCH RELAY CONTACT	FLOW SWITCH RELAY CONTACT	FLOW SWITCH RELAY CONTACT	FLOW SWITCH RELAY CONTACT	FLOW SWITCH RELAY CONTACT	FLOW SWITCH RELAY CONTACT	FLOW SWITCH RELAY CONTACT	FLOW SWITCH RELAY CONTACT	FLOW SWITCH RELAY CONTACT	FLOW SWITCH RELAY CONTACT	FLOW SWITCH RELAY CONTACT	
	FRONT DOOR SWITCH	FRONT DOOR SWITCH	FRONT DOOR SWITCH	FRONT DOOR SWITCH	FRONT DOOR SWITCH	FRONT DOOR SWITCH	FRONT DOOR SWITCH	FRONT DOOR SWITCH	FRONT DOOR SWITCH	FRONT DOOR SWITCH	FRONT DOOR SWITCH	FRONT DOOR SWITCH	FRONT DOOR SWITCH	FRONT DOOR SWITCH	
	REAR DOOR SWITCH	REAR DOOR SWITCH	REAR DOOR SWITCH	REAR DOOR SWITCH	REAR DOOR SWITCH	REAR DOOR SWITCH	REAR DOOR SWITCH	REAR DOOR SWITCH	REAR DOOR SWITCH	REAR DOOR SWITCH	REAR DOOR SWITCH	REAR DOOR SWITCH	REAR DOOR SWITCH	REAR DOOR SWITCH	
	THERMOSTAT RELAY CONTACT	THERMOSTAT RELAY CONTACT	THERMOSTAT RELAY CONTACT	THERMOSTAT RELAY CONTACT	THERMOSTAT RELAY CONTACT	THERMOSTAT RELAY CONTACT	THERMOSTAT RELAY CONTACT	THERMOSTAT RELAY CONTACT	THERMOSTAT RELAY CONTACT	THERMOSTAT RELAY CONTACT	THERMOSTAT RELAY CONTACT	THERMOSTAT RELAY CONTACT	THERMOSTAT RELAY CONTACT	THERMOSTAT RELAY CONTACT	
	USER INTERLOCK RELAY CONTACT	USER INTERLOCK RELAY CONTACT	USER INTERLOCK RELAY CONTACT	USER INTERLOCK RELAY CONTACT	USER INTERLOCK RELAY CONTACT	USER INTERLOCK RELAY CONTACT	USER INTERLOCK RELAY CONTACT	USER INTERLOCK RELAY CONTACT	USER INTERLOCK RELAY CONTACT	USER INTERLOCK RELAY CONTACT	USER INTERLOCK RELAY CONTACT	USER INTERLOCK RELAY CONTACT	USER INTERLOCK RELAY CONTACT	USER INTERLOCK RELAY CONTACT	
	SCR SHORT	SCR SHORT	SCR SHORT	SCR SHORT	SCR SHORT	SCR SHORT	SCR SHORT	SCR SHORT	SCR SHORT	SCR SHORT	SCR SHORT	SCR SHORT	SCR SHORT	SCR SHORT	
CHILLER DELTA P TRANSDUCER	GROUND FAULT	GROUND FAULT	GROUND FAULT	GROUND FAULT	GROUND FAULT	GROUND FAULT	GROUND FAULT	GROUND FAULT	GROUND FAULT	GROUND FAULT	GROUND FAULT	GROUND FAULT	GROUND FAULT	GROUND FAULT	
E–STOP PUSHBUTTONS	SCR PLC WATCHDOG TIMER RELAY	SCR PLC WATCHDOG TIMER RELAY	SCR PLC WATCHDOG TIMER RELAY	SCR PLC WATCHDOG TIMER RELAY	SCR PLC WATCHDOG TIMER RELAY	SCR PLC WATCHDOG TIMER RELAY	SCR PLC WATCHDOG TIMER RELAY	SCR PLC WATCHDOG TIMER RELAY	SCR PLC WATCHDOG TIMER RELAY	SCR PLC WATCHDOG TIMER RELAY	SCR PLC WATCHDOG TIMER RELAY	SCR PLC WATCHDOG TIMER RELAY	SCR PLC WATCHDOG TIMER RELAY	SCR PLC WATCHDOG TIMER RELAY	
FIRE SUPPRESION SIGNAL	THERMAL CONTROLLER WATCHDOG TIMER RELAY	THERMAL CONTROLLER WATCHDOG TIMER RELAY	THERMAL CONTROLLER WATCHDOG TIMER RELAY	THERMAL CONTROLLER WATCHDOG TIMER RELAY	THERMAL CONTROLLER WATCHDOG TIMER RELAY	THERMAL CONTROLLER WATCHDOG TIMER RELAY	THERMAL CONTROLLER WATCHDOG TIMER RELAY	THERMAL CONTROLLER WATCHDOG TIMER RELAY	THERMAL CONTROLLER WATCHDOG TIMER RELAY	THERMAL CONTROLLER WATCHDOG TIMER RELAY	THERMAL CONTROLLER WATCHDOG TIMER RELAY	THERMAL CONTROLLER WATCHDOG TIMER RELAY	THERMAL CONTROLLER WATCHDOG TIMER RELAY	THERMAL CONTROLLER WATCHDOG TIMER RELAY	

MEZZANINE

TEST FLOOR (BELOW MEZZANINE)

USER INTERLOCK PATCH PANEL	PATCH PANEL A1 21 CHANNELS	PATCH PANEL A2 21 CHANNELS	PATCH PANEL A3 21 CHANNELS	PATCH PANEL A4 21 CHANNELS	PATCH PANEL A5 12 CHANNELS	PATCH PANEL B1 15 CHANNELS	PATCH PANEL B2 21 CHANNELS	PATCH PANEL B3 21 CHANNELS	PATCH PANEL B4 21 CHANNELS	PATCH PANEL B5 21 CHANNELS	PATCH PANEL B6 21 CHANNELS	PATCH PANEL C1 18 CHANNELS	PATCH PANEL C2 18 CHANNELS	PATCH PANEL C3 12 CHANNELS
FROM 0 TO 40 USER DEFINED INTERLOCKS, INCLUDING ADDITIONAL E–STOP PUSHBUTTONS	FRONT DOOR SWITCH	FRONT DOOR SWITCH	FRONT DOOR SWITCH	FRONT DOOR SWITCH	FRONT DOOR SWITCH	FRONT DOOR SWITCH	FRONT DOOR SWITCH	FRONT DOOR SWITCH	FRONT DOOR SWITCH	FRONT DOOR SWITCH	FRONT DOOR SWITCH	FRONT DOOR SWITCH	FRONT DOOR SWITCH	FRONT DOOR SWITCH
	REAR DOOR SWITCH	REAR DOOR SWITCH	REAR DOOR SWITCH	REAR DOOR SWITCH	REAR DOOR SWITCH	REAR DOOR SWITCH	REAR DOOR SWITCH	REAR DOOR SWITCH	REAR DOOR SWITCH	REAR DOOR SWITCH	REAR DOOR SWITCH	REAR DOOR SWITCH	REAR DOOR SWITCH	REAR DOOR SWITCH

TEST FLOOR (BELOW MEZZANINE)

CONTROL ROOM

1 E–STOP PUSHBUTTON

1 E–STOP PUSHBUTTON

WILLIAM L. CARPENTER REGISTERED ENGINEER COMMERCE NO. 0002297 STATE OF TENNESSEE

DEVELOPMENT ONE, INC.
1611 East Fourth Street, Suite 250
Santa Ana, California 92701
J.Bruce Camino, Architect, AIA, NCARB
(714) 689-0298
(714) 648-0197 FAX

DATE	SYM	REVISION	BY	A'PD
10/19/09		100% FINAL DESIGN		

NATIONAL AERONAUTICS AND SPACE ADMINISTRATION

DRYDEN FLIGHT RESEARCH CENTER
EDWARDS, CA

DRAWING TITLE

PCC
INTERLOCK DEFINITIONS
AND LOCATIONS

PROJECT TITLE

REPAIR BUILDING 4820 FLIGHT LOADS LABORATORY
POWER CONTROL UPGRADE

APPROVALS	DATE
Chief, Facilities Engineering & Asset Mgmt. Office	6-17-10
Project Manager	5.13.10
Security Office	5/25/10
Project Engineer	5-22-10
Safety Office	6-1-10
Telecom	5/26/10

DRAWN BY	M. HENNIGH	DATE STRTD	09/17/08
W.O. #	95099	DATE PRNTD	04/26/10
PLOT SCALE		TRADE SH. No.	I–083
CAD FILE NAME			

SHEET No. 107 of 125

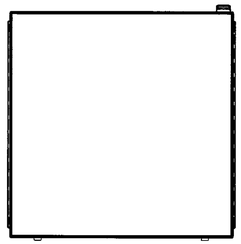

TOP VIEW
SCALE: 1:8

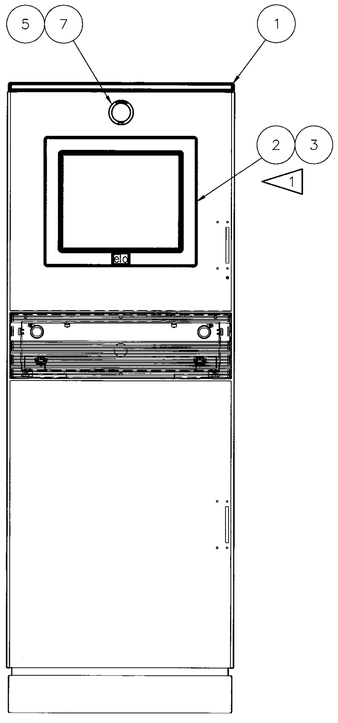

FRONT VIEW
SCALE: 1:8

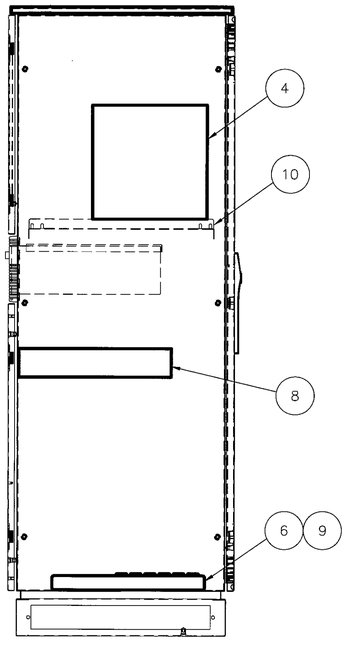

SIDE VIEW
SCALE: 1:8

BILL OF MATERIAL				
ITEM	QTY	DESCRIPTION	MANUFACTURER	PART NUMBER
1	1	PROLINE PC MODULE ENCLOSURE (66.45x23.94x23.58)	HOFFMAN	PPC-1666 & PDST86PC
2	1	1797L-17" TOUCH SCREEN W/ACCUTOUCH	ELO	E490230
3	1	FRONT MOUNT BEZEL AND HARDWARE FOR ELO 1797L	ELO	E860319
4	1	OPTIPLEX 755 ULTRA SMALL FORM FACTOR: INTEL®CORE 2 DUO PROCESSOR	DELL	E6550, NO MONITOR
5	1	2-POSITION PUSH, PULL/TWIST EMERGENCY STOP	ALLEN BRADLEY	800T-FXTA
6	1	POWER DISTRIBUTIION UNIT (POWER STRIP)	HOFFMAN	DP1N160620S
7	1	E-STOP LEGEND PLATE	ALLEN BRADLEY	800T-X646EM
8	1	SUPERSTACK 3 SWITCH 4400 48-PORT	3COM	3C17204US
9	1	RACK MOUNT PDU BRACKET FOR ITEM 6	HOFFMAN	A19PSMB
10	1	FRAME SHELF	HOFFMAN	PFSH66

NOTES:

1. REFER TO ELO DOCUMENT MS500785_F.PDF FOR ITEM 2 PANEL CUT-OUT AND MOUNTING DETAILS.

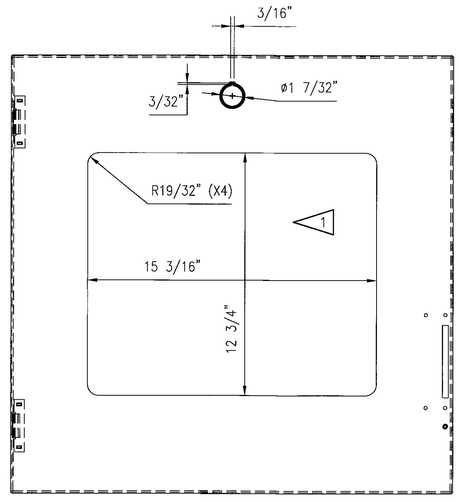

CUT-OUT DETAIL FOR ELO PANEL
SCALE: 1:4

WILLIAM L. CARPENTER JR.
REGISTERED ENGINEER
COMMERCIAL
NO. 00022979
STATE OF TENNESSEE

DEVELOPMENT ONE, INC.
1611 East Fourth Street, Suite 250
Santa Ana, California 92701
J.Bruce Camino, Architect, AIA, NCARB
(714) 689-0298
(714) 648-0197 FAX

DATE	SYM	REVISION	BY	A'PD
10/19/09		100% FINAL DESIGN		

NATIONAL AERONAUTICS AND SPACE ADMINISTRATION
DRYDEN FLIGHT RESEARCH CENTER
EDWARDS, CA

DRAWING TITLE
HMI TOUCH SCREEN
ENCLOSURE FABRICATION
AND LAYOUT

PROJECT TITLE
REPAIR BUILDING 4820 FLIGHT LOADS LABORATORY
POWER CONTROL UPGRADE

APPROVALS	DATE
Chief Facilities Engineering & Asset Mgmt. Office	6-17-10
Project Engineer	5.13.10
Security Office	5/25/10
Project Engineer	5-22-10
Safety Office	6-1-10
Telecom	5/26/10

DRAWN BY	M. HENNIGH	DATE STRTD	09/17/08
W.O. #	95099	DATE PRNTD	04/26/10
PLOT SCALE		TRADE SH. No.	I-090
CAD FILE NAME			

SHEET No. 108 of 125

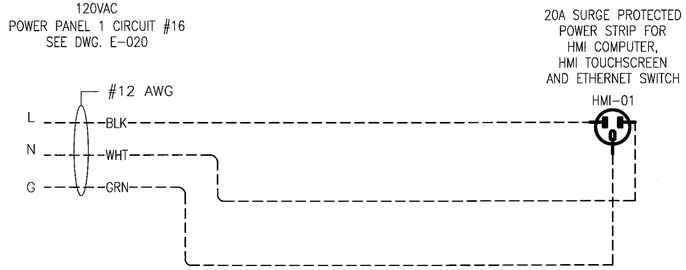

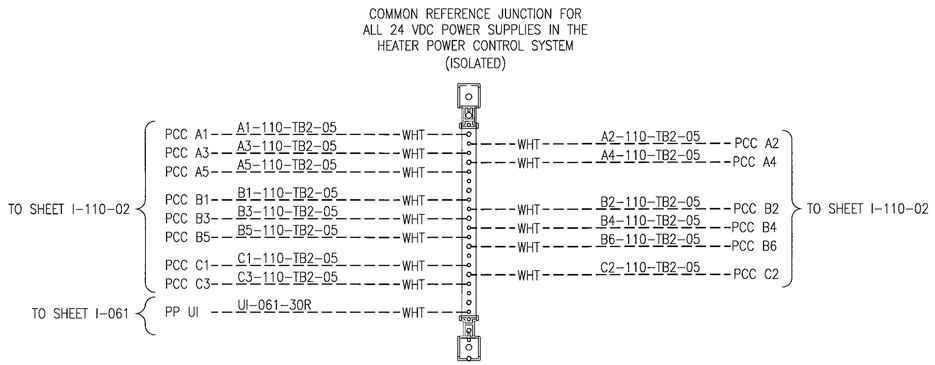

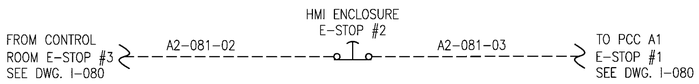

NOTES:

1. DASHED LINES INDICATE CONDUCTORS TO BE FIELD INSTALLED AND TERMINATED.

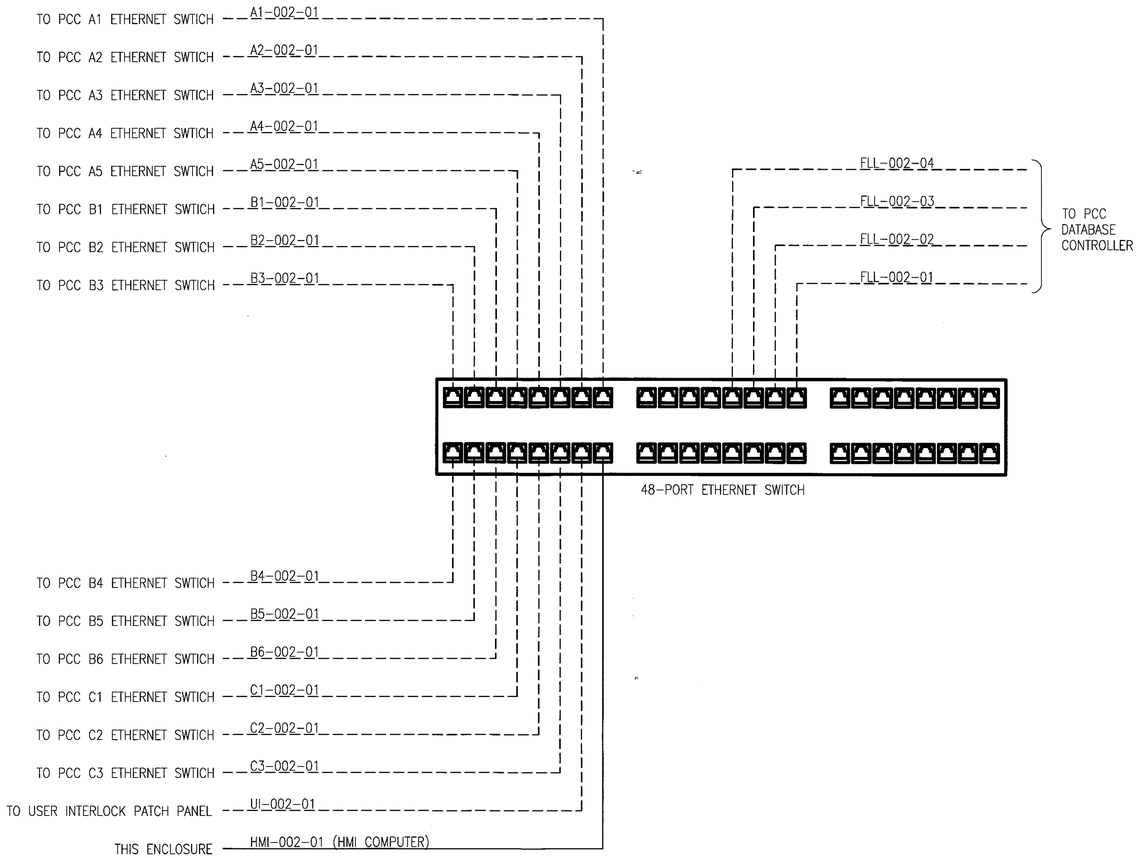

DEVELOPMENT ONE, INC.
1611 East Fourth Street, Suite 250
Santa Ana, California 92701
J.Bruce Camino, Architect, AIA, NCARB
(714) 689-0298
(714) 648-0197 FAX

DATE	SYM	REVISION	BY	A'PD
10/19/09		100% FINAL DESIGN		

NATIONAL AERONAUTICS AND SPACE ADMINISTRATION
DRYDEN FLIGHT RESEARCH CENTER
EDWARDS, CA

DRAWING TITLE
HMI ENCLOSURE
CONNECTION DETAILS

PROJECT TITLE
REPAIR BUILDING 4820 FLIGHT LOADS LABORATORY
POWER CONTROL UPGRADE

APPROVALS	DATE
Chief-Facilities Engineering & Asset Mgmt. Office	6-17-10
Project Manager	5-12-10
Security Office	5/25/10
Project Requestor	5-22-10
Safety Office	6-7-10
Telecom	5/26/10

DRAWN BY	M. HENNIGH	DATE STRTD	09/17/08
W.O. #	95099	DATE PRNTD	04/26/10
PLOT SCALE		TRADE SH. No.	I-091
CAD FILE NAME			SHEET No. 109 of 125

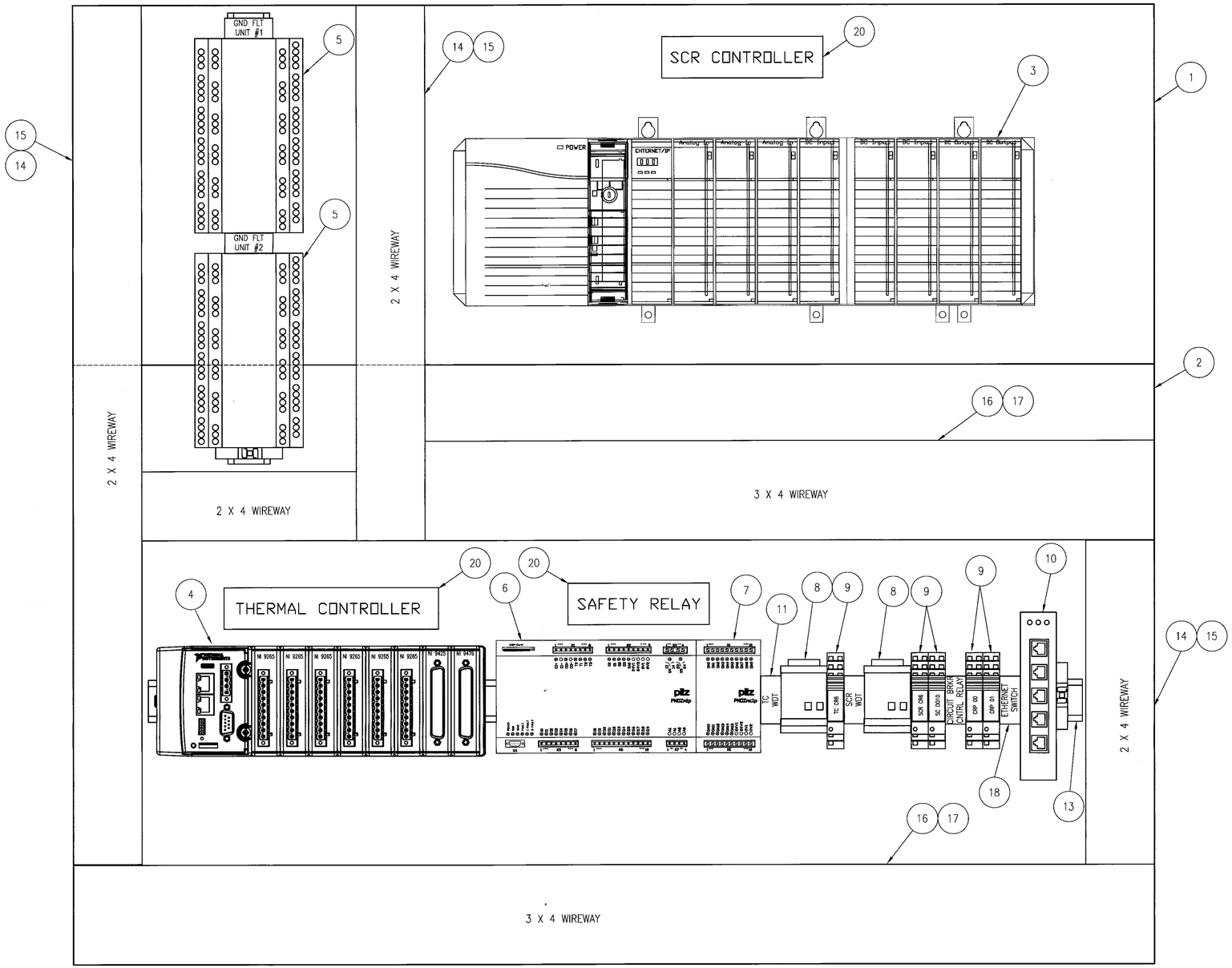

PANEL LAYOUT
SCALE: 1:2

BILL OF MATERIALS

ITEM	QTY	DESCRIPTION	MANUFACTURER	PART NUMBER
1	14	PANEL, 900 mm x 300 mm	RITTAL	TS 8614.050
2	14	PANEL, 900 mm x 500 mm	RITTAL	TS 8614.060
3	14	SCR CONTROLLER	ALLEN-BRADLEY	SEE 1-030 FOR BOM
4	14	THERMAL CONTROLLER	NATIONAL INSTRUMENTS	SEE 1-010 FOR BOM
5	28	RESIDUAL CURRENT EVALUATOR, GROUND FAULT UNIT	BENDER	RCMS490-D2
6	14	SAFETY RELAY	PILZ	PNOZM1P
7	14	SAFETY RELAY OUTPUT MODULE, 16 CHANNEL	PILZ	PNOZMC1P
8	28	WATCHDOG TIMER RELAY	BRENTEK	P8-WDT24/PLC-ISO-INI-M75-5
9	56	CONTROL RELAY PLC-RSP-24DC/21-21AU	PHOENIX CONTACT	2912578
10	14	ETHERNET SWITCH, 5-PORT INDUSTRIAL, DIN RAIL MOUNT, 10/100/1000T	AAXEON TECHNOLOGIES	LANOLINX LNX-500AG
11	112	MARKER, TERMINAL STRIP UBE/D	PHOENIX CONTACT	800307
12	112	END BARRIER FOR ITEM 9 ATP-ST 4	PHOENIX CONTACT	3002791
13	A/R	DIN RAIL NS 35/ 7,5 PERF 1155MM	PHOENIX CONTACT	1207666
14	A/R	WIRE DUCT, 2" X 4"	PANDUIT	G2X4WH6
15	A/R	WIRE DUCT COVER, 2"	PANDUIT	C2WH6
16	A/R	WIRE DUCT, 3" X 4"	PANDUIT	G3X4WH6
17	A/R	WIRE DUCT COVER, 3"	PANDUIT	C3WH6
18	A/R	END BRACKET, SNAP-ON, CLIPFIX 35	PHOENIX CONTACT	3022218
19	28	WATCHDOG TIMER RELAY SOCKET FOR ITEM 8	BRENTEK	DIN8
20	42	LABELS, LAMACOID	CUSTOM	CUSTOM

WILLIAM L. CARPENTER
LICENSED ENGINEER
No. 0092379
STATE OF TENNESSEE

DEVELOPMENT ONE, INC.
1611 East Fourth Street, Suite 250
Santa Ana, California 92701
J.Bruce Camino, Architect, AIA, NCARB
(714) 689-0298
(714) 648-0197 FAX

DATE	SYM	REVISION	BY	A'PD
10/19/09		100% FINAL DESIGN		

NATIONAL AERONAUTICS AND SPACE ADMINISTRATION
DRYDEN FLIGHT RESEARCH CENTER
EDWARDS, CA

DRAWING TITLE
PCC SCR CONTROLLER AND THERMAL CONTROLLER PANEL LAYOUT – TYPICAL

PROJECT TITLE
REPAIR BUILDING 4820 FLIGHT LOADS LABORATORY POWER CONTROL UPGRADE

APPROVALS	DATE
Chief, Facilities Engineering & Asset Mgmt. Office	6/7/10
Project Manager	5.13.10
Safety Office	5/25/10
Project Requestor	5-22-10
Safety Office	6-1-10
Telecom	5/24/10

DRAWN BY	M. HENNIGH	DATE STRTD	09/17/08
W.O. #	95099	DATE PRNTD	04/26/10
PLOT SCALE		TRADE SH. No.	I-100
CAD FILE NAME			

SHEET No. 110 of 125

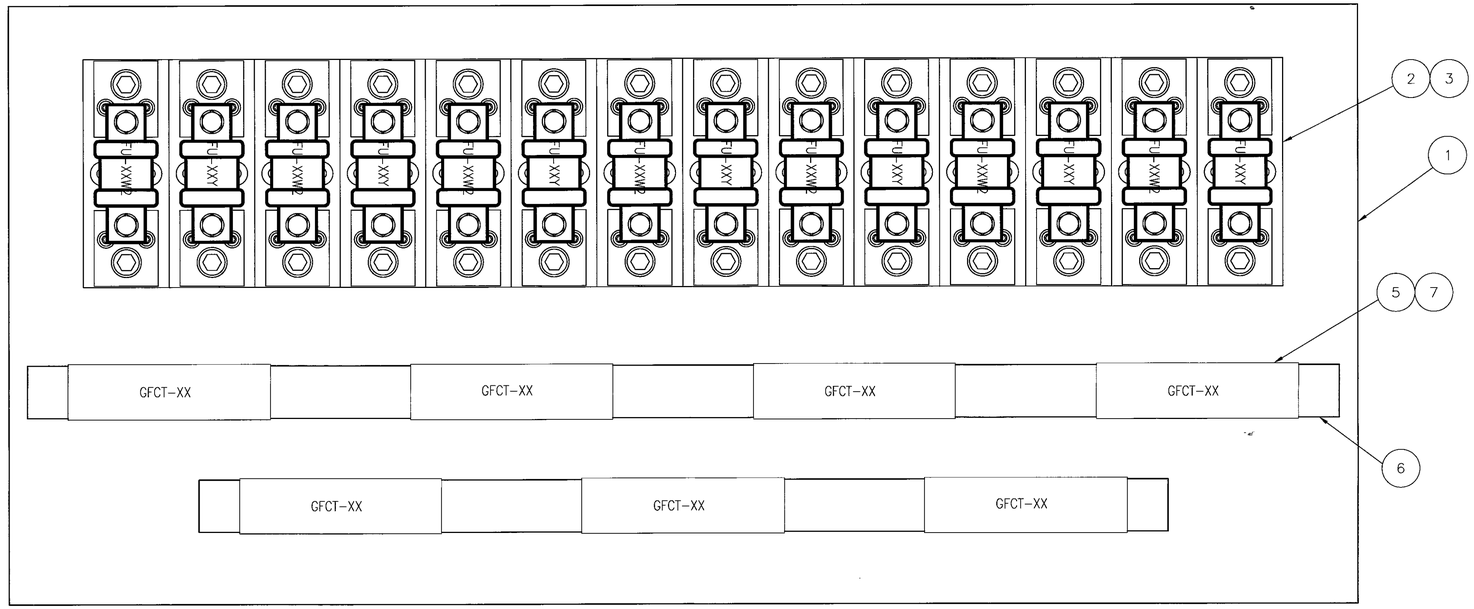

TYPE A AND TYPE B LOAD FUSE PANEL
SCALE: 1:2

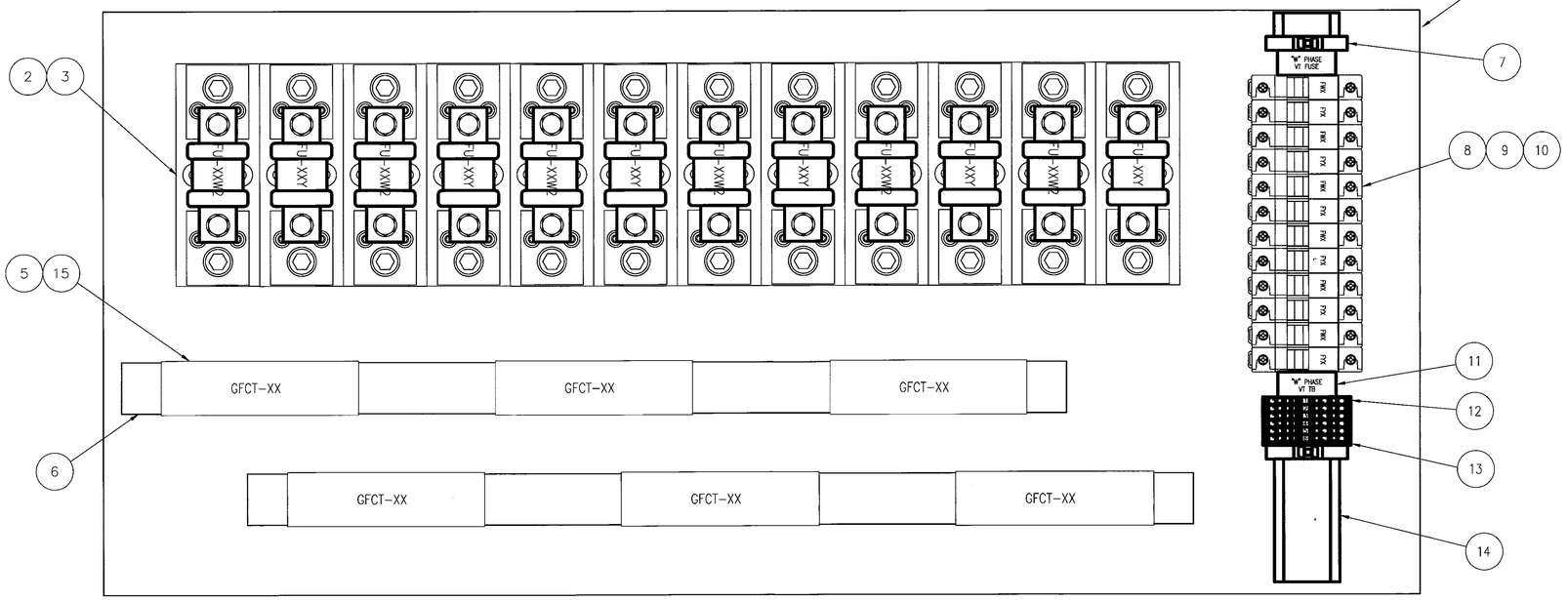

TYPE C LOAD FUSE PANEL
SCALE: 1:2

PCC TYPE A – BILL OF MATERIALS

ITEM	QTY	DESCRIPTION	MANUFACTURER	PART NUMBER
1	15	PANEL, 900 mm x 400 mm	RITTAL	TS 8614.050
2	192	LOAD FUSE	BUSSMANN	JJS–250
3	192	LOAD FUSE HOLDER	BUSSMANN	T60400–1C
4	192	FLAG TERMINAL	ERICO	FLG250
5	96	GROUND FAULT CURRENT TRANSFORMER W60	BENDER	B98080018
6	A/R	DIN RAIL NS 35/ 7,5 PERF 1155MM	PHOENIX CONTACT	1207666
7	96	SNAP–ON MOUNTING FOR W60	BENDER	B98080502

PCC TYPE B – BILL OF MATERIALS

ITEM	QTY	DESCRIPTION	MANUFACTURER	PART NUMBER
1	18	PANEL, 900 mm x 400 mm	RITTAL	TS 8614.050
2	240	LOAD FUSE	BUSSMANN	JJS–125
3	240	LOAD FUSE HOLDER	BUSSMANN	T60400–1C
4	240	FLAG TERMINAL	ERICO	FLG250
5	120	GROUND FAULT CURRENT TRANSFORMER W60	BENDER	B98080018
6	A/R	DIN RAIL NS 35/ 7,5 PERF 1155MM	PHOENIX CONTACT	1207666
7	120	SNAP–ON MOUNTING FOR W60	BENDER	B98080502

PCC TYPE C – BILL OF MATERIALS

ITEM	QTY	DESCRIPTION	MANUFACTURER	PART NUMBER
1	9	PANEL, 900 mm x 400 mm	RITTAL	TS 8614.050
2	96	LOAD FUSE	BUSSMANN	JJS–125
3	96	LOAD FUSE HOLDER	BUSSMANN	T60400–1C
4	96	FLAG TERMINAL	ERICO	FLG250
5	48	GROUND FAULT CURRENT TRANSFORMER W60	BENDER	B98080018
6	A/R	DIN RAIL NS 35/ 7,5 PERF 1155MM	PHOENIX CONTACT	1207666
7	18	END BRACKET, SNAP–ON, CLIPFIX 35	PHOENIX CONTACT	3022218
8	48	TWO POLE FUSE HOLDER	FERRAZ SHAWMUT	USM2I
9	48	TWO POLE FUSE HOLDER PIN–TIE	FERRAZ SHAWMUT	USPTH2
10	96	FUSE, 1/10 AMP	FERRAZ SHAWMUT	ATQ1/10
11	18	MARKER, TERMINAL STRIP UBE/D	PHOENIX CONTACT	800307
12	18	ST 2.5–TWIN	PHOENIX CONTACT	3031241
13	9	END COVER FOR ST 2.5–TWIN, ITEM 12, D–ST 2,5–TWIN	PHOENIX CONTACT	3030488
14	A/R	DIN RAIL NS 35/ 7,5 ALUM	PHOENIX CONTACT	0801704
15	48	SNAP–ON MOUNTING FOR W60	BENDER	B98080502

NOTES:

1. QUANTITIES FOR 5 PCCS, WITH FIFTH ENCLOSURE CONTAINING ONLY 12 SCR CHANNELS AND ASSOCIATED COMPONENTS.
2. QUANTITIES FOR 6 PCCS, WITH FIRST ENCLOSURE CONTAINING ONLY 15 SCR CHANNELS AND ASSOCIATED COMPONENTS.
3. QUANTITIES FOR 3 PCCS, WITH THIRD ENCLOSURE CONTAINING ONLY 12 SCR CHANNELS AND ASSOCIATED COMPONENTS.

DEVELOPMENT ONE, INC.
1611 East Fourth Street, Suite 250
Santa Ana, California 92701
J.Bruce Camino, Architect, AIA, NCARB
(714) 689-0298
(714) 648-0197 FAX

DATE	SYM	REVISION	BY	A'PD
10/19/09		100% FINAL DESIGN		

NATIONAL AERONAUTICS AND SPACE ADMINISTRATION
DRYDEN FLIGHT RESEARCH CENTER
EDWARDS, CA

DRAWING TITLE
PCC FUSE PANEL
LAYOUT
TYPCIAL

PROJECT TITLE
REPAIR BUILDING 4820 FLIGHT LOADS LABORATORY
POWER CONTROL UPGRADE

APPROVALS	DATE
Chief Facilities Engineering & Asset Mgmt. Office	6-17-10
Project Manager	5.13.10
Security Office	5/25/10
Project Requestor	5-22-10
Safety Office	6-4-10
Telecom	5/26/10

DRAWN BY	M. HENNIGH	DATE STRTD	09/17/08
W.O. #	95099	DATE PRNTD	04/26/10
PLOT SCALE		TRADE Std. No.	I–101
CAD FILE NAME		SHEET No.	111 of 125

NOTES:

1. QUANTITY OF 12, AS SHOWN, AND QUANTITY OF 3 WITH 4 SCRS, 4 SCR TRIGGER MODULES AND 4 CURRENT TRANSMITTERS.
2. DESIGNATOR X REPRESENTS PHASES A, B, OR C. DESIGNATOR YY REPRESENTS THE CHANNEL NUMBER.

BILL OF MATERIALS

ITEM	QTY	DESCRIPTION	MANUFACTURER	PART NUMBER
1	15	PANEL, 900 mm x 400 mm	RITTAL	TS 8614.050
2	15	HI-CONTACT LIQUID COLD PLATE MOD 24 – BARB FITTING	AAVID	416601U00000G
3	96	SCR	SEMIKRON	SKKT162/12
4	12	MOUNTING AND CONNECTION HARDWARE KIT FOR 8 SCR UNITS	SEMIKRON	33404000
5	96	SCR TRIGGER MODULE	CHROMALOX	0135-20061
6	96	SCR FUSE	BUSSMAN	JJS-250
7	15	THERMOSTAT, OPENS AT 110 DEGREE F (+/- 5 DEGREES)	HONEYWELL	3100U-3-1438
8	15	LABELS, LAMACOID	CUSTOM	CUSTOM
9	96	CURRENT TRANSMITTER, SCR OUTPUT	CARLO GAVAZZI	A 82-20 250
10	A/R	2400A BUS BAR (12mm x 100mm x 3M)	ERICO-ERIFLEX	505550
11	A/R	200A BUS BAR (6mm x 13mm x 2M)	ERICO-ERIFLEX	505054
12	A/R	BUS BAR INSULATORS, ISO 2-1/8", 3/8-16	ERICO-ERIFLEX	559683
13	A/R	DIN RAIL, HIGH-RISE NS 35/15 2000MM	PHOENIX CONTACT	1201730
14	30	END BRACKET, SNAP-ON, CLIPFIX 35	PHOENIX CONTACT	3022218
15	45	MARKER, TERMINAL STRIP UBE/D	PHOENIX CONTACT	800307
16	210	TERMINAL BLOCK, SPRING CAGE ST 2,5	PHOENIX CONTACT	3031212
17	30	END COVER FOR ITEM 16 (D-ST 2,5)	PHOENIX CONTACT	3030417
18	315	TERMINAL BLOCK, SPRING CAGE (STTB 2,5)	PHOENIX CONTACT	3031270
19	15	END COVER FOR ITEM 8, (D-STTB 2,5)	PHOENIX CONTACT	3030459
20	A/R	PHENOLIC PAPER COMPOSITE	NORFLEX	NP629

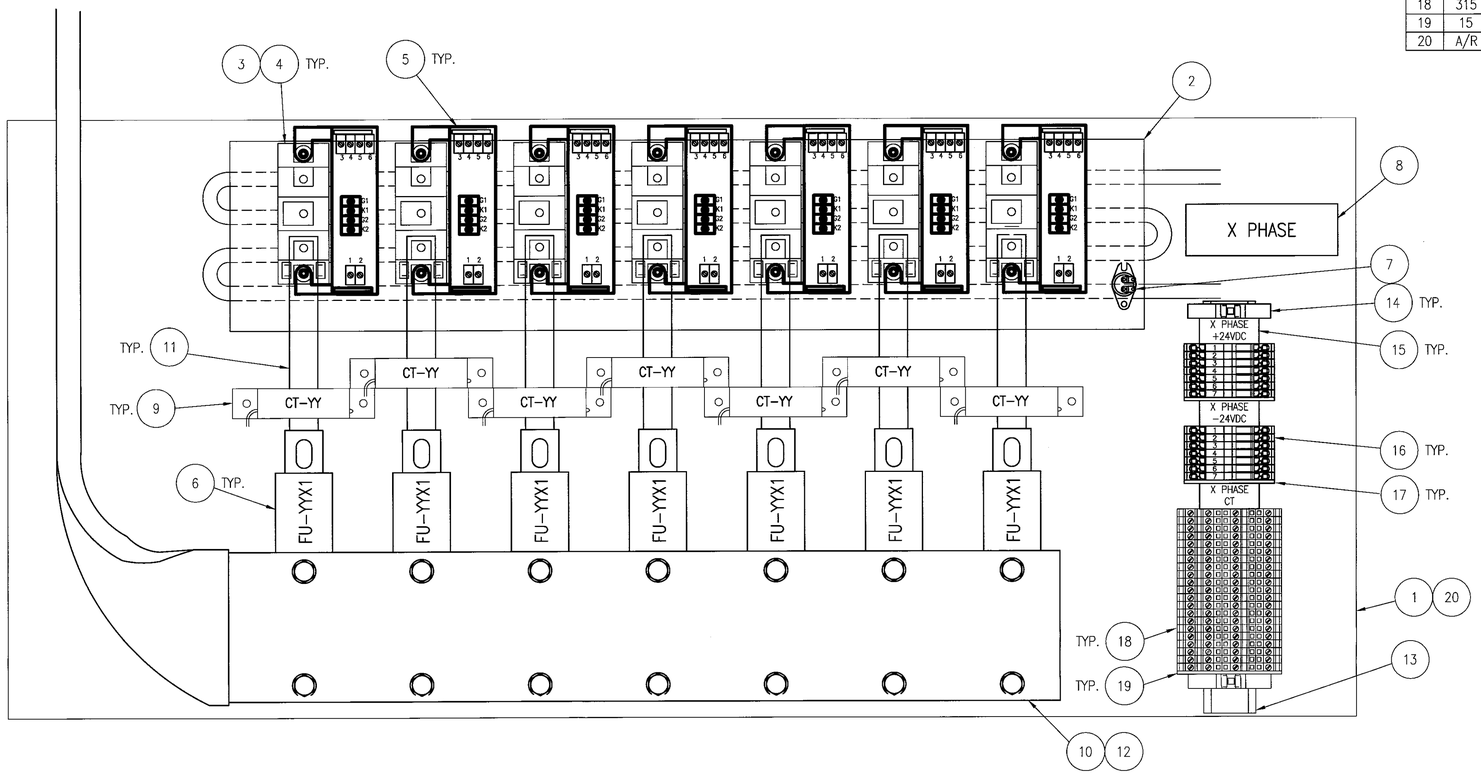

TYPE A SCR PANEL LAYOUT

SCALE: 1:2

WILLIAM L. CARPENTER III
REGISTERED ENGINEER
COMMERCE
NO. 00022978
STATE OF TENNESSEE

DEVELOPMENT ONE, INC.
1611 East Fourth Street, Suite 250
Santa Ana, California 92701
J.Bruce Camino, Architect, AIA, NCARB
(714) 689-0298
(714) 648-0197 FAX

DATE	SYM	REVISION	BY	A'PD
10/19/09		100% FINAL DESIGN		

NATIONAL AERONAUTICS AND SPACE ADMINISTRATION
DRYDEN FLIGHT RESEARCH CENTER
EDWARDS, CA

DRAWING TITLE
TYPE A 200 AMP ZERO FIRE
SCR PANEL LAYOUT
TYPICAL

PROJECT TITLE
REPAIR BUILDING 4820 FLIGHT LOADS LABORATORY
POWER CONTROL UPGRADE

APPROVALS	DATE
Chief, Facilities Engineering & Assets Mgmt. Office	6-7-10
Project Manager	5/13/10
Safety Office	5/25/10
Project Requestor	5/22/10
Safety Office	6-1-10
Telecom	5/26/10

DRAWN BY	M. HENNIGH	DATE STRTD	09/17/08
W.O. #	95099	DATE PRNTD	04/26/10
PLOT SCALE		TRADE Sht. No.	I-102
CAD FILE NAME			SHEET No. 112 of 125

NOTES:

1. QUANTITY OF 15, AS SHOWN, AND QUANTITY OF 3 WITH 5 SCRS, 5 SCR TRIGGER MODULES AND 5 CURRENT TRANSMITTERS
2. DESIGNATOR X REPRESENTS PHASES A, B, OR C. DESIGNATOR YY REPRESENTS THE CHANNEL NUMBER.

BILL OF MATERIALS

ITEM	QTY	DESCRIPTION	MANUFACTURER	PART NUMBER
1	18	PANEL, 900 mm x 400 mm	RITTAL	TS 8614.050
2	18	HI-CONTACT LIQUID COLD PLATE MOD 24 – BARB FITTING	AAVID	416601U00000G
3	120	SCR	SEMIKRON	SKKT92/12
4	15	MOUNTING AND CONNECTION HARDWARE KIT FOR 8 SCR UNITS	SEMIKRON	33404000
5	120	SCR TRIGGER MODULE	CHROMALOX	0135-20061
6	120	SCR FUSE	BUSSMAN	JJS-125
7	18	THERMOSTAT, OPENS AT 110 DEGREE F (+/- 5 DEGREES)	HONEYWELL	3100U-3-1438
8	18	LABELS, LAMACOID	CUSTOM	CUSTOM
9	120	CURRENT TRANSMITTER, SCR OUTPUT	CARLO GAVAZZI	A 82-20 250
10	A/R	1200A BUS BAR (8mm x 50mm x 3M)	ERICO-ERIFLEX	505531
11	A/R	100A BUS BAR (3mm x 9mm x 2M)	ERICO-ERIFLEX	505051
12	A/R	BUS BAR INSULATORS, ISO 2-1/8", 3/8-16	ERICO-ERIFLEX	559683
13	A/R	DIN RAIL, HIGH-RISE NS 35/15 2000MM	PHOENIX CONTACT	1201730
14	36	END BRACKET, SNAP-ON, CLIPFIX 35	PHOENIX CONTACT	3022218
15	54	MARKER, TERMINAL STRIP UBE/D	PHOENIX CONTACT	800307
16	252	TERMINAL BLOCK, SPRING CAGE ST 2,5	PHOENIX CONTACT	3031212
17	36	END COVER FOR ITEM 16 (D-ST 2,5)	PHOENIX CONTACT	3030417
18	378	TERMINAL BLOCK, SPRING CAGE (STTB 2,5)	PHOENIX CONTACT	3031270
19	18	END COVER FOR ITEM 8, (D-STTB 2,5)	PHOENIX CONTACT	3030459
20	A/R	PHENOLIC PAPER COMPOSITE	NORFLEX	NP629

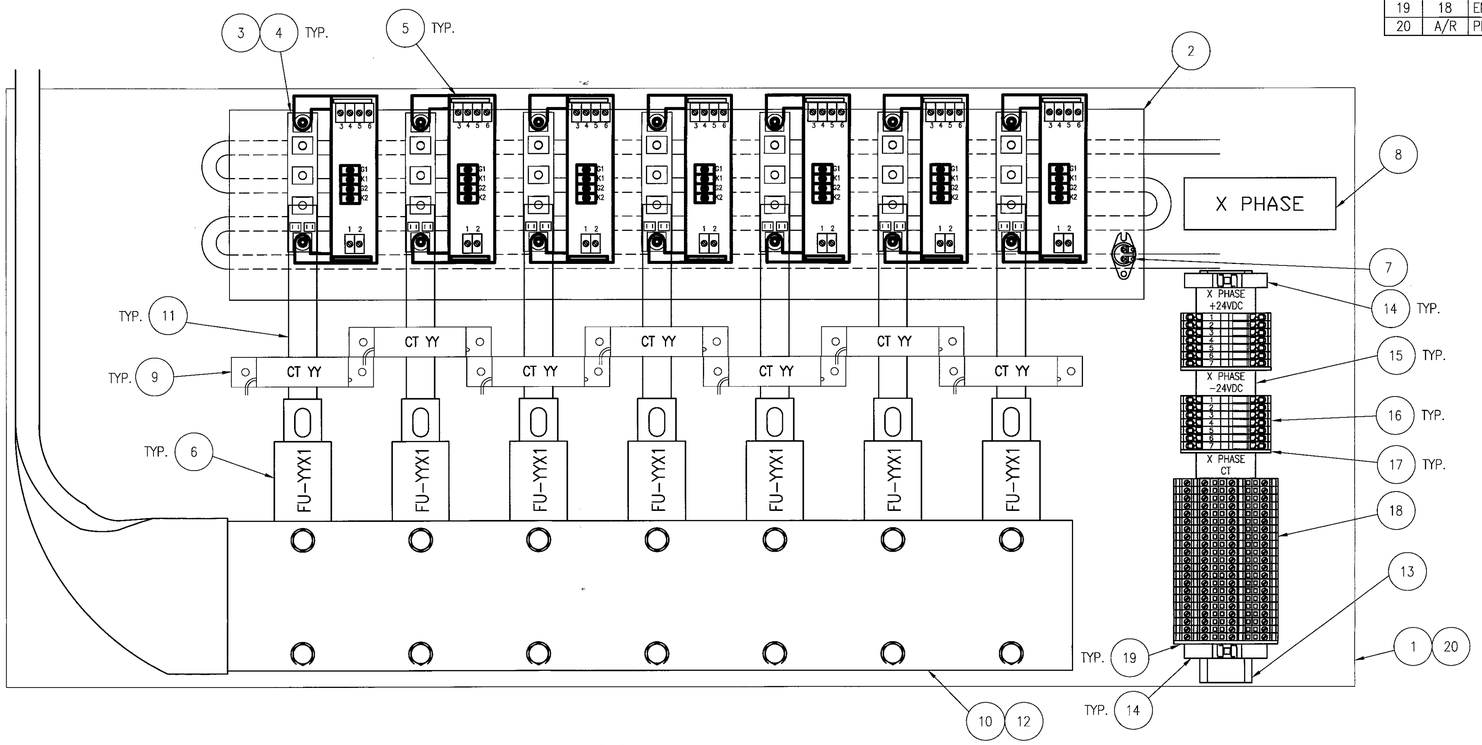

TYPE "B" SCR PANEL LAYOUT
SCALE: 1:2

WILLIAM L. CARPENTER JR. REGISTERED ENGINEER No. 0002978 STATE OF TENNESSEE

DEVELOPMENT ONE, INC.
1611 East Fourth Street, Suite 250
Santa Ana, California 92701
J.Bruce Camino, Architect, AIA, NCARB
(714) 689-0298
(714) 648-0197 FAX

DATE	SYM	REVISION	BY	A'PD
10/19/09		100% FINAL DESIGN		

NATIONAL AERONAUTICS AND SPACE ADMINISTRATION
DRYDEN FLIGHT RESEARCH CENTER
EDWARDS, CA

DRAWING TITLE
TYPE B 200 AMP ZERO FIRE SCR PANEL LAYOUT TYPICAL

PROJECT TITLE
REPAIR BUILDING 4820 FLIGHT LOADS LABORATORY POWER CONTROL UPGRADE

APPROVALS	DATE
Chief, Facilities Engineering & Asset Mgmt. Office	6-17-10
Project Manager	5-13-10
Safety Office	5/25/10
Project Resident	5-22-10
Safety Office	6-1-10
Telecom	5/24/10

DRAWN BY	M. HENNIGH	DATE STRTD	09/17/08
W.O. #	95099	DATE PRNTD	04/26/10
PLOT SCALE		TRADE SK. No.	I-103
CAD FILE NAME		SHEET No.	113 of 125

NOTES:

1. QUANTITY OF 6, AS SHOWN, AND QUANTITY OF 3 WITH 4 SCRS, 4 SCR TRIGGER MODULES AND 4 CURRENT TRANSMITTERS.
2. DESIGNATOR X REPRESENTS PHASES A, B, OR C. DESIGNATOR YY REPRESENTS THE CHANNEL NUMBER.

BILL OF MATERIALS

ITEM	QTY	DESCRIPTION	MANUFACTURER	PART NUMBER
1	9	PANEL, 900 mm x 400 mm	RITTAL	TS 8614.050
2	9	HI-CONTACT LIQUID COLD PLATE MOD 24 - BARB FITTING	AAVID	416601U00000G
3	48	SCR	SEMIKRON	SKKT92/12
4	6	MOUNTING AND CONNECTION HARDWARE KIT FOR 8 SCR UNITS	SEMIKRON	33404000
5	48	SCR TRIGGER MODULE	CHROMALOX	0135-20061
6	48	SCR FUSE	BUSSMAN	JJS-125
7	9	THERMOSTAT, OPENS AT 110 DEGREE F (+/- 5 DEGREES)	HONEYWELL	3100U-3-1438
8	9	LABELS, LAMACOID	CUSTOM	CUSTOM
9	48	CURRENT TRANSMITTER, SCR OUTPUT	CARLO GAVAZZI	A 82-20 250
10	A/R	1200A BUS BAR (8mm x 50mm x 3M)	ERICO-ERIFLEX	505531
11	A/R	100A BUS BAR (3mm x 9mm x 2M)	ERICO-ERIFLEX	505051
12	A/R	BUS BAR INSULATORS, ISO 2-1/8", 3/8-16	ERICO-ERIFLEX	559683
13	A/R	DIN RAIL, HIGH-RISE NS 35/15 2000MM	PHOENIX CONTACT	1201730
14	18	END BRACKET, SNAP-ON, CLIPFIX 35	PHOENIX CONTACT	3022218
15	27	MARKER, TERMINAL STRIP UBE/D	PHOENIX CONTACT	800307
16	108	TERMINAL BLOCK, SPRING CAGE ST 2,5	PHOENIX CONTACT	3031212
17	18	END BARRIER FOR ITEM 16 (D-ST, 2.5)	PHOENIX CONTACT	3030417
18	162	TERMINAL BLOCK, SPRING CAGE (STTB 2,5)	PHOENIX CONTACT	3031270
19	9	END COVER FOR ITEM 8, (D-STTB 2,5)	PHOENIX CONTACT	3030459
20	A/R	PHENOLIC PAPER COMPOSITE	NORFLEX	NP629

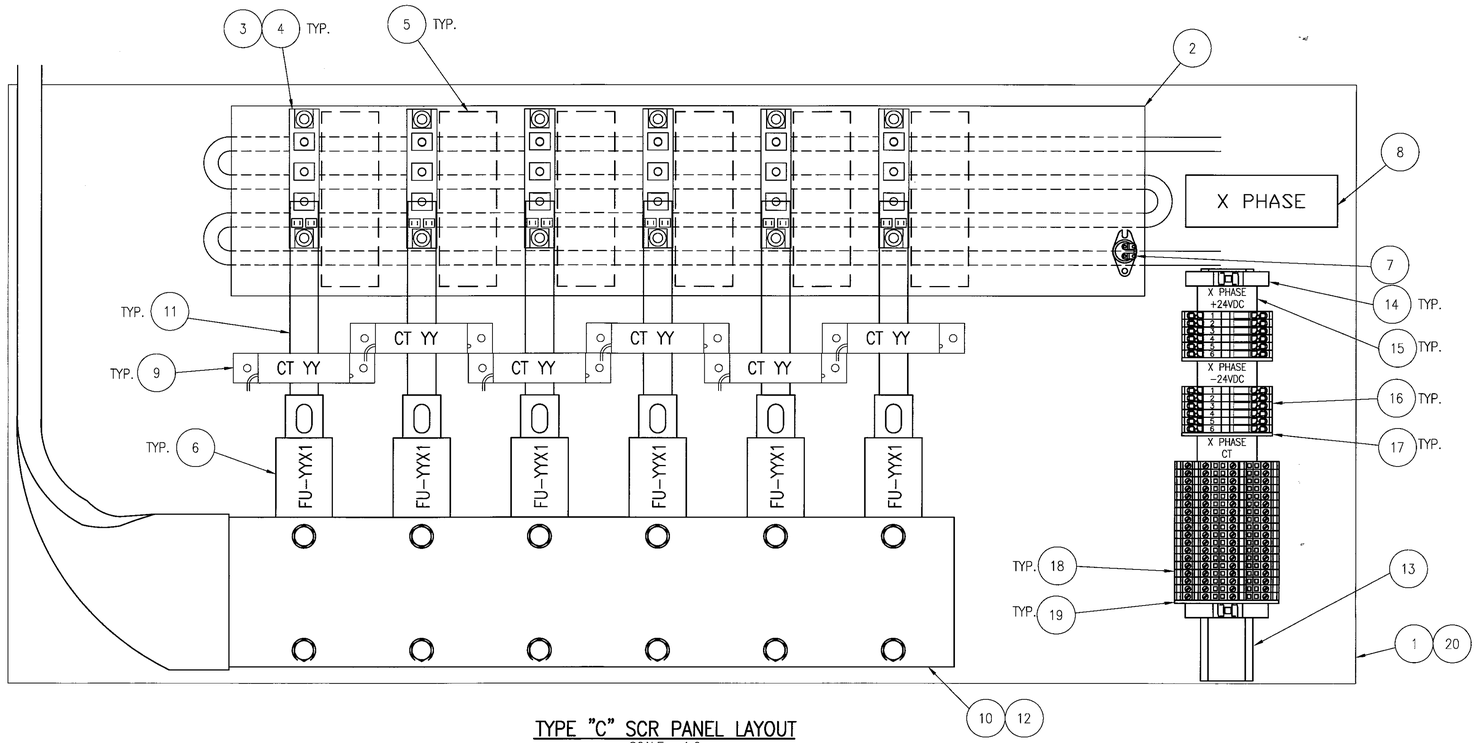

TYPE "C" SCR PANEL LAYOUT
SCALE: 1:2

WILLIAM L. CARPENTER JR. REGISTERED ENGINEER No. 0902279 STATE OF TENNESSEE

DEVELOPMENT ONE, INC.
1611 East Fourth Street, Suite 250
Santa Ana, California 92701
J.Bruce Camino, Architect, AIA, NCARB
(714) 689-0298
(714) 648-0197 FAX

DATE	SYM	REVISION	BY	A'PD
10/19/09		100% FINAL DESIGN		

NATIONAL AERONAUTICS AND SPACE ADMINISTRATION
DRYDEN FLIGHT RESEARCH CENTER
EDWARDS, CA

DRAWING TITLE
TYPE C 200 AMP ZERO FIRE
SCR PANEL LAYOUT
TYPICAL

PROJECT TITLE
REPAIR BUILDING 4820 FLIGHT LOADS LABORATORY
POWER CONTROL UPGRADE

APPROVALS	DATE
Chief, Facilities Engineering & Asset Mgmt. Office	6-17-10
Project Manager	5.13.10
Safety Office	6/15/10
Project Requestor	5.22.10
Safety Office	6-7-10
Telecom	5/24/10

DRAWN BY	M. HENNIGH	DATE STRTD	09/17/08
W.O. #	95099	DATE PRNTD	04/26/10
PLOT SCALE		TRADE SH. No.	I-104
CAD FILE NAME			

SHEET No. 114 of 125

NOTES:

1. THIS PANEL IS SHOWN FOR PCC A1 – A4 AND B2– B6. FOR PCC A5, THERE WILL BE 12 CHANNELS. THEREFORE, TB TC SLOT 4, 5 AND 6 WILL CONTAIN ONLY TERMINAL BLOCKS 1–10, EXACTLY LIKE TB TC SLOT 6 ON SHEET I–106. FOR PCC B1, THERE WILL BE 15 CHANNELS, THEREFORE TB TC SLOT 5 AND 6 WILL CONTAIN ONLY TERMINAL BLOCKS 1–10, EXACTLY LIKE TB TC SLOT 6 ON SHEET I–106.

2 THE DELTA P TB WILL BE INSTALLED IN PCC A1 ONLY.

THERMAL CONTROLLER SWING–OUT PANEL BOM				
ITEM	QTY	PART DESCRIPTION	MANUFACTURER	PART NUMBER
1	11	PANEL, PARTIAL MOUNTING 900MM X 400MM	RITTAL	8614.050
2	11	HINGE KIT FOR ITEM 1	RITTAL	8614.100
3	110	END BRACKET, SNAP–ON, CLIPFIX 35	PHOENIX CONTACT	3022218
4	122	MARKER, TERMINAL STRIP UBE/D	PHOENIX CONTACT	0800307
5	293	RELAY, FORM C (PLC–RSP–24DC/21–21AU)	PHOENIX CONTACT	2912578
6	576	TERMINAL BLOCK, SPRING CAGE (ST 2,5)	PHOENIX CONTACT	3031212
7	45	END COVER FOR ITEM 6, (D–ST 2,5)	PHOENIX CONTACT	3030417
8	660	TERMINAL BLOCK, SPRING CAGE (STTB 2,5)	PHOENIX CONTACT	3031270
9	66	END COVER FOR ITEM 8, (D–STTB 2,5)	PHOENIX CONTACT	3030459
10	A/R	DIN RAIL (NS 35/ 7,5 PERF 1155MM)	PHOENIX CONTACT	1207666
11	A/R	WIRE DUCT (1" x 4") COVER PART# (C1WH6)	PANDUIT	G1X4WH6
12	A/R	WIRE DUCT (1.5" x 4") COVER PART# (C1.5WH6)	PANDUIT	G1.5X4WH6
13	A/R	WIRE DUCT (2" x 4") COVER PART# (C2WH6)	PANDUIT	G2X4WH6

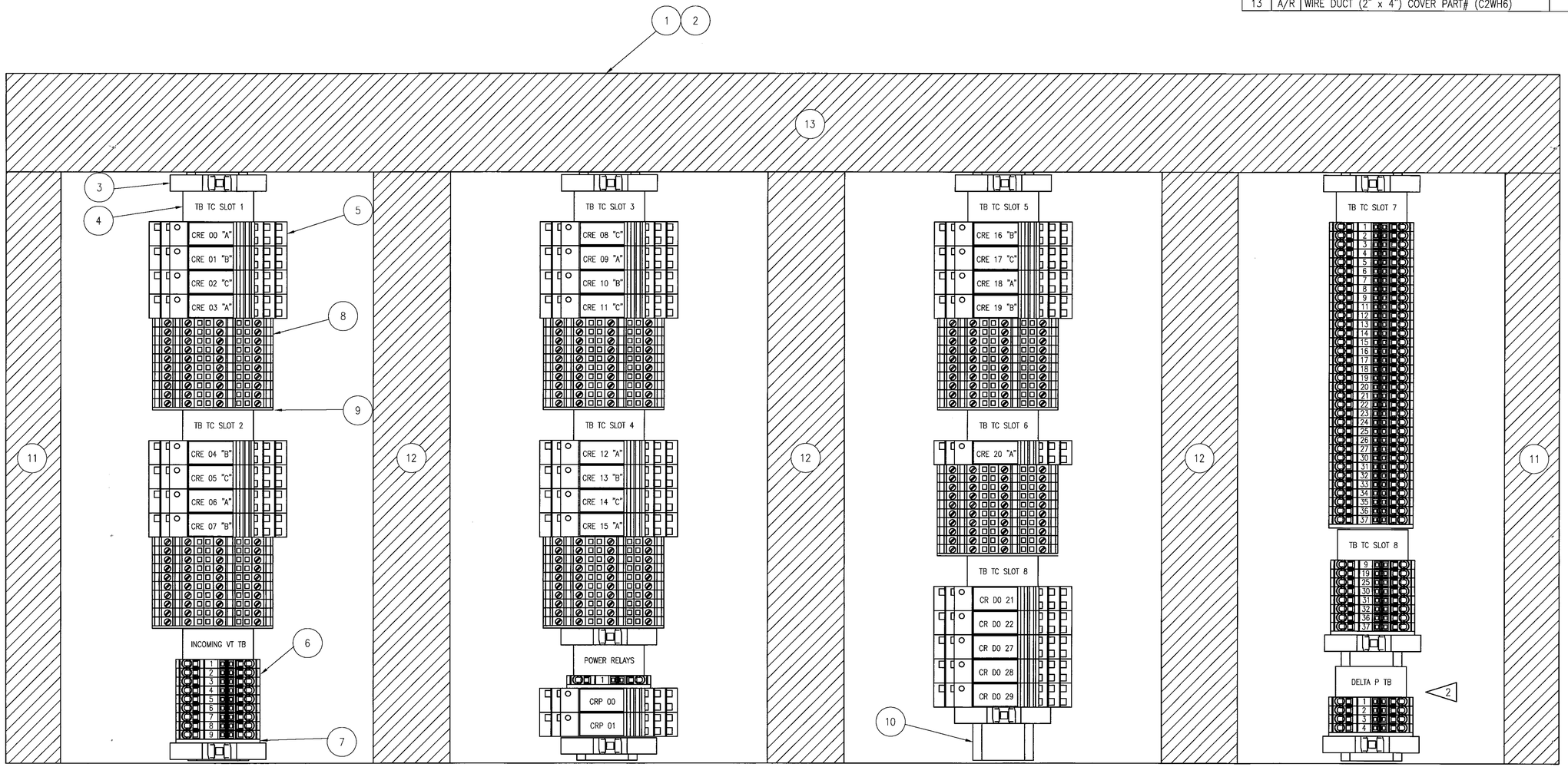

THERMAL CONTROLLER SWING–OUT PANEL
SCALE: 3/4

DEVELOPMENT ONE, INC.
1611 East Fourth Street, Suite 250
Santa Ana, California 92701
J.Bruce Camino, Architect, AIA, NCARB
(714) 689-0298
(714) 648-0197 FAX

WILLIAM L. CARPENTER III — REGISTERED ENGINEER — STATE OF TENNESSEE — No. 00022979

DATE	SYM	REVISION	BY	A'PD
10/19/09		100% FINAL DESIGN		

NATIONAL AERONAUTICS AND SPACE ADMINISTRATION
DRYDEN FLIGHT RESEARCH CENTER
EDWARDS, CA

DRAWING TITLE
PCC SWING OUT
PANEL LAYOUT
ZERO FIRED

PROJECT TITLE
REPAIR BUILDING 4820 FLIGHT LOADS LABORATORY
POWER CONTROL UPGRADE

APPROVALS	DATE
Chief, Facilities Engineering & Asset Mgmt. Office	6-17-10
Project Manager	5.13.10
Safety Office	5/25/10
Project Requestor	5.22.10
Safety Office	6-4-10
Telecom	5/26/10

DRAWN BY	M. HENNIGH	DATE STRTD	09/17/08
W.O. #	95099	DATE PRNTD	04/26/10
PLOT SCALE		TRADE Sht. No.	I–105
CAD FILE NAME			SHEET No. 115 of 125

NOTE:

1. THIS PANEL IS SHOWN FOR PCC C1 AND C2. FOR PCC C3, THERE WILL BE 12 CHANNELS. THEREFORE, TB TC SLOT 4, 5 AND 6 WILL CONTAIN ONLY TERMINAL BLOCKS 1–10,

THERMAL CONTROLLER SWING–OUT PANEL BOM

ITEM	QTY	PART DESCRIPTION	MANUFACTURER	PART NUMBER
1	3	PANEL, PARTIAL MOUNTING 900MM X 400MM	RITTAL	8614.050
2	3	HINGE KIT FOR ITEM 10	RITTAL	8614.100
3	27	END BRACKET, SNAP–ON, CLIPFIX 35	PHOENIX CONTACT	3022218
4	30	MARKER, TERMINAL STRIP UBE/D	PHOENIX CONTACT	0800307
5	69	RELAY, FORM C (PLC–RSP–24DC/21–21AU)	PHOENIX CONTACT	2912578
6	156	TERMINAL BLOCK, SPRING CAGE (ST 2,5)	PHOENIX CONTACT	3031212
7	10	END COVER FOR ITEM 6, (D–ST 2,5)	PHOENIX CONTACT	3030417
8	180	TERMINAL BLOCK, SPRING CAGE (STTB 2,5)	PHOENIX CONTACT	3031270
9	18	END COVER FOR ITEM 8, (D–STTB 2,5)	PHOENIX CONTACT	3030459
10	A/R	DIN RAIL (NS 35/ 7,5 PERF 1155MM)	PHOENIX CONTACT	1207666
11	A/R	WIRE DUCT (1" x 4") COVER PART# (C1WH6)	PANDUIT	G1X4WH6
12	A/R	WIRE DUCT (1.5" x 4") COVER PART# (C1.5WH6)	PANDUIT	G1.5X4WH6
13	A/R	WIRE DUCT (2" x 4") COVER PART# (C2WH6)	PANDUIT	G2X4WH6

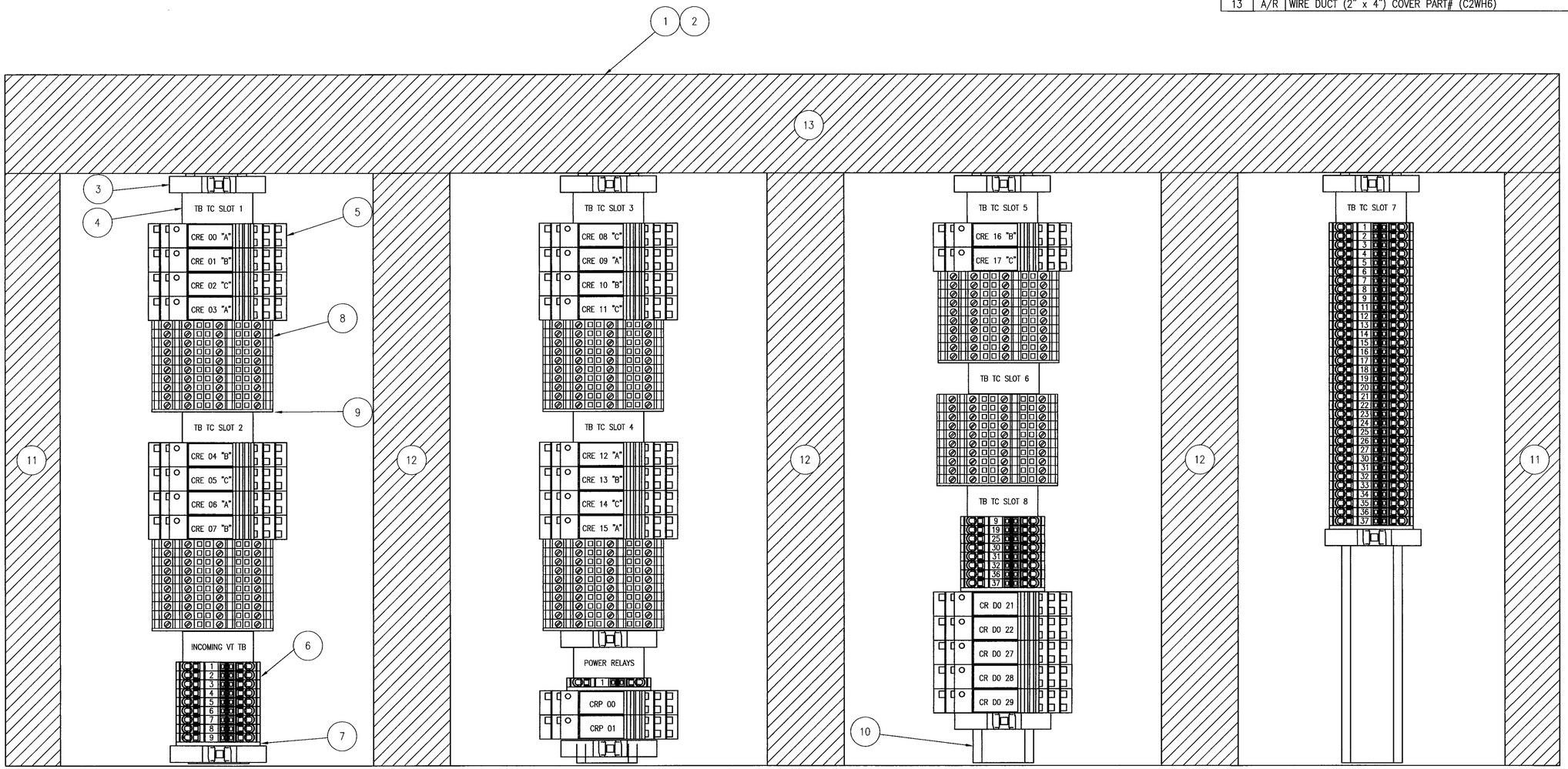

THERMAL CONTROLLER (PCC TYPE C) SWING–OUT PANEL

SCALE: 3/4

WILLIAM L. CARPENTER, JR. REGISTERED ENGINEER No. 0002379 STATE OF TENNESSEE

DEVELOPMENT ONE, INC.
1611 East Fourth Street, Suite 250
Santa Ana, California 92701
J.Bruce Camino, Architect, AIA, NCARB
(714) 689-0298
(714) 648-0197 FAX

DATE	SYM	REVISION	BY	A'PD
10/19/09		100% FINAL DESIGN		

NATIONAL AERONAUTICS AND SPACE ADMINISTRATION
DRYDEN FLIGHT RESEARCH CENTER
EDWARDS, CA

DRAWING TITLE
PCC SWING OUT
PANEL LAYOUT
PHASE FIRED

PROJECT TITLE
REPAIR BUILDING 4820 FLIGHT LOADS LABORATORY
POWER CONTROL UPGRADE

APPROVALS	DATE
Chief–Facilities Engineering & Asset Mgmt. Office	6-17-10
Project Manager	5-13-10
Security Office	5/25/10
Project Requestor	5-22-10
Safety Office	6-1-10
Telecom	5/26/10

DRAWN BY	M. HENNIGH	DATE STRTD	09/17/08
W.O. #	95099	DATE PRNTD	04/26/10
PLOT SCALE		TRADE Sht. No.	I–106
CAD FILE NAME			

SHEET No. 116 of 125

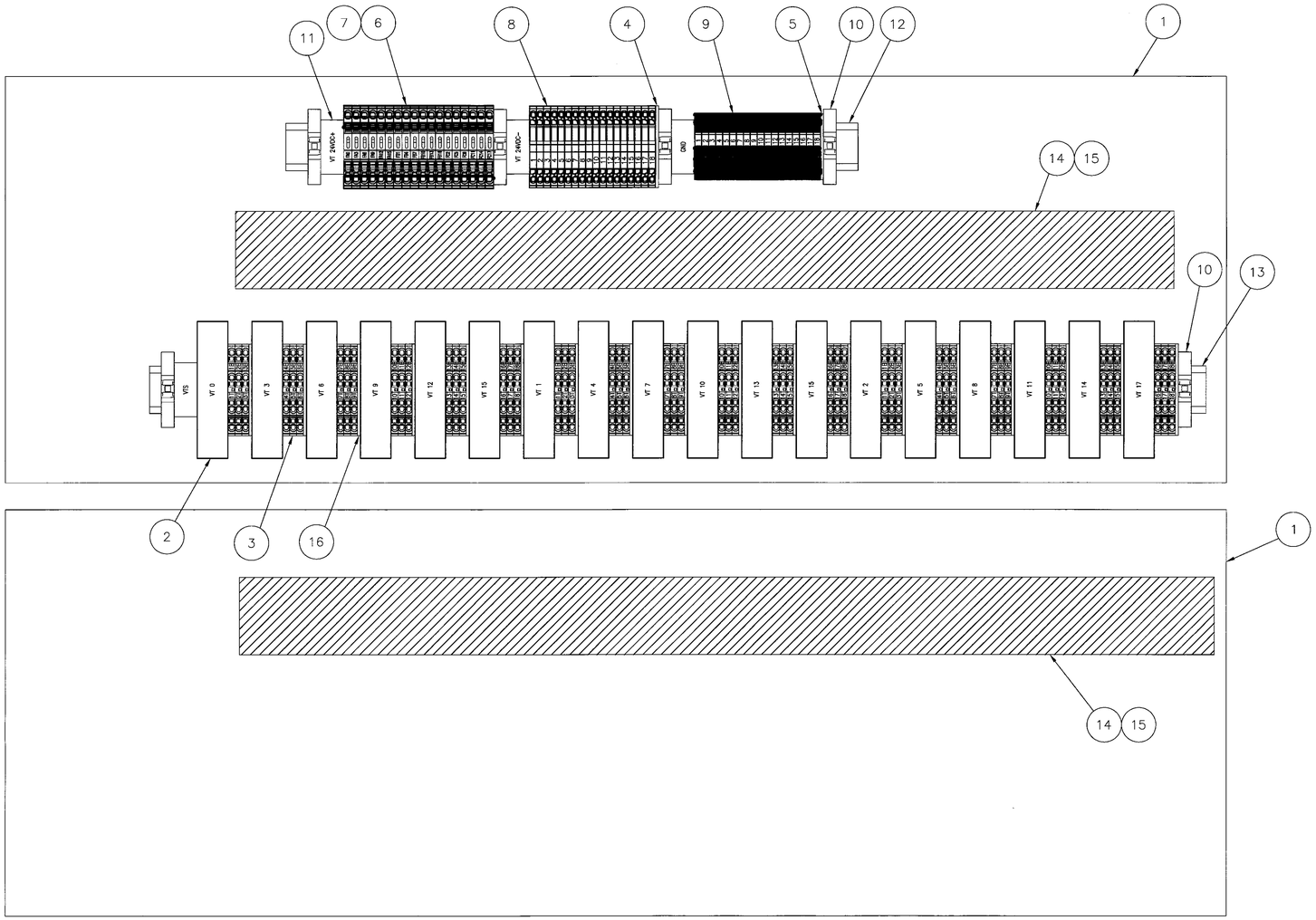

BILL OF MATERIALS

ITEM	QTY	DESCRIPTION	MANUFACTURER	PART NUMBER
1	6	PANEL, 900 mm x 400 mm	RITTAL	TS 8614.050
2	48	VOLTAGE TRANSDUCER	LAUREL ELECTRONICS	LTA210RMV5
3	144	TERMINAL BLOCK, SPRING GAGE (D-STTB 2,5)	PHOENIX CONTACT	3031270
4	3	END COVER FOR ITEM 8, (D-ST 2,5-TWIN)	PHOENIX CONTACT	3030488
5	3	END COVER FOR ITEM 9, (D-ST 2,5)	PHOENIX CONTACT	3030417
6	48	24VDC FUSE HOLDER WITH INDICATION - ST 4-HESILED 24 (5X20)	PHOENIX CONTACT	3036547
7	48	5X20 FUSE, 1/4 AMP, 24VDC	FERRAZ SHAWMUT	GSB1/4
8	48	KNIFE DISCONNECT TERMINAL BLOCK (ST 2,5-MT)	PHOENIX CONTACT	3036343
9	48	GROUNDING TERMINAL BLOCK (ST 2,5-PE)	PHOENIX CONTACT	3031238
10	24	SNAP-ON END BRACKET CLIPFIX 35	PHOENIX CONTACT	3022218
11	15	LABEL CARRIER - UBE/D	PHOENIX CONTACT	0800307
12	A/R	DIN RAIL NS 35/15	PHOENIX CONTACT	1206586
13	A/R	DIN RAIL NS 35/7,5 ALUM	PHOENIX CONTACT	0801704
14	A/R	WIRE DUCT, 2" X 4"	PANDUIT	G2X4WH6
15	A/R	WIRE DUCT COVER, 2"	PANDUIT	G2WH6
16	48	END COVER FOR ITEM 3, (D-STTB 2,5)	PHOENIX CONTACT	3030459

WILLIAM L. CARPENTER JR. REGISTERED ENGINEER No. 00022979 STATE OF TENNESSEE

DEVELOPMENT ONE, INC.
1611 East Fourth Street, Suite 250
Santa Ana, California 92701
J.Bruce Camino, Architect, AIA, NCARB
(714) 689-0298
(714) 648-0197 FAX

DATE	SYM	REVISION	BY	A'PD
10/19/09		100% FINAL DESIGN		

NATIONAL AERONAUTICS AND SPACE ADMINISTRATION
DRYDEN FLIGHT RESEARCH CENTER
EDWARDS, CA

DRAWING TITLE
PCC TYPE C
VT PANEL LAYOUT

PROJECT TITLE
REPAIR BUILDING 4820 FLIGHT LOADS LABORATORY
POWER CONTROL UPGRADE

APPROVALS	DATE
Chief, Facilities Engineering & Assets Mgmt. Office	6-17-10
Project Manager	5.13.10
Security Office	5/25/10
Project Requestor	5-22-10
Safety Office	6-4-10
Telecom	5/26/10

DRAWN BY	M. HENNIGH	DATE STRTD	09/17/08
W.O. #	95099	DATE PRNTD	04/26/10
PLOT SCALE		TRADE Sht. No.	I-107
CAD FILE NAME			SHEET No. 117 of 125

NOTES:

1. 24VDC POWER WIRING SHALL BE 16AWG UNLESS OTHERWISE NOTED.
2. DASHED LINES INDICATE CONDUCTORS TO BE FIELD INSTALLED AND TERMINATED.
3. XX = PCC TYPE AND ID, A1–A5, B1–B6, C1–C3.
4. SEE SHEET I–111 FOR PANEL LAYOUT AND BOM.

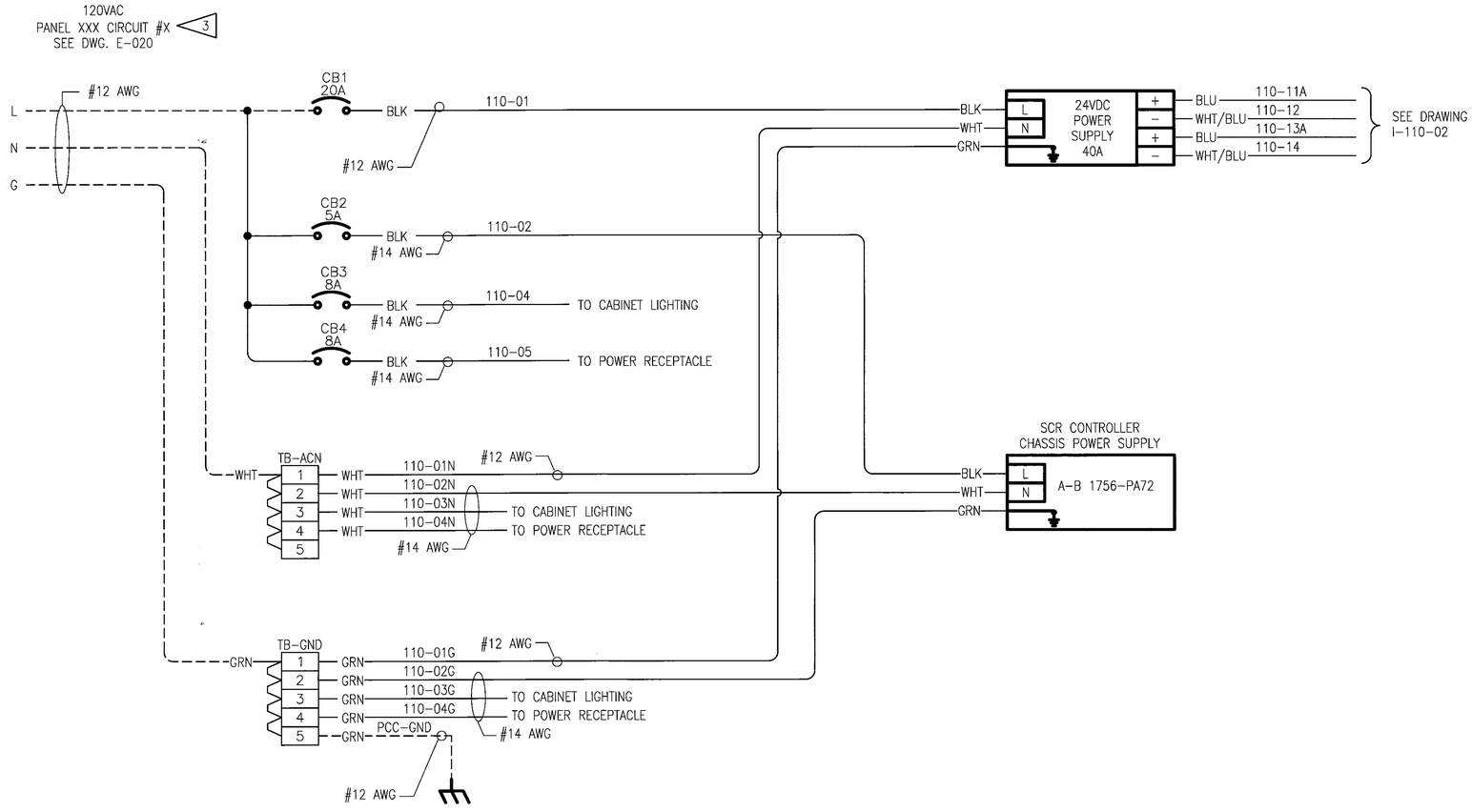

DEVELOPMENT ONE, INC.
1611 East Fourth Street, Suite 250
Santa Ana, California 92701
J.Bruce Camino, Architect, AIA, NCARB
(714) 689-0298
(714) 648-0197 FAX

WILLIAM L. CARPENTER JR. REGISTERED ENGINEER No. 0002978 COMMERCIAL STATE OF TENNESSEE

DATE	SYM	REVISION	BY	A'PD
10/19/09		100% FINAL DESIGN		

NATIONAL AERONAUTICS AND SPACE ADMINISTRATION
DRYDEN FLIGHT RESEARCH CENTER
EDWARDS, CA

DRAWING TITLE
PCC 120VAC & 24VDC
POWER DISTRIBUTION DETAILS
TYPICAL (SHEET 1)

PROJECT TITLE
REPAIR BUILDING 4820 FLIGHT LOADS LABORATORY
POWER CONTROL UPGRADE

APPROVALS	DATE
Chief, Facilities Engineering & Asset Mgmt. Office	6-17-10
Project Manager	5.13.10
Security Office	5/21/10
Project Inspector	5.22.10
Safety Office	6-1-10
Telecom	5/26/10

DRAWN BY	M. HENNIGH	DATE STRTD	09/17/08
W.O. #	95099	DATE PRNTD	04/26/10
PLOT SCALE		TRADE Sht. No.	I–110–01
CAD FILE NAME			

SHEET No. 118 of 125

NOTES:

1. 24VDC POWER WIRING SHALL BE 16AWG UNLESS OTHERWISE NOTED.
2. DASHED LINES INDICATE CONDUCTORS TO BE FIELD INSTALLED AND TERMINATED.
3. XX = PCC TYPE AND ID, A1–A5, B1–B6, C1–C3.
4. RELAYS AND TERMINAL BLOCK SHOWN ON I–105 (FOR PCC TYPES A & B) AND I–106 (FOR PCC TYPE C).

TO DRAWING I–110–01

110–11A BLU
110–12 WHT/BLU
110–13A BLU
110–14 WHT/BLU

CB5 20A — #12AWG — 110–11B — TB1–24+

1FU — 110–11C — BLU

2FU — BLU — 110–2FU — SAFETY RELAY X3–1 (TO DWG. I–070, E–023)

3FU — BLU — 110–3FU — CRP01 (11, 14) — BLU — I110–3FUA — PCC CB OPEN X6–14 (TO DWG. E–023)

4FU — BLU — 110–4FU — 1 — 110–4FUA — CRP00 (11, 14) — BLU — I110–4FUA1 — PCC CB CLOSE X6–7(TO DWG. E–023)

4 — BLU — I110–4FUB — PCC CB CLOSE X5–2 (TO DWG. E–023)

5FU — BLU — I110–5FU — PCC CB BELL ALARM, "RDY TO CLOSE", AND BREAKER STATUS (TO DWG. E–023)

6FU — BLU — I110–6FU — PCC CB TRIP UNIT POWER X8–3 (TO DWG. E–023)

7FU — BLU — 110–7FU — SAFETY RELAY X2–6 (TO DWG. I–070)

8FU — BLU — 110–8FU — SAFETY RELAY OUTPUTS X2–7 (TO DWG. I–070)

9FU — BLU — 110–9FU — INCOMING LINE VTS (TO DWG. I–046)

10FU — BLU — A1–110–10FU — #14 AWG — CONTROL ROOM E–STOP 4 (TO DWG. I–081)

11FU — BLU — XX–I110–11FU — ISOLATION SWITCH AUX CONTACT (TO DWG. E–013) — 3

12FU — BLU — 110–12FU — GND. FLT. UNIT 1–A1 (TO DWG. I–055)

CB6 20A — 110–13B — #12AWG

13FU — BLU — 110–13FU — GND. FLT. UNIT 2–A1 (TO DWG. I–056)

14FU — BLU — 110–14FU — ETHERNET SWITCH +24 VDC (THERMAL CONTROLLER PANEL)

15FU — BLU — 110–15FU — TB "A" +24 VDC–1 (TO DWG. I–050 FOR ZERO TRIGGER, OR DWG. I–057 FOR PHASE CONTROL)

16FU — BLU — 110–16FU — TB "B" +24 VDC–1 (TO DWG. I–051 FOR ZERO TRIGGER, OR DWG. I–058 FOR PHASE CONTROL)

17FU — BLU — 110–17FU — TB "C" +24 VDC–1 (TO DWG. I–052 FOR ZERO TRIGGER, OR DWG. I–059 FOR PHASE CONTROL)

18FU — BLU — 110–18FU — TB TC SLOT 1 (TO DWG. I–011–01)

19FU — BLU — 110–19FU — TB TC SLOT 2–9 (TO DWG. I–011–01)

20FU — BLU — 110–20FU — TB TC SLOT 3–9 (TO DWG. I–011–02)

21FU — BLU — 110–21FU — TB TC SLOT 4–9 (TO DWG. I–011–02)

22FU — BLU — 110–22FU — TB TC SLOT 5–9 (TO DWG. I–011–03)

23FU — BLU — 110–23FU — TB TC SLOT 6–9 (TO DWG. I–011–03)

24FU — BLU — 110–24FU — TB TC SLOT 8–9 (TO DWG. I–014)

25FU — BLU — 110–25FU — SC SLOT 8 RTB–10 (TO DWG. I–033)

26FU — BLU — 110–26FU — SC SLOT 8 RTB–20 (TO DWG. I–033)

27FU — BLU — 110–27FU — SC SLOT 9 RTB–10 (TO DWG. I–033)

28FU — BLU — 110–28FU — SC SLOT 9 RTB–20 (TO DWG. I–033)

29FU — BLU — 110–29FU — VOLTAGE TRANSMITTERS (TO DWG. I–047)

30FU — BLU — 110–30FU — #14AWG — CHILLER DELTA P TB–1 (TO DWG. I–031–03)

31FU — BLU — 110–31FU

32FU — BLU — 110–32FU — (TO DWG. I–080)

33FU — BLU — PCCA1–110–33FU

THERMAL CONTROLLER
V1
C
V2
C
NATIONAL INST. CRIO–9014

WHT/BLU

TB2–24VCOM

		1	WHT/BLU	110–TB2–01	
SC WDT–7 (TO DWG. I–080)	110–TB2–02B WHT/BLU	2	WHT/BLU	I110–TB2–02A	PCC CB OPEN X5–11 AND X6–13 (TO DWG. E–023)
TC WDT–7 (TO DWG. I–080)	110–TB2–03B WHT/BLU	3	WHT/BLU	110–TB2–03	STACK LIGHTS PIN 0 (TO DWG. I–120)
		4	WHT/BLU	I110–TB2–04	PCC CB CLOSE X6–8 AND X5–1 (TO DWG. E–023)
		5	WHT	XX–110–TB2–05	24 VDC COMMON REFERENCE JUNCTION (TO DWG. I–091) — 3
				#8 AWG	
CHILLER DELTA P TB–2 (TO DWG. I–031–03)	#14AWG 110–TB2–06B WHT/BLU	6	WHT/BLU	I110–TB2–06	PCC CB TRIP UNIT X8–4 (TO DWG. E–023)
SC SLOT 2 RTB–9 (TO DWG. I–031–01, I–035–01)	110–TB2–07B WHT/BLU	7	WHT/BLU	110–TB2–07A	SAFETY RELAY X2–8 (TO DWG. I–070)
SC SLOT 2 RTB–10 (TO DWG. I–031–01, I–035–01)	110–TB2–08B WHT/BLU	8	WHT/BLU	110–TB2–08A	SAFETY RELAY OUTPUTS X2–9 (TO DWG. I–070)
SC SLOT 2 RTB–27 (TO DWG. I–031–01, I–035–01)	110–TB2–09B WHT/BLU	9	WHT/BLU	110–TB2–09A	INCOMING LINE VTS (TO DWG. I–046)
SC SLOT 2 RTB–28 (TO DWG. I–031–01, I–035–01)	110–TB2–10B WHT/BLU	10	WHT/BLU	110–TB2–10A	CRE 00 "A"–A2 (TO DWG. I–014)
SC SLOT 3 RTB–9 (TO DWG. I–031–02, I–035–02)	110–TB2–11B WHT/BLU	11	WHT/BLU	110–TB2–11A	CRP 00–A2 (TO DWG. I–033)
SC SLOT 3 RTB–10 (TO DWG. I–031–02, I–035–02)	110–TB2–12B WHT/BLU	12	WHT/BLU	110–TB2–12A	GND. FLT. UNIT 1–A2 (TO DWG. I–055)
SC SLOT 3 RTB–27 (TO DWG. I–031–02, I–035–02)	110–TB2–13B WHT/BLU	13	WHT/BLU	110–TB2–13A	GND. FLT. UNIT 2–A2 (TO DWG. I–056)
SC SLOT 3 RTB–28 (TO DWG. I–031–02, I–035–02)	110–TB2–14B WHT/BLU	14	WHT/BLU	110–TB2–14A	ETHERNET SWITCH –24 VDC (THERMAL CONTROLLER PANEL)
SC SLOT 4 RTB–9 (TO DWG. I–031–03, I–035–03)	110–TB2–15B WHT/BLU	15	WHT/BLU	110–TB2–15A	TB "A" –24 VDC–1 (TO DWG. I–050 OR I–057)
SC SLOT 4 RTB–10 (TO DWG. I–031–03, I–035–03)	110–TB2–16B WHT/BLU	16	WHT/BLU	110–TB2–16A	TB "B" –24 VDC–1 (TO DWG. I–051 OR I–058)
SC SLOT 4 RTB–27 (TO DWG. I–031–03, I–035–03)	110–TB2–17B WHT/BLU	17	WHT/BLU	110–TB2–17A	TB "C" –24 VDC–1 (TO DWG. I–052 OR I–059)
SC SLOT 4 RTB–28 (TO DWG. I–031–03, I–035–03)	110–TB2–18B WHT/BLU	18	WHT/BLU	110–TB2–18A	TB TC SLOT 1–10 (TO DWG. I–011–01)
SC SLOT 5 RTB–9 (TO DWG. I–032–01)	110–TB2–19B WHT/BLU	19	WHT/BLU	110–TB2–19A	TB TC SLOT 2–10 (TO DWG. I–011–01)
SC SLOT 5 RTB–10 (TO DWG. I–032–01)	110–TB2–20B WHT/BLU	20	WHT/BLU	110–TB2–20A	TB TC SLOT 3–10 (TO DWG. I–011–02)
SC SLOT 5 RTB–19 (TO DWG. I–032–01)	110–TB2–21B WHT/BLU	21	WHT/BLU	110–TB2–21A	TB TC SLOT 4–10 (TO DWG. I–011–02)
SC SLOT 5 RTB–20 (TO DWG. I–032–01)	110–TB2–22B WHT/BLU	22	WHT/BLU	110–TB2–22A	TB TC SLOT 5–10 (TO DWG. I–011–03)
SC SLOT 6 RTB–9 (TO DWG. I–032–01)	110–TB2–23B WHT/BLU	23	WHT/BLU	110–TB2–23A	TB TC SLOT 6–10 (TO DWG. I–011–03)
SC SLOT 6 RTB–10 (TO DWG. I–032–01)	110–TB2–24B WHT/BLU	24	WHT/BLU	110–TB2–24A	TB TC SLOT 8–19 (TO DWG. I–014)
SC SLOT 6 RTB–19 (TO DWG. I–032–01)	110–TB2–25B WHT/BLU	25	WHT/BLU	110–TB2–25A	SC SLOT 8 RTB–9 (TO DWG. I–033)
SC SLOT 6 RTB–20 (TO DWG. I–032–01)	110–TB2–26B WHT/BLU	26	WHT/BLU	110–TB2–26A	SC SLOT 8 RTB–19 (TO DWG. I–033)
SC SLOT 7 RTB–9 (TO DWG. I–032–02)	110–TB2–27B WHT/BLU	27	WHT/BLU	110–TB2–27A	SC SLOT 9 RTB–9 (TO DWG. I–033)
SC SLOT 7 RTB–10 (TO DWG. I–032–02)	110–TB2–28B WHT/BLU	28	WHT/BLU	110–TB2–28A	SC SLOT 9 RTB–19 (TO DWG. I–033)
SC SLOT 7 RTB–19 (TO DWG. I–032–02)	110–TB2–29B WHT/BLU	29	WHT/BLU	110–TB2–29A	VOLTAGE TRANSMITTERS (TO DWG. I–047)
SC SLOT 7 RTB–20 (TO DWG. I–032–02)	110–TB2–30B WHT/BLU	30	WHT/BLU	110–TB2–30A	TB TC SLOT 7–9 (TO DWG. I–012)
CRP 00 & 01 (TO DWG. I–033)	110–TB2–30B–A WHT/BLU				

WILLIAM L. CARPENTER JR. — REGISTERED ENGINEER — COMMERCE — NO. 00022979 — STATE OF TENNESSEE

DEVELOPMENT ONE, INC.
1611 East Fourth Street, Suite 250
Santa Ana, California 92701
J.Bruce Camino, Architect, AIA, NCARB
(714) 689-0298
(714) 648-0197 FAX

DATE	SYM	REVISION	BY	A'PD
10/19/09		100% FINAL DESIGN		

NATIONAL AERONAUTICS AND SPACE ADMINISTRATION
DRYDEN FLIGHT RESEARCH CENTER
EDWARDS, CA

DRAWING TITLE
PCC 120VAC & 24VDC POWER DISTRIBUTION DETAILS TYPICAL (SHEET 2)

PROJECT TITLE
REPAIR BUILDING 4820 FLIGHT LOADS LABORATORY POWER CONTROL UPGRADE

APPROVALS	DATE
Chief, Facilities Engineering & Asset Mgmt. Office	6-17-10
Project Manager	5.13.10
Specialty Office	5/20/10
Project Engineer	5-22-10
Safety Office	6-7-10
Telecom	5/14/10

DRAWN BY	M. HENNIGH	DATE STRTD	09/17/08
W.O. #	95099	DATE PRNTD	04/26/10
PLOT SCALE		TRADE SH. No.	I–110–02
CAD FILE NAME			SHEET No. 119 of 125

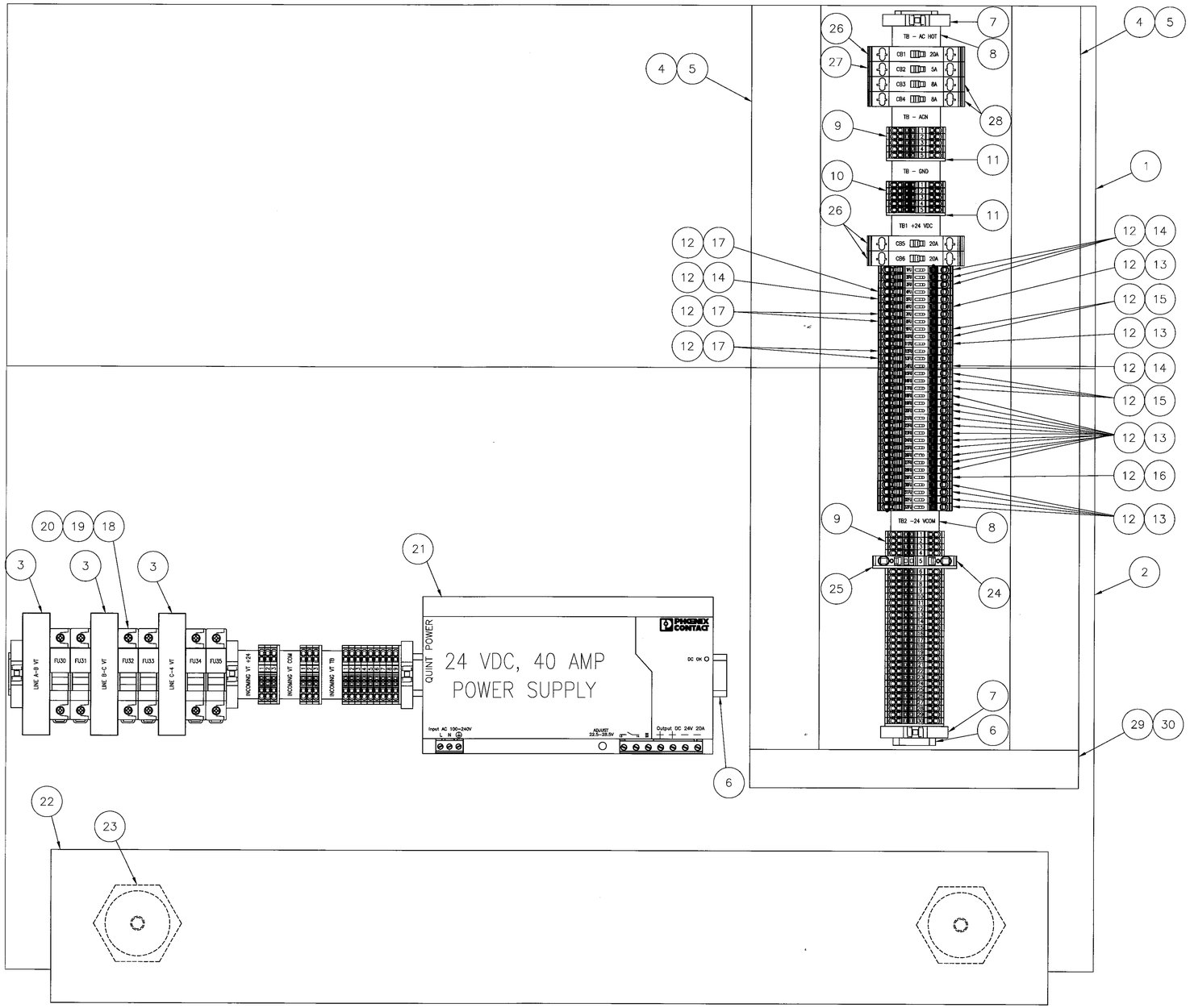

ITEM	QTY	DESCRIPTION	MANUFACTURER	PART NUMBER
1	14	PANEL, 900 MM X 300 MM	RITTAL	TS 8614.040
2	14	PANEL, 900 MM X 500 MM	RITTAL	TS 8614.060
3	42	VOLTAGE TRANSMITTER	LAUREL ELECTRONICS	LTA210RMV5
4	A/R	2 X 4 WIREWAY	PANDUIT	G2X4WH6
5	A/R	WIREWAY COVER, 2.25" WIDE	PANDUIT	C2WH6
6	A/R	DIN RAIL, HIGH-RISE NS 35/15 2000MM	PHOENIX CONTACT	1201730
7	84	END BRACKET, SNAP-ON, CLIPFIX 35	PHOENIX CONTACT	3022218
8	112	MARKER, TERMINAL STRIP UBE/D	PHOENIX CONTACT	0800307
9	490	TERMINAL BLOCK, SPRING CAGE ST 2.5	PHOENIX CONTACT	3031212
10	70	GROUNDING TERMINAL BLOCK, SPRING CAGE ST 2.5-PE	PHOENIX CONTACT	3031238
11	42	END BARRIER FOR ITEM 9 D-ST 2.5	PHOENIX CONTACT	3030417
12	450	FUSE TERMINAL BLOCK WITH LED INDICATION ST 4-HESILED 24 (5X20)	PHOENIX CONTACT	3036547
13	236	0.5 AMP GLASS FUSE	FERRAZ-SHAWMUT	GSB1/2
14	70	1 AMP GLASS FUSE	FERRAZ-SHAWMUT	GSB1
15	70	2 AMP GLASS FUSE	FERRAZ-SHAWMUT	GSB2
16	14	4 AMP GLASS FUSE	FERRAZ-SHAWMUT	GSB4
17	70	6.3 AMP GLASS FUSE	FERRAZ-SHAWMUT	GSB6-3/10
18	42	TWO POLE FUSE HOLDER	FERRAZ-SHAWMUT	USM2I
19	42	TWO POLE FUSE HOLDER PIN-TIE	FERRAZ-SHAWMUT	USPTH2
20	96	FUSE	FERRAZ-SHAWMUT	ATQ1/10
21	14	24 VDC 40A POWER SUPPLY QUINT-PS-100-240AC/24DC/40	PHOENIX CONTACT	2938879
22	14	1/2" X 5" BUS BAR	STORM COPPER	N/A
23	28	BUS BAR STAND-OFF	ERICO FLEXIBAR	559683
24	14	TERMINAL BLOCK, SPRING CAGE ST 6	PHOENIX CONTACT	3031487
25	14	END BARRIER FOR ITEM 24 D-ST 6	PHOENIX CONTACT	3030433
26	42	20 AMP CIRCUIT BREAKER (TMC1M110020.0A)	PHOENIX CONTACT	5650413
27	14	5 AMP CIRCUIT BREAKER (TMC1M11005.0A)	PHOENIX CONTACT	5530931
28	28	8 AMP CIRCUIT BREAKER (TMC1M11008.0A)	PHOENIX CONTACT	5530137
29	A/R	1 X 4 WIREWAY	PANDUIT	G1X4WH6
30	A/R	WIREWAY COVER, 1.25" WIDE	PANDUIT	C1WH6

NOTE:

1. THERE WILL BE 14 OF THESE ASSEMBLIES AND THE TOTAL QUANTITIES ARE SHOWN.

WILLIAM L. CARPENTER
REGISTERED ENGINEER
COMMITMENT
No. 0002279
STATE OF TENNESSEE

DEVELOPMENT ONE, INC.
1611 East Fourth Street, Suite 250
Santa Ana, California 92701
J.Bruce Camino, Architect, AIA, NCARB
(714) 689-0298
(714) 648-0197 FAX

DATE	SYM	REVISION	BY	A'PD
10/19/09		100% FINAL DESIGN		

NATIONAL AERONAUTICS AND SPACE ADMINISTRATION
DRYDEN FLIGHT RESEARCH CENTER
EDWARDS, CA

DRAWING TITLE
PCC 120VAC & 24VDC
POWER DISTRIBUTION PANEL
LAYOUT – TYPICAL

PROJECT TITLE
REPAIR BUILDING 4820 FLIGHT LOADS LABORATORY
POWER CONTROL UPGRADE

APPROVALS	DATE
Chief, Facilities Engineering & Asset Mgmt. Office	6-17-10
Project Manager	5.13.10
Security Office	5/27/10
Project Engineer	5-27-10
Safety Office	6-7-10
Telecom	5/26/10

DRAWN BY	M. HENNIGH	DATE STRTD	09/17/08
W.O. #	95099	DATE PRNTD	04/26/10
PLOT SCALE		TRADE SH. No.	I-111
CAD FILE NAME		SHEET No.	120 of 125

THERMAL CONTROLLER SWING-OUT PANEL BOM				
ITEM	QTY	PART DESCRIPTION	MANUFACTURER	PART NUMBER
1	14	LED BLINKING LIGHT – RED	WERMA	843.110.55
2	14	LED PERMANENT LIGHT – GREEN	WERMA	843.200.55
3	14	LED PERMANENT LIGHT – CLEAR	WERMA	843.400.55
4	14	TERMINAL ELEMENT FOR BASE/BRACKET MOUNTING	WERMA	840.080.00
5	14	MOUNTING BASE WITH INTEGRATED TUBE	WERMA	975.840.10

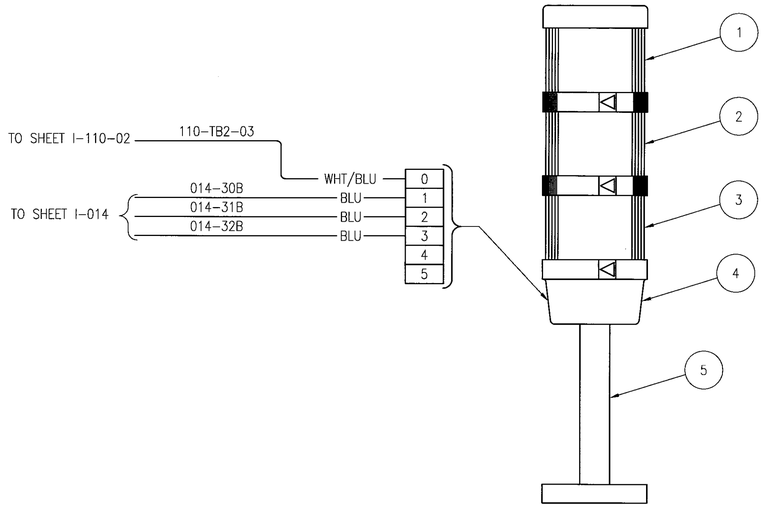

HMI ENCLOSURE STACK LIGHT DETAIL
SCALE: N.T.S

WILLIAM L. CARPENTER JR. REGISTERED ENGINEER STATE OF TENNESSEE No. 00022978

DEVELOPMENT ONE, INC.
1611 East Fourth Street, Suite 250
Santa Ana, California 92701
J.Bruce Camino, Architect, AIA, NCARB
(714) 689-0298
(714) 648-0197 FAX

DATE	SYM	REVISION	BY	A'PD
10/19/09		100% FINAL DESIGN		

NATIONAL AERONAUTICS AND SPACE ADMINISTRATION
DRYDEN FLIGHT RESEARCH CENTER
EDWARDS, CA

DRAWING TITLE
PCC STACK LIGHT
WIRING – TYPICAL

PROJECT TITLE
REPAIR BUILDING 4820 FLIGHT LOADS LABORATORY
POWER CONTROL UPGRADE

APPROVALS	DATE
Chief, Facilities Engineering & Asset Mgmt. Office	6-17-10
Project Manager	5.13.10
Security Office	5/25/10
Project Requestor	5-22-10
Safety Office	6-1-10
Telecom	5/26/10

DRAWN BY	M. HENNIGH	DATE STRTD	09/17/08
W.O. #	95099	DATE PRNTD	04/26/10
PLOT SCALE	TRADE SHL No.	I-120	
CAD FILE NAME		SHEET No. 121 of 125	

PIPING AND INSTRUMENTATION SYMBOLS

VALVE, HAND OPERATED

M
VALVE, MOTOR OPERATED

S
VALVE, SOLENOID OPERATED

VALVE, GAS OPERATED

HL
VALVE, HAND REGULATOR

VALVE, (TEMP, PRESS OR FLOW) CONTROL

VALVE, PRESSURE REDUCING/REGULATING

VALVE, PRESSURE REGULATING

VALVE, 3-WAY

VALVE, 4-WAY

VALVE, FLOAT OPERATED

VALVE, CHECK

VALVE, TRIPLE DUTY

VALVE, RELIEF (ANGLE)

VALVE, RELIEF (IN-LINE)

VALVE, BLOCK & BLEED

BACKFLOW PREVENTER

TRAP

FILTER

STRAINER

STRAINER W/ BLEED

EXPANSION JOINT (BELLOWS)

ORIFICE PLATE

ACCUMULATOR, BLADDER

SILENCER

SIGHT (LEVEL) GAGE

PUMP, COMPRESSOR OR BLOWER

FLANGE CONNECTION

UNION

RUPTURE DISC

FLEXIBLE HOSE

REDUCER

QUICK DISCONNECT COUPLING

FS
FLOW SWITCH

FI
FLOW INDICATOR

FM
FLOW METER

FLOW STRAIGHTENER

VENTURI FLOW METER

SPRAY NOZZLE

VACUUM BREAKER

FLOW DIRECTION

P
PURGE CONNECTION

PIPE CAP

FLOOR DRAIN

-X- DWG NO.
STREAM ENTERING OR LEAVING SHEET

ELECTRIC PROCESS HEATER

GAS, OIL FIRED HEATER

ATMOSPHERIC INTAKE, FILTER, SILENCER

CYCLONE SEPARATOR, DEMISTER

EJECTOR

TURBINE

PRESSURE VESSEL, TANK

FLOATING ROOF TANK

ATMOSPHERIC TANK

DESICCANT DRYER

COOLING TOWER

FILTER, REGULATOR, LUBRICATOR

CONDENSOR

HEAT EXCHANGER

SHELL & TUBE HEAT EXCHANGER

VAPORIZER/EVAPORATOR

3"
INSULATED PIPE

VACUUM JACKETED PIPE

PIPING & INSTRUMENTATION DIAGRAM LEGEND

TE 102
DISCRETE DEVICES

XXX XXX
COMPUTER FUNCTION

XXX 1
SHARED DISPLAY, SHARED CONTROL

XX 1
PROGRAMMABLE LOGIC CONTROL

1
UNDEFINED COMPLEX LOGIC OR SEQUENCE CONTROL

V 1
COMPUTATION/SIGNAL CONDITIONING

INSTRUMENT SYMBOL LOCATION LEGEND

*	ADD DEVICE IDENTIFIERS AND NUMBERS (SEE ISA STANDARDS FOR MORE INFO.)
X / XXX	NO LINE= FIELD MOUNTED LOCATION NORMALLY INACCESSIBLE TO OPERATOR
X / XXX	SINGLE LINE= PRIMARY LOCATION (LOCAL CONTROL ROOM) NORMALLY ACCESSIBLE TO OPERATOR
X / XXX	DOUBLE LINE= AUXILIARY LOCATION (CENTRAL CONTROL ROOM) NORMALLY ACCESSIBLE TO OPERATOR
X / XXX	DASHED LINE= BEHIND-THE-PANEL DEVICES OR FUNCTIONS NORMALLY INACCESSIBLE TO THE OPERATOR

PROCESS LINE
MECHANICAL LINK
HYDRAULIC LINE
INSTRUMENT LINE ELECTRICAL SIGNAL
COMMUNICATION OR DATA LINK
EQUIPMENT BOUNDARIES
EXISTING LINES AND EQUIPMENT
PNEUMATIC LINE

SYSTEM IDENTIFIERS

IDENTIFIER	DESCRIPTION	ALLOCATED NUMBERS
A	AIR (PROCESS)	XXX-XXX
GN2	GASEOUS NITROGEN	XXX-XXX
FP	FIRE PROTECTION WATER	XXX-XXX
CA	COMPRESSED AIR	XXX-XXX
CH	CHILLED WATER	XXX-XXX
F	FUEL	XXX-XXX
HY	HYDRAULIC	XXX-XXX
GL	GLYCOL	XXX-XXX
LO	LUBE OIL	XXX-XXX
CO2	CARBON DIOXIDE	XXX-XXX
DW	DEMINERALIZED WATER	000-100

NOTES:

1. ALL SYMBOLS & IDENTIFIERS SHOWN ON THIS SHEET MAY OR MAY NOT BE USED IN THIS DRAWING PACKAGE.

DEVICE IDENTIFIERS

IDENTIFIER	DESCRIPTION
ACC	ACCUMULATOR
BBV	BLOCK & BLEED VALVE
C	COMPRESSOR
CH	CHILLER
CND	CONDENSOR
COTR	CONTRACTING OFFICERS TECHNICAL REPRESENTATIVE
CPU	CENTRAL PROCESSING UNIT
CV	CHECK VALVE
CT	COOLING TOWER
D	DRYER
DPE	DIFFERENTIAL PRESSURE ELEMENT
DPG	DIFFERENTIAL PRESSURE GAGE
DPS	DIFFERENTIAL PRESSURE SWITCH
DW	DEM
EE	VOLTAGE SENSOR/ELEMENT
EI	VOLTAGE INDICATOR
EJ	EXPANSION JOINT
EJT	EJECTOR
ET	VOLTAGE TRANSMITTER
F	FILTER
FCV	FLOW CONTROL VALVE
FE	FLOW ELEMENT
FH	FLEX HOSE
FI	FLOW INDICATOR
FM	FLOW METER
FRL	FILTER, REGULATOR, LUBRICATOR
FS	FLOW SWITCH
FST	FLOW STRAIGHTENER
FT	FLOW TRANSMITTER
FV	FLOAT OPERATED VALVE
FY	FLOW COMPUTER
FYC	FLOW CONTROLLER
GV	GAS OPERATED VALVE
H	HEATER
HL	HAND LOADER (REGULATOR)
HLA	HIGH LEVEL ALARM
HX	HEAT EXCHANGER
IC	INSTRUMENT CONNECTION
IE	CURRENT SENSOR/ELEMENT
I	CURRENT INDICATOR
I/P	CURRENT TO PRESSURE CONVERTER
IT	CURRENT TRANSMITTER
JI	POWER (KW) INDICATOR
JKT	POWER USE (KWHR) TRANSMITTER
JTI	POWER USE (KWHR) INDICATOR
LS	LEVEL SWITCH
JT	POWER TRANSMITTER
LCV	LEVEL CONTROL VALVE
LLA	LOW LEVEL ALARM
ME	MOISTURE ELEMENT
MOV	MOTOR OPERATED VALVE
NA	GRAPHICAL DISPLAY/ANNUNCIATOR
NC	NORMALLY CLOSED
NO	NORMALLY OPEN
OP	ORIFICE PLATE
P	PUMP
PC	PRESSURE CONTROLLER
PCV	PRESSURE CONTROL VALVE
PDT	DIFFERENTIAL PRESSURE TRANSMITTER
PE	PRESSURE ELEMENTS
PG	PRESSURE GAGE
PI	PRESSURE INDICATOR
PIC	PRESSURE INDICATOR/CONTROLLER
PRV	PRESSURE REGULATING VALVE
PS	PRESSURE SWITCH
PT	PRESSURE TRANSMITTER
PWR	POWER SUPPLY
QD	QUICK DISCONNECT
RD	RUPTURE DISC
RV	RELIEF VALVE
SEP	SEPARATOR
SG	SIGHT GAGE
SL	SILENCER
SN	SPRAY NOZZLE
SOV	SOLENOID OPERATED VALVE
SP	SPRINKLER
SPV	SURGE PREVENTION VALVE
SSV	SAFETY SHUT-OFF VALVE
ST	STRAINER
SV	SERVO VALVE
SVK	SERVO AMPLIFIER
T	TANK
TC	TEMPERATURE CONTROLLER
TCV	TEMPERATURE CONTROL VALVE
TDV	TRIPLE DUTY VALVE
TE	TEMPERATURE ELEMENT
TEX	EXPANSION TURBINE
TG	TEMPERATURE GAGE
TIC	TEMP. INDICATOR/CONTROLLER
TP	TRAP
TS	TEMPERATURE SWITCH
TT	TEMPERATURE TRANSMITTER
UJAR	SIGNAL CONDITIONER/MUX (DAS)
UYC	MICROPROCESSOR CONTROLLER
UYK	BACK-UP OR MANUAL CONTROLLER
V	VALVE (HAND OPERATED)
VAP	VAPORIZER/ EVAPORATOR
VBR	VACUUM BREAKER
VE	VIBRATION ELEMENT
VIA	VIBRATION MONITOR
VT	VIBRATION TRANSMITTER
VM	VENTURI FLOW METER
WIC	TORQUE INDICATOR/CONTROLLER
XLH	COMPRESSOR ON INDICATING LIGHT
XLL	COMPRESSOR OFF INDICATING LIGHT
YK	PROGRAMMABLE CONTROLLER REMOTE I/O
ZE	POSITION ELEMENT
ZI	POSITION INDICATOR
ZLH	POSITION OPEN INDICATING LIGHT
ZLL	POSITION CLOSED INDICATING LIGHT
ZS	POSITION SWITCH
ZSH	POSITION LIMIT SWITCH, FULL OPEN
ZSL	POSITION LIMIT SWITCH, FULL CLOSE
X	X

EQUIPMENT DESIGNATOR

V 100
DEVICE IDENTIFIER
ASSIGNED DEVICE NUMBER

LINE IDENTIFIER

DESIGN PRESSURE, PSIG
SYSTEM IDENTIFIER
LINE SIZE, NPS
1 GL 150
FLOW INDICATOR

EUGENE A. TENNYSON
REGISTERED ENGINEER
ACTIVE
No. 020090
STATE OF TENNESSEE

DEVELOPMENT ONE, INC.
1611 East Fourth Street, Suite 250
Santa Ana, California 92701
J. Bruce Camino, Architect, AIA, NCARB
(714) 689-0298
(714) 648-0197 FAX

DATE	SYM	REVISION	BY	A'PD
10/19/09		100% FINAL DESIGN		

NATIONAL AERONAUTICS AND SPACE ADMINISTRATION
DRYDEN FLIGHT RESEARCH CENTER
EDWARDS, CA

DRAWING TITLE
MECHANICAL SYMBOLS & ABBREVIATIONS

PROJECT TITLE
REPAIR BUILDING 4820 FLIGHT LOADS LABORATORY POWER CONTROL UPGRADE

APPROVALS	DATE
Chief Facilities Engineering & Assets Mgmt. Office	6-17-10
Project Manager	5.13.10
Security Office	5/25/10
Project Engineer	5-22-10
Safety Office	6-1-10
Telecom	5/26/10

DRAWN BY	M. HENNIGH	DATE STRTD	09/17/08
W.O. #	95099	DATE PRNTD	04/26/10
PLOT SCALE		TRADE SH. No.	M-001
CAD FILE NAME		SHEET No.	122 of 125

MAIN HEAT EXCHANGER EQUIPMENT LIST

DEVICE NO.	DEVICE DESCRIPTION	REMARKS
CH–001	CHILLER – 65KW, 20% PROPYLENE GLYCOL/80% WATER MIX DELIVERED AT 75°F, 60 GPM, 45 PSI BETWEEN INLET AND OUTLET OF CHILLER PACKAGE, DESIGNED FOR INDOOR INSTALLATION. RATED LOAD AT 114°F DRY BULB AND 68°F WET BULB, 460VAC–3PH–60HZ. CHILLER TO BE AIR COOLED, COMPLETELY SELF CONTAINED, COMPLETE WITH PROCESS WATER PUMP, TANK, TEMPERATURE CONTROL VALVES, REFRIGERANT SAFETY CONTROLS, AND ELECTRIC CONTROL PANEL. DISCHARGE PROCESS WATER SHALL BE TEMPERATURE CONTROLLED AND ADJUSTABLE BETWEEN 45°F AND 80°F. ALL WETTED COMPONENTS ON THE PROCESS WATER SIDE SHALL BE STAINLESS STEEL, COPPER OR BRASS. CHILLER SHALL BE DRY COOLERS INC. PART NUMBER PAC–267 OR EQUAL.	
V–002 V–003	VALVE – ISOLATION 2 ½" FULL–PORT BALL VALVE, BRASS BODY, BRASS BALL, W/LOCKING HANDLE, FNPT END CONNECTIONS, ASSURED AUTOMATION SERIES 282N	
V–004 V–005	VALVE – INSTRUMENT BLOCK AND BLEED ½"MNPT x ½"FNPT, SST BODY, ANDERSON GREENWOOD M/N M9R1S44	
PDT–006	DIFFERENTIAL PRESSURE TRANSMITTER – RANGE 0–50 PSID, STAINLESS STEEL WETTED PARTS 4–20 mA OUTPUTS, 1/8" NPTF PORTS OMEGA P/N PX273–050DI	
PRV–007	VALVE – PRESSURE REGULATING, 2" FULL–PORT GLOBE VALVE, BRONZE BODY, ANSI 150# FLANGES, RANGE: 10 – 40 PSID, CLA–VAL M/N 250–01	
FS–08 THRU FS–21	FLOW SWITCH, DRY CONTACT SPDT, BRASS BODY, 1" MNPT CONNECTIONS MCDONNELL & MILLER FS5–1	
T–022	EXPANSION TANK – 9 GALLON, ANSI–NSF 61 CERTIFIED, POWDER COATED STEEL W/BUTYL RUBBER DIAPHRAGM, 1" FNPT CONNECTION, McMASTER–CARR CAT.#4386T4	
V–023 V–026 V–027	VALVE – ISOLATION, 1" FULL–PORT BALL VALVE, BRASS BODY, BRASS BALL, W/LOCKING HANDLE, 1" FNPT CONNECTIONS, ASSURED AUTOMATION SERIES 282N	
ST–024	STRAINER – 2" LINE BRONZE Y–STRAINER, WITH 40 MESH STAINLESS STEEL STRAINER ELEMENT, 2" FNPT END CONNECTIONS, MCMASTER–CARR P/N 4547K38	
RV–025	RELIEF VALVE – 1" PRESSURE RELIEF VALVE – SET PRESSURE 75 PSI BRASS 1" NPTM INLET – 1" NPTF OUTLET McMASTER CARR 4780K13	

NOTES:

1. FOR MECHANICAL SYMBOLS AND ABBREVIATIONS, SEE DRAWING M–001.
2. ALL PIPING SHALL BE ASTM TYPE M COPPER TUBE UNLESS OTHERWISE NOTED.
3. PRESSURE TEST ENTIRE GLYCOL/WATER SYSTEM AS FOLLOWS USING CLEAN WATER:
   a. REMOVE OR ISOLATE CH–001 AND T–002 PRIOR TO PRESSURE TEST. UPON SUCCESSFUL FOR PRESSURE TEST, INSTALL THESE COMPONENTS.
   b. APPLY 75 PSIG TO ENTIRE SYSTEM. EXCEPT AS NOTED IN 3a
   c. ISOLATE ENTIRE SYSTEM AND VERIFY ZERO LOSS IN PRESSURE AFTER 30 MINUTES.
   c. VISUALLY INSPECT ALL CONNECTIONS AT EACH PCC CABINET AND VERIFY ZERO LEAKS AND ZERO WET SPOTS IN ALL CABINETS.
   e. REPAIR ANY LEAKS AND REPEAT FULL LEAK TEST UNTIL NO LEAKS ARE DETECTED.
   f. ALL LEAK TESTING SHALL BE WITNESSED BY THE NASA COTR.
4. INITIAL CHILLER DISCHARGE TEMPERATURE TO BE SET AT 75°F.
5. TURN RELIEF VALVE OUTLET DOWN.
6. FILL PROCEDURE; FILL WITH 20% PROPYLENE GLYCOL/80% WATER MIX (DOWFROST OR EQUAL) USING V–027. AFTER SYSTEM IS FULL, ISOLATED CHILLER CH–001. BLOCK OPEN PRV–007 AND BACK FILL THRU V–026. BLEED AIR OUT AT EACH PCC USING THE ITEM #15 (SEE SHEET M–003) HIGH POINT BLEED VALVE. AFTER FILL IS COMPLETE AND ALL BLEED VALVES HAVE BEEN PURGED OF AIR, REMOVE BLOCK FROM PRV–007 AND CLOSE V–026. OPERATE SYSTEM PUMP, CIRCULATING THROUGH COMPLETE SYSTEM FOR 8 HOURS. WHILE OPERATING SYSTEM PUMP VERIFY NO AIR IN SYSTEM AT EACH #15 BLEED VALVE IN EACH PCC. AFTER ALL AIR IS PURGED, INSTALL CAP #16 ON EACH #15 BLEED VALVE. VERIFY LEAK FREE DURING SYSTEM PRESSURE TEST.

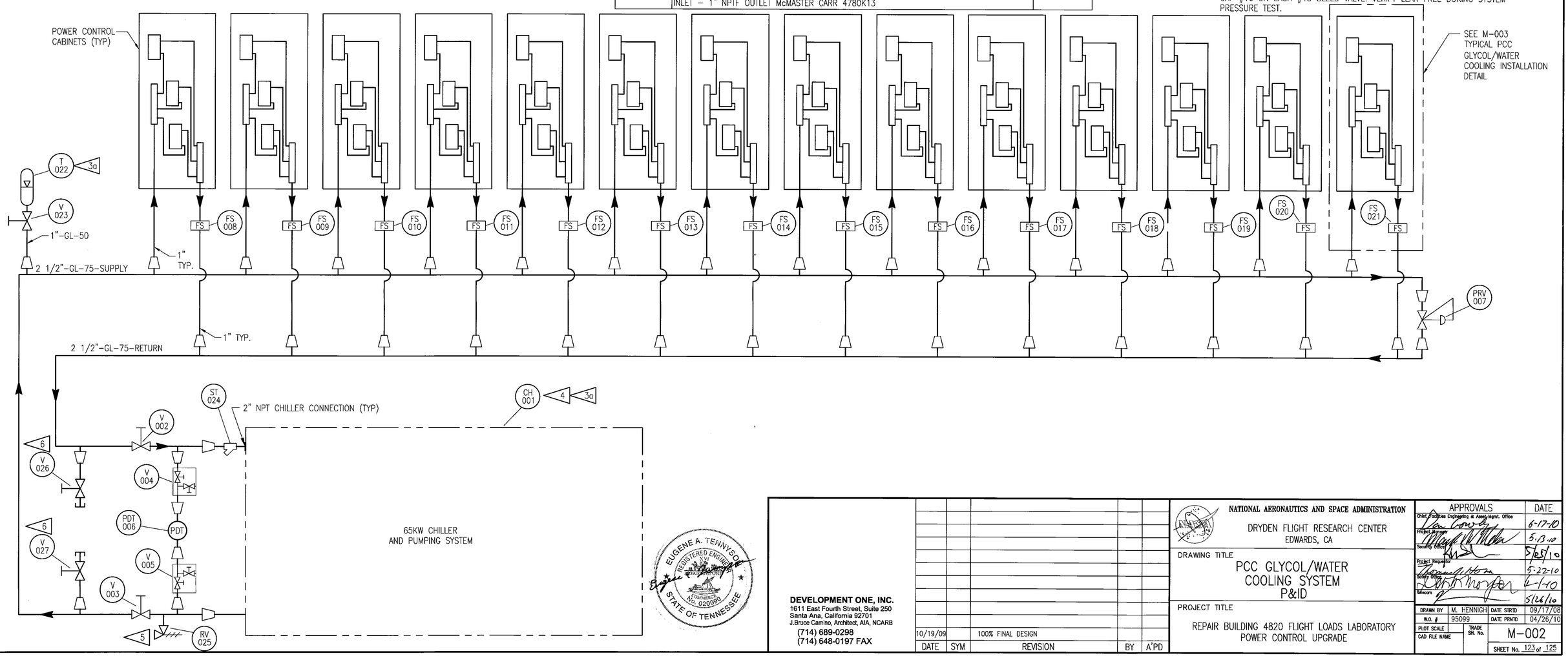

EUGENE A. TENNYSON
REGISTERED ENGINEER
No. 020090
STATE OF TENNESSEE

DEVELOPMENT ONE, INC.
1611 East Fourth Street, Suite 250
Santa Ana, California 92701
J.Bruce Camino, Architect, AIA, NCARB
(714) 689-0298
(714) 648-0197 FAX

DATE	SYM	REVISION	BY	A'PD
10/19/09		100% FINAL DESIGN		

NATIONAL AERONAUTICS AND SPACE ADMINISTRATION
DRYDEN FLIGHT RESEARCH CENTER
EDWARDS, CA

DRAWING TITLE
PCC GLYCOL/WATER COOLING SYSTEM P&ID

PROJECT TITLE
REPAIR BUILDING 4820 FLIGHT LOADS LABORATORY POWER CONTROL UPGRADE

APPROVALS	DATE
Chief, Facilities Engineering & Assets Mgmt. Office	6-17-10
Project Manager	5-13-10
Security Officer	5/25/10
Project Requestor	5-22-10
Safety Officer	6-1-10
Telecom	5/26/10

DRAWN BY	M. HENNIGH	DATE STRTD	09/17/08
W.O. #	95099	DATE PRNTD	04/26/10
PLOT SCALE		TRADE SH. No.	M–002
CAD FILE NAME			SHEET No. 123 of 125

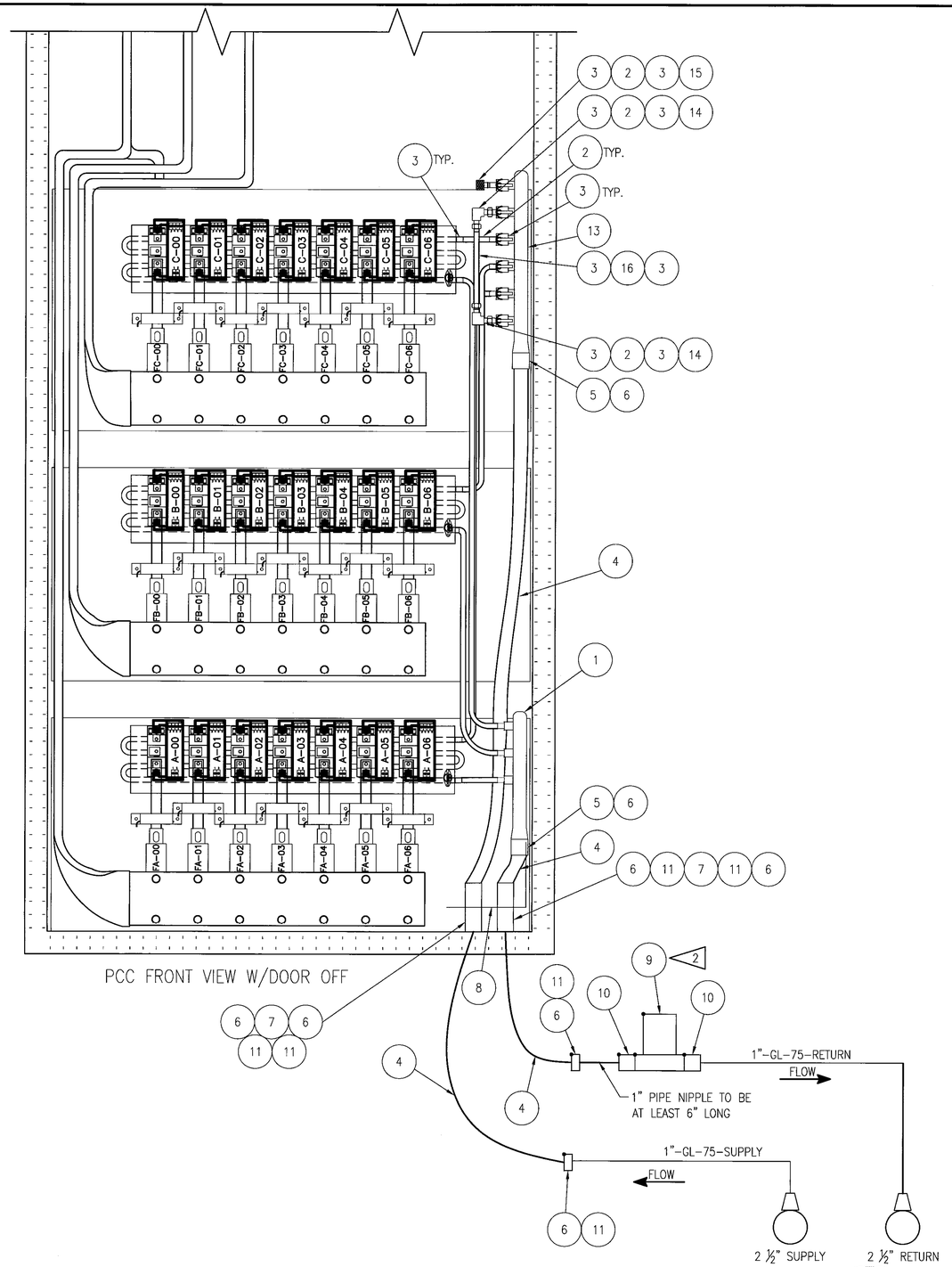

TYPICAL PCC GLYCOL/WATER COOLING INSTALLATION
REQUIRED 14 PLACES

BILL OF MATERIAL

ITEM	QTY	DESCRIPTION	MANUFACTURER	PART NUMBER
1	14	1" IN X 3 – 3/8" OUT, 3 BRANCH COPPER MANIFOLD	WATTS	WPMCM1–M3–06
2	A/R	FORTRESS 1000 – 3/8" HOT WATER HOSE	GOODYEAR – GRAINGER	79219317
3	256	3/8" SS HOSE RING CLAMPS	GRAINGER	1A528
4	A/R	FORTRESS 300 – 1" HOT WATER HOSE	GOODYEAR – GRAINGER	79219390
5	28	1" MALE SWEAT TO 1" BARB BRASS ADAPTER	WATTS	WP10B–1616PB
6	112	1" SS HOSE RING CLAMPS	GRAINGER	1XHC2
7	28	1" BULKHEAD FITTING	NIBCO	750–1
8	14	L BRACKET, 2 – 1" HOLES GALV. STEEL	WATTS	WPSB–2E
9	14	LIQUID FLOW SWITCH	MCDONNELL & MILLER	FS5–1
10	28	1" BRASS BARB TO 1" NPT – MALE ADAPTER	WATTS	WP12B–1616–PB
11	84	1" FEMALE SWEAT TO 1" BARB BRASS ADAPTER	WATTS	WP11B–1616PB
12	42	HEAT EXCHANGER: AAV10 THERMALLOY	AABID THERMALLLOGIC	41660LVOOOOO6–M00 24"
13	14	1"x6–3/8" BRANCH MAINFOLD W/SHUT–OFF VALVES, 3/8" BARBED BRANCH CONNECTIONS. BRASS	WATTS	WPCM1–M6–06B
14	28	UNION ELBOW – 3/8"x3/8" TUBE – BRASS BARBED	PARKER – GRAINGER	225–6–6 / 2GUG9
15	14	PLUG 3/8" TUBE, BRASS, BARBED	PARKER – GRAINGER	20–6 / 2GUE7
16	A/R	CLEAR POLYETHYLENE TUBING, 0.375 ID	ELDON JAMES – GRAINGER	CFX6–8N / 1PCR8

NOTES:

1. SEE DRAWING M–001 FOR MECHANICAL SYMBOLS AND ABBREVIATIONS.
2. INSTALL FLOW SWITCH (ITEM 9) BETWEEN TWO PIPE SUPPORTS.
3. SEE DRAWING M–002 FOR GENERAL NOTES.

DEVELOPMENT ONE, INC.
1611 East Fourth Street, Suite 250
Santa Ana, California 92701
J.Bruce Camino, Architect, AIA, NCARB
(714) 689-0298
(714) 648-0197 FAX

EUGENE A. TENNYSON — REGISTERED ENGINEER — No. 020990 — STATE OF TENNESSEE

DATE	SYM	REVISION	BY	A'PD
10/19/09		100% FINAL DESIGN		

NATIONAL AERONAUTICS AND SPACE ADMINISTRATION
DRYDEN FLIGHT RESEARCH CENTER
EDWARDS, CA

DRAWING TITLE
PCC HEAT SINK CONNECTION DETAILS

PROJECT TITLE
REPAIR BUILDING 4820 FLIGHT LOADS LABORATORY POWER CONTROL UPGRADE

APPROVALS	DATE
Chief, Facilities Engineering & Asset Mgmt. Office	6-17-10
Project Manager	5-13-10
Security Office	5/25/10
Project Inspector	6-22-10
Safety Office	6-7-10
Telecom	5/26/10

DRAWN BY	M. HENNIGH	DATE STRTD	09/17/08
W.O. #	95099	DATE PRNTD	04/26/10
PLOT SCALE		TRADE SH. No.	M–003
CAD FILE NAME			SHEET No. 124 of 125

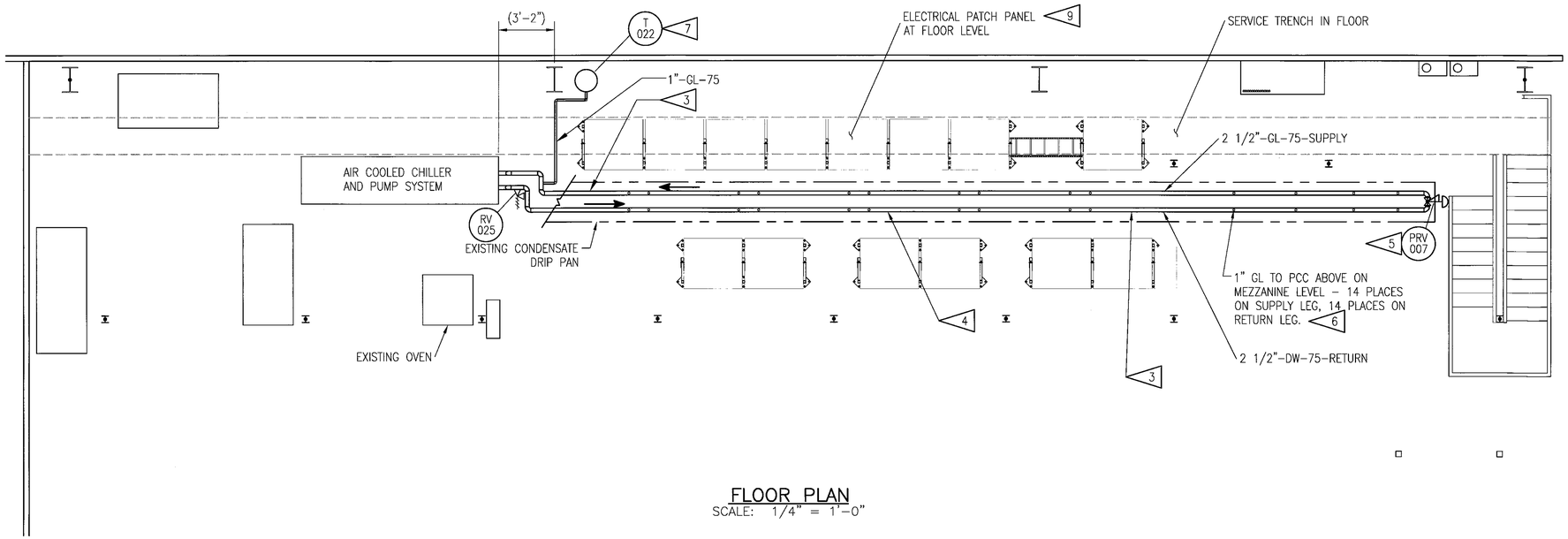

FLOOR PLAN
SCALE: 1/4" = 1'-0"

NOTES:

1. SEE DRAWING M-001 FOR MECHANICAL SYMBOLS AND ABBREVIATIONS.
2. SEE DRAWING D-003 FOR DEMOLITION DETAILS.
3. FIELD ROUTE 2 ½" GLYCOL/WATER SUPPLY AND RETURN HEADERS FROM CHILLER INTO EXISTING CONDENSATE DRIP PAN. UTILIZE EXISTING PENETRATIONS IN DRIP PAN.
4. REUSE EXISTING PIPE SUPPORTS WHEREVER PRACTICAL.
5. INSTALL PRESSURE REGULATING VALVE PRV-007 AT THE END OF THE 2 ½" LINE BETWEEN SUPPLY AND RETURN HEADERS. INITIAL DIFFERENTIAL PRESSURE SETTING TO BE 25 PSID.
6. ALL BRANCH TAKE-OFFS TO THE SCR COOLING LINES TO BE 1" BRONZE BRAZOLETS. ROUTE 1" COPPER BRANCHES TO UNDERSIDE OF NEW SCR POWER CONTROL CABINETS AND INSTALL AS INDICATED ON DRAWING M-003. NEW SCR POWER CONTROL CABINETS ARE MOUNTED ON THE MEZZANINE ABOVE AND ARE INDICATED ON DRAWING E-002. THE FOLLOWING CABINETS REQUIRE ON COOLING: A1, A2, A3, A4, A5, B1, B2, B3, B4, B5, B6, C1, C2 AND C3.
7. LOCATE EXPANSION TANK T-022 ON THE MEZZANINE LEVEL NEAR COLUMN AS SHOWN.
8. INSTALL 1/4" HIGH POINT BLEEDS WITH HAND VALVES, AS REQUIRED THOUGHOUT THE SUPPLY AND RETURN SYSTEM TO ALLOW FOR MANUALLY BLEEDING ALL AIR OUT OF SYSTEM.
9. EXISTING ELECTRICAL PATCH PANELS AT FLOOR LEVEL TO BE RELOCATED BY OTHERS. PATCH PANELS ARE WELL BELOW GL PIPING.

EUGENE A. TENNYSON
REGISTERED ENGINEER
No. 020080
STATE OF TENNESSEE

DEVELOPMENT ONE, INC.
1611 East Fourth Street, Suite 250
Santa Ana, California 92701
J.Bruce Camino, Architect, AIA, NCARB
(714) 689-0298
(714) 648-0197 FAX

DATE	SYM	REVISION	BY	A'PD
10/19/09		100% FINAL DESIGN		

NATIONAL AERONAUTICS AND SPACE ADMINISTRATION
DRYDEN FLIGHT RESEARCH CENTER
EDWARDS, CA

DRAWING TITLE
PCC GLYCOL/WATER COOLING SYSTEM INSTALLATION
PLAN VIEW

PROJECT TITLE
REPAIR BUILDING 4820 FLIGHT LOADS LABORATORY POWER CONTROL UPGRADE

APPROVALS	DATE
Chief, Facilities Engineering & Asset Mgmt. Office	6-17-10
Project Manager	5/13/10
Security Office	6/28/10
Project Requestor	5-22-10
Safety Office	6-1-10
Technical	5/26/10

DRAWN BY	M. HENNIGH	DATE STRTD	09/17/08
W.O. #	95099	DATE PRNTD	04/26/10
PLOT SCALE		TRADE SH. No.	M-004
CAD FILE NAME			

SHEET No. 125 of 125