DWG NO.	SH.	REV
A234A-1000-G1		

PROJECT LOCATION

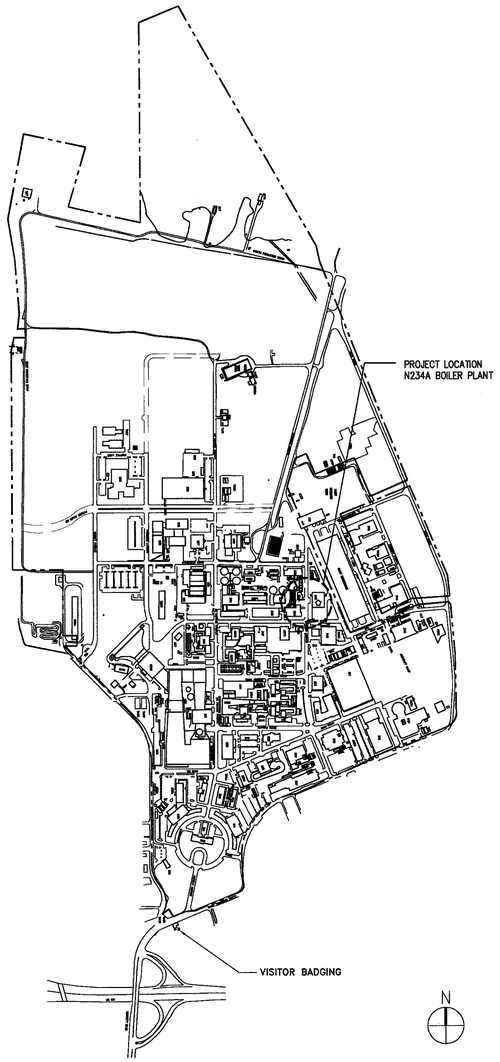

PROJECT TITLE

NATIONAL AERONAUTICS AND SPACE ADMINISTRATION
MOFFETT FEDERAL AIRFIELD, CALIFORNIA

N234A
SVS DEAERATOR/FEEDWATER TANK REPLACEMENT

SCOPE OF WORK

1. DESIGN, FABRICATE, INSTALL AND TEST NEW DEAERATOR AND STRUCTURAL SUPPORT FRAME FOR NEW DEAERATOR ADJACENT TO SOUTH SIDE OF EXISTING BOILER PLANT IN BUILDING 234A. INCLUDE OSHA COMPLIANT PLATFORM, ACCESS LADDERS AND RAILING FOR SERVICE ACCESS. SUBMIT AND COORDINATE FOUNDATION LOADS WITH NASA COTR. INSTALL DEAERATOR FOUNDATION.
2. FABRICATE, INSTALL AND TEST ASSOCIATED PIPING, PIPE SUPPORTS, AND CONTROLS FOR FULLY OPERATIONAL EXISTING BOILER PLANT. DESIGN ALL MECHANICAL SYSTEMS, EXCEPT BUILD-TO-PRINT PIPING AND SUPPORTS SPECIFICALLY EXCLUDED BY THE DESIGN-BUILD SPECIFICATIONS ON SHEET M2.
3. ALL ADDITIONAL WORK REQUIRED BY CONTRACTOR PROPOSED DEVIATIONS FROM THE BUILD-TO-PRINT WORK SHOWN ON PLANS SHALL BE INSTALLED AT NO ADDITIONAL COST TO THE GOVERNMENT. SEE DESIGN-BUILD SPECIFICATIONS ON SHEET M2 FOR DEFINITION OF BUILD-TO-PRINT WORK.

SITE PLAN

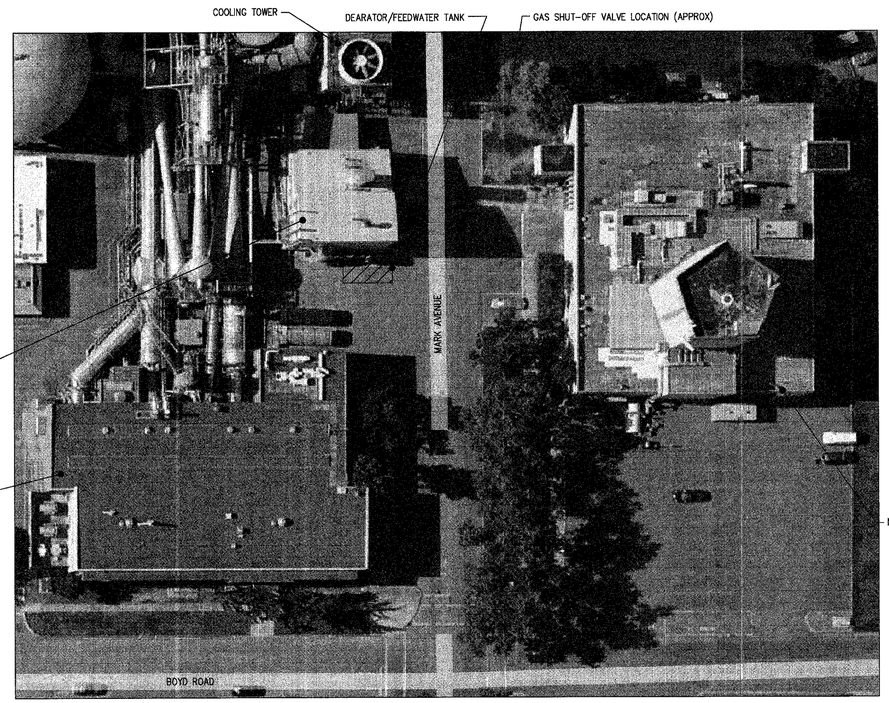

CODES AND REFERENCES

PERFORM ALL WORK IN ACCORDANCE WITH CURRENT EDITION OF THE CODES AND STANDARDS LISTED IN AMES PROCEDURAL REQUIREMENT (APR) 8829.1 INCLUDING, BUT NOT LIMITED TO, THE FOLLOWING:

AMES RESEARCH CENTER HEALTH AND SAFETY MANUAL – APR 1700.1
AMES ENVIRONMENTAL MANAGEMENT HANDBOOK – APG 8800.3
ASME A13.1 STANDARD FOR PIPE IDENTIFICATION – 2007
ASME B31.3 PROCESS PIPING CODE – 2008
ASME BOILER PRESSURE VESSEL CODE (BPVC) SECTION V, VIII & IX – 2007 with 2009b Addenda
CALIFORNIA BUILDING CODE (CBC) – 2007
CALIFORNIA MECHANICAL CODE (CMC) – 2007
CALIFORNIA ELECTRIC CODE (CEC) – 2007
CALIFORNIA PLUMBING CODE (CPC) – 2007
NFPA 54 – NATIONAL FUEL GAS CODE – 2009

STAGING PLAN

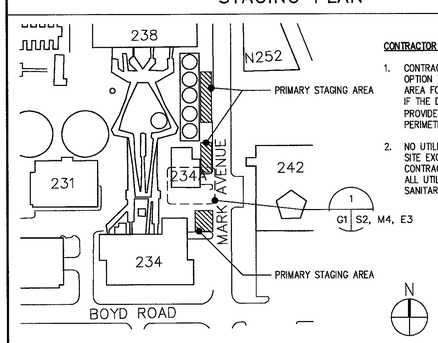

CONTRACTOR STAGING AREA

1. CONTRACTOR MAY ELECT AT HIS OPTION TO UTILIZE THE DESIGNATED AREA FOR FABRICATION OR STORAGE. IF THE DESIGNATED AREA IS UTILIZED, PROVIDE A 6'-0" HIGH TEMPORARY PERIMETER FENCE WITH LOCKED GATE.
2. NO UTILITIES ARE AVAILABLE AT THE SITE EXCEPT ELECTRICITY AND WATER. CONTRACTOR IS RESPONSIBLE FOR ALL UTILITIES SUCH AS TEMPORARY SANITARY, FIRE PROTECTION, ETC.

HEALTH, SAFETY & ENVIRONMENTAL COMPLIANCE

1. PERFORM ALL WORK IN STRICT ACCORDANCE WITH CAL-OSHA, FED-OSHA, CAL-EPA, FED-EPA, SANTA CLARA COUNTY AND BAAQMD (BAY AREA AIR QUALITY MANAGEMENT DISTRICT) REQUIREMENTS, RWQCB (REGIONAL WATER QUALITY CONTROL BOARD), AND THE SWPPP (STORM WATER POLLUTION PREVENTION PLAN).
2. FOR ALL WORK ON PROPERTY OF NASA AMES RESEARCH CENTER, COMPLY WITH NASA AMES HEALTH AND SAFETY MANUAL (APR 1700.1) AND NASA AMES ENVIRONMENTAL MANAGEMENT HANDBOOK (APR 8800.3). FOLLOW REQUIREMENTS FOR CONSTRUCTION SAFETY (CHAPTER 27), AND ALL OTHER APPLICABLE CHAPTERS. BOTH MANUALS ARE AVAILABLE ON-LINE:
   (http://server-mpo.arc.nasa.gov/services/proc/procdocs/apg1700.1-r/redactedhealthmanual.html)
   (http://server-mpo.arc.nasa.gov/services/proc/procdocs/apg8800.3-r/redactedenvironmentalmanual.html)
3. CONDUCT ELECTRICAL WORK PER NFPA 70E, STANDARDS FOR ELECTRICAL SAFETY IN THE WORKPLACE.
4. UPDATE ELECTRICAL PANEL SCHEDULES TO REFLECT ALL CHANGES TO THE SYSTEM.
5. PROVIDE TRAFFIC CONTROL PER MANUAL ON UNIFORM TRAFFIC CONTROL DEVICES (MUTCD) 2003 EDITION, AND REVISIONS 1 AND 2 DATED 12/2007. (http://mutcd.fhwa.dot.gov/kno 2003r1r2.htm)
6. SUBMIT FALL PROTECTION PLAN, DEMOLITION PLAN, MATERIAL LIFTING PLAN, AND EXCAVATION PLAN PER ASCS SECTION 01100. SUBMIT PLANS TO COTR, WHO SHALL SUBMIT TO NASA AMES SAFETY OFFICE.
7. ONLY TRAINED AND AUTHORIZED PERSONS MAY ENTER CONFINED SPACES.
8. OBTAIN HOT WORK PERMIT PER APR 1700.1 CHAPTER 20 AND 27, PRIOR TO START OF HOT WORK (WELDING, CUTTING, BRAZING).
9. MINIMIZE NOISE LEVELS AT ALL TIMES. IDENTIFY TIMES OF HIGH NOISE LEVEL IN WORK PLAN.
10. ADHERE TO NASA AMES ASBESTOS & LEAD MANAGEMENT PLANS, AND FEDERAL, STATE, AND LOCAL REQUIREMENTS FOR REMOVAL AND DISPOSAL OF THE MATERIALS CONTAINING ASBESTOS OR LEAD. ALL SUSPECTED ITEMS OF WORK SHALL BE ASSUMED TO CONTAIN ASBESTOS OR LEAD UNLESS SAMPLING INDICATED OTHERWISE. SEE SPECIFICATION SECTIONS 02080 AND 02090. TEST REPORT OF LIMITED SAMPLING CONDUCTED BY NASA AMES CODE QH, INDICATE:
    MATERIALS TESTED POSITIVE FOR ASBESTOS INCLUDE: EXISTING PIPING INSULATION.
    MATERIALS TESTED POSITIVE FOR LEAD INCLUDE: PAINT ON EXISTING STRUCTURAL STEEL.
11. CONTAIN WATER FROM CONCRETE REMOVAL OR INSTALLATION OPERATIONS, AND DISPOSE OFF SITE. DISCHARGE TO THE STORM DRAIN SYSTEM IS NOT ALLOWED. FOLLOW BEST MANAGEMENT PRACTICE AS REQUIRED IN THE NASA ARC INDUSTRIAL PERMIT FOR STORM WATER DISCHARGES (CAS000001).
12. NOTIFY COTR PRIOR TO ANY PLANNED DISCHARGE OF POTABLE WATER TO THE STORM DRAIN SYSTEM PER THE STORM WATER INDUSTRIAL PERMIT. INFORM COTR OF THE DATE, TIME, AMOUNT AND NATURE OF THE DISCHARGE. (CAS000001)
13. IF SOIL CONTAMINATION IS ENCOUNTERED, CONTACT CODE JC BY CALLING DON CHUCK (604-0237) OR JOE LUKAS (604-2057). THERE IS NO KNOWN SOIL CONTAMINATION IN THIS AREA. ON SITES LOCATED ADJACENT TO REGIONAL GROUND WATER PLUME, SHALLOW SOIL EXCAVATIONS (LESS THAN 3 FEET) SHOULD NOT ENCOUNTER CONTAMINATED GROUNDWATER. IF EXCAVATING DEEPER THAN 3 FEET BELOW GROUND SURFACE, CONTACT AMES ENVIRONMENTAL DIVISION.

REGISTERED PROFESSIONAL ENGINEER
MICHAEL S. CALLAHAN
M 21188
MECHANICAL
STATE OF CALIFORNIA
Exp. 6/30/11

Approved for Construction
Moffett Field Permit Board

Chief Building Official
Permit No. 10P003

ZONE	LETTER	DESCRIPTION	DRAWN	DATE	APPRVD
		REVISIONS			

		DATE
DRAWN	J.HO	4/12/2010
DESIGNED	M.CALLAHAN	4/12/10
CHECKED	P.WAN	4/12/10
PROJMGR	M.CALLAHAN	4/12/10
REQUESTER	J.BALDOVINO	4/12/2010
USER	J.BALBONI	4/12/10
SAFETY	D.FRASER	4/19/10
SUPERVISOR	S.FRANKEL	4/14/10

Ames Research Center
Moffett Field, California

N234A SVS DEAERATOR/FEEDWATER TANK REPLACEMENT
GENERAL

TITLE SHEET

SIZE	CAGE CODE	REV
D	25307	A
SCALE	AS NOTED	INDEX / SHEET / OF

A234A-1000-G1

FILE NAME: 234A-G01 04-12-2010

DWG: R:\234A\60046725.0001 (K80056) Feed Water Deaerator\300_CAD\FEEDWATER\G\Sheet\234A-G01.dwg Version: 17.1s (LMS Tech) User: jjho
DATE: Apr 12, 2010 - 8:57:07 am

DWG NO.	SH.	REV
A234A-1000-G2		

DRAWING INDEX

GENERAL

A234A-1000-G1	TITLE SHEET
A234A-1000-G2	DRAWING AND SPECIFICATION INDEX

STRUCTURAL

A234A-1000-S1	STRUCTURAL NOTES, SYMBOLS, AND ABBREVIATIONS
A234A-1000-S2	FOUNDATION PLAN
A234A-1000-S3	CONCRETE DETAILS
A234A-1000-S4	CONCRETE DETAILS
A234A-1000-S5	MUFFLER EXTENSION DETAILS
A234A-1000-S6	MUFFLER EXTENSION DETAILS

MECHANICAL

A234A-1000-M1	GENERAL NOTES, SYMBOLS AND ABBREVIATIONS
A234A-1000-M2	SCHEDULES & SPECIFICATIONS
A234A-1000-M3	SITE UTILITIES PLAN
A234A-1000-M4 SH 1 OF 2	SITE PLAN
A234A-1000-M4 SH 2 OF 2	PIPE SUPPORTS PLAN
A234A-1000-M5	SOUTH ELEVATIONS
A234A-1000-M6	WEST ELEVATION
A234A-1000-M7	FEEDWATER PIPING SCHEMATIC
A234A-1000-M8	STEAM PIPING SCHEMATIC
A234A-1000-M9 SH 1 OF 3	DETAILS
A234A-1000-M9 SH 2 OF 3	PIPE SUPPORT DETAILS
A234A-1000-M9 SH 3 OF 3	PIPE SUPPORT DETAILS
A234A-1000-M10	PRESSURE TEST PLAN AND SCHEDULE

ELECTRICAL

A234A-1000-E1	ELECTRICAL NOTES, SYBMOLS AND ABBREVIATIONS
A234A-1000-E2	SINGLE LINE DIAGRAM
A234A-1000-E3	SITE PLAN
A234A-1000-E4	SOUTH ELEVATION POWER AND LIGHTING PLAN

CONTROLS (REFERENCE DRAWING FOR CONTROLS INSTRUMENTATION AND TAGGING)

A234A-0900-J1002, SH 1 OF 2	FEEDWATER, BOILER AND STEAM SYSTEM P&ID

SPECIFICATION INDEX

SPECIFICATIONS

AMES STANDARD CONSTRUCTION SPECIFICATIONS (ASCS-AMENDED) LISTED BELOW, SUPPLEMENTAL SPECIFICATION SECTIONS LISTED BELOW, AND THE DRAWINGS LISTED ABOVE.

AMES STANDARD CONSTRUCTION SPECIFICATIONS - AMENDED

01000	GENERAL REQUIREMENTS
01100	SAFETY AND HEALTH
01300	SUBMITTALS
01400	QUALITY CONTROL
01500	ENVIRONMENTAL COMPLIANCE AND POLLUTION PREVENTION
02050	ALTERATIONS AND DEMOLITION
02080	ASBESTOS ABATEMENT
02090	LEAD PAINT ABATEMENT / DEMOLITION
02200	SITE PREPARATION AND EARTHWORK
02500	ASPHALT-CONCRETE PAVINGS AND MARKINGS
03300	CAST-IN-PLACE CONCRETE
05100	STRUCTURAL STEEL
05500	MISCELLANEOUS STEEL
07600	FLASHING AND SHEET METAL
07900	SEALANTS AND CALKINGS
09990	PROTECTIVE COATINGS OF CARBON STEEL
15000	GENERAL MECHANICAL
15050	BASIC MECHANICAL MATERIALS AND METHODS
15400	PLUMBING
15990	TESTING, ADJUSTING AND BALANCING
16000	GENERAL ELECTRICAL

SUPPLEMENTAL SPECIFICATIONS

23 07 00	THERMAL INSULATION FOR MECHANICAL SYSTEMS
23 52 33.03 20.1	DEAERATING HEATER
40 17 26.00 20	WELDING PRESSURE PIPING

REFERENCE SPECIFICATIONS

40 9100	ARC-JET BOILER CONTROL AND BOILER MANAGEMENT SYSTEM - PROCESS MEASUREMENT AND CONTROL DEVICES

WHERE DIFFERING REQUIREMENTS ARE INDICATED, SUPPLEMENTAL SPECIFICATIONS SHALL GOVERN OVER ASCS. REFERENCE CONTROL SPECIFICATIONS SHALL PROVIDE DESIGN CRITERIA AND COORDINATION DATA FOR DESIGN OF CONTROL SYSTEM BY CONTRACTOR.

Approved for Construction
Moffett Field Permit Board

Chief Building Official
Permit No. 10P003

ZONE	LETTER	DESCRIPTION	DRAWN	DATE	APPRVD

REVISIONS

REGISTERED PROFESSIONAL ENGINEER
MICHAEL S. CALLAHAN
M 21956
MECHANICAL
STATE OF CALIFORNIA
Exp. 6/30/11

		DATE
DRAWN	M.CALLAHAN	4/12/10
DESIGNED	M.CALLAHAN	4/12/10
CHECKED	P.WAN	4/12/10
PROJMGR	M.CALLAHAN	4/12/10
REQUESTER	J.BALDOVINO	04/12/2010
USER	J.BALBONI	4/12/10
SAFETY	D.FRASER	4/19/10
SUPERVISOR	S.FRANKEL	4.19.10

Ames Research Center
Moffett Field, California

N234A SVS DEAERATOR/FEEDWATER TANK REPLACEMENT
GENERAL

DRAWING AND SPECIFICATION INDEX

SIZE	CAGE CODE	REV
D	25307	A 234A-1000-G2

SCALE	INDEX	SHEET	OF
AS NOTED			

FILE NAME: 234A-G02 04-12-2010

DWG: R:\234A\60046725.0001 (K80056) Feed Water Deaerator\500_CAD\FEEDWATER\G\Sheet\234A-G02.dwg Version: 17.1s (LMS Tech) User: jjho
DATE: Apr 12, 2010 - 8:59:55 am

DWG NO. A234A-1000-S1 SH. REV

STRUCTURAL GENERAL NOTES

1. ALL WORK SHALL BE IN ACCORDANCE WITH ALL FEDERAL AND STATE BUILDING CODES AND SAFETY ORDINANCES IN EFFECT AT THE TIME OF CONSTRUCTION.
2. ANY CONFLICTS OR DISCREPANCIES BETWEEN THE DRAWINGS AND SITE CONDITIONS SHALL BE IMMEDIATELY BROUGHT TO THE ATTENTION OF THE COTR AND CORRECTED AS DIRECTED BY THE COTR.
3. CONTRACTOR SHALL ASSUME SOLE AND COMPLETE RESPONSIBILITY FOR JOB SITE CONDITIONS DURING THE COURSE OF CONSTRUCTION OF THIS PROJECT. INCLUDING SAFETY OF ALL PERSONS AND PROPERTY. THIS REQUIREMENT SHALL APPLY CONTINUOUSLY AND SHALL NOT BE LIMITED TO NORMAL WORKING HOURS.
4. NO PIPES OR SLEEVES SHALL PASS THROUGH STRUCTURAL MEMBERS WITHOUT APPROVAL OF CONTRACTING OFFICER UNLESS SHOWN ON STRUCTURAL DRAWINGS.
5. CONCRETE SUB-CONTRACTOR SHALL PROVIDE TEMPORARY SHORING AS REQUIRED TO INSURE VERTICAL AND LATERAL STABILITY OF THE SOIL FOR FOUNDATION DURING CONSTRUCTION.
6. ALL DEBRIS AND WASTE GENERATED BY THIS PROJECT SHALL BE LEGALLY RECYCLED OR DISPOSED.
7. SAW CUT (E) A.C. FOR NEW FOOTINGS.
8. REPLACE ANY A.C. TO BE DAMAGED AND REMOVE IT DURING CONSTRUCTION.
9. NOT USED.
10. GENERAL CONTRACTOR SUBMIT THE PLATFORM & TANK STRUCTURAL CALCULATION (LOADS & FOOTINGS) FOR REVIEW AND APPROVAL PRIOR TO FOUNDATION EXCAVATION.
11. DIMENSION ARE REFERENCE ONLY. CONTRACTOR SHALL FIELD VERIFY ALL EXISTING SIZES, CONDITIONS, MEMBERS ELEVATIONS AND DIMENSIONS BEFORE BEGINNING CONSTRUCTION AND/OR ORDERING MATERIAL.

REINFORCEMENT STEEL

1. ALL REINFORCING STEEL WORK SHALL BE ACCORDING TO THE REQUIREMENT OF AMERICAN CONCRETE INSTITUTE (ACI).
2. REINFORCING BARS SHALL BE IN ACCORDANCE WITH REQUIREMENTS OF ASTM A615, GRADE 60. DEFORMED BARS.
3. LAP SPLICE LENGTH SCHEDULE:

   F'c = 3,000 PSI

   BASIC LAP

   #4..........28 IN.
   #5..........36 IN.
   #6..........43 IN.
   #7..........62 IN.

4. CONCRETE COVER:

   UNLESS OTHERWISE NOTED, CONCRETE COVERAGE OF REINFORCING BARS SHALL BE AS FOLLOWS:

   3" – ALL BARS WHERE CONCRETE IS DEPOSITED DIRECTLY AGAINST EARTH.

   2" – FOR #6 AND LARGER BARS WHERE CONCRETE IS EXPOSED TO EARTH AND/OR WEATHER BUT DEPOSITED AGAINST FORMS.

   1-1/2" – FOR #5 AND SMALLER BARS FOR SLABS, WALLS, BEAMS, COLUMNS AND EXTERIOR SURFACES EXPOSED TO EARTH OR WEATHER BUT DEPOSITED AGAINST FORMS.

5. ALL REINFORCING STEEL AND EMBEDMENTS TO BE HELD SECURELY IN PLACE PRIOR TO PLACING CONCRETE. PROVIDE SUFFICIENT SUPPORTS TO ALLOW WALKING ON REINFORCEMENT. NO BRICK OR POROUS MATERIAL SHALL BE USED TO SUPPORT REINFORCING.

STRUCTURAL ABBREVIATIONS

℄	CENTER LINE
A.B.	ANCHOR BOLT
A.C.	ASPHALT CONCRETE
B.PL	BASE PLATE
BOT	BOTTOM
B.O.S	BOTTOM OF STEEL
CLR	CLEAR
COL	COLUMN
CONT	CONTINUOUS
COTR	CONTRACTING OFFICER'S TECHNICAL REPRESENTATIVE
DET	DETAIL
DWL	DOWEL
DWG	DRAWING
(E)	EXISTING
EA	EACH
E.F.	EACH FACE
EMBED	EMBEDMENT
EQ	EQUAL
E.W.	EACH WAY
F.S.	FAR SIDE
F.F.	FINISH FLOOR
FTG	FOOTING
GA	GAUGE
GALV	GALVANIZED
GFE	GOVERNMENT FURNISHED EQUIPMENT
H.R.	HAND RAIL
HORIZ	HORIZONTAL
HT	HEIGHT
LLH	LONG LEG HORIZONTAL
LLV	LONG LEG VERTICAL
MAX	MAXIMUM
MIN.	MINIMUM
(N)	NEW
N.S.	NEAR SIDE
N.T.S.	NOT TO SCALE
O.C.	ON CENTER
OPNG	OPENING
OPP	OPPOSITE
PL	PLATE
PLCS.	PLACES
PS	PIPE SUPPORT
PSF	PIPE SUPPORT FEEDWATER
PSM	PIPE SUPPORT MAKE-UP
REINF	REINFORCING
REQ'D	REQUIRED
SIM	SIMILAR
SPEC	SPECIFICATION
SPC	SPACING
STL	STEEL
SYMM	SYMMETRICAL
T&B	TOP AND BOTTOM
TBM	TEMPORARY BENCH MARK
THK	THICK
T.O.	TOP OF
T.O.F	TOP OF FOOTING
T.O.S	TOP OF STEEL
T.O.C	TOP OF CONCRETE
TYP	TYPICAL
U.N.O.	UNLESS NOTED OTHERWISE
VERT	VERTICAL
V.I.F.	VERIFY IN FIELD
W.W.F.	WELDED WIRE FABRIC
W.P.	WORK POINT

DESIGN CRITERIA FOR TANK PLATFORM STRUCTURE & FOOTING

1. APPLICABLE CODE 2007 CALIFORNIA BUILDING CODE, ASCE 7-05
2. SEISMIC DESIGN NON-BUILDING STRUCTURES CHAPTER 15 ASCE 7-05

   S1 = 0.61
   S_s = 1.5
   R = 2 TABLE 15.4-2
   I = 1.5
   SOIL TYPE D

HORIZONTAL DISPLACEMENT LIMIT DUE TO SEISMIC SHALL BE 1.25" FOR DEAERATOR TANK PLATFORM.

3. WIND DESIGN PER CBC SECTION 1609 OR ASCE 7 CHAPTER 6

   I = 1.15
   EXPOSURE B
   V= 85 mph

4. ALLOWABLE SOIL PRESSURE BASE ON SOIL REPORT BY FUGRO INC. ARE AS FOLLOW:
   a. FOR DEAD PLUS LIVE LOAD 1,000 PSF.
   b. FOR SEISMIC LOAD 3,200 OSF AT EDGE OF FOOTING.
5. LOAD COMBINATION SHALL BE IN ACCORDANCE W/SECTION 2.3 & 2.4 OF ASCE 7-05.
6. IN THE EVENT THAT SEISMIC RESPONSE SPECTRUM ANALYSIS IS PERFORMED, USE THE RESPONSE SPECTRUM SHOWN ON ASCE 7-05 CHAPTER 11 SECTION 11.4-5.

CONCRETE

1. CONCRETE SHALL DEVELOP THE FOLLOWING MINIMUM COMPRESSIVE STRENGTH AT 28 DAYS (MINIMUM f'c) WHEN TESTED IN ACCORDANCE WITH ASTM C39.

   ALL CONCRETE (NORMAL WEIGHT)..........3,000 PSI (CONCRETE STRENGTH SUPERSEDES THE AMES STANDARD CONSTRUCTION SPECIFICATION)
2. PORTLAND CEMENT SHALL CONFORM TO ASTM C-150 TYPE II LOW ALKALI.
3. PRIOR TO PLACING CONCRETE, THE CONTRACTOR SHALL ENSURE THAT ALL EMBEDMENTS, INCLUDING ANCHOR BOLTS, ARE PROPERLY LOCATED AND SECURELY TIED IN PLACE.
4. SUBMIT LOCATION PLAN FOR ALL PROPOSED JOINTS NOT INDICATED ON DRAWINGS FOR APPROVAL PRIOR TO WORK.
5. NON-SHRINK GROUT SHALL HAVE A MIN. 6000 PSI COMPRESSIVE STRENGTH.
6. DIMENSIONAL TOLERANCE FOR ALL CONCRETE WORK SHALL BE ACCORDING TO THE ACI CODE REQUIREMENT.
7. EPOXY ANCHOR ADHESIVE SHALL MEET THE REQUIREMENT OF CBC 2007/ACI APPENDIX D & SHALL HAVE ICC-ES EVALUATION REPORT.

FOUNDATIONS

1. SUBGRADE PROCESSED IN ACCORDANCE WITH THE PROJECT GEOTECHNICAL REPORT, MOISTURE CONDITIONED, AND COMPACTED TO 87 TO 92% RELATIVE COMPACTION (ASTM D1557) AT A MOISTURE CONTENT AT LEAST 3 PERCENT OVER LABORATORY OPTIMUM. SEE PROJECT GEOTECHNICAL REPORT FOR MORE DETAILS.
2. NO CONCRETE SHALL BE POURED IN ANY FOUNDATION UNTIL EXCAVATION HAS BEEN INSPECTED AND APPROVED BY COTR.
3. FOUNDATION DESIGN IS BASED ON GEOTECHNICAL STUDY DONE FOR NASA AMES N234A SVS DEAERATOR/FEEDWATER TANK REPLACEMENT PROJECT DATED FEBRUARY 2010.
4. CONTRACTOR TO PROVIDE FOR DE-WATERING OF EXCAVATION FOR EITHER SURFACE WATER, GROUND WATER OR SEEPAGE IF REQUIRED.

STRUCTURAL STEEL

1. FABRICATION AND CONSTRUCTION SHALL CONFORM TO THE AMERICAN INSTITUTE OF STEEL CONSTRUCTION, MANUAL OF STEEL CONSTRUCTION. ALLOWABLE STRESS DESIGN, SPECIFICATIONS AND CODES, 13TH EDITION.
2. STRUCTURAL STEEL SHAPES, EXCEPT W-SHAPES, BARS AND ROD SHALL CONFORM TO ASTM A36.
3. W-SHAPES SHALL BE ASTM A992, GRADE 50. PLATE MATERIAL FOR FRAME CONNECTIONS SHALL BE ASTM A572 GRADE 50.
4. HOLLOW STRUCTURAL SECTION (HSS) SHALL BE ASTM A500 GRADE B, Fy = 46 KSI.
5. STEEL PIPE SHALL BE STANDARD OR EXTRA STRONG PIPE CONFORMING TO ASTM A53, GRADE B UNLESS OTHERWISE NOTED.
6. HIGH STRENGTH BOLTS (H.S.B.) SHALL BE ASTM A325, BOLT TYPE AS INDICATED ON DRAWINGS. ALL BOLTS SHALL BE FULLY TENSIONED UNLESS OTHERWISE NOTED.
7. ANCHOR BOLTS (A.B.) SHALL BE ASTM A307 HEX HEAD BOLTS WITH FLAT WASHERS OR F1554 55 ksi THREADED RODS WITH NUTS AND FLAT WASHERS U.N.O. ON DRAWINGS.
8. BOLT HOLES IN STEEL SHALL BE 1/16" LARGER THAN BOLTS, UNLESS OTHERWISE NOTED ON PLANS. ALL BOLT HOLES TO BE DRILLED OR PUNCHED. BURNING OF HOLES SHALL NOT BE PERMITTED.
9. ALL SHOP AND FIELD WELDING PER AWS, D1.1, STRUCTURAL WELDING CODE. WELDING ELECTRODE – E70XX, OR EQUIVALENT, SHALL BE USED AT ALL STRUCTURAL STEEL CONNECTIONS.
10. DEFECTIVE WELDS SHALL BE GROUND OUT, REPAIRED, AND RE-TESTED AT CONTRACTORS EXPENSE.
11. ALL STRUCTURAL STEEL SHALL BE PRIMED AND PAINTED ACCORDING TO SPECIFICATION.
12. AN INDEPENDENT TESTING LABORATORY EMPLOYED BY THE CONTRACTOR WILL BE ASSIGNED TO INSPECT THE INSTALLATION, MATERIALS AND WELDING PROCEDURE. THE TESTING AGENCY SHALL PERFORM THE FOLLOWING TASKS AND INSPECTIONS:
    A. FURNISH COPIES OF MILL TEST REPORTS OF ALL STEEL MATERIALS TO THE GOVERNMENT SHOWING CONFORMANCE WITH SPECIFIED ASTM DESIGNATIONS PRIOR TO FABRICATION OF ANY WORK. CERTIFIED LOTS SHALL BE SO IDENTIFIED.
    B. QUALIFICATION OF SHOP AND FIELD WELDING PROCEDURES AND PERSONNEL.
    C. CONTINUOUS VISUAL AND ULTRASONIC INSPECTION OF ALL WELDS IN ACCORDANCE WITH SECTION 6 OF AWS D1.1 WELDING CODE, 2007 C.B.C. AND THESE DRAWINGS.
    D. INSPECTION OF SHOP AND FIELD WELDING PROCEDURES.
    E. 100% ULTRASONIC INSPECTION OF ALL FULL PENETRATION WELDS PER AWS D 1.1-2004 TABLE 6.2 FOR ACCEPTANCE-REJECTION CRITERIA.

POST-INSTALLED CONCRETE ANCHORS

CHEMICALLY BONDED ANCHORS:

1. ALL HOLES FOR POST-INSTALLED ANCHORS SHALL BE DRILLED, CLEANED AND PREPARED IN ACCORDANCE WITH MANUFACTURER'S RECOMMENDATIONS AND THE APPLICABLE ICC-ESR. WHERE AN ANCHOR DOES NOT SET PROPERLY, OR FAILS A TENSION TEST, OR REINFORCEMENT IS ENCOUNTERED DURING DRILLING, THE DRILLED HOLE MAY NOT BE REUSED. ABANDONED HOLES SHALL BE FILLED WITH NON-SHRINK GROUT. THE MINIMUM SPACING BETWEEN AN ABANDONED HOLE AND A DRILLED HOLE USED FOR A POST-INSTALLED ANCHOR SHALL NOT BE LESS THAN 1-1/2" ANCHOR DIAMETERS UNLESS OTHERWISE APPROVED BY THE COTR. IF THE ANCHOR OR DOWEL MAY NOT BE SHIFTED AS NOTED ABOVE, THE ENGINEER OF RECORD WILL DETERMINE A NEW LOCATION. LOCATE REINFORCEMENT, AVOID CUTTING (E) REBAR AND CONFIRM FINAL LOCATIONS PRIOR TO FABRICATING PLATES, MEMBERS, OR OTHER STEEL ASSEMBLIES ATTACHED WITH ADHESIVE ANCHORS.
2. COMPLY WITH 2007 CBC AND SHALL HAVE ESR REPORT NUMBER.
3. ADHESIVE ANCHOR SHALL BE INSTALLED IN ACCORDANCE WITH MANUFACTURERS RECOMMENDATION & REQUIREMENT & THE PRODUCT ICC REPORT.
4. SPECIAL INSPECTION OF ADHESIVE ANCHOR SHALL BE IN ACCORDANCE WITH CBC SECTION 1701. ITEMS TO BE REPORTED ARE:
   - ADHESIVE PRODUCT INCLUDING THE NAME AND EXPIRATION DATE.
   - ANCHOR BOLT OR REBAR MATERIAL, GRADE DIAMETER, LENGTH & CLEANLINESS.
   - DRILL BIT DIAMETER.
   - HOLE DEPTH AND CLEANLINESS.
5. THE TESTING OF POST-INSTALLED ANCHOR SHALL BE DONE IN THE PRESENCE OF THE SPECIAL INSPECTOR AND A REPORT OF THE TEST RESULT SHALL BE SUBMITTED TO THE COTR.
6. POST-INSTALLED ANCHOR HAVE CONTINUOUS INSPECTION AS EXPLAINED IN CBC 2007 SECTION 1702.1.
7. A TENSION TEST IS REQUIRED ON 20% OF ALL BOLTS FOR EACH CONNECTION PLATE. IF ANY OF THE BOLTS FAIL THE TEST, 100% OF THE BOLTS SHALL BE TESTED. TEST LOCATIONS SHALL BE SELECTED BY THE CONTRACTING OFFICER.
8.

TENSION TEST LOADS (POUNDS)
HILTI HIT-RE 500 SD (ICC-ES ESR 23220)
CRAKED CONCRETE, SEISMIC (ASD), CONDITION B

NOMINAL ANCHOR DIAMETER	NOMINAL REBAR SIZE	EMBEDMENT DEPTH, h_{ef} (INCHES)	NORMAL-WEIGHT CONCRETE f'_c =3000 psi CARBON STEEL
1/2	#4	6	6,420
5/8	#5	8	10,390
3/4	#6	9	14,918
7/8	#7	12	16,220

REGISTERED PROFESSIONAL ENGINEER
MICHAEL S. CALLAHAN
M 21188
MECHANICAL
STATE OF CALIFORNIA

LEGEND

——— (E) STRUCTURE TO REMAIN

– – – – (E) STRUCTURE TO BE REMOVED

——— NEW STRUCTURE

QUALITY CONTROL

1. INSPECTIONS AND TESTING SHALL COMPLY WITH SPECIFICATIONS.
2. ALL INSPECTIONS INCLUDING SPECIAL INSPECTIONS AND CONTINUOUS INSPECTION SHALL BE DONE BY AN INDEPENDENT QUALIFIED TESTING AGENCY AND QUALIFIED INSPECTORS AT THE EXPENSE OF THE CONTRACTOR. GOVERNMENT SHALL BE NOTIFIED IN ADVANCE TO WITNESS ALL THE TESTS. ALL TEST RESULTS DOCUMENTATIONS SHALL BE SUBMITTED TO THE GOVERNMENT.
3. SPECIAL INSPECTION SHALL COMPLY WITH 2007 CBC, SECTION 1701. SPECIAL INSPECTION SHALL BE PROVIDED FOR THE FOLLOWING USE:

   A) WELDING – WELDING SHALL BE DONE IN A GOVERNMENT APPROVED SHOP. APPROVED FABRICATORS SHALL CONFORM TO CBC 1701. ALL FIELD WELDING SHALL HAVE CONTINUOUS INSPECTION.

   B) HIGH STRENGTH BOLTS – DURING INSTALLATION. AND EPOXY TYPE ANCHOR BOLTS.

   C) REINFORCING STEEL PLACEMENT.

   D) ALL CONCRETE WORK.

Approved for Construction
Moffett Field Permit Board

Chief Building Official
Permit No. 10P003

ZONE	LETTER		DRAWN	DATE	APPRVD

DRAWN	F.BONALDI	DATE 4-12-10
DESIGNED	A.FIROUZI	DATE 4/12/10
CHECKED	R.HAWTHORNE	DATE 4/12/10
PROJMGR	M.CALLAHAN	DATE 4/12/10
REQUESTER	J.BALDOVINO	DATE 04/14/2010
USER	J.BALBONI	DATE 4/12/10
SAFETY	D.FRASER	DATE 4/19/10
SUPERVISOR	S.FRANKEL	DATE 4.14.10
REVIEWED	W.LEE	DATE 4/14/10

Ames Research Center
Moffett Field, California

N234A SVS DEAERATOR/FEEDWATER TANK REPLACEMENT
STRUCTURAL

STRUCTURAL NOTES, SYMBOLS, AND ABBREVIATIONS

SIZE D | CAGE CODE 25307 | A 234A-1000-S1 | REV
SCALE AS NOTED | INDEX | SHEET | OF

FILE NAME: 234A-S01 04-12-2010

DWG: R:\234A\60046725.0001 (K80056) Feed Water Deaerator\500_CAD\FEEDWATER\S\Sheet\234A-S01.dwg Version: 17.1s (LMS Tech) User: jjho
DATE: Apr 12, 2010 – 8:59:57 am

DWG NO.	SH.	REV
A234A-1000-S2		

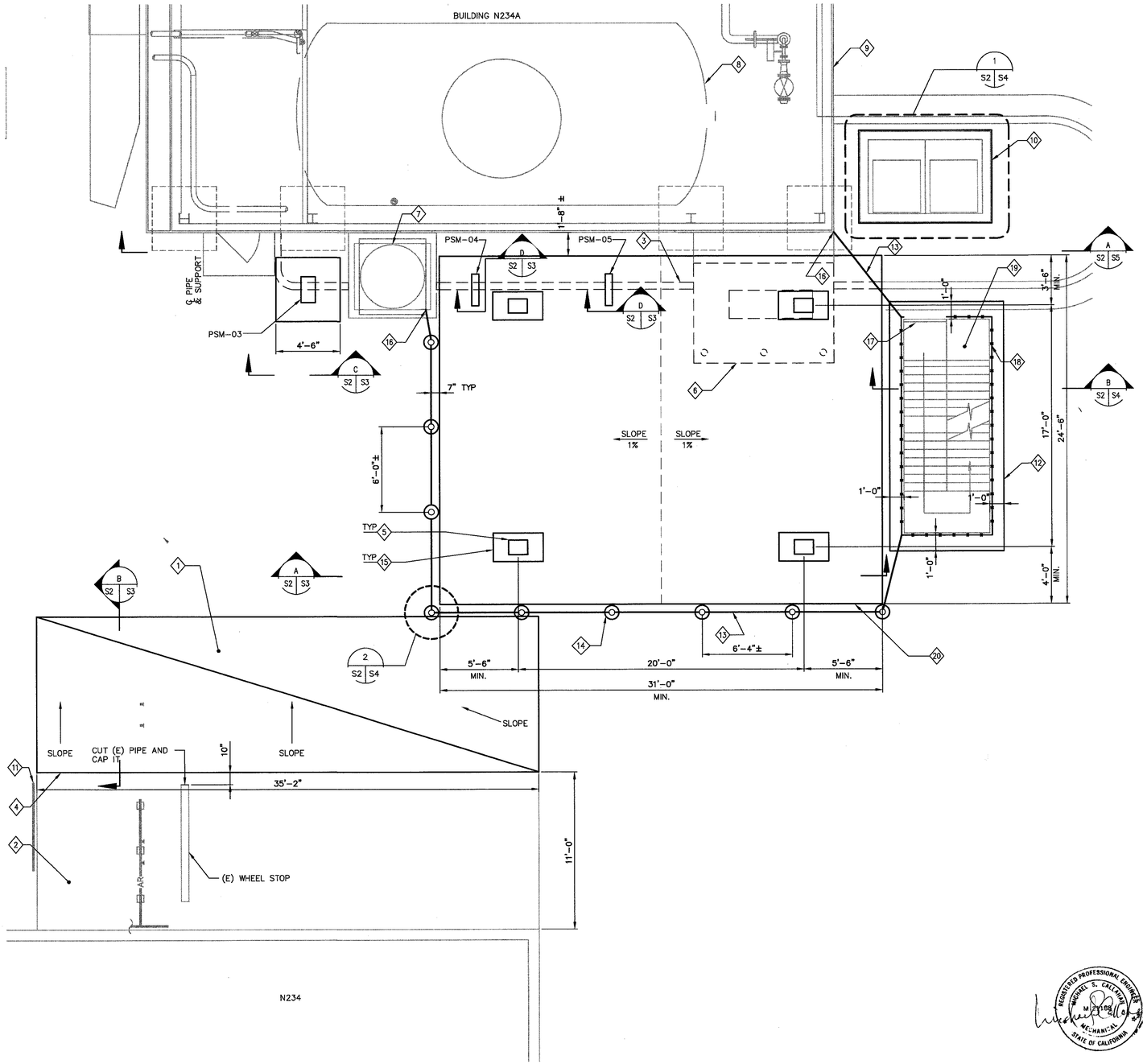

1 S2 S2 FOUNDATION PLAN
SCALE: 1/4" = 1'-0"

1/4"=1' 0 2 4 8 12

SHEET NOTES

1. FOR LOCATION OF PIPE SUPPORTS SEE MECHANICAL DRAWINGS.
2. FOR PIPING REQUIREMENTS SEE MECHANICAL DRAWINGS.
3. FOR LOCATION OF DEAERATOR PLATFORM SEE MECHANICAL DRAWINGS.
4. FOR UNDERGROUND UTILITIES SEE M3.

KEY NOTES

1. 4" ASPHALT CONCRETE ON TOP OF 8" AGGREGATE BASE. SLOPE TO MATCH EXISTING GRADE FOR DRAINAGE.
2. (E) ARGON TRAILER CONCRETE PAD TO REMAIN.
3. REMOVE PORTION OF EXISTING CURB THAT FALLS INTO PERIMETER OF NEW FOOTING.
4. SAWCUT AND REMOVE PORTION OF CONCRETE PAD.
5. DEAERATOR TANK PLATFORM COLUMN BY TANK MANUFACTURER.
6. REMOVE PORTION OF THE EXISTING EQUIPMENT CONCRETE PAD AND BOLLARDS THAT FALLS INTO THE PERIMETER OF NEW FOOTING.
7. (E) MUFFLER TO REMAIN. SEE DETAIL ON SHEET S5 FOR MUFFLER EXTENSION SUPPORT,
8. (E) DEAERATOR TANK. REFERENCE ONLY.
9. (E) BOILER HOUSE.
10. CHEMICAL FEED EQUIPMENT CONCRETE PAD.
11. (E) GUARDRAIL TO REMAIN.
12. STAIR FOOTING SHALL BE LOCATED BASED ON PLATFORM MANUFACTURER REQUIREMENTS.
13. PLASTIC YELLOW CHAIN AND "S" HOOK AT EACH END, TYP.
14. BOLLARD. SEE DETAIL 2 ON SHEET S4, TYPICAL.
15. AREA UNDER ALL THE BASE PLATE FOOTPRINTS SHALL BE LEVELED AND BE AT THE SAME ELEVATION.
16. INSTALL AN EYE HOOK TO CONNECT THE PLASTIC CHAIN.
17. 3'-0"X6'-0" HEAVY-DUTY ACCORDION TYPE METAL FOLDING DOOR WITH GREY POWDER COATED FINISH. PROVIDE LOCKING BARS AT BOTH SIDES OF DOOR GATE; ONE SIDE HINGED AND ONE SIDE LOCKABLE WITH PADLOCK HASP. ATTACH BARS TO STAIR COLUMNS PER MANUFACTURER RECOMMENDATIONS.
18. CHAIN LINK FENCE ATTACHED TO STAIR COLUMNS.
19. PREFABRICATED STAIR. SEE KEY NOTE 8 ON SHEET M4.
20. REINFORCED CONCRETE DEAERATOR EQUIPMENT FOUNDATION

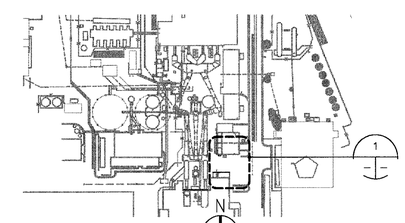

KEY PLAN

Approved for Construction
Moffett Field Permit Board

Chief Building Official
Permit No. 10P003

ZONE	LETTER	DESCRIPTION	DRAWN	DATE	APPRVD
		REVISIONS			

REGISTERED PROFESSIONAL ENGINEER MICHAEL S. CALLAHAN MECHANICAL STATE OF CALIFORNIA

		DATE
DRAWN F.BONALDI		4-12-10
DESIGNED A.FIROUZI		4/12/10
CHECKED R.HAWTHORNE		4/12/10
PROJMGR M.CALLAHAN		4/12/10
REQUESTER J.BALDOCINO		04/12/2010
USER J.BALBONI		4/12/10
SAFETY D.FRASER		4/19/10
SUPERVISOR S.FRANKEL		4/14/10
REVIEWED W.LEE		4/14/10

Ames Research Center
Moffett Field, California

N234A SVS DEAERATOR/FEEDWATER TANK REPLACEMENT
STRUCTURAL

FOUNDATION PLAN

SIZE	CAGE CODE		REV
D	25307	A 234A-1000-S2	
SCALE		INDEX	SHEET OF

FILE NAME: 234A-S02 04-12-2010

DWG: R:\234A\60048725.0001 (K80056) Feed Water Deaerator\500_CAD\FEEDWATER\S\Sheet\234A-S02.dwg Version: 17.1s (LMS Tech) User: jjho
DATE: Apr 12, 2010 - 9:00:01 am

DWG NO.	SH.	REV
A234A-1000-S3		

SHEET NOTES

1. FOR STRUCTURAL GENERAL NOTES SEE S1.
2. FOR LOCATION OF PIPE SUPPORTS SEE MECHANICAL DRAWINGS.
3. FOR PIPING REQUIREMENTS SEE MECHANICAL DRAWINGS.
4. FOR SUBGRADE PREPARATION SEE SHEET S1 AND PROJECT GEOTECHNICAL REPORT.
5. ALL ANCHOR BOLTS SHALL HAVE MINIMUM 3 THREADS EXPOSED ABOVE NUT.
6. FOR PIPE SUPPORTS SEE MECHANICAL DRAWINGS.

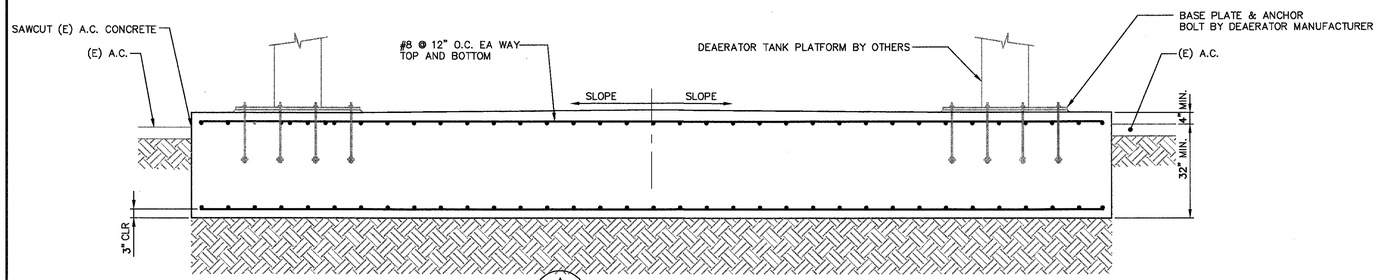

A FOOTING – SECTION
S2 S3 SCALE: 1/2" = 1'-0"

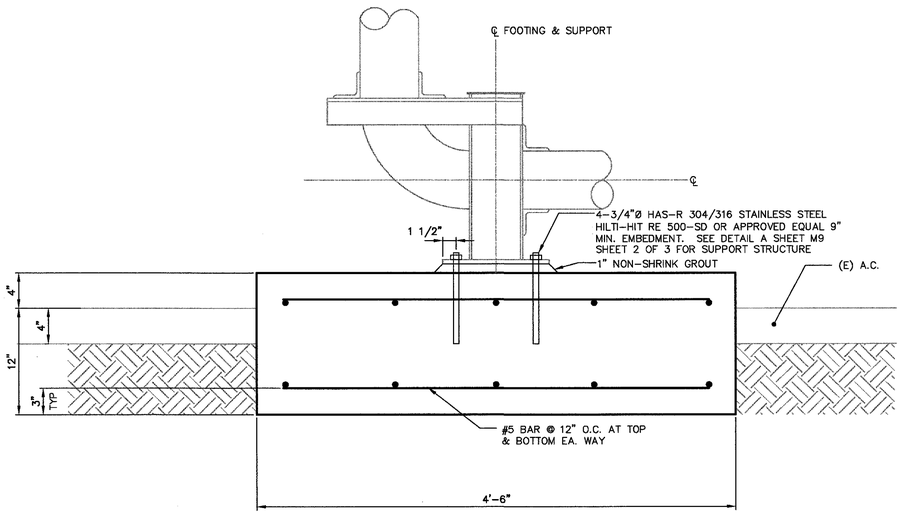

C PSM-03 PIPE SUPPORT FOOTING
S2 S3 SCALE: 1 1/2" = 1'-0"

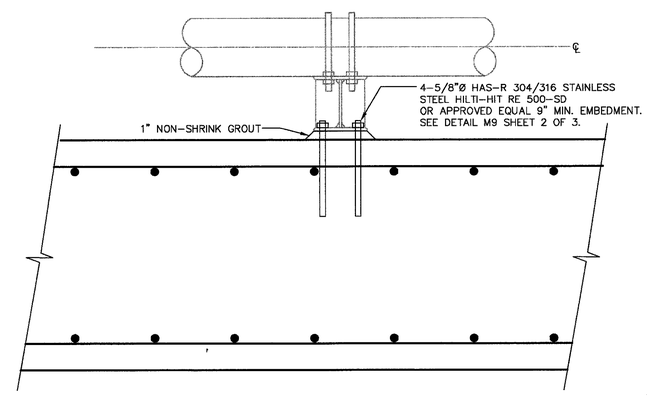

D PSM-04 & PSM-05 PIPE SUPPORT FOOTING
S2 S3 SCALE: 1 1/2" = 1'-0"

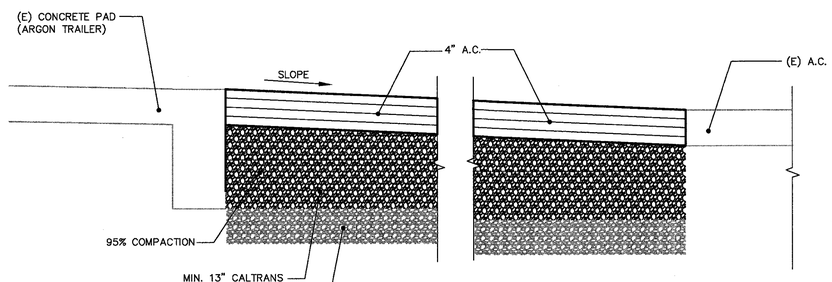

B A.C. PAVING DETAIL
S2 S3 SCALE: 1 1/2" = 1'-0"

Approved for Construction
Moffett Field Permit Board
Chief Building Official
Permit No. 10P003

ZONE	LETTER	DESCRIPTION	DRAWN	DATE	APPRVD
		REVISIONS			

DRAWN F.BONALDI	DATE 4-12-10	
DESIGNED A.FIROUZ	DATE 4/12/10	
CHECKED R.HAWTHORNE	DATE 4/12/10	
PROJMGR M.CALLAHAN	DATE 4/12/10	
REQUESTER J.BALDOVINO	DATE 04/12/2010	
USER J.BALBONI	DATE 4/12/10	
SAFETY D.FRASER	DATE 4/12/10	
SUPERVISOR S.FRANKEL	DATE 4/12/10	
REVIEWED W.LEE	DATE 4/12/10	

REGISTERED PROFESSIONAL ENGINEER MICHAEL S. CALLAHAN M 21338 MECHANICAL STATE OF CALIFORNIA

Ames Research Center
Moffett Field, California

N234A SVS DEAERATOR/FEEDWATER TANK REPLACEMENT
STRUCTURAL

CONCRETE DETAILS

SIZE	CAGE CODE		REV
D	25307	A 234A-1000-S3	
SCALE		INDEX	SHEET OF

FILE NAME: 234A-S03 04-12-2010

DWG: R:\234A\60046725.0001 (K80056) Feed Water Deaerator\500_CAD\FEEDWATER\S\Sheet\234A-S03.dwg Version: 17.1s (LMS Tech) User: jlho
DATE: Apr 12, 2010 - 9:00:02 am

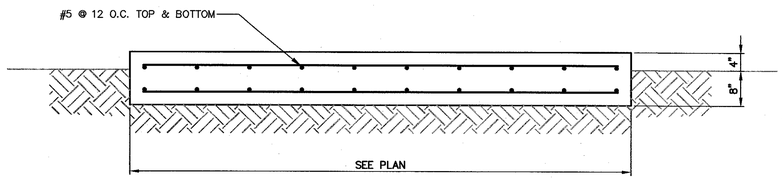

A / S4 S4 CHEMICAL FEED EQUIPMENT FOOTING – SECTION
SCALE: 3/4" = 1'-0"

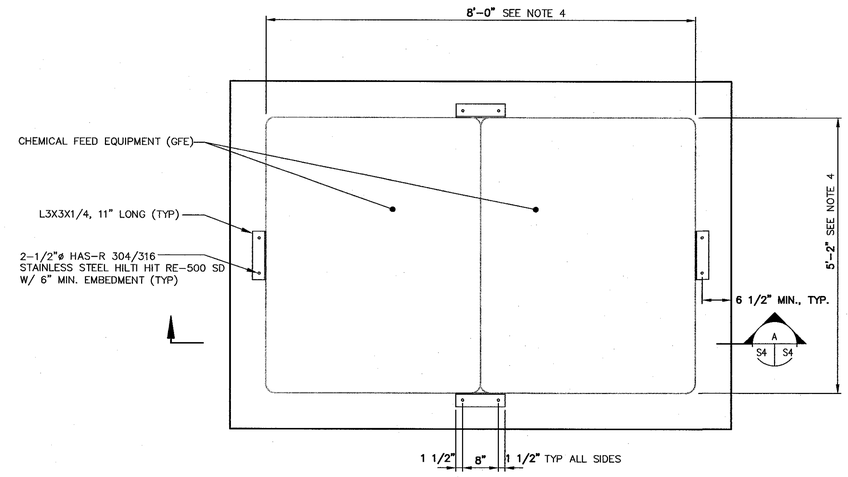

1 / S2 S4 CHEMICAL FEED EQUIPMENT FOOTING PLAN
SCALE: 3/4" = 1'-0"

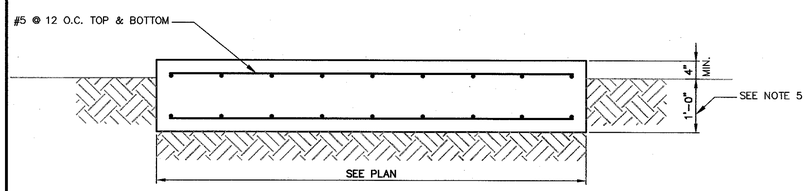

B / S2 S4 STAIR FOOTING
SCALE: 3/4" = 1'-0"

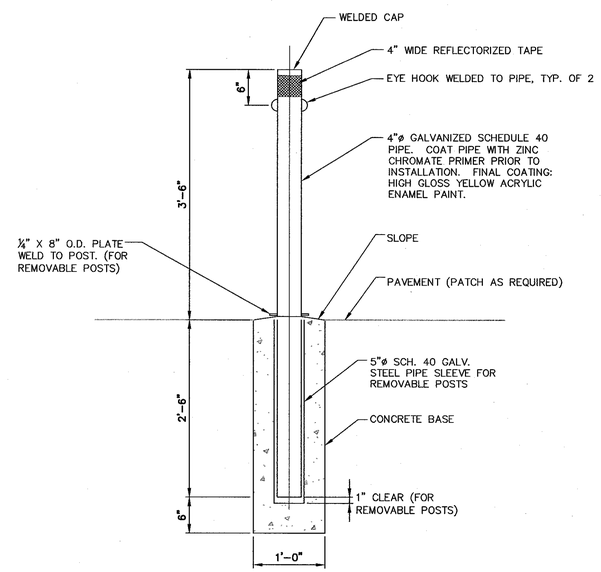

2 / S2 S4 REMOVABLE BOLLARD
SCALE: 1" = 1'-0"

SHEET NOTES

1. FOR STRUCTURAL GENERAL NOTES SEE S1.
2. FOR SUBGRADE PREPARATION SEE SHEET S1 AND PROJECT GEOTECHNICAL REPORT.
3. ALL ANCHOR BOLTS SHALL HAVE MIN. 3 THREADS EXPOSED ABOVE NUT.
4. VERIFY DIMENSIONS OF GFE EQUIPMENT (NALCO PORTA-FEED JUNIOR WITH SECONDARY CONTAINMENT BASIN) PRIOR TO CONSTRUCTION.
5. VERIFY THE DEPTH OF THE STAIR FOOTING WITH REQUIRED ANCHOR BOLTS EMBEDMENT DEPTH PROVIDED BY PLATFORM MANUFACTURER PRIOR TO POURING CONCRETE.

Approved for Construction
Moffett Field Permit Board
Chief Building Official
Permit No. 10P003

ZONE	LETTER	DESCRIPTION	DRAWN	DATE	APPRVD

REVISIONS

DRAWN F.BONALDI		DATE 4-12-10
DESIGNED A.FIROUZI		DATE 4/12/10
CHECKED R.HAWTHORNE		DATE 4/12/10
PROJMGR M.CALLAHAN		DATE 4/12/10
REQUESTER J.BALDOVINO		DATE 04/14/2010
USER J.BALBONI		DATE 4/12/10
SAFETY D.FRASER		DATE 4/19/10
SUPERVISOR S.FRANKEL		DATE 4-14-10
REVIEWED W.LEE		DATE 4/14/10

REGISTERED PROFESSIONAL ENGINEER MICHAEL S. CALLAHAN M 21188 MELHANI AL STATE OF CALIFORNIA

Ames Research Center
Moffett Field, California

N234A SVS DEAERATOR/FEEDWATER TANK REPLACEMENT
STRUCTURAL

CONCRETE DETAILS

SIZE	CAGE CODE		REV
D	25307	A 234A-1000-S4	
SCALE		INDEX	SHEET OF

FILE NAME: 234A-S04 04-12-2010

DWG: R:\234A\60046725.0001 (K80056) Feed Water Deaerator\500_CAD\FEEDWATER\S\Sheet\234A-S04.dwg Version: 17.1s (LMS Tech) User: wbonaldi
DATE: Apr 12, 2010 - 12:49:07 pm

DWG NO.	SH.	REV
A234A-1000-S5		

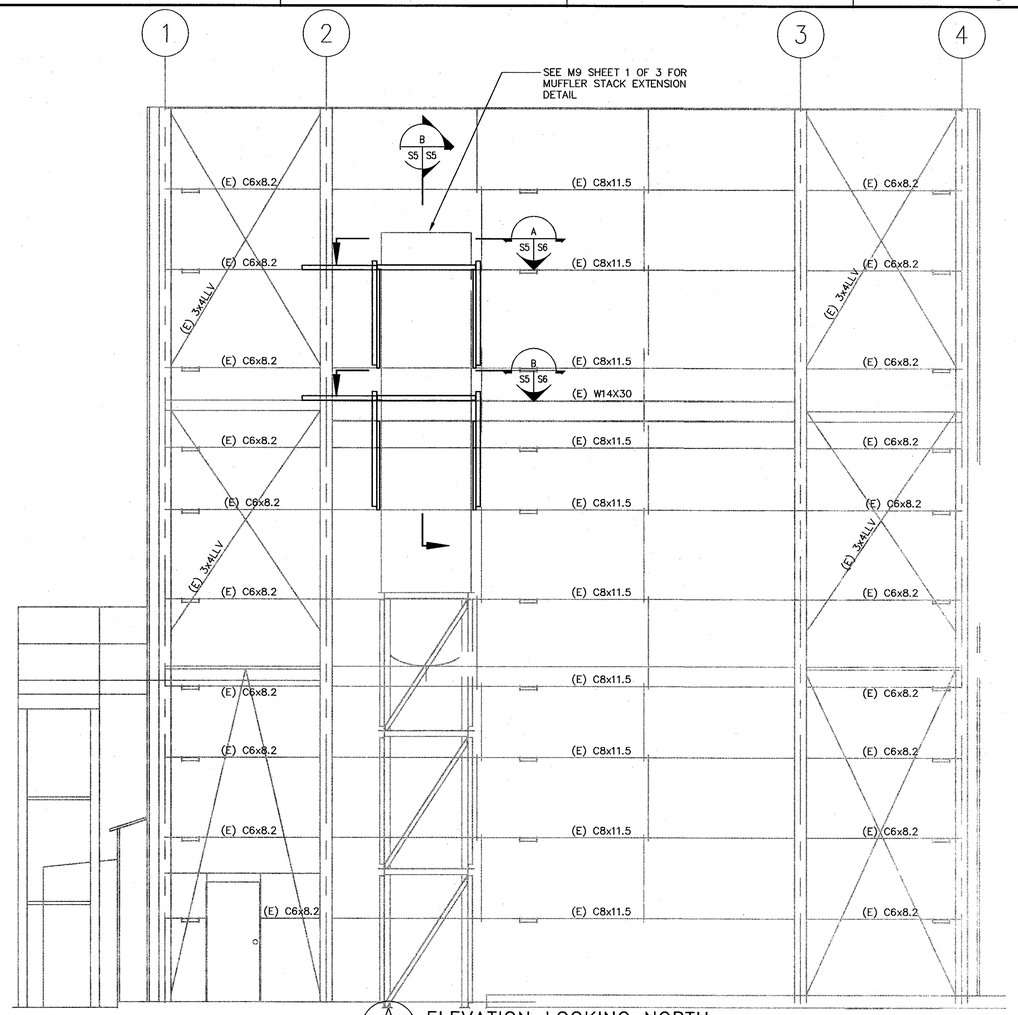

A ELEVATION LOOKING NORTH
S2 S5 SCALE: 1/4" = 1'-0"

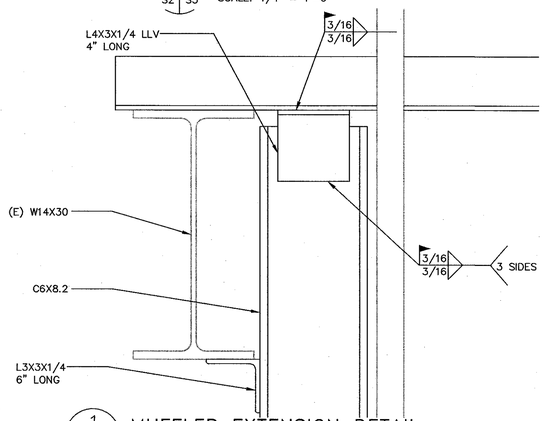

1 MUFFLER EXTENSION DETAIL
S5 S5 SCALE: 3" = 1'-0"

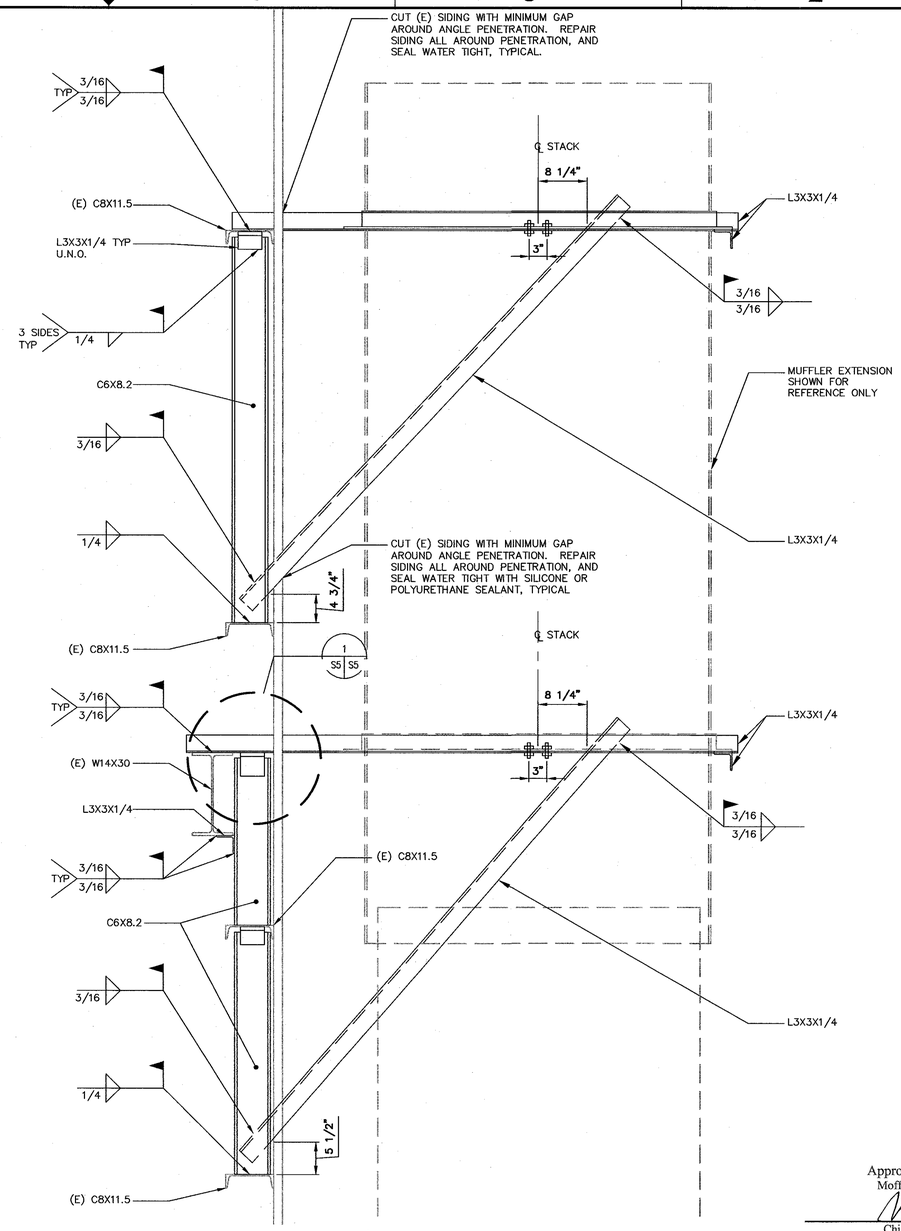

B MUFFLER EXTENSION DETAIL
S5 S5 SCALE: 1" = 1'-0"

Approved for Construction
Moffett Field Permit Board

Chief Building Official
Permit No. 10P003

SHEET NOTES

1. DIMENSION ARE REFERENCE ONLY. CONTRACTOR SHALL FIELD VERIFY ALL EXISTING SIZES, CONDITIONS, MEMBERS ELEVATIONS AND DIMENSIONS BEFORE BEGINNING CONSTRUCTION AND/OR ORDERING MATERIAL.

REGISTERED PROFESSIONAL ENGINEER ARTA FIROUZI No. 3535 Exp. 3/31/2012 STRUCTURAL STATE OF CALIFORNIA

ZONE	LETTER	DESCRIPTION	DRAWN	DATE	APPRVD
		REVISIONS			

		DATE
DRAWN F.BONALDI		4/22/10
DESIGNED A.FIROUZI		4/22/10
CHECKED R.HAWTHORNE	for RJH	4/22/10
PROJMGR M.CALLAHAN		4/22/10
REQUESTER J.BACOVINA		4/28/2010
USER J.BALBONI		4/26/10
SAFETY D.FRASER		4/23/10
SUPERVISOR S.FRANKEL		5-7-10
REVIEWED W.LEE		4/27/10

Ames Research Center
Moffett Field, California

N234A SVS DEAERATOR/FEEDWATER TANK REPLACEMENT
STRUCTURAL

MUFFLER EXTENSION DETAILS

SIZE	CAGE CODE		REV
D	25307	A 234A-1000-S5	
SCALE		INDEX	SHEET OF

FILE NAME: 234A-S05 04-22-2010

DWG: R:\234A\60046725.0001 (K80056) Feed Water Deaerator\300_CAD\FEEDWATER\S\Sheet\234A-S05.dwg Version: 17.1s (LMS Tech) User: wbonaldi
DATE: Apr 22, 2010 - 3:18:15 pm

DWG NO.	SH.	REV
A234A-1000-S6		

SHEET NOTES

1. DIMENSION ARE REFERENCE ONLY. CONTRACTOR SHALL FIELD VERIFY ALL EXISTING SIZES, CONDITIONS, MEMBERS ELEVATIONS AND DIMENSIONS BEFORE BEGINNING CONSTRUCTION AND/OR ORDERING MATERIAL.

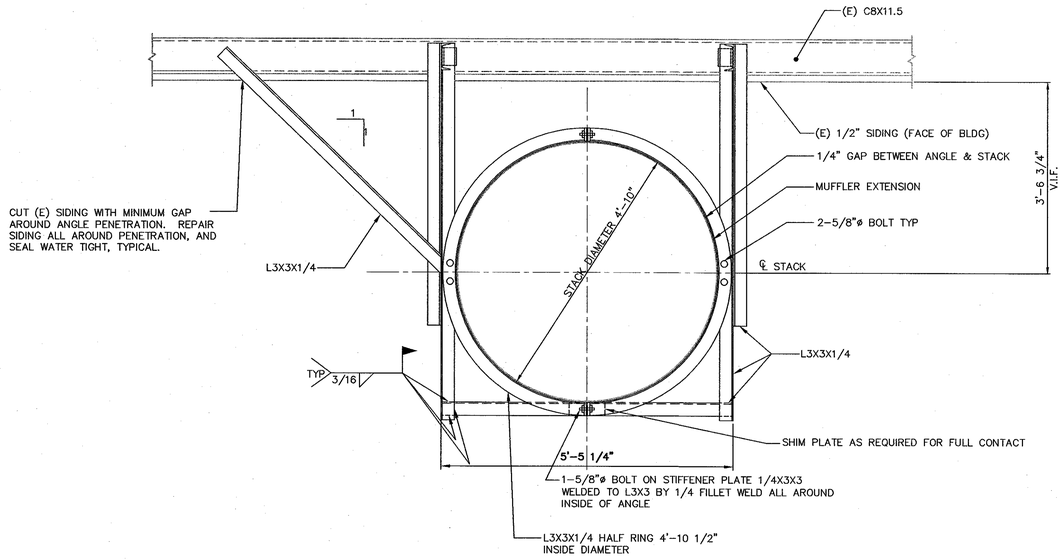

A S5 S6 MUFFLER EXTENSION DETAIL
SCALE: 3/4" = 1'-0"

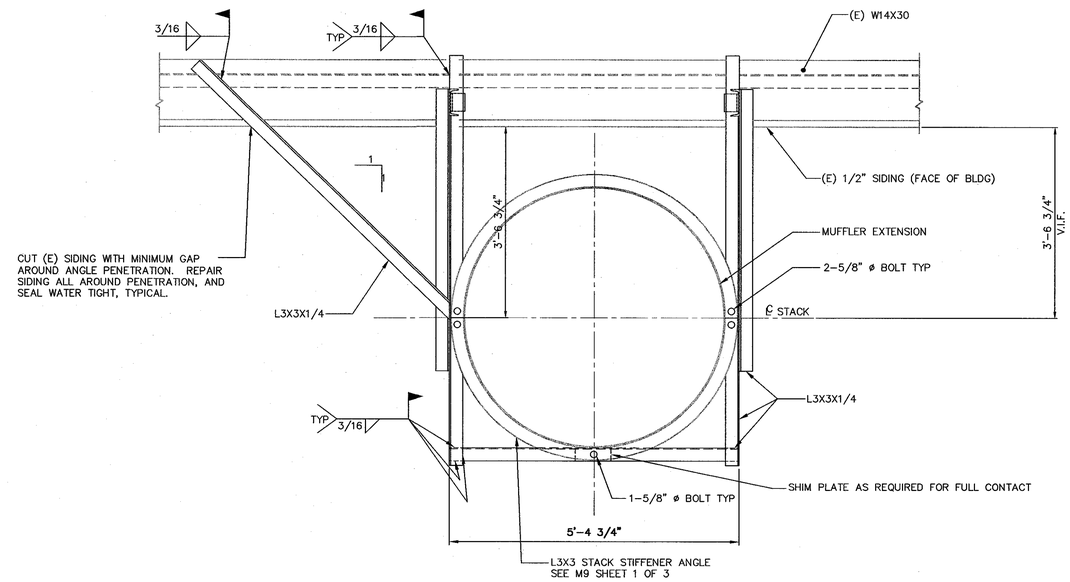

B S5 S6 MUFFLER EXTENSION DETAIL
SCALE: 3/4" = 1'-0"

Approved for Construction
Moffett Field Permit Board

Chief Building Official
Permit No. 10P003

ZONE	LETTER	DESCRIPTION	DRAWN	DATE	APPRVD

REVISIONS

DRAWN F.BONALDI		DATE 4/22/10
DESIGNED A.FIROUZ		DATE 4/22/10
CHECKED R.HAWTHORNE	for A.F.	DATE 4/22/10
PROJMGR M.CALLAHAN		DATE 4/22/10
REQUESTER J.BADOWKIN		DATE 4/22/2010
USER J.BALBONI		DATE 4/22/10
SAFETY D.FRASER		DATE 4/22/10
SUPERVISOR S.FRANKEL		DATE 5-5-10
REVIEWED W.LEE		DATE 4/27/10

REGISTERED PROFESSIONAL ENGINEER
AKTA FIROUZ
No. 2035
Exp 3/31/2012
STRUCTURAL
STATE OF CALIFORNIA

Ames Research Center
Moffett Field, California

N234A SVS DEAERATOR/FEEDWATER TANK REPLACEMENT
STRUCTURAL

MUFFLER EXTENSION DETAILS

SIZE	CAGE CODE	REV
D	25307	A 234A-1000-S6

SCALE | INDEX | SHEET | OF

FILE NAME: 234A-S06 04-22-2010

DWG: R:\234A\68046725.0001 (K80056) Feed Water Deaerator\500_CAD\FEEDWATER\S\Sheet\234A-S06.dwg Version: 17.1s (LMS Tech) User: wbonaldi
DATE: Apr 22, 2010 - 3:18:40 pm

DWG NO. A234A-1000-M1 | SH. | REV

PIPING AND PRESSURE VESSEL GENERAL NOTES

1. DESIGN, FABRICATE, INSTALL, INSPECT, AND TEST ALL NEW PIPING AND TUBING IN ACCORDANCE WITH ASME B31.3-2008 NORMAL SERVICE PIPING. DESIGN AND FABRICATE FEEDWATER STORAGE/DEAERATOR TANK TO ASME B&PVC SECTION VIII, DIV. 1, CURRENT EDITION AND ADDENDA. SEE DESIGN-BUILD PACKAGE SPECIFICATIONS ON SHEET M2.
2. QUALIFICATION OF CONTRACTOR: PERFORM ALL PIPING FABRICATION AND INSTALLATION OF PRESSURE COMPONENTS BY A FABRICATOR AUTHORIZED BY ASME TO APPLY THE "U" OR "PP" STAMP. PERFORM ALL WORK IN STRICT ACCORDANCE WITH THE QUALITY ASSURANCE MANUAL OF THE PERFORMING FABRICATOR. SUBMIT QUALIFICATIONS AND QUALITY ASSURANCE MANUAL FOR APPROVAL.
3. QUALIFICATION OF WELDING PROCEDURE: QUALIFICATION OF THE WELDING PROCEDURES SHALL CONFORM TO THE REQUIREMENTS OF THE ASME B31.3-2008 PROCESS PIPING AND BOILER & PRESSURE VESSEL CODE (BPVC) SECTION VIII, DIV.1 AND IX. PERFORM WELDING USING LOW HYDROGEN ELECTRODES. WHERE THERE IS NO ACCESS TO THE BACK SIDE OF THE WELD, PERFORM ROOT PASS USING TIG PROCESS WITH INERT GAS PURGE. ALL BUTT WELDS SHALL BE FULL PENETRATION WELDS, UNLESS OTHERWISE NOTED. FOLLOW ASME B31.3 RECOMMENDED PRE-HEATING PROCEDURES.
4. QUALIFICATION OF WELDERS: PERFORM ALL WELDING BY WELDERS CERTIFIED IN ACCORDANCE WITH SECTION IX OF THE ASME CODE AND IN STRICT ACCORDANCE WITH A QUALIFIED WELDING PROCEDURE SPECIFICATION (WPS) AND PROCEDURE QUALIFICATION RECORD (PQR) FOR THE APPLICABLE MATERIAL, THICKNESS AND POSITION.
5. NON-DESTRUCTIVE EXAMINATION REQUIREMENT: ALL PRESSURE PIPING WELDMENT ROOT PASS AND COVER PASSES SHALL BE MAGNETIC PARTICLE TESTED (CARBON STEEL), OR LIQUID PENETRANT TESTED (STAINLESS STEEL) AND INSPECTED BY QUALIFIED (LEVEL II) INSPECTORS IN ACCORDANCE WITH ASME B31.3-2008. FIVE PERCENT OF ALL FULL PENETRATION WELDED PIPING JOINTS SHALL BE RADIOGRAPHICALLY EXAMINED, INCLUDING AT LEAST 5% OF SHOP WELDS AND 5% OF FIELD WELDS AND AT LEAST ONE WELD FROM EACH WELDER IN ACCORDANCE WITH ASME B31.3. PRESSURE VESSEL WELDING SHALL BE FULL RT IN ACCORDANCE WITH PART UW OF ASME SECTION VIII. ACCEPTANCE CRITERIA SHALL BE IN ACCORDANCE WITH ASME BOILER AND PRESSURE VESSEL CODE (BPVC) SECTION VIII FOR VESSELS, AND ASME B31.3-2008 FOR PROCESS PIPING. FINAL ACCEPTANCE OF THE EXAMINATION RESULTS SHALL BE BY COTR.
6. MODIFICATIONS TO EXISTING PIPING: CONTRACTOR SHALL BE RESPONSIBLE FOR MODIFICATIONS NECESSARY TO CONNECT NEW EQUIPMENT. MODIFICATIONS ARE SUBJECT TO APPROVAL BY COTR. ALL PIPING COMPONENTS SHALL BE SUITABLE FOR THE PRESSURE, TEMPERATURE AND SERVICE.
7. INSTALLATION: ALL FLANGE ASSEMBLIES SHALL CONFORM TO ASME B16.5. TORQUE OR TIGHTEN FLANGES TO CONFORM ASME PCC-1. TORQUE OR TIGHTEN ALL NEW VALVES, FLANGES, HOSES, AND SWAGED-TYPE FITTINGS PER MANUFACTURER INSTALLATION INSTRUCTIONS AND RECOMMENDATIONS. BOLTS AND STUDS MUST HAVE MINIMUM TWO FULL THREADS BEYOND NUT AFTER ASSEMBLY. MATING BLIND FLANGES SHALL BE SAME MATERIAL AS FLANGES. PROVIDE ALL LABOR FOR FLUSHING, AND TESTING.
8. PIPING & FITTINGS MATERIAL:
   - PIPING: ASTM A106, GRADE B, ASME B36.10M.
   - FITTINGS: ASTM A234, GRADE WPB, ASME B16.9 (WELDED)
   - FLANGES: ASTM A105, ASME B16.5, CLASS 150 RF, SCH 40 BORE, WELDING NECK STYLE
   - BLIND FLANGES: ASTM A105, ASME B16.5, CLASS 150 RF, COMPATIBLE WITH MATING FLANGE
   - GASKETS: ASME B16.5, COMPRESS NON-ASBESTOS, ASTM F104, TYPE 7-P1161A FOR RAISED FACE FLANGES
   - BOLTING: BOLT: ASTM A193, GRADE B7, HEX NUTS: ASTM A194, GRADE 2H
   - WELDING: ALL PIPING AND FITTINGS SHALL BE FULL PENETRATION BUTT WELDED, UON.
   - PADDLE BLINDS: ASME B16.48, CLASS 150
   - OTHER: ALL COMPONENTS AND FITTINGS SHALL COMPLY WITH A LISTED SPECIFICATION IN ASME B31.3, TABLE 326.1, UNLESS SPECIFIED OTHERWISE.
9. PAINTING: STAINLESS STEEL COMPONENTS SHALL NOT BE PAINTED. SHOP-CLEAN NEW CARBON STEEL PIPE TO SSPC-SP6. PRIME WITH AMERON DIMETCOTE 9H ZINC PRIMER, AND APPLY AMERON AMERCOAT 240 EPOXY TOP COATING WITH MINIMUM DRY FILM THICKNESS OF 0.0029"-0.0042" IN COLOR PER SECTION 15000. CONFORM TO REGIONAL AIR DISTRICT (BAAQMD) RULE 8 FOR VOC CONTENTS OF ALL PAINTING PRODUCTS.
10. PIPING PRE-CLEANING: PURGE ALL NEW PIPING WITH SHOP AIR AFTER FABRICATION AND BEFORE THE FINAL CLOSE-OUT WELD OR FINAL BOLT-UP IS MADE. PURGE AT A MINIMUM AIR VELOCITY OF 15 FEET PER SECOND UNTIL NO FOREIGN MATTER, WATER, OR OIL IS VISIBLE AT PIPE EXIT. CAP CLEANED PIPING AT BOTH ENDS FOR SHIPMENT TO AVOID ENTRY OF FOREIGN MATTER INSIDE PIPE.
11. PIPING PREPARATION PRIOR TO PRESSURE TEST:
    A. CHECK PIPE SYSTEM FOR COMPLIANCE WITH THE CONTRACT DRAWINGS AND SPECIFICATIONS.
    B. EXAMINE PIPING SYSTEM AFTER FABRICATION AND ASSEMBLY OF PIPING TO ENSURE THAT PIPES ARE FREE OF FOREIGN MATERIALS.
    C. SUPPLY AND INSTALL HIGH POINT VENTS AND LOW POINT DRAINS IN PIPES FOR HYDROSTATIC TESTING. PROVIDE ½" BLEED VENT VALVES TO RELEASE TRAPPED AIR, AND ½" DRAIN VALVES TO PURGE PIPES. VENT AND DRAIN VALVES SHALL CERTIFIED PER ASME B16.34.
    D. ZERO LEAKAGE IS REQUIRED. TEST BOUNDARIES SHOULD NOT INCLUDE VALVES WHICH COULD LEAK DURING TEST.
12. HYDROSTATIC PRESSURE TEST PROCEDURE (FOR PIPING ONLY):
    A. PERFORM ALL TESTING IN ACCORDANCE WITH ASME B31.3 PROCESS PIPING CODE AND ASME SECTION VIII WITH ALL JOINTS EXPOSED, BEFORE ANY PIPE WRAP OR INSULATION IS APPLIED.
    B. PIPE METAL AND TEST FLUID TEMPERATURE SHALL BE 50°F, OR GREATER, AT TIME OF PRESSURE TESTING. IF AMBIENT CONDITIONS ARE BELOW 50°F, HEAT WELD AREAS NOT PREVIOUSLY PRESSURE TESTED TO BETWEEN 50° AND 100°F.
    C. OPEN ALL VALVES WITHIN HYDROSTATIC TEST BOUNDARIES, DURING TEST.
    D. PRESSURE TEST ALL NEW OR MODIFIED EXISTING PRESSURE PIPING FOR 10 MINUTES AT TEST PRESSURE WITH NO LEAKAGE. ANY LEAKS SHALL BE REPAIRED, AND PRESSURE TEST REPEATED. REFER TO SHEET M10 FOR HYDROTEST BOUNDARIES AND TEST PRESSURES.
    E. TEST FIELD CLOSURE WELDS USING "EXPANSION SEAL TECHNOLOGIES" FLANGE WELD TEST PLUG, OR APPROVED EQUAL.
    F. TEST SHALL BE WITNESSED BY AMES PRESSURE SYSTEM SAFETY ENGINEER OR TECHNICAL REPRESENTATIVE. ARC FORM 342 OR EQUIVALENT SHALL BE COMPLETED.
13. TEST RECORDS: PREPARE AND SUBMIT TEST REPORTS TO COTR FOR ALL PIPING SYSTEMS AND VESSELS REQUIRING HYDROSTATIC AND NONDESTRUCTIVE EXAMINATION TEST. SUBMIT TEST REPORTS AND RADIOGRAPHIC FILMS TO THE COTR FOR FINAL ACCEPTANCE WITHIN 3 DAYS OF TEST COMPLETION. TEST REPORTS AND RADIOGRAPHIC FILMS SHALL BECOME PROPERTY OF THE GOVERNMENT.
14. SEISMIC DESIGN CRITERIA (DESIGN-BUILD PIPING, SUPPORTS AND BRACING): DESIGN PER ASME B31.3 WITH MINIMUM SEISMIC LOADS PER CBC 2007 AND ASCE7-05, CHAPTER 15. INCLUDE THE FOLLOWING REQUIREMENTS:
    A. RESPONSE MODIFICATION FACTOR (R) = 1.0
    B. OCCUPANCY IMPORTANCE FACTOR (I) = 1.5
15. WIND DESIGN: DESIGN FOR WIND LOADS PER ASCE7 WITH IMPORTANCE FACTOR = 1.15.

GENERAL REFERENCE LEGEND

SECTION — A over A1|A2; PHOTO — 1 over A1|A5; DETAIL — 1 over A1|A2

GRAPHIC REFERENCE DESCRIPTION
- REFERENCE IDENTIFICATION NUMBER
- SHEET WHERE SHOWN
- SHEET FROM WHICH REFERENCED

TEXT REFERENCE DESCRIPTION
- 1/A2 — SHEET WHERE REFERENCE IS SHOWN
- REFERENCE IDENTIFICATION NUMBER

MECHANICAL GENERAL NOTES

1. MECHANICAL WORK SHALL CONFORM TO SPECIFICATIONS ON ALL DRAWINGS AND SPECIFICATIONS LISTED ON SHEET G2. ALL WORK SHALL BE NEW, UNLESS OTHERWISE INDICATED. SEE SHEET M2 FOR ADDITIONAL SPECIFICATIONS. SUPERVISE AND DIRECT THE WORK INCLUDING ALL CONSTRUCTION MEANS, METHODS, TECHNIQUES, SEQUENCES AND PROCEDURES. DESIGN, INSTALL AND ASSURE SAFETY OF ALL TEMPORARY BRACES AND SUPPORTS.
2. SAFETY: PROVIDE SAFE WORK AREA DURING ENTIRE CONSTRUCTION PERIOD. PROTECT ADJACENT PROPERTIES AND UTILITIES IN ACCORDANCE WITH ALL NATIONAL, STATE AND LOCAL SAFETY ORDINANCES. SEE G1 FOR ADDITIONAL SAFETY REQUIREMENTS.
3. WARRANTY: WARRANT ALL MATERIALS, EQUIPMENT AND WORKMANSHIP FOR A PERIOD OF ONE (1) YEAR FROM THE DATE OF FINAL ACCEPTANCE BY GOVERNMENT. REPLACE ANY FAULTY MATERIALS, EQUIPMENT OR WORKMANSHIP WITHOUT CHARGE TO THE GOVERNMENT DURING WARRANTY PERIOD.
4. SCHEDULE: SUBMIT WORK SCHEDULE WITH PROPOSED SHUTDOWNS FOR APPROVAL. DO NOT OPERATE ANY UTILITIES WITHOUT PRIOR PERMISSION FROM COTR. REQUEST FOR UNSCHEDULED UTILITY SHUTDOWNS MUST BE RECEIVED BY COTR AT LEAST 3 DAYS PRIOR TO SHUTDOWN.
5. RECORD DRAWINGS: MAINTAIN RECORDED "AS-BUILT" INFORMATION ON ALL EXISTING SERVICES UNCOVERED DURING CONSTRUCTION, AND ALL NEW SERVICES BEING INSTALLED. INCLUDE FINAL VALVE AND INSTRUMENT TAGS NUMBERS. CLEARLY MARK "AS-BUILT" INFORMATION IN COLOR ON A REPRODUCIBLE PRINT OF CONTRACT DRAWINGS. SUBMIT RECORDED "AS-BUILT" INFORMATION PRIOR TO JOB COMPLETION AND PROJECT CLOSEOUT.
6. SUBMITTALS: SUBMIT TO COTR FOR APPROVAL PRIOR TO START OF WORK. SUBMIT PRODUCT DATA AND SHOP DRAWINGS. SUBMIT REPORTS FOR ALL TESTS. SUBMIT COMMISSIONING PLAN. INCLUDE ALL SPECIFIED SUBMITTALS.
7. COORDINATION: COORDINATE WORK AND INSTALLATION BETWEEN ALL TRADES.
8. DIMENSIONS: DIMENSIONS ON DRAWING ARE FOR REFERENCE ONLY. FIELD VERIFY ALL EXISTING SIZES, CONDITIONS, ELEVATIONS AND DIMENSIONS BEFORE BEGINNING CONSTRUCTION OR ORDERING MATERIALS. NOTIFY COTR IMMEDIATELY IF ANY FIELD CONDITIONS ENCOUNTERED CONFLICT WITH INFORMATION ON PLANS.
9. EXISTING MECHANICAL: EXISTING PIPING IS SHOWN ONLY WHERE NECESSARY TO ESTABLISH RELATIONSHIPS OR CONNECTION POINTS WITH NEW WORK. NOT ALL EXISTING PIPES AND EQUIPMENT ARE SHOWN. VERIFY EXACT SIZE, LOCATION AND MATERIAL OF EXISTING SERVICES AT PROJECT SITE. MAINTAIN REQUIRED CLEARANCES TO EXISTING MECHANICAL AND ELECTRICAL EQUIPMENT.
10. BASIS OF DESIGN: EQUIPMENT LOCATION AND SERVICE ACCESS ILLUSTRATED ON PLANS ARE THE BASIS OF DESIGN. IF ACTUAL SPACE REQUIREMENTS FOR APPROVED EQUIPMENT DIFFERS FROM BASIS OF DESIGN, PROVIDE ALL ADJUSTMENTS REQUIRED FOR A FULLY FUNCTIONAL SYSTEM, AND COORDINATE ALL CONNECTING SERVICES WITHOUT ADDITIONAL COST TO GOVERNMENT.
11. STRUCTURAL: CUTTING, DRILLING OR MODIFYING ANY EXISTING STRUCTURAL MEMBERS, BEAMS OR WALLS IS FORBIDDEN WITHOUT PRIOR APPROVAL FROM THE COTR.
12. EQUIPMENT INSTALLATION: INSTALL AND COMMISSION PER MANUFACTURER'S RECOMMENDATIONS AND WRITTEN INSTRUCTIONS, IN ACCORDANCE WITH LISTING REQUIREMENTS, AND WITH MINIMUM CLEARANCES FOR SERVICE AND REPAIR. SUPPORT AND ANCHOR ALL EQUIPMENT. INSTALL PIPE REDUCERS AND OFFSETS WHERE REQUIRED FOR FINAL CONNECTION TO EQUIPMENT.
13. PIPE SUPPORT AND BRACING: COMPLY WITH ASME B31.3-2008, AND MSS SP-58. SUPPORT AND BRACE ALL NEW PIPING FROM STRUCTURE OR FOUNDATIONS. REFER TO PIPE SUPPORT SCHEDULE. SUPPORT TYPES LISTED ARE REFERENCED TO MSS SP-58, UON. SUPPORTS INCLUDE ANCHORS, ADHESIVE, EPOXY, HANGERS, CLAMPS, GROUTING, SHIMS, ETC. PROVIDE ROD STIFFENERS ON HANGERS OVER 19 INCH IN LENGTH. MAINTAIN 1" MINIMUM CLEARANCE BETWEEN PIPES AND ADJACENT FINISHES AND DEVICES.
14. PIPE INSTALLATION: SIZES SHOWN ON THE DRAWINGS ARE NOMINAL. REAM ENDS TO FULL SIZE AFTER CUTTING. MAKE ALL HORIZONTAL REDUCTIONS IN PIPE SIZE WITH ECCENTRIC REDUCERS. INSTALL WITH TOP SIDE FLAT IN WATER PIPING, AND BOTTOM SIDE FLAT IN STEAM PIPING. DO NOT INSTALL WATER PIPING ABOVE ELECTRICAL EQUIPMENT. INSTALL HORIZONTAL PIPING WITH MINIMUM 7'-0" HEADROOM CLEARANCE, UON.
15. DEMOLITION: REMOVE FROM THE PREMISES AND DISPOSE OF ALL ITEMS IDENTIFIED TO BE REMOVED OR DEMOLISHED, UNLESS OTHERWISE NOTED. REMOVE PIPING TO POINT OF DISCONNECTION SHOWN ON PLANS. COVER OPEN ENDS TO PREVENT ENTRY OF DIRT OR DEBRIS INTO PIPE WHICH HAS BEEN CUT. CONDUCT DEMOLITION TO MINIMIZE DAMAGE TO EXISTING MATERIALS AND FINISHES TO REMAIN. REPAIR DAMAGED FINISHES TO MATCH ADJACENT FINISHES. DISPOSE OF MERCURY THERMOMETERS AS REQUIRED BY NASA REGULATIONS. RECORD 13 DIGIT NASA EQUIPMENT NUMBER ON ALL (E) EQUIPMENT TO BE DEMOLISHED, AND SUBMIT NUMBERS TO COTR.
16. VALVE INSTALLATION: ALL VALVES AND PIPING SYSTEM SPECIALTIES SHALL BE FULL-LINE SIZE, UNLESS OTHERWISE INDICATED. PROVIDE CHAIN OPERATOR FOR VALVES INSTALLED OVER 7'-0" AFF. INSTALL VALVES WITH STEM AT OR ABOVE CENTERLINE OF HORIZONTAL PIPE. INSTALL VALVE SO ACTUATOR HAS SUFFICIENT CLEARANCE FOR PROPER OPERATION. FURNISH AND INSTALL VALVES WHERE INDICATED ON PLANS, AND FOR SHUT-OFF SERVICE AT EACH PIECE OF EQUIPMENT.
17. INSTRUMENTS: INSTALL THERMOMETERS, GAGES AND INSTRUMENTATION IN VISIBLE LOCATIONS.
18. CLEAN NEW PIPING WITH PIPE CLEANING SOLUTION. CLEAN, FLUSH AND NEUTRALIZE PIPING THOROUGHLY PER CLEANING PRODUCT MANUFACTURER'S INSTRUCTIONS. COMPLETE CLEANING BEFORE LEAK TESTING.
19. PIPING LEAK TEST: LEAK TEST COMPLETE ASSEMBLY AT 100 PERCENT OF MAXIMUM OPERATING PRESSURE. SCHEDULE TEST WITH COTR, AND CONFIRM TEST TIME NO LESS THAN 24 HOURS BEFORE LEAK TEST BEGINS. ANY LEAKS SHALL BE REPAIRED, AND PRESSURE TEST REPEATED.
20. GAS PIPING: INSTALL, SUPPORT, BRACE AND TEST PER NFPA 54. PIPE: ASTM A 53 STEEL, SCHEDULE 40 BLACK SEAMLESS. FITTINGS: ASME B16.9 BUTTWELDED. JOINTS: SHIELDED METAL-ARC WELDED PER ASME B31.8. WELDERS: CERTIFIED ASME B31.8 QUALIFICATION TEST REPORT. PROTECTIVE COATING: PAINT PIPING YELLOW ABOVEGROUND. WRAP UNDERGROUND PIPING PER NFPA 54. TEST AT 50 PSIG FOR 1/2 HOUR, AND PURGE.
21. TESTING & COMMISSIONING: PROVIDE FUNCTIONAL TEST OF ALL NEW EQUIPMENT AND CONTROLS PRIOR TO CONNECTION WITH EXISTING PLANT. PROVIDE SUPERVISED STARTUP OF DEAERATOR BY FACTORY REPRESENTATIVE. SCHEDULE STARTUP AND ACCEPTANCE TEST WITH BOILER PLANT PERSONNEL.
22. EARTHWORK: BEFORE EARTHWORK IS STARTED, LOCATE UNDERGROUND UTILITIES BY ELECTROMAGNETIC OR RADIO FREQUENCY LINE LOCATORS BEFORE DIGGING. PERFORM ALL SHORING AND EXCAVATION PER ASCS SECTION 01100, PART 3.3. PROVIDE SPILL PREVENTION AND CONTROL PER SAFETY PLAN IF UTILITY PIPES ARE BROKEN, AND NOTIFY COTR IMMEDIATELY. IF SATURATED SOILS ARE ENCOUNTERED DURING EXCAVATION, STOP WORK AND COORDINATE WITH COTR FOR GOVERNMENT SAMPLING AND ANALYSIS OF THE SOIL. LEGALLY DISPOSE OF UNSATISFACTORY SOIL OFF GOVERNMENT PROPERTY.
23. STORM AND INDUSTRIAL WASTE UTILITIES: REMOVE EXISTING PIPES WHERE SHOWN ON PLAN. REPLACE WITH NEW PIPING OF SAME MATERIAL TYPE AS EXISTING REPLACED PIPES. REROUTE PIPING AROUND FOUNDATION. INSTALL WITH CONSTANT SLOPE FROM UPSTREAM CONNECTION TO POINT OF DISCHARGE INTO EXISTING PIPING OR MANHOLE.

LEGEND & ABBREVIATIONS

(NOT ALL ITEMS ARE USED)

SYMBOL	DESCRIPTION
XX / X	EQUIPMENT TAG WITH SEQUENCE NUMBER
X	KEY NOTE TAG
(X)	HYDROSTATIC TEST BOUNDARY TAG
XXX-X	PIPE SUPPORT TAG WITH SEQUENCE NUMBER
	POINT OF CONNECTION
	POINT OF DISCONNECTION
	EXISTING MECHANICAL ITEM TO BE REMOVED
	EXISTING MECHANICAL ITEM TO REMAIN
	NEW MECHANICAL ITEM OR WORK
	CALIBRATED BALANCING VALVE (CIRCUIT SETTER)
	CHECK VALVE (CKV)
	FLEXIBLE PIPE CONNECTION (NEOPRENE TYPE)
	FLEXIBLE PIPE CONNECTION (BELLOWS TYPE)
	GATE VALVE
	BALL VALVE
	BALL VALVE (FLANGED)
	BUTTERFLY VALVE (BFV)
	BUTTERFLY VALVE (DOUBLE LINE)
	GLOBE VALVE
	PRESSURE REDUCING VALVE
	3-WAY CONTROL VALVE
	2-WAY CONTROL VALVE
M	MOTORIZED CONTROL VALVE
	PRESSURE RELIEF VALVE
	PUMP
	MANUAL AIR VENT
	PIPE REDUCER (ECCENTRIC)
	PIPE REDUCER (CONCENTRIC)
(P)	PRESSURE GAGE
	PRESSURE AND TEMPERATURE TEST PLUG
	SHUT-OFF COCK
	TRIPLE DUTY VALVE
	STRAINER WITH BLOW-DOWN VALVE
	BASKET STRAINER (SIMPLEX)
	ANSI FLANGED CONNECTION
	ORIFICE TYPE FLOW MEASURING STATION
	UNION CONNECTION
	THERMOMETER
	PIPE DOWN
	PIPE UP
	PIPE CAP
	STEAM TRAP ASSEMBLY
—W—	SITE COLD WATER (W)
— - —	DOMESTIC COLD WATER (DCW)
—DCW—	DOMESTIC COLD WATER (DCW)
—SCW—	SOFT COLD WATER (SCW)
—RO—	REVERSE OSMOSIS RECLAIMED WATER (RO)
—G—	FUEL GAS (NATURAL OR PROPANE)
—D—	DRAIN
—IW—	INDUSTRIAL WASTE (IW)
—SD—	STORM DRAIN (SD)
—CF—	CHEMICAL FEED (CF)
—AR—	ARGON (AR)
—VAC—	VACUUM (VAC)
—BFW—	BOILER FEEDWATER (BFW)
—BFR—	BOILER FEEDWATER RECIRCULATION (BFR)
—BFD—	BOILER FEEDWATER DRAIN (BFD)
—HPS—	HIGH PRESSURE STEAM (HPS)
—HPR—	HIGH PRESSURE CONDENSATE RETURN (HPR)
—LPS—	LOW PRESSURE STEAM (LPS)
—LPR—	LOW PRESSURE CONDENSATE RETURN (LPR)
—RVD—	RELIEF VALVE DISCHARGE (RVD)
—AHWS—	AUXILIARY HEATING WATER SUPPLY (AHWS)
—AHWR—	AUXILIARY HEATING WATER RETURN (AHWR)
—CTW—	COOLING TOWER WATER (CTW)

&	AND
@	AT
ø	ROUND OR DIAMETER
#	POUND OR NUMBER
A	AMPERE
(A)	ABANDONED
ACM	ASBESTOS CONTAINING MATERIAL
AFF	ABOVE FINISHED FLOOR
AFG	ABOVE FINISHED GRADE
AFUE	ANNUAL FUEL UTILIZATION EFFICIENCY
AG	AIR GAP
AHWS	AUXILIARY HEATING WATER SUPPLY
AHWR	AUXILIARY HEATING WATER RETURN
AL	ALUMINUM
AMB	AMBIENT TEMPERATURE
ANSI	AMERICAN NATIONAL STANDARDS INSTITUTE
AP	ACCESS PANEL
APD	AIR PRESSURE DROP ("WG)
ASCS	AMES STD CONSTRUCTION SPECIFICATIONS
ASHRAE	AMERICAN SOCIETY OF HEATING REFRIGERATING AND AIR CONDITIONING ENGINEERS
ASME	AMERICAN SOCIETY OF MECHANICAL ENGINEERS
ASTM	AMERICAN SOCIETY FOR TESTING AND MATERIALS
AV	ATMOSPHERIC VENT
AVG	AVERAGE
BAAQMD	BAY AREA AIR QUALITY MANAGEMENT DISTRICT
B&PVC	BOILER & PRESSURE VESSEL CODE
BBFV	BALANCING BUTTERFLY VALVE
BF	BLIND FLANGE
BFP	BACKFLOW PREVENTER
BFW	BOILER FEEDWATER
BFV	BUTTERFLY VALVE
BHP	BRAKE HORSEPOWER
BLDG	BUILDING
BOP	BOTTOM OF PIPE
BSS	BASE SPRING SUPPORT
BTU	BRITISH THERMAL UNIT
BTUH	BTU PER HOUR
BV	BALL VALVE
BW	BUTT WELD
CF	CHEMICAL FEED
CFF	CAP FOR FUTURE CONNECTION
CFM	CUBIC FEET PER MINUTE
CKV	CHECK VALVE
CO	CLEANOUT
COL	COLUMN
CONC	CONCRETE
COTR	CONTRACTING OFFICER'S TECHNICAL REPRESENTATIVE
CTE	CONNECT TO EXISTING
CTW	COOLING TOWER WATER
CU FT	CUBIC FEET
CU IN	CUBIC INCH
D	DRAIN
DAH	DEAERATING HEATER
dB	DECIBEL
DAH	DEAERATOR/FEEDWATER HEATER
DB	DRY BULB
DEFL	DEFLECTION
DCW	DOMESTIC COLD WATER
DIA	DIAMETER
DISCH	DISCHARGE
DIV	DIVISION
DOE	U.S. DEPARTMENT OF ENERGY
DWG	DRAWING
(E)	EXISTING
EA	EACH
EAT	ENTERING AIR TEMPERATURE
EFF	EFFICIENCY
EL	ELEVATION
ELEC	ELECTRICAL
EQ	EQUAL
EQPT	EQUIPMENT
ESP	EXTERNAL STATIC PRESSURE
ET	EXPANSION TANK
EWT	ENTERING WATER TEMPERATURE
EXP	EXPANSION
EXT	EXTERNAL
°F	DEGREES FAHRENHEIT
(F)	FUTURE
F&T	FLOAT & THERMOSTATIC STEAM TRAP
FACP	FIRE ALARM CONTROL PANEL
FC	FLEXIBLE CONNECTION
FFD	FUNNEL FLOOR DRAIN
FIG	FIGURE
FLA	FULL LOAD AMPERE
FMCS	FACILITY MANAGEMENT CONTROL SYSTEM
FPM	FEET PER MINUTE
FPS	FEET PER SECOND
FSM	FACILITY SAFETY MANAGER
FT (')	FEET
FTG	FOOTING
FW	FEEDWATER
FWD	FEEDWATER DRAIN
FWR	FEEDWATER RETURN
FWDA	FEEDWATER DEAERATING SYSTEM
WG	FEET WATER GAUGE
G	GAS
GA	U.S. GAUGE (OR GAGE)
GAL	GALLONS
GALV	GALVANIZED
GBV	GLOBE VALVE
GCO	GRADE CLEANOUT
GFE	GOVERNMENT FURNISHED EQPT
GI	GALVANIZED IRON
GLV	GLOBE VALVE
GN	GENERAL NOTE
GPH	GALLONS PER HOUR
GPM	GALLONS PER MINUTE
GRD	GROUND
GSM	GALVANIZED SHEET METAL
GV	GATE VALVE
H	HEIGHT
HD	HEAD
HGT	HEIGHT
H-O-A	HAND-OFF-AUTOMATIC SWITCH
HORZ	HORIZONTAL
HP	HORSEPOWER
HR	HOURS
HTB	HYDROSTATIC TEST BOUNDARY
HPS	HIGH PRESSURE STEAM
HZ	FREQUENCY (HERTZ)
IAW	IN ACCORDANCE WITH
IB	INERTIA BASE
ICF	INSTANTANEOUS CIRCUIT FLOW (MAXIMUM AMPS)
ICW	INDUSTRIAL COLD WATER
ID	INSIDE DIAMETER
IE	INVERT ELEVATION
IN (")	INCHES
"WG	INCHES WATER GAUGE
IPS	IRON PIPE (THREAD) SIZE
IVB	INVERTED BUCKET STEAM TRAP
IW	INDUSTRIAL WASTE
KN	KEY NOTE
KW	KILOWATTS
KWH	KILOWATT-HOUR
LB, LBS	POUNDS
LCV	LEVEL CONTROL VALVE
LPS	LOW PRESSURE STEAM
LR	LONG RADIUS ELBOW
LRA	LOCKED ROTOR AMPERE
LWT	LEAVING WATER TEMPERATURE
MAX	MAXIMUM
MAWP	MAXIMUM ALLOWABLE WP
MBH	THOUSAND BTU PER HOUR
MBFV	MOTORIZED BUTTERFLY VALVE
MCA	MINIMUM CIRCUIT AMPACITY
MC	MOTOR CONTROL
MCC	MOTOR CONTROL CENTER
MECH	MECHANICAL
MER	MECHANICAL EQUIPMENT ROOM
MFR	MANUFACTURER
MFS	MAXIMUM FUSE SIZE
MH	MANHOLE
MHP	MOTOR HORSEPOWER
MIN	MINIMUM
MISC	MISCELLANEOUS
MOCP	MAXIMUM OVERLOAD CIRCUIT PROTECTION
MOV	MOTOR OPERATED VALVE
MPa	MEGAPASCAL
MS	MOTOR STARTER
MTD	MOUNTED
N/A	NOT APPLICABLE
N/C	NORMALLY CLOSED
NDE	NON-DESTRUCTIVE EXAMINATION
NEC	NATIONAL ELECTRIC CODE (NFPA 72)
NEMA	NATIONAL ELECTRICAL MANUFACTURERS ASSOCIATION
NFPA	NATIONAL FIRE PROTECTION ASSOCIATION
NIC	NOT IN CONTRACT
NO.	NUMBER
N/O	NORMALLY OPEN
NPSH	NET POSITIVE SUCTION HEAD
NPT	NATIONAL PIPE THREAD
OAS	OR ACCEPTABLE SUBSTITUTE
OC	ON CENTER
OD	OUTSIDE DIAMETER
ODP	OPEN DRIP PROOF
OPER	OPERATING
OSA	OUTSIDE AIR
OSHA	OCCUPATIONAL SAFETY AND HEALTH ACT
OS&Y	OUTSIDE SCREW AND YOKE
OV	OUTLET VELOCITY
PA	PIPE ANCHOR
PEX	CROSS-LINKED POLYETHYLENE
PFF	PLUG FOR FUTURE
PG	PRESSURE GAUGE
PH	ELECTRICAL PHASE
PL	PLATE
PLC	PROGRAMMABLE LOGIC CONTROLLER
POC	POINT OF CONNECTION
POD	POINT OF DISCONNECTION
PP	POLYPROPYLENE
PPH	POUNDS PER HOUR
PPM	PARTS PER MILLION
PRV	PRESSURE REDUCING VALVE (ASSEMBLY)
PSF	POUNDS PER SQUARE FOOT
PSI	POUNDS PER SQUARE INCH
PSIA	PSI (ABSOLUTE)
PSIG	PSI (GAUGE)
PT	PARTICLE WELD TEST (MAG OR LIQUID)
PTT	PRESSURE & TEMPERATURE TEST PLUG
PVC	POLYVINYL CHLORIDE
(R)	RELOCATED
REF	REFERENCE ONLY (FIELD VERIFY)
REV	REVISION
RLA	RUNNING (RATED) LOAD AMPERES
RPM	REVOLUTIONS PER MINUTE
RPZ	REDUCED PRESSURE ZONE BACKFLOW PREVENTION ASSEMBLY
RT	RADIOGRAPHIC WELD TEST
RV	RELIEF VALVE
SCH	PIPE SCHEDULE
SCW	SOFTEN COLD WATER
SD	STORM DRAIN
SF	SQUARE FEET
SG	SPECIFIC GRAVITY
SH	SPRING HANGER
SN	SHEET NOTE
SOF	SLIP-ON FLANGE
SOV	SHUTOFF VALVE (MANUAL)
SQ	SQUARE
SQ IN	SQUARE INCHES
SP	STATIC PRESSURE
SPEC	SPECIFICATION
SR	SHORT RADIUS ELBOW
SRV	SAFETY RELIEF VALVE
SS	STAINLESS STEEL
STD	STANDARD
SUCT	SUCTION
SVS	STEAM VACUUM SYSTEM
SW	SOCKET WELD
TCV	TEMPERATURE CONTROL VALVE
TDH	TOTAL DYNAMIC HEAD
TEFC	TOTALLY ENCLOSED FAN COOLED
TEMP	TEMPERATURE
TSP	TWISTED SHIELDED PAIR
TYP	TYPICAL
UG	UNDERGROUND
UL	UNDERWRITER LABORATORIES
UNK	PIPE (UNKOWN SERVICE, MATERIAL AND SIZE)
UON	UNLESS OTHERWISE NOTED
USSG	UNITED STATES STANDARD GAUGE
V	VOLT
VA	VOLT-AMPERE
VAC	VACUUM
VB	VACUUM BREAKER
VEL	VELOCITY
VFD	VARIABLE FREQUENCY DRIVE
VOL	VOLUME
VTR	VENT TO ATMOSPHERE THROUGH ROOF
W	WATER
W/	WITH
W/O	WITHOUT
'WG	FT (WATER GAUGE) PRESSURE
WMS	WIRE MESH SCREEN
WNF	WELDING NECK FLANGE
WOG	WATER, OIL AND GAS
WP	WORKING PRESSURE
WPD	WATER PRESSURE DROP
WT	WEIGHT
(X2)	(TYPICAL OF 2)

Approved for Construction
Moffett Field Permit Board
Chief Building Official
Permit No. 10P003

REGISTERED PROFESSIONAL ENGINEER — MICHAEL S. CALLAHAN — M 21188 — MECHANICAL — STATE OF CALIFORNIA — Exp. 6/30/11

ZONE	LETTER	DESCRIPTION	DRAWN	DATE	APPRVD
		REVISIONS			

	DATE
DRAWN J.HO	4/12/2010
DESIGNED M.CALLAHAN	4/12/10
CHECKED P.WAN	4/12/10
PROJMGR M.CALLAHAN	4/12/10
REQUESTER J.BALDOVINO	04/14/2010
USER J.BALBONI	4/12/10
SAFETY D.FRASER	4/19/10
SUPERVISOR S.FRANKEL	4.14.10

Ames Research Center
Moffett Field, California

N234A SVS DEAERATOR/FEEDWATER TANK REPLACEMENT
MECHANICAL

GENERAL NOTES SYMBOLS & ABBREVIATIONS

SIZE D | CAGE CODE 25307 | A 234A-1000-M1 | REV
SCALE NONE | INDEX | SHEET | OF

FILE NAME: 234A-M01 | 04-12-2010

DWG: R:\234A\60046725.0001 (K80056) Feed Water Deaerator\500_CAD\FEEDWATER\M\Sheet\234A-M01_LEGEND.dwg Version: 17.1s (LMS Tech) User: jho
DATE: Apr 12, 2010 - 9:00:10 am

MECHANICAL SUPPLEMENTAL SPECIFICATIONS

1. MECHANICAL IDENTIFICATION: IDENTIFY NEW SYSTEMS PER ASCS. INCLUDE DIAGRAM AND LISTING OF EQUIPMENT. COLOR CODE (PAINT) OUTSIDE SURFACE OF NON-METALLIC INSULATION JACKETS.
2. EQUIPMENT PADS: PROVIDE REINFORCED CONCRETE EQUIPMENT HOUSEKEEPING PAD FOR ALL BASE MOUNTED EQUIPMENT, UON. FORM 1" CHAMFER ON ALL TOP EDGES. MINIMUM PAD HEIGHT IS 4" AFF, UON.
3. INSULATION: NON-ASBESTOS TYPE. SEAL ALL JACKET JOINTS AND SEAMS, AND PREVENT ANIMAL INFESTATION. INSTALL INSULATION INSERTS AND INSULATION SHIELD AT ALL INSULATED PIPE SUPPORTS, UNLESS OTHERWISE NOTED IN DETAILS.
4. WATER TREATMENT: WATER TREATMENT EQUIPMENT AND PIPING CONNECTIONS TO BE PROVIDED BY GOVERNMENT.
5. VALVES: CONFORM TO ASME B31.3.

   BALL VALVE: CARBON STEEL, FULL PORT, 285 PSI NON-SHOCK COLD WORKING PRESSURE, BLOWOUT-PROOF STEM, 316 STAINLESS STEEL STEM AND BALL, WITH ADJUSTABLE PACKING GLAND, FLANGED ENDS, SHALL CONFORM TO ASME B16.34, MSS SP-72. NIBCO #F-515-CS-F-66-FS OR APPROVED EQUAL.

   BUTTERFLY VALVE: DUCTILE IRON BODY, 200 PSIG NON-SHOCK COLD WORKING PRESSURE, ALUMINUM BRONZE DISC, EPDM LINER & SEAL, STAINLESS STEEL STEM WITH EXTENDED NECK, LUG STYLE FOR END OF LINE SERVICE (NO DOWNSTREAM FLANGE REQUIRED) ANSI CLASS 150 FLANGE CONNECTION, MANUAL LEVER OPERATOR 10-POSITION PLATE, SHALL CONFORM TO MSS SP-25, API 609. NOT FOR USE ON STEAM SERVICE. NIBCO #LD-2000 OR APPROVED EQUAL.

   GATE VALVE: BRONZE BODY, THREADED ENDS, CLASS 125, 125 PSIG SATURATED STEAM PRESSURE, 200 PSIG NON-SHOCK COLD WORKING PRESSURE, UNION BONNET, SOLID WEDGE. SHALL CONFORM TO MSS SP-80. NIBCO #T-124 OR APPROVED EQUAL.

   GATE VALVE: CAST IRON BODY, FLANGED ENDS, CLASS 125, 125 PSIG SATURATED STEAM PRESSURE (MAX. 100 PSIG FOR 14" TO 16", MAX. 50 PSIG FOR 18" AND LARGER), 200 PSIG NON-SHOCK COLD WORKING PRESSURE (2" TO 12"), 150 PSIG NON-SHOCK COLD WORKING PRESSURE (14" TO 24"), BOLTED BONNET, OS&Y, SOLID WEDGE, BRONZE MOUNTED. SHALL CONFORM TO MSS SP-70. NIBCO #F-617-O OR APPROVED EQUAL.

   GLOBE VALVE: CAST IRON BODY, FLANGED ENDS, CLASS 125, 125 PSIG SATURATED STEAM PRESSURE, 200 PSIG NON-SHOCK COLD WORKING PRESSURE, BOLTED BONNET, BRONZE MOUNTED, RENEWABLE SEAT AND DISC. SHALL CONFORM TO MSS SP-85. NIBCO #F-718-B, OR APPROVED EQUAL.

   MULTI-PORT RELIEF VALVE: 18" SIZE, CAST IRON BODY, 125 PSIG FLANGES, VERTICAL UPFLOW PATTERN, CHAINWHEEL ADJUSTABLE, 0-10 PSIG SPRING SET PRESSURE RANGE, 350°F MAXIMUM TEMPERATURE, BRONZE TRIM, REPLACEABLE RESILIENT SEATS, ALLOY STEEL SPRINGS. RELIEF CAPACITY OF 44,000 PPH AT 2.1 PSI INCREASE ABOVE A SET PRESSURE OF 10 PSIG. CRANE/COCHRANE FIGURE 1002, OR APPROVED EQUAL.

   BASKET STRAINER: CAST IRON BODY AND BOLTED COVER, CLASS 125, 125 PSIG SATURATED STEAM PRESSURE, 175 PSIG NON-SHOCK COLD WORKING PRESSURE, STAINLESS STEEL SCREEN WITH 0.125"ø PERFORATIONS, TAPPED DRAIN CONNECTION. METRAFLEX STYLE B-1-T, OR APPROVED EQUAL.

   CONTROL VALVE: 2-WAY, FLANGED ANSI CLASS 125 CAST IRON BODY, MINIMUM 200 PSIG NON-SHOCK COLD WORKING PRESSURE. BRONZE TRIM, STAINLESS STEEL STEM, METAL TO METAL SEAT WITH ANSI LEAKAGE CLASS IV (0.1% OF Cv), 100:1 RANGEABILITY, ELECTRIC ACTUATOR, SHALL CONFORM TO MSS SP-85.
6. PRESSURE GAUGES: 4½" DIAL, UON. CONFORM TO ASME B40.100. INSTALL GAUGE WITH PULSATION DAMPENER FOR WATER PIPE. INSTALL GAUGE WITH SIPHON FOR STEEL PIPE.
7. TESTING & COMMISSIONING: TEST PIPING PER PIPING GENERAL NOTES ON SHEET M1. SUBMIT AGENCY QUALIFICATIONS. PROVIDE FUNCTIONAL TEST OF ALL NEW EQUIPMENT AND CONTROLS PRIOR TO CONNECTION WITH EXISTING PLANT. PROVIDE SUPERVISED STARTUP OF DEAERATOR BY FACTORY REPRESENTATIVE. SCHEDULE STARTUP AND ACCEPTANCE TEST WITH BOILER PLANT PERSONNEL.
8. TITLE 24 (CALIFORNIA CODE OF REGULATIONS TITLE 24 PART 6) COMPLIANCE: CALIFORNIA ENERGY CODE REQUIREMENTS DO NOT APPLY TO THIS PROJECT. THIS PROJECT SUPPORTS A CRITICAL PROCESS LOAD WHICH IS NOT ASSOCIATED WITH COMFORT CONDITIONING OR DOMESTIC WATER HEATING.
9. APPROVED MANUFACTURERS:
   MANUFACTURERS NAMED ON DRAWINGS REFER TO ALL MANUFACTURERS FOR SIMILAR PRODUCTS. PRODUCT MUST BE EQUIVALENT IN MATERIAL, DIMENSIONS, FUNCTION AND APPLICATION AS THE NAMED PRODUCT:
   - ANCHOR BOLTS: HILTI, RAMSET/REDHEAD, SIMPSON, OR APPROVED EQUAL. PRODUCTS MUST HAVE EQUIVALENT RATED LOADS PER ICC-ES EVALUATION REPORT.
   - METAL FRAMING CHANNEL, PIPE GUIDES, PIPE CLAMPS: COOPER B-LINE, UNISTRUT, POWERSTRUT, OR APPROVED EQUAL. "B-LINE" REFERS TO COOPER B-LINE.
   - PRESSURE GAUGES: ASHCROFT, CROSBY, LONGEGAN, TAYLOR, TRERICE, U.S. GAUGE, OR APPROVED EQUAL.

DESIGN-BUILD SPECIFICATIONS

1. DESIGN, FABRICATE AND INSTALL ALL NEW EQUIPMENT, PIPING, PIPING SUPPORTS AND CONTROLS, EXCEPT AS NOTED BELOW UNDER BUILD-TO-PRINT:
2. BUILD-TO-PRINT: FABRICATE AND INSTALL THE FOLLOWING AS DETAILED ON PLAN:
   A. LOW PRESSURE STEAM (LPS) PIPING
   B. BOILER FEEDWATER (BFW) PIPING
   C. SOFTENED COLD WATER MAKE-UP (SCW) PIPING.
   D. FEEDWATER DRAIN (FWD) PIPING.
   E. ARGON PIPING
   F. LPS, BFW, FWD, AND SCW PIPING SUPPORTS WHICH ARE NOT ATTACHED TO DEAERATOR/FEEDWATER TANK STRUCTURE. REFER TO PIPE SUPPORT SCHEDULE ON SHEET M4 (2 OF 2).
3. DESIGN-BUILD CRITERIA AND SPECIFICATIONS: REFER TO ALL CONTRACT DOCUMENTS. REFER TO DEAERATING HEATER/FEEDWATER TANK PACKAGE SPECIFICATIONS ON SHEET M2. REFER TO PIPING AND PRESSURE VESSEL NOTES ON SHEET M1 FOR ADDITIONAL DESIGN-BUILD CRITERIA.
4. DESIGN-BUILD PORTIONS OF THIS PROJECT SHALL BE DESIGNED AND STAMPED BY A REGISTERED PROFESSIONAL ENGINEER. STRUCTURAL EQUIPMENT SUPPORTS AND PIPING SUPPORTS SHALL BE DESIGNED AND STAMPED BY A STRUCTURAL ENGINEER REGISTERED IN THE STATE OF CALIFORNIA.
5. DESIGN-BUILD PIPING ANALYSIS: PERFORM PIPING ANALYSIS TO DEMONSTRATE THAT DESIGN MEETS SPECIFIED CRITERIA, INCLUDING ASME B31.3. SUBMIT CALCULATIONS FOR APPROVAL.
6. SUBMIT STAMPED SHOP DRAWINGS AND STAMPED CALCULATIONS TO COTR AND PERMIT REVIEW BOARD FOR APPROVAL.

DEAERATOR/FEEDWATER HEATER

UNIT TAG	TYPE	BOILER PLANT CAPACITY PPH	DESIGN MAWP PSIG	RELIEF PSIG	DEAERATING HEATER STEAM				FEEDWATER			FEEDWATER TANK				OPER WT LBS	MFR & MODEL NO.	REMARKS
					INLET PSIG	ENTHALPY BTU/LB	FLOW PPH	INLET SIZE	GPM	EWT	LWT	OUTLET SIZE	TANK GAL	OVERFLOW GAL	OPERATING GAL			
DAH-1	SPRAY	250,000	30	15	7	1158	46K	18"	500	50°F	230°F	1	18,800	15,000	12,500	191,000	SEE SPECS BELOW	LOCATED SOUTH OF BLDG N234A 2

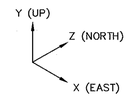

NOZZLE FORCE VECTOR AND MOMENT VECTOR ORIENTATION

NOZZLE LOAD SCHEDULE 4

	NOZZLE	SIZE	Fx (EAST) LBS	Fy (VERTICAL) LBS	Fz (NORTH) LBS	Mx (EAST) FT-LBS	My (VERTICAL) FT-LBS	Mz (NORTH) FT-LBS	REMARKS
SOFTENED COLD WATER MAKE-UP (SCW)	INLET	8"	±500	±700	±800	±800	±300	±400	
BOILER FEEDWATER (BFW)	OUTLET	10"	±6,100	±5,300	±6,500	±5,600	±16,700	±20,300	1
LOW PRESSURE STEAM (LPS)	INLET	18"	±13,800	±8,500	±21,100	±36,300	±4,700	±15,800	
FEEDWATER DRAIN (FWD)	OUTLET	8"	±2,800	±3,600	±3,800	±13,400	±8,200	±2,000	3
VENT CONDENSER (SCW)	INLET/ OUTLET	8"	±800	±1,200	±2,700	±2,000	±2,200	±1,800	

PUMP SCHEDULE (FOR DESIGN REFERENCE)

TAG	SERVICE	LOCATION	PUMP TYPE	FLOW GPM	FLOW PPH	WPR PSIG	TDH 'WG	EWT °F	FLUID SG	RATED TEMP	RATED PSIG	MAX NPSH REQ'D	INLETxOUTLET SIZE	STRAINER MESH	MOTOR DATA				OPERATING WEIGHT LBS	DETAIL	MFR AND MODEL NO.	REMARKS
															BHP	HP	VOLT/PHASE/HZ	RPM				
STFP	FEEDWATER	BOILER RM	200 PSIG STEAM TURBINE	430	–	550	–	230°	0.95	NA	NA	NA	5" x 4"	NA	NA	NA	NA	NA	NA	NA	TERRY TURBINE –	EXISTING (N.I.C.)
EFP	FEEDWATER	BOILER RM	HORIZ. MULTI-STAGE BASE MTD	480	–	650	1335'	230°	0.95	NA	NA	NA	5" x 4"	NA	NA	250	480 / 3ø / 60	3500	NA	NA	GOULD #3310 SIZE 3x4-8A	EXISTING (N.I.C.)
BFP-1	FEEDWATER	UNDER DAH FEEDWATER TANK	VERTICAL MULTI-STAGE BASE MTD	345	120K	650	1460'	230°	0.95	284°F	800	13.5'	4" x 2½"	NA	179	250	480 / 3ø / 60	3500	NA	NA	ITT GOULD MPN506C3AN1A	FUTURE (N.I.C.) 1 2
BFP-2	FEEDWATER	UNDER DAH FEEDWATER TANK	VERTICAL MULTI-STAGE BASE MTD	345	120K	650	1460'	230°	0.95	284°F	800	13.5'	4" x 2½"	NA	179	250	480 / 3ø / 60	3500	NA	NA	ITT GOULD MPN506C3AN1A	FUTURE (N.I.C.) 1 2
BFP-3	FEEDWATER	UNDER DAH FEEDWATER TANK	VERTICAL MULTI-STAGE BASE MTD	345	120K	650	1460'	230°	0.95	284°F	800	13.5'	4" x 2½"	NA	179	250	480 / 3ø / 60	3500	NA	NA	ITT GOULD MPN506C3AN1A	FUTURE (N.I.C.) 1 2
–	RO WATER	N271 YARD	HORIZ. END SUCTION BASE MTD	420	–	–	279'	–	1.00	500°F	NA	12.4'	2" x 3"	NA	45.8	50	480 / 3ø / 60	3500	NA	NA	DEAN PUMP PH261 2X3X10	EXISTING (N.I.C.) 5
–	RO WATER	N271 YARD	HORIZ. END SUCTION BASE MTD	420	–	–	279'	–	1.00	500°F	NA	12.4'	2" x 3"	NA	45.8	50	480 / 3ø / 60	3500	NA	NA	DEAN PUMP PH261 2X3X10	EXISTING (N.I.C.) 5

DEAERATING HEATER/FEEDWATER TANK PACKAGE SPECIFICATIONS

1. DESIGN, FABRICATE AND INSTALL NEW DEAERATING HEATER WITH FEEDWATER TANK PACKAGE SYSTEM (DESIGN-BUILD). PACKAGE SYSTEM SHALL BE DESIGNED AND STAMPED BY A REGISTERED PROFESSIONAL ENGINEER. ALL STRUCTURAL SUPPORTS SHALL BE DESIGNED AND STAMPED BY A STRUCTURAL ENGINEER REGISTERED IN THE STATE OF CALIFORNIA. SUBMIT STAMPED SHOP DRAWINGS AND STAMPED CALCULATIONS TO COTR AND PERMIT REVIEW BOARD FOR APPROVAL.
2. REFER TO SPECIFICATIONS AND DRAWINGS FOR ADDITIONAL REQUIREMENTS. REFER TO EQUIPMENT SCHEDULE FOR PERFORMANCE REQUIREMENTS.
3. DESIGN SYSTEM TO INTERFACE WITH ALL OPERATIONAL AND SAFETY SYSTEMS, AND PROCESSES OF THE EXISTING BOILER PLANT OPERATIONS.
4. SEISMIC DESIGN LOADS (DESIGN-BUILD PIPING AND VESSELS): DESIGN LOADS PER CBC 2007 AND ASCE7-05, CHAPTER 15. INCLUDE THE FOLLOWING REQUIREMENTS:
   A. RESPONSE MODIFICATION FACTOR (R) = 1.0
   B. OCCUPANCY IMPORTANCE FACTOR (I) = 1.5
   C. SUPPORT (GRAVITY AND LATERAL) LOADS: REFER TO SUPPORT LOAD SCHEDULE ON M4 SHEET 2 OF 2.
   D. NOZZLE LOADS: REFER TO NOZZLE LOAD SCHEDULE FOR LISTED NOZZLES.
5. SEISMIC DESIGN (SUPPORTING STRUCTURE AND PLATFORM): REFER TO DESIGN CRITERIA ON SHEET S1. INCLUDE SEISMIC LOADS FOR PIPING SUPPORTED BY STRUCTURE OR PLATFORM.
6. WIND DESIGN: DESIGN FOR WIND LOADS PER ASCE 7. SEE S1 FOR SEISMIC AND WIND DESIGN CRITERIA.
7. RELOCATABLE DESIGN: DESIGN DEAERATOR/FEEDWATER PACKAGE SYSTEM TANK AND SUPPORTING STRUCTURE TO FACILITATE RELOCATION AT A FUTURE DATE. SYSTEM MUST BE ABLE TO BE DISASSEMBLED, MOVED, AND REASSEMBLED IN NEW LOCATION AT NASA AMES. SUBMIT RELOCATION METHOD.
8. DEAERATOR: DIRECT CONTACT TRAY TYPE. DESIGN CAPACITY FOR 100% MAKE-UP WATER (NO CONDENSATE RETURN). DEAERATING ELEMENTS: STAINLESS STEEL. STEAM ATOMIZERS: EASILY REMOVABLE AND REPLACEABLE. PROVIDE SERVICE ACCESS MANWAY FOR INSPECTION AND REPAIR WITH MINIMUM 18"x24" CLEAR INSIDE DIMENSION.
9. FEEDWATER TANK: VORTEX BREAKER ON OUTLETS. PROVIDE SERVICE ACCESS MANWAY FOR INSPECTION AND REPAIR WITH MINIMUM 18"x24" CLEAR INSIDE DIMENSION. PROVIDE ADDITIONAL FEEDWATER NOZZLES FOR FUTURE PUMPS AS LISTED IN PUMP SCHEDULE.
10. PRESSURE VESSELS: DESIGN, FABRICATE AND STAMP VESSELS PER ASME CODE SECTION VIII, DIVISION 1. REGISTER VESSEL WITH NATIONAL BOARD OF BOILER PRESSURE VESSEL INSPECTORS. HYDROSTATICALLY TEST PER ASME. DESIGN VESSEL FOR SCHEDULED MAWP, PLUS MINIMUM 1/8" CORROSION ALLOWANCE. TANK WALL THICKNESS SHALL NOT BE LESS THAN 1/2". BACKING BANDS ARE PROHIBITED. REFER TO PIPING AND PRESSURE VESSEL GENERAL NOTES FOR ADDITIONAL REQUIREMENTS.
11. NOZZLES: DESIGN WITH ALLOWABLE LOADS TO MEET OR EXCEED THREE DIMENSIONAL FORCE AND MOMENT LOADS SCHEDULED ON SHEET M2 FOR BUILD-TO-PRINT PIPING. DESIGN OF NOZZLES FOR DESIGN-BUILD PIPING SHALL INCLUDE AN IMPOSED 1.25" HORIZONTAL AND 0.5" VERTICAL DISPLACEMENT OF TANK NOZZLES AND TANK FRAMING IN SEISMIC PIPING ANALYSIS.
12. CONTROLS: DESIGN AND PROVIDE CONTROLS AS REQUIRED BY SEQUENCE OF OPERATION, AND SPECIFICATIONS ON SHEET M8.
13. PIPE SUPPORTS (DESIGN-BUILD PIPING): REFER TO CONTRACT DOCUMENTS FOR PIPING REQUIREMENTS. DESIGN TO MEET SEISMIC DESIGN LOADS SPECIFIED.
14. PIPE SUPPORTS (BUILD-TO-PRINT PIPING): SUPPORTS ATTACHED TO PACKAGE STRUCTURE MUST RESIST LOADS LISTED IN PIPE SUPPORT SCHEDULE ON SHEET M4 (2 OF 2).
15. PLATFORMS, CATWALKS AND STAIRWAYS: CONFORM TO OSHA STANDARDS. PROVIDE CHECKER PLATE TO ALL PLATFORMS AND CATWALKS. PROVIDE STORAGE TANK LEVEL ACCESS COMPLETELY AROUND TANK WITH 3'-0" MINIMUM ACCESS WIDTH FROM OUTSIDE DIAMETER OF TANK INSULATION. PROVIDE ACCESS TO ALL MANWAYS AND PRESSURE RELIEF VALVES. DECKING: CHECKER PLATE STYLE. PROVIDE FALL PROTECTION ATTACHMENT POINTS FOR ACCESS TO REMAINDER OF SYSTEM PER OSHA REQUIREMENT. PROVIDE 3'-0" MINIMUM CLEARANCE FROM OUTER EDGE OF PLATFORM AND HANDRAIL TO EXISTING MUFFLER.
16. JIB CRANE: AT SOUTH SIDE OF TANK, PROVIDE JIB CRANE WITH MOTORIZED TROLLEY MOUNT, SINGLE PHASE, LIFTING MOTOR = 0.6 HP, TROLLEY MOTOR = 0.54 HP (RATED FOR 1.0 TON). JIB CRANE MUST BE ABLE TO LIFT ITEMS TO HIGHEST CATWALK. JIB CRANE MINIMUM REACH: 36" BEYOND EDGE OF PLATFORM RAILING.
17. TESTING & COMMISSIONING: PROVIDE FUNCTIONAL TEST OF ALL NEW EQUIPMENT AND CONTROLS PRIOR TO CONNECTION WITH EXISTING PLANT. PROVIDE SUPERVISED STARTUP OF DEAERATOR BY FACTORY REPRESENTATIVE. SCHEDULE STARTUP AND ACCEPTANCE TEST WITH BOILER PLANT PERSONNEL.
18. SUBMIT COMPLETE O&M DOCUMENTATION.
19. SAFETY RELIEF VALVE: ASME UV STAMPED WITH 15 PSIG SET POINT FOR DISCHARGE TO ATMOSPHERE. SELECT VALVE BASED ON CALCULATED STEAM AND MAKE-UP WATER RELIEVING CAPACITY REQUIRED PER ASME B&PVC SECTION VIII, DIVISION 1. SUBMIT PRODUCT DATA FOR VALVE, AND REQUIRED FLOW CALCULATIONS FOR APPROVAL. PROVIDE FLOW BALANCING TEE ON DISCHARGE PIPE TO MINIMIZE REACTION FORCE. PROVIDE DRAIN PIPING FROM VALVE SEAT AND VALVE DISCHARGE PIPE TO FWD.
20. STEAM REGULATING VALVE: REPLACE EXISTING 2" STEAM PRESSURE CONTROL VALVE AND ASSOCIATED CONTROLS. SIZE AND SELECT VALVE FOR SERVICE WITH NEW DEAERATOR. VALVE SHALL BE ASME B16.34. SUBMIT PRODUCT DATA OF VALVE FOR APPROVAL, INCLUDING WEIGHT, CODE SPECIFICATIONS, MANUFACTURER SPECIFICATIONS, AND FLOW COEFFICIENT (Cv VALUE). MODIFY (E) PIPING AS NEEDED TO FIT NEW VALVE.
21. SUBMIT INTEGRATED SYSTEM TEST PLAN TO COTR FOR APPROVAL TWO WEEKS PRIOR TO COMMISSIONING.
22. VENT CONDENSER: DESIGN CONDENSER AS PRESSURE VESSEL FOR DUTY LISTED IN EQUIPMENT SCHEDULE. CONDENSER MAY BE EXTERNAL OR INTERNAL. ASME RATED SHELL AND TUBE HEAT EXCHANGER RATED FOR 15 PSIG MINIMUM.
23. ACCEPTABLE MANUFACTURERS: CRANE ENVIRONMENTAL, ENTECH ENVIRONMENTAL AND INDUSTRIAL EQUIPMENT, INDUSTRIAL STEAM, JOHNSTON BOILER, KANSAS CITY DEAERATOR, MOSS ENERGY, NEBRASKA, SIEMENS WATER TECHNOLOGIES, OR APPROVED EQUAL. NEBRASKA DEAERATOR WAS USED AS BASIS OF DESIGN ONLY, AND IS NOT INTENDED TO EXCLUDE OTHER EQUIVALENT PRODUCTS. OTHER MANUFACTURERS ARE ALLOWED TO SUBMIT. ALL MANUFACTURERS MUST SUBMIT PRODUCT DATA FOR APPROVAL DEMONSTRATING COMPLIANCE WITH THE PERFORMANCE AND OTHER REQUIREMENTS SPECIFIED FOR THE PACKAGE.

SHEET NOTES

1. FOR MECHANICAL SYMBOLS, ABBREVIATIONS AND GENERAL NOTES, SEE SHEET M1.

KEY NOTES

1. DESIGN FEEDWATER TANK WITH NOZZLES FOR FUTURE CONNECTION TO BOILER FEEDWATER PUMPS. REFER TO PIPING DIAGRAM ON SHEET M7 FOR NUMBER AND SIZE OF FEEDWATER NOZZLES. INSTALL BLIND FLANGES ON NOZZLES FOR FUTURE CONNECTION. PROVIDE 16" DIAMETER REINFORCING PAD ⅜" THICK ON 10" FEEDWATER OUTLET NOZZLE. PROVIDE 12" DIAMETER REINFORCING PAD ⅜" THICK ON 6" FEEDWATER OUTLET NOZZLES.
2. DESIGN FOOTPRINT OF DAH-1 SUPPORT FRAME TO ALLOW SPACE FOR THREE (3) FUTURE BOILER FEED PUMPS. SEE PUMP SCHEDULE. EACH PUMP IS SIZED FOR 50% OF TOTAL FUTURE BOILER PLANT CAPACITY (250,000 PPH).
3. PROVIDE 15" DIAMETER REINFORCING PAD ⅜" THICK ON 8" FEEDWATER DRAIN NOZZLE.
4. DEVIATIONS IN PIPE SUPPORT LOCATION OR PIPE ROUTING TO NOZZLES CONNECTED TO BUILD-TO-PRINT PIPING MAY REQUIRE PIPING DESIGN TO BE REVISED BY GOVERNMENT. IN SUCH AN EVENT, CONTRACTOR SHALL REDESIGN NOZZLES SO THAT ALLOWABLE NOZZLE LOADS ARE EQUAL TO OR GREATER THAN REVISED NOZZLE LOADS FROM GOVERNMENT PIPING REDESIGN. SUBMIT NOZZLE REDESIGN FOR APPROVAL.
5. PUMP DATA FOR SIZING SAFETY AND PRESSURE RELIEF DEVICES. PUMP SHUTOFF HEAD IS 153 PSIG.

Approved for Construction
Moffett Field Permit Board
Chief Building Official
Permit No. 10P003

REGISTERED PROFESSIONAL ENGINEER MICHAEL S. CALLAHAN M 21 88 2 MECHANICAL STATE OF CALIFORNIA
Exp. 6/30/11

ZONE	LETTER	DESCRIPTION	DRAWN	DATE	APPRVD
		REVISIONS			

		DATE
DRAWN	J.HO	4/21/2010
DESIGNED	M.CALLAHAN	4/22/10
CHECKED	P.WAN	4/22/10
PROJMGR	M.CALLAHAN	4/22/10
REQUESTER	J.B.ALDOVA	4/26/2010
USER	J.B.ALBONI	4/26/10
SAFETY	D.FRASER	4/22/10
SUPERVISOR	S.FRANKEL	4/22/10

Ames Research Center
Moffett Field, California

N234A SVS DEAERATOR/FEEDWATER TANK REPLACEMENT

MECHANICAL

SCHEDULES & SPECIFICATIONS

SIZE	CAGE CODE		REV
D	25307	A 234A-1000-M2	
SCALE		INDEX	SHEET OF

FILE NAME: 234A-M02 04-22-2010

DWG: R:\234A\60046725.0001 (X80036) Feed Water Deaerator\500_CAD\FEEDWATER\M\Sheet\234A-M02_SPECS & SCHEDULES.dwg Version: 17.1s (LMS Tech) User: jlho
DATE: Apr 22, 2010 - 8:24:22 am

DWG NO.	SH.	REV
A234A-1000-M3		

SHEET NOTES

1. SEE SHEET M1 FOR SYMBOLS, ABBREVIATIONS, MECHANICAL NOTES AND EARTHWORK NOTES.
2. ALL DIMENSIONS SHOWN ARE FOR REFERENCE ONLY. VERIFY WIDTH AND DEPTH OF EXISTING PIPING AND EXISTING EARTHWORK BEFORE CONSTRUCTION.
3. LOCATE ALL UNDERGROUND PIPES TO BE CONNECTED, AND PIPES WITHIN THE AREA OF CONSTRUCTION PRIOR TO COMMENCEMENT OF ANY WORK. ADJUST LAYOUT DESIGN OF PIPES AND EQUIPMENT FOR ACTUAL FIELD CONDITIONS, AND SUBMIT REVISIONS FOR APPROVAL.

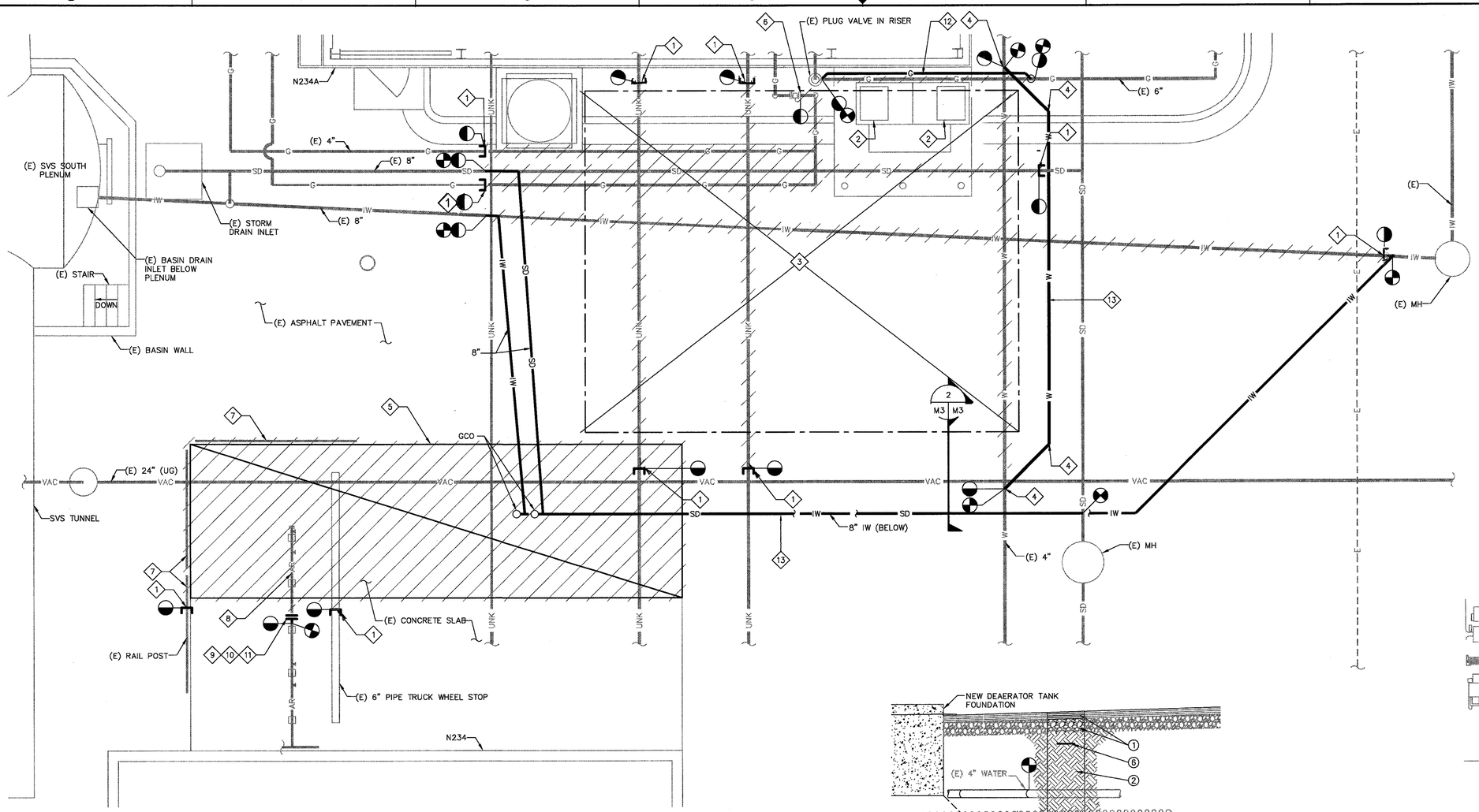

1 – M3 UTILITIES PLAN
SCALE: 1/4" = 1'-0"

1/4"=1' 0 2 4 8 12

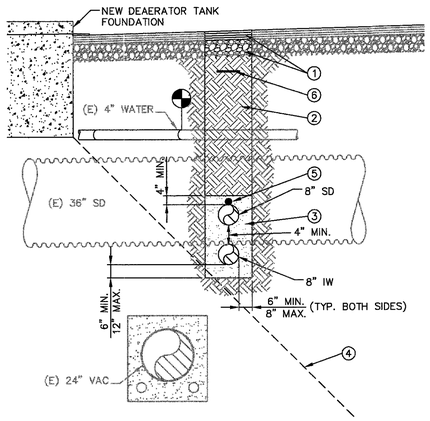

DETAIL NOTES:
1. SEE STRUCTURAL DWGS. FOR PAVEMENT REPLACEMENT AND AGGREGATE BASE INSTALLATION.
2. APPROVED BACKFILL: COMPACT MECHANICALLY TO 95% RELATIVE DENSITY MINIMUM. SEE STRUCTURAL DWGS. FOR TRENCH BACKFILL IN PAVED AREAS AND ROADWAYS.
3. SAND BEDDING MATERIAL: COMPACT TO 95% RELATIVE DENSITY.
4. FOUNDATION INFLUENCE LINE: DO NOT INSTALL NEW PIPING BELOW THIS LINE.
5. TRACER WIRE: 14 AWG AT 4" ABOVE TOP OF PIPE, FOR NON-METALLIC PIPE.
6. TRACER WARNING TAPE: 18" BELOW GRADE

2 M3 | M3 SECTION – TRENCH DETAIL
SCALE: 3/8" = 1'-0"

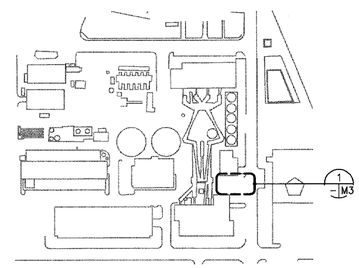

KEY PLAN

KEY NOTES

1. CAP EXISTING PIPE.
2. CHEMICAL TREATMENT SYSTEM TO BE RELOCATED BY GOVERNMENT.
3. DEMOLISH (E) CURBS, BOLLARDS, AND EQUIPMENT PADS WITHIN EXCAVATION AREA FOR DEAERATOR TANK FOUNDATION. SEE STRUCTURAL DRAWINGS FOR SIZE AND LOCATION OF NEW CONCRETE FOUNDATION.
4. REMOVE AND RELOCATE EXISTING WATER LINE WHERE REQUIRED TO AVOID CONFLICT WITH DEAERATOR TANK FOUNDATION. INSTALL WITH THRUST BLOCKS AT CHANGES OF DIRECTION PER CPC INSTALLATION STANDARDS.
5. REMOVE (E) CONCRETE SLAB. SEE STRUCTURAL DWGS FOR PAVEMENT REPLACEMENT. REGRADE NEW PAVEMENT FOR DRAINAGE TO (E) STORM DRAIN.
6. DISCONNECT (E) PIPING WITH FLANGE AT (E) PLUG VALVE. INSTALL BLIND FLANGE ON (E) GAS VALVE.
7. REMOVE (E) GUARD RAILS.
8. REMOVE AND SALVAGE (E) KELLUM GRIP (RESTRAINT) ON NOZZLE TO BE DEMOLISHED, AND DELIVER TO NASA. CUT AND REMOVE (E) 1" STAINLESS STEEL ARGON PIPING AND PIPE SUPPORTS TO POINT OF DISCONNECTION. CUT PIPE 3" FROM LAST (E) PIPE SUPPORT TO REMAIN. CLEAN ALL DEBRIS AND PREPARE PIPE END FOR WELDING.
9. TERMINATE (E) 16.7 MPa ARGON PIPE WITH WELDING NECK FLANGE AND MATING BLIND FLANGE PER ASME B31.3. FIELD WELDED FLANGE: ASME B16.5, CLASS 1500, SIZE 1", ASTM A182 GRADE F316. BOLTS: ASTM A193 GRADE B7. NUTS: HEAVY HEX, ASTM A194 GRADE 2H. WELDING, NDE AND TESTING SHALL COMPLY WITH PIPING AND PRESSURE VESSEL GENERAL NOTES, UNLESS OTHERWISE NOTED.
10. ARGON PIPE WELDING NDE REQUIREMENTS: 100% PT ON ROOT PASS, 100% RT ON COMPLETED WELD, ACCEPTANCE CRITERION PER ASME B31.3.
11. PERFORM HYDROSTATIC PRESSURE TEST OF FLANGE WELD AT 4500 PSIG TEST PRESSURE, AND AMBIENT TEMPERATURE. UTILIZE A FLANGE WELD TEST PLUG TO ISOLATE (E) PIPING.
12. CUT (E) UG 6" GAS PIPE (21 PSIG) BELOW (E) PLUG VALVE AT SIDE OF BLDG. REPLACE WITH NEW 6" GAS PIPE ABOVE GROUND. RECONNECT TO (E) PLUG VALVE AND TO (E) UG PIPE.
13. REROUTE (E) PIPE AROUND DEAERATOR TANK FOUNDATION, AS SHOWN IN SECTION. INSTALL REPLACEMENT PIPING WITH UNIFORM GRADE BETWEEN POINTS OF CONNECTION. MATCH EXISTING PIPE MATERIAL, UNLESS DIRECTED OTHERWISE BY COTR.

Approved for Construction
Moffett Field Permit Board
Chief Building Official
Permit No. 10P003

REGISTERED PROFESSIONAL ENGINEER MICHAEL S. CALLAHAN M-12488 MECHANICAL STATE OF CALIFORNIA
Exp. 6/30/11

ZONE	LETTER	DESCRIPTION	DRAWN	DATE	APPRVD
		REVISIONS			

		DATE
DRAWN	J.HO	4/12/2010
DESIGNED	M.CALLAHAN	4/12/10
CHECKED	P.WAN	4/12/10
PROJMGR	M.CALLAHAN	4/12/10
REQUESTER	J.BALDOVINO	04/14/2010
USER	J.BALDONI	4/12/10
SAFETY	D.FRASER	4/19/10
SUPERVISOR	S.FRANKEL	4.14.10
REVIEWER	M.LEE	4/14/10

Ames Research Center
Moffett Field, California

N234A SVS DEAERATOR/FEEDWATER TANK REPLACEMENT
MECHANICAL

SITE UTILITIES PLAN

SIZE	CAGE CODE	REV
D	25307	A
SCALE: AS NOTED	INDEX	SHEET OF

234A-1000-M3

FILE NAME: 234A-M03 04-12-2010

DWG: R:\234A\60046725.0001 (K8005G) Feed Water Deaerator\500_CAD\FEEDWATER\M\Sheet\234A-M03_DEMOLITION PLAN.dwg Version: 17.1s (LMS Tech) User: jjho
DATE: Apr 12, 2010 - 9:00:19 am

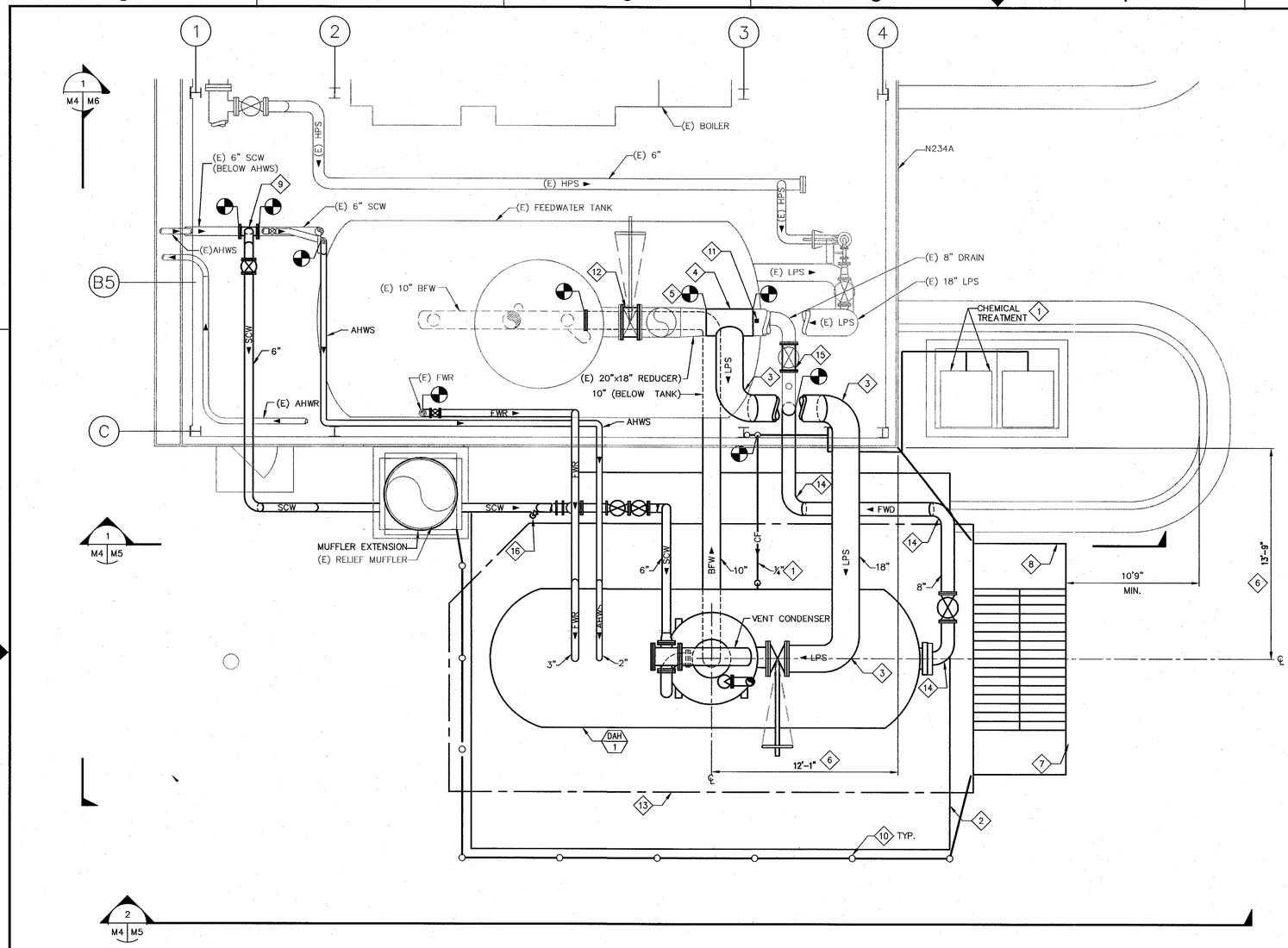

1 SITE PLAN
G1 M4 SCALE: 1/4" = 1'-0"

1/4"=1' 0 2 4 8 12

SHEET NOTES

1. SEE SHEET M1 FOR SYMBOLS, ABBREVIATIONS AND MECHANICAL NOTES.
2. SEE SHEET M2 FOR EQUIPMENT SCHEDULES.
3. SEE SHEET M7 AND M8 FOR PIPING DIAGRAMS.

KEY NOTES

1. CHEMICAL TREATMENT SYSTEM TO BE RELOCATED BY GOVERNMENT. CHEMICAL FEED PIPING TO BE RECONNECTED TO STEAM SYSTEM BY GOVERNMENT. SEE SHEET S4 FOR FOUNDATION PAD.
2. DEAERATOR FOUNDATION. SEE STRUCTURAL DRAWINGS.
3. 18 INCH SHORT RADIUS ELBOW, SCHEDULE 80.
4. 18"x18"x18" TEE FITTING, EXTRA STRONG. PROVIDE 100% RT ON WELDS.
5. POINT OF CONNECTION FOR 18" AT EXISTING 20"x18"" REDUCER.
6. DIMENSION CENTERLINE OF NEW DEAERATOR TANK AND CORNER OF EXISTING BUILDING N234A.
7. REFER TO SHEET S2 FOR CHAIN LINK FENCE. PROVIDE GATE AND PADLOCK TO MEET FACILITY MAINTENANCE REQUIREMENTS.
8. INSTALL FIBERGLASS STAIRWAY FOR DEAERATOR/FEEDWATER PLATFORM ACCESS PER NOTE 15 FOR THE DEAERATOR PACKAE SPECIFICATIONS ON SHEET M2. MINIMUM SETBACK FROM STREET SHALL EQUAL OR EXCEED SETBACK OF EXISTING STAIRWAYS FOR SVS COOLING TOWERS.
9. 6"x6"x6" TEE FITTING.
10. REMOVABLE BOLLARDS WITH PLASTIC CHAIN, AND WARNING SIGNS. SEE DETAIL 2 ON SHEET S4.
11. RE-POSITION EXISTING PIPE HANGER CLAMP TO AVOID NEW 18" TEE.
12. REFER TO KN#2 ON SHEET M8 FOR MODIFICATION OF CONNECTION TO (E) DEAERATOR.
13. DEAERATOR PLATFORM OUTLINE.
14. 8" INCH LONG RADIUS ELBOW, SCHEDULE 80.
15. REFER TO KN#8 ON SHEET M7 FOR MODIFICATION OF CONNECTION TO (E) DEAERATOR.
16. 3/4" PRESSURE RELIEF VALVE. SEE SHEET M7 FOR DETAIL.

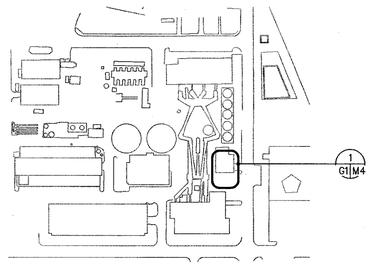

KEY PLAN

Approved for Construction
Moffett Field Permit Board

Chief Building Official
Permit No. 10P003

ZONE	LETTER	DESCRIPTION	DRAWN	DATE	APPRVD

REVISIONS

DRAWN J.HO	DATE 5/20/2010	
DESIGNED M.CALLAHAN	DATE 5/20/10	
CHECKED P.WAN	DATE 5/20/10	
PROJMGR M.CALLAHAN	DATE 5/20/10	
REQUESTER J.BALDOVINO	DATE 05/24/2010	
USER J.BALBOVINO	DATE 6/07/2010	
SAFETY D.FRASER	DATE 5/21/10	
SUPERVISOR S.FRANKEL	DATE 5/21/10	

REGISTERED PROFESSIONAL ENGINEER MICHAEL S. CALLAHAN M 21788 MECHANICAL STATE OF CALIFORNIA Exp. 6/30/11

Ames Research Center
Moffett Field, California

N234A SVS DEAERATOR/FEEDWATER TANK REPLACEMENT
MECHANICAL

SITE PLAN

SIZE	CAGE CODE		REV
D	25307	234A-1000-M4	A
SCALE AS NOTED		INDEX	SHEET 1 OF 2

FILE NAME: 234A-M04 04-22-2010

DWG NO. A234A-1000-M4 SH. 1 REV

DWG: R:\234A\60046725.0001 (K80656) Feed Water Deaerator\500_CAD\FEEDWATER\M\Sheet\234A-M04-1_SITE PLAN.dwg Version: 17.1s (LMS Tech) User: jjho
DATE: May 20, 2010 - 10:00:41 am

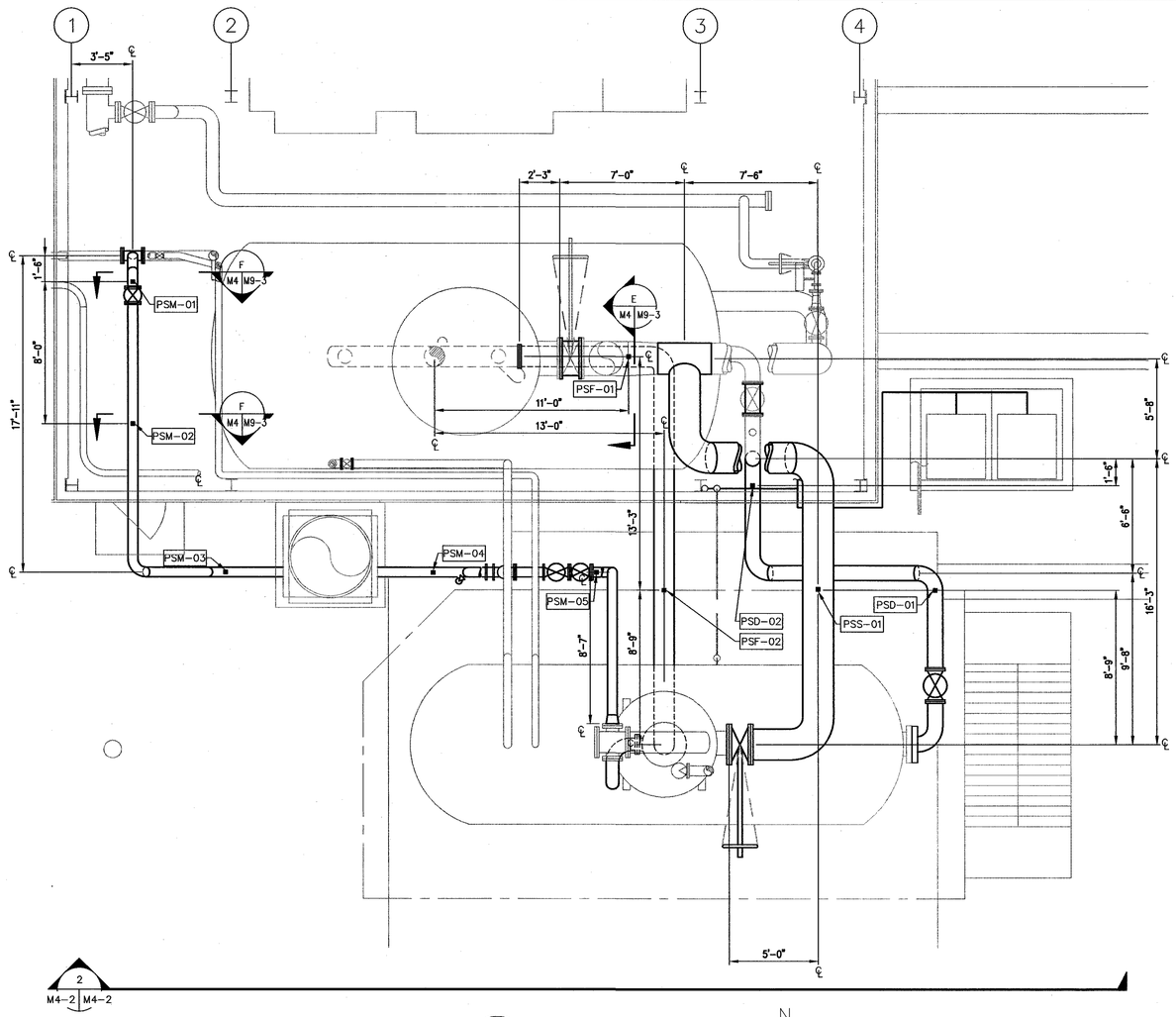

1 PIPE SUPPORTS PLAN
M4-2 SCALE: 1/4" = 1'-0"

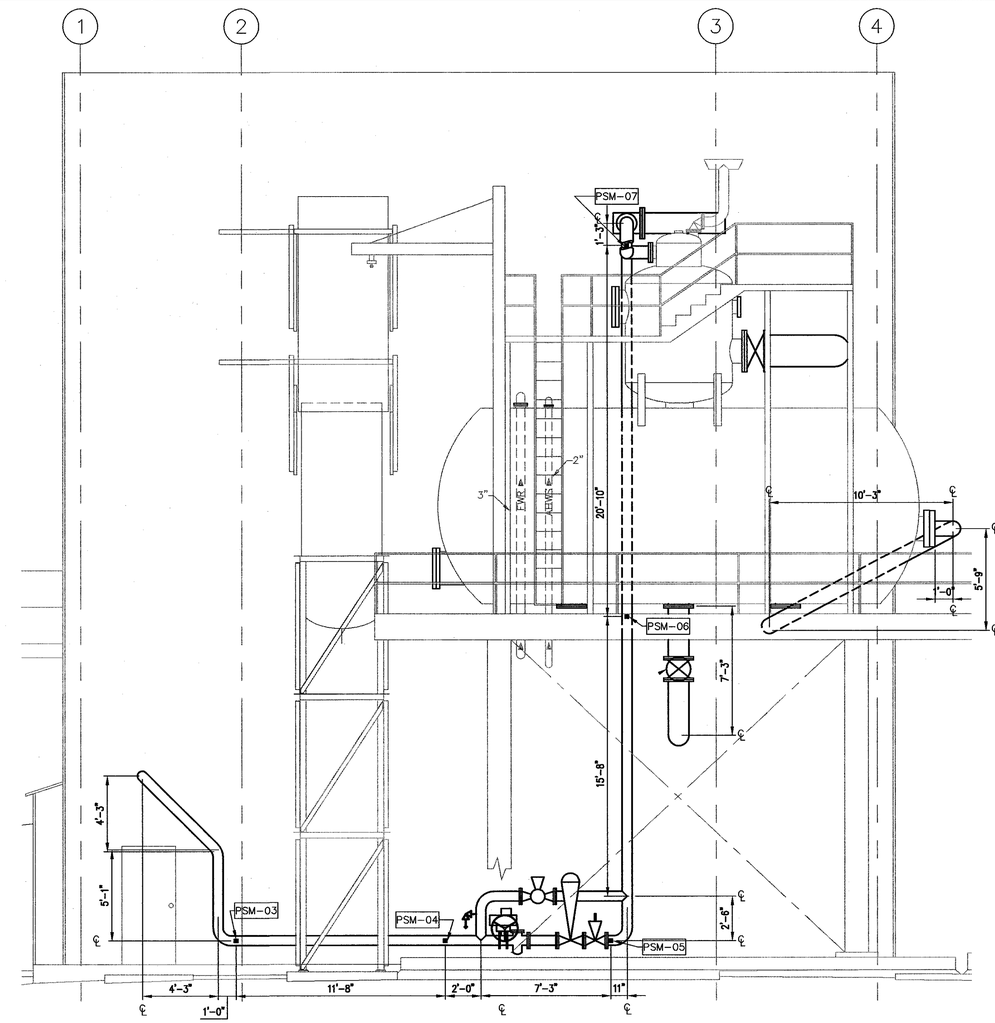

2 SECTION (LOOKING NORTH)
M4-2 SCALE: 1/4" = 1'-0"

SHEET NOTES

1. SEE SHEET M1 FOR SYMBOLS, ABBREVIATIONS AND MECHANICAL NOTES.
2. SEE SHEET M2 FOR EQUIPMENT SCHEDULES.
3. SEE SHEET M7 AND M8 FOR PIPING DIAGRAMS.

KEY NOTES

1. DEVIATIONS IN PIPE ROUTING OR PIPE SUPPORT LOCATIONS FOR BUILD-TO-PRINT PIPING MAY REQUIRE PIPING REDESIGN BY THE GOVERNMENT. IN SUCH AN EVENT, CONTRACTOR SHALL REVISE DESIGN-BUILD SUPPORTS TO RESIST SUPPORT REACTION LOADS FROM GOVERNMENT PIPING REDESIGN. SUBMIT SUPPORT REDESIGN FOR APPROVAL.

Y (UP)
Z (NORTH)
X (EAST)

PIPE FORCE VECTOR AND MOMENT VECTOR ORIENTATION

PIPE SUPPORT LOAD SCHEDULE (1)

SERVICE	SHEET ZONE	TAG	Fx (EAST) LBS	Fy (VERTICAL) LBS	Fz (NORTH) LBS	STIFFNESS LBS/IN	DESCRIPTION OF PIPE SUPPORT
SCW	D8	PSM-01	–	–	–	–	SCW PIPING SUPPORT. SEE DETAIL F ON M9 (SHEET 3 OF 3).
SCW	C8	PSM-02	–	–	–	–	SCW PIPING SUPPORT. SEE DETAIL F ON M9 (SHEET 3 OF 3).
SCW	C7	PSM-03	–	–	–	–	SCW PIPING SUPPORT. SEE DETAIL A ON M9 (SHEET 2 OF 3).
SCW	C7	PSM-04	–	–	–	–	SCW PIPING SUPPORT. SEE DETAIL C ON M9 (SHEET 2 OF 3).
SCW	C6	PSM-05	–	–	–	–	SCW PIPING SUPPORT. SEE DETAIL C ON M9 (SHEET 2 OF 3).
SCW	C2	PSM-06	±1,800	–	±1,900	Kx=50,000 Kz=50,000	DESIGN-BUILD SUPPORT FROM DEAERATOR STRUCTURAL FRAMING
SCW	D2	PSM-07	±1,800	–	±4,300	Kx=50,000 Kz=50,000	DESIGN-BUILD SUPPORT FROM DEAERATOR STRUCTURAL FRAMING
BFW	C6	PSF-01	–	–	–	–	BFW PIPING SUPPORT. SEE DETAIL E ON M9 (SHEET 3 OF 3).
BFW	C6	PSF-02	±5,600	–	–	Kx=5,000	DESIGN-BUILD SUPPORT FROM DEAERATOR STRUCTURAL FRAMING
LPS	C5	PSS-01	±16,300	±9,000	–	Kx=50,000 Ky=100,000	DESIGN-BUILD SUPPORT FROM DEAERATOR STRUCTURAL FRAMING
FWD	C5	PSD-01	±5,400	±3,700	–	Kx=50,000 Ky=1,000,000	DESIGN-BUILD SUPPORT FROM DEAERATOR STRUCTURAL FRAMING
FWD	C6	PSD-02	–	–	–	–	FWD PIPING SUPPORT. SEE DETAIL G ON M9 (SHEET 3 OF 3).

REGISTERED PROFESSIONAL ENGINEER MICHAEL S. CALLAHAN M 27198 MECHANICAL STATE OF CALIFORNIA
Exp. 6/30/11

1/4"=1' 0 2 4 8 12

Approved for Construction
Moffett Field Permit Board
Chief Building Official
Permit No. 10P003

ZONE	LETTER	DESCRIPTION	DRAWN	DATE	APPRVD
		REVISIONS			

DRAWN J.HO	DATE 4/22/2010	
DESIGNED M.CALLAHAN	DATE 4/22/10	
CHECKED P.WAN	DATE 4/22/10	
PROJMGR M.CALLAHAN	DATE 4/22/10	
REQUESTER J.BALDOVINO	DATE 04/08/2010	
USER J.BALBONI	DATE 4/26/10	
SAFETY D.FRASER	DATE 4/22/10	
SUPERVISOR S.FRANKEL	DATE 4-27-10	

Ames Research Center
Moffett Field, California

N234A SVS DEAERATOR/FEEDWATER TANK REPLACEMENT
MECHANICAL

PIPE SUPPORTS PLAN

SIZE	CAGE CODE		REV
D	25307	234A-1000-M4	
SCALE AS NOTED		INDEX	SHEET OF

FILE NAME: 234A-M04 04-22-2010

DWG: R:\234A\60046725.0001 (K80056) Feed Water Deaerator\500_CAD\FEEDWATER\M\Sheet\234A-M04-2_SITE PLAN_DIMENSION.dwg Version: 17.1s (LMS Tech) User: jlho
DATE: Apr 22, 2010 - 8:25:21 am

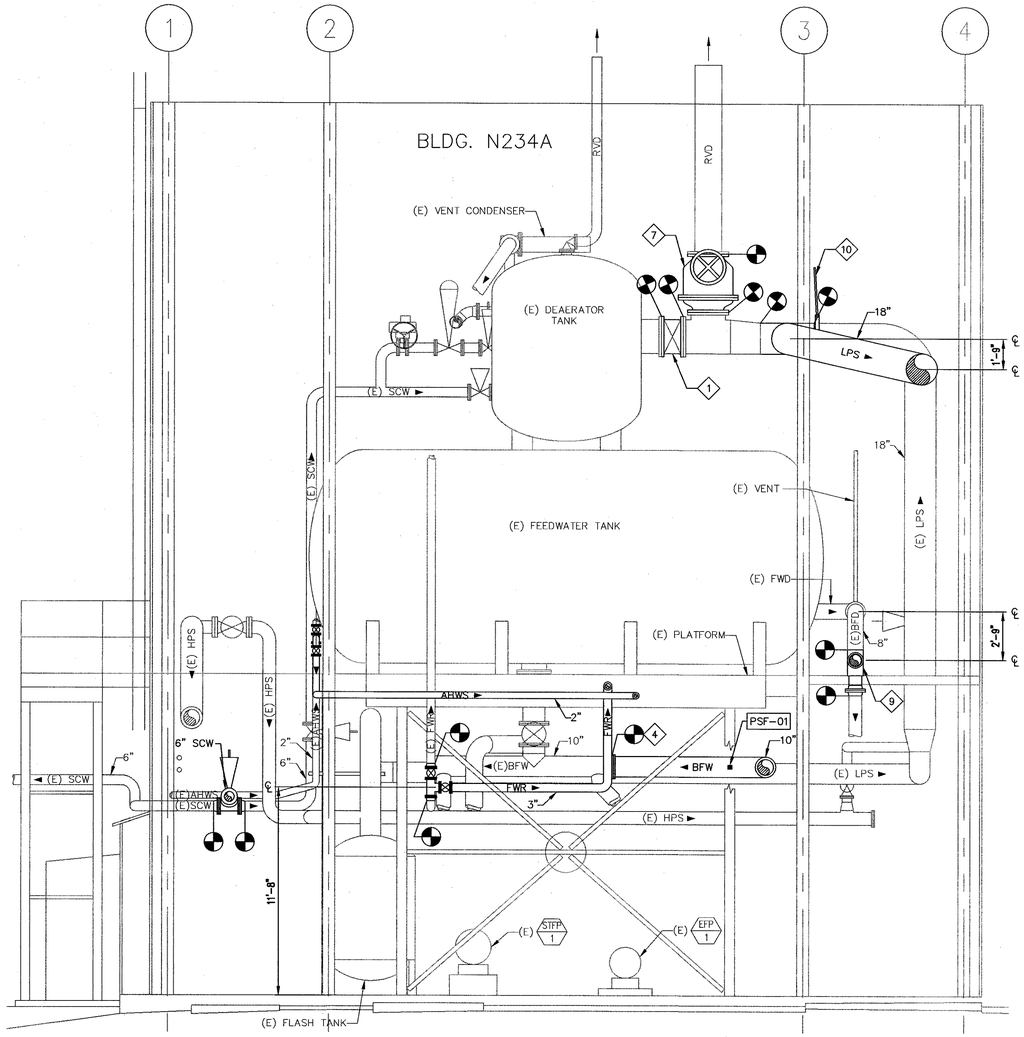

1 M4 M5 SECTION – (E) DEAERATOR (LOOKING NORTH)
SCALE: 1/4" = 1'-0"

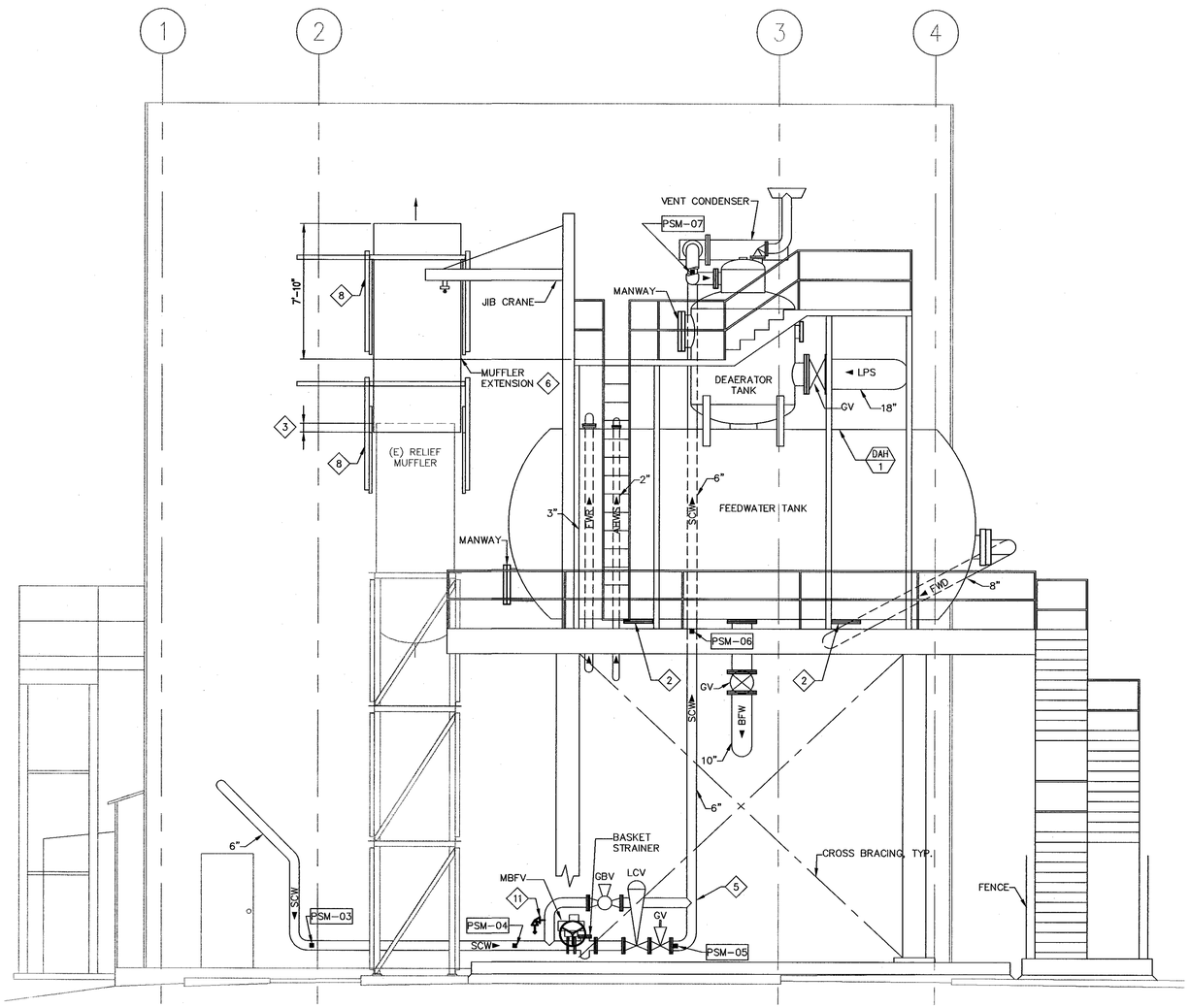

2 M4 M5 SECTION – NEW DEAERATOR (LOOKING NORTH)
SCALE: 1/4" = 1'-0"

1/4"=1' 0 2 4 8 12

SHEET NOTES

1. SEE SHEET M1 FOR MECHANICAL ABBREVIATIONS AND GENERAL NOTES.
2. SEE SHEET M7 AND M8 FOR PIPING DIAGRAMS.
3. SEE PIPING SUPPORT TABLE ON SHEET M4 (2 OF 2)

KEY NOTES

1. REFER TO SHEET M8 FOR MODIFICATION TO EXISTING DEAERATOR CONNECTION.
2. BLIND FLANGE FOR FUTURE CONNECTION.
3. MUFFLER EXTENSION SHALL OVERLAP (E) MUFFLER 6" MINIMUM.

KEY NOTES

4. REMOVE EXISTING 10" PIPE CAP. INSTALL 10" FLANGES AT POINT OF CONNECTION TO (E) 10" BFW PIPING.
5. 6" SCHEDULE 80 BUTT WELD TEE.
6. MUFFLER EXTENSION. SEE DETAIL 3 ON M9 SHEET 1 FOR DETAIL.
7. SEE SHEET M8 STEAM PIPING SCHEMATIC FOR 18" MULTI-PORT VALVE.
8. MUFFLER EXTENSION SUPPORT. SEE DETAILS ON SHEET S5.
9. 8" SCHEDULE 80 BUTT WELD TEE.
10. RE-POSITION EXISTING PIPE HANGER CLAMP TO AVOID NEW 18" TEE.
11. 3/4" PRESSURE RELIEF VALVE. SEE SHEET M7 FOR DETAIL.

REGISTERED PROFESSIONAL ENGINEER MICHAEL S. COLLAZO No. M 28888 MECHANICAL STATE OF CALIFORNIA
Exp. 6/30/11

Approved for Construction
Moffett Field Permit Board
Chief Building Official
Permit No. 10P003

ZONE	LETTER	DESCRIPTION	DRAWN	DATE	APPRVD

REVISIONS

		DATE
DRAWN J.HO		4/22/2010
DESIGNED M.CALLAZO		4/22/10
CHECKED P.WAN		4/22/10
PROJMGR M.CALLAZO		4/22/10
REQUESTED J.BACDOYAG		04/22/2010
USER J.BALBONI		4/22/10
SAFETY D.FRASER		4/22/10
SUPERVISOR S.FRANKEL		4/22/10

Ames Research Center
Moffett Field, California

N234A SVS DEAERATOR/FEEDWATER TANK REPLACEMENT

MECHANICAL
SOUTH ELEVATIONS

SIZE	CAGE CODE	REV
D	25307	A 234A-1000-M5

SCALE | INDEX | SHEET OF

FILE NAME: 234A-M05 04-22-2010

DWG: R:\234A\60046725.0001 (K60056) Feed Water Deaerator\500_CAD\FEEDWATER\M\Sheet\234A-M05_South Elevation.dwg Version: 17.1s (LMS Tech) User: jjho
DATE: Apr 22, 2010 - 8:25:31 am

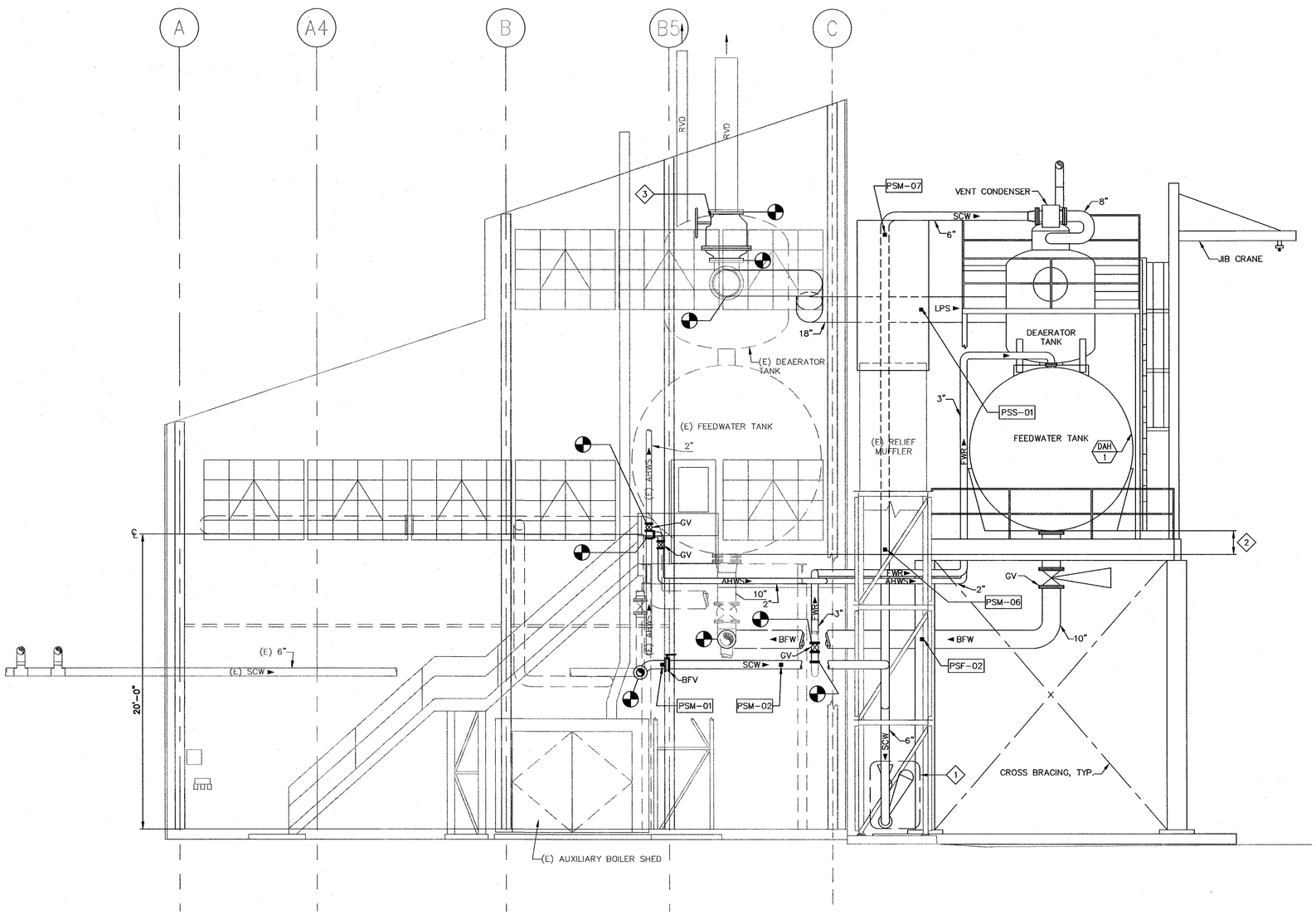

1 M4 M6 ELEVATION/SECTION – BOILER HOUSE (LOOKING EAST)
SCALE: 1/4" = 1'-0"

SHEET NOTES

1. FOR MECHANICAL ABBREVIATIONS AND GENERAL NOTES SEE SHEET M1.
2. SEE DWG M7 AND M8 FOR PIPING DIAGRAMS.
3. SEE PIPE SUPPORT LOAD SCHEDULE ON SHEET M4 (2 OF 2) FOR SUPPORT DATA.

KEY NOTES

1. SCW FEEDWATER MAKE-UP LEVEL CONTROL ASSEMBLY.
2. INSTALL BOTTOM OF NEW DEAERATOR TANK AT 2'-0" MINIMUM ABOVE BOTTOM OF EXISTING DEAERATOR TANK.
3. REFER TO SHEET M8 STEAM PIPING SCHEMATIC FOR 18" MULTI-PORT VALVE.

Approved for Construction
Moffett Field Permit Board
Chief Building Official
Permit No. 10P003

ZONE	LETTER	DESCRIPTION	DRAWN	DATE	APPRVD

REVISIONS

REGISTERED PROFESSIONAL ENGINEER MICHAEL S. CALLAHAN M-21188 MECHANICAL STATE OF CALIFORNIA Exp. 6/30/11

1/4"=1' 0 2 4 8 12

		DATE
DRAWN J.HO		4/22/2010
DESIGNED M.CALLAHAN		4/22/10
CHECKED P.WAN		4/22/10
PROJMGR M.CALLAHAN		4/22/10
REQUESTER J.BALDOVINO		04/26/2010
USER J.BALBONI		4/26/10
SAFETY D.FRASER		4/22/10
SUPERVISOR S.FRANKEL		5-3-10

Ames Research Center
Moffett Field, California

N234A SVS DEAERATOR/FEEDWATER TANK REPLACEMENT

MECHANICAL

WEST ELEVATION

SIZE	CAGE CODE	
D	25307	234A-1000-M6 REV
SCALE		INDEX SHEET OF

FILE NAME: 234A-M06 04-22-2010

DWG: R:\234A\60046725.0001 (K80056) Feed Water Deaerator\500_CAD\FEEDWATER\M\Sheet\234A-M06_West Elevation.dwg Version: 17.1s (LMS Tech) User: jjho
DATE: Apr 22, 2010 - 8:25:41 am

DWG NO.	SH.	REV
A234A-1000-M7		

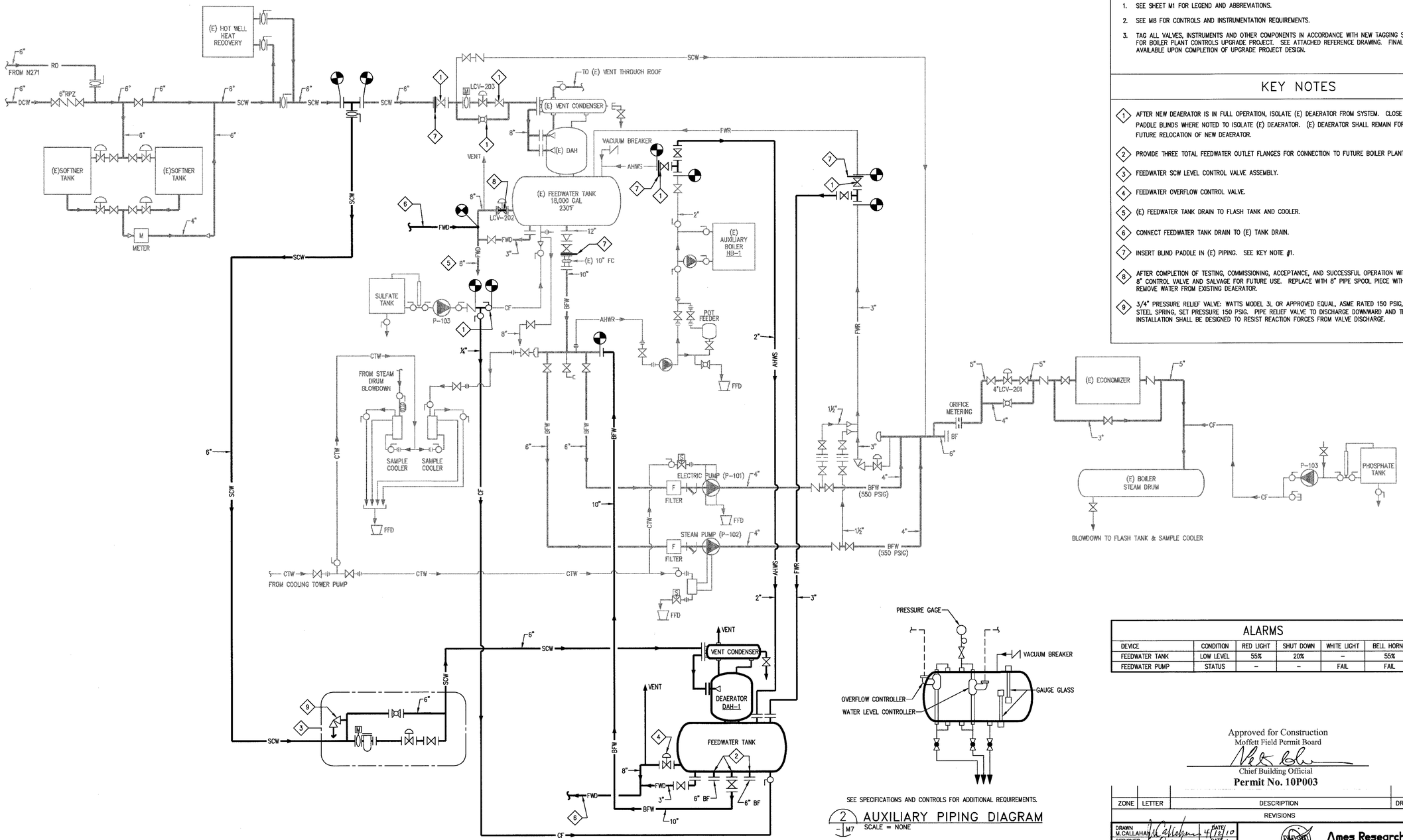

1 M7 SVS BOILER PLANT FEEDWATER PIPING DIAGRAM
SCALE = NONE

SEE SPECIFICATIONS AND CONTROLS FOR ADDITIONAL REQUIREMENTS.

2 M7 AUXILIARY PIPING DIAGRAM
SCALE = NONE

SHEET NOTES

1. SEE SHEET M1 FOR LEGEND AND ABBREVIATIONS.
2. SEE M8 FOR CONTROLS AND INSTRUMENTATION REQUIREMENTS.
3. TAG ALL VALVES, INSTRUMENTS AND OTHER COMPONENTS IN ACCORDANCE WITH NEW TAGGING SCHEME AS DESIGNATED FOR BOILER PLANT CONTROLS UPGRADE PROJECT. SEE ATTACHED REFERENCE DRAWING. FINAL TAG NAMES WILL BE AVAILABLE UPON COMPLETION OF UPGRADE PROJECT DESIGN.

KEY NOTES

1. AFTER NEW DEAERATOR IS IN FULL OPERATION, ISOLATE (E) DEAERATOR FROM SYSTEM. CLOSE THESE VALVES AND INSERT PADDLE BLINDS WHERE NOTED TO ISOLATE (E) DEAERATOR. (E) DEAERATOR SHALL REMAIN FOR FUTURE USE DURING FUTURE RELOCATION OF NEW DEAERATOR.
2. PROVIDE THREE TOTAL FEEDWATER OUTLET FLANGES FOR CONNECTION TO FUTURE BOILER PLANT.
3. FEEDWATER SCW LEVEL CONTROL VALVE ASSEMBLY.
4. FEEDWATER OVERFLOW CONTROL VALVE.
5. (E) FEEDWATER TANK DRAIN TO FLASH TANK AND COOLER.
6. CONNECT FEEDWATER TANK DRAIN TO (E) TANK DRAIN.
7. INSERT BLIND PADDLE IN (E) PIPING. SEE KEY NOTE #1.
8. AFTER COMPLETION OF TESTING, COMMISSIONING, ACCEPTANCE, AND SUCCESSFUL OPERATION WITH SVS SYSTEM, REMOVE (E) 8" CONTROL VALVE AND SALVAGE FOR FUTURE USE. REPLACE WITH 8" PIPE SPOOL PIECE WITH TWO BLIND FLANGES. REMOVE WATER FROM EXISTING DEAERATOR.
9. 3/4" PRESSURE RELIEF VALVE: WATTS MODEL 3L OR APPROVED EQUAL, ASME RATED 150 PSIG, BRONZE BODY, STAINLESS STEEL SPRING, SET PRESSURE 150 PSIG. PIPE RELIEF VALVE TO DISCHARGE DOWNWARD AND TERMINATE 6" ABOVE GRADE. INSTALLATION SHALL BE DESIGNED TO RESIST REACTION FORCES FROM VALVE DISCHARGE.

ALARMS

DEVICE	CONDITION	RED LIGHT	SHUT DOWN	WHITE LIGHT	BELL HORNS
FEEDWATER TANK	LOW LEVEL	55%	20%	–	55%
FEEDWATER PUMP	STATUS	–	–	FAIL	FAIL

Approved for Construction
Moffett Field Permit Board
Chief Building Official
Permit No. 10P003

ZONE	LETTER	DESCRIPTION	DRAWN	DATE	APPRVD
		REVISIONS			

		DATE
DRAWN	M.CALLAHAN	4/12/10
DESIGNED	M.CALLAHAN	4/12/10
CHECKED	P.WAN	4/12/10
PROJMGR	M.CALLAHAN	4/12/10
REQUESTER	J.BALDOWINO	04/14/2010
USER	J.BALBONI	4/12/10
SAFETY	D.FRASER	4/22/10
SUPERVISOR	S.FRANKEL	4·14·10

REGISTERED PROFESSIONAL ENGINEER MICHAEL S. CALLAHAN No. 27188 MECHANICAL STATE OF CALIFORNIA Exp. 6/30/11

Ames Research Center
Moffett Field, California

N234A SVS DEAERATOR/FEEDWATER TANK REPLACEMENT
MECHANICAL

FEEDWATER PIPING SCHEMATIC

SIZE	CAGE CODE		REV
D	25307	A 234A-1000-M7	
SCALE		INDEX	SHEET OF

FILE NAME: 234A-M07 04-12-2010

DWG: R:\234A\60046725.0001 (K80056) Feed Water Deaerator\500_CAD\FEEDWATER\M\Sheet\234A-M07_Feedwater Piping Schematic.dwg Version: 17.1s (LMS Tech) User: jjho
DATE: Apr 12, 2010 - 9:00:41 am

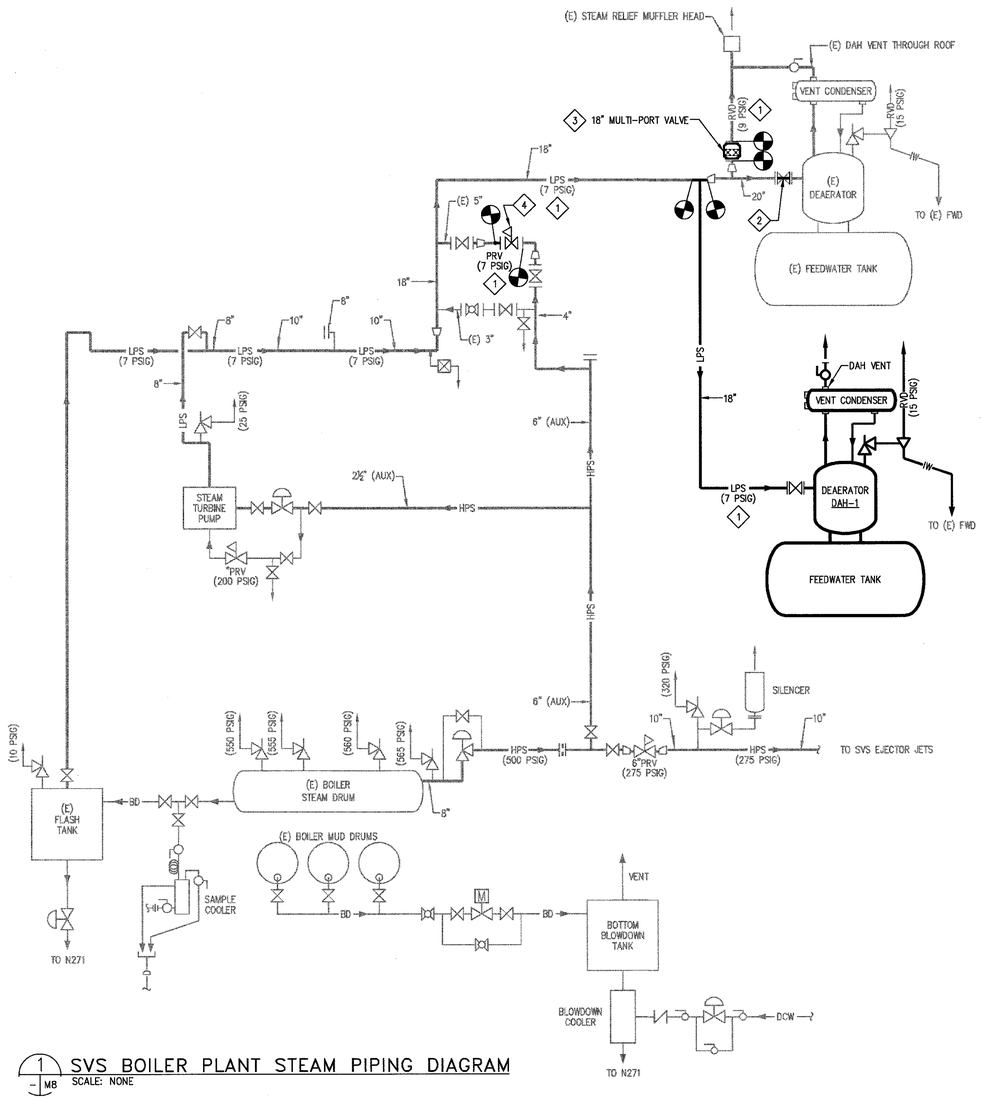

1 / M8 SVS BOILER PLANT STEAM PIPING DIAGRAM
SCALE: NONE

PIPING CLASSIFICATIONS

PIPE SYSTEM	NORMAL OPERATING PRESSURE PSIG	MAXIMUM DESIGN PRESSURE PSIG	SAFETY RELIEF PRESSURE PSIG	TEMPERATURE LIMITS °F	REMARKS
DOMESTIC COLD WATER (DCW)	75	150	NA	50°F–80°F	FOR REFERENCE ONLY
REVERSE OSMOSIS WATER (RO)	75	150	NA	50°F–80°F	FOR REFERENCE ONLY
SOFT COLD WATER (SCW)	75	150	150	50°F–80°F	MAKE-UP WATER
BOILER FEEDWATER PUMP SUCTION (BFW)	25	150	NA	50°F–244°F	
BOILER FEEDWATER PUMP DISCHARGE (BFW)	550	567	NA	50°F–244°F	FOR REFERENCE ONLY
BOILER FEEDWATER RECIRCULATION (FWR)	7	15	15	50°F–244°F	
BOILER FEEDWATER DRAIN (FWD)	7	15	15	50°F–244°F	
AUXILIARY HEATING WATER SUPPLY (AHWS)	7	125	15	50°F–244°F	
HIGH PRESSURE STEAM (HPS)	415	567	565	50°F–483°F	FOR REFERENCE ONLY
SVS STEAM (SVS)	275	320	320	50°F–414°F	FOR REFERENCE ONLY
LOW PRESSURE STEAM (LPS)	7	15	15	50°F–244°F	
INSTRUMENT AIR (IA)	32/40	125	32/40	50°F–100°F	CLASSIFIED B31.3 CATEGORY D

SEQUENCE OF OPERATION

1. GENERAL: PROVIDE CONTROL SYSTEM FOR NEW EQUIPMENT AND DEVICES THAT REPLICATES FUNCTIONALITY, MONITORING AND INSTRUMENTATION OF EXISTING BOILER CONTROL SYSTEM.
2. DEAERATOR HEATER: MAINTAIN CONSTANT PRESSURE FOR STEAM BLANKET IN TANK AND STABLE TEMPERATURE CONTROL OF FEEDWATER UTILIZING EXISTING STEAM PRESSURE REGULATOR ASSEMBLY TO SUPPLEMENT EXHAUST STEAM FROM FLASH TANK AND STEAM PUMP. ADJUST STEAM PRESSURE SET POINT MANUALLY FROM REMOTE CONTROLLER. INSTALL PRESSURE FEEDBACK PORT AND TRANSDUCER TO CONTROL EXISTING REGULATOR ACTUATOR.
3. FEEDWATER TANK: OPEN FEEDWATER AUTOMATIC ISOLATION VALVE WHEN STEAM PRESSURE EXCEEDS 220 PSIG. MAINTAIN CONSTANT OPERATING FEEDWATER LEVEL IN TANK (APPROXIMATELY 75% OF TANK CAPACITY) BY MODULATING SCW FEEDWATER MAKE-UP CONTROL VALVE ASSEMBLY. ADJUST OPERATING WATER LEVEL SET POINT MANUALLY FROM REMOTE CONTROLLER. SOUND ALARM AND ILLUMINATE RED LAMP ON ANNUNCIATOR WHEN FEEDWATER LEVEL DROPS TO 55% OF TANK CAPACITY. INITIATE EXISTING BOILER SHUTDOWN SEQUENCE WHEN FEEDWATER LEVEL DROPS TO 20% OF TANK CAPACITY. MAINTAIN MAXIMUM WATER LEVEL IN TANK BELOW MAXIMUM OVERFLOW LIMIT SET POINT BY MODULATING OVERFLOW LEVEL CONTROL VALVE.
4. MONITORING: MONITOR TEMPERATURE, PRESSURE, WATER LEVEL WITH INSTRUMENTS AND SENSORS.
5. WATER TREATMENT: UTILIZE EXISTING WATER SOFTENING AND CHEMICAL TREATMENT SYSTEMS AND CONTROLS.
6. INSTRUMENT AIR: UTILIZE EXISTING MONITORING, ALARM, AND CUTOUT.

SHEET NOTES

1. REFER TO SHEET M1 FOR LEGEND & ABBREVIATIONS.
2. DESIGN NEW CONTROLS TO BE COMPATIBLE WITH DESIGN OF BOILER PLANT CONTROLS UPGRADE PROJECT. SEE ATTACHED REFERENCE DRAWING. FINAL UPGRADE PROJECT CONTROL SPECIFICATIONS WILL BE AVAILABLE UPON COMPLETION OF UPGRADE PROJECT DESIGN.
3. TAG ALL VALVES, INSTRUMENTS AND OTHER COMPONENTS IN ACCORDANCE WITH NEW TAGGING SCHEME AS DESIGNATED FOR BOILER PLANT CONTROLS UPGRADE PROJECT. SEE ATTACHED REFERENCE DRAWING. FINAL TAG NAMES WILL BE AVAILABLE UPON COMPLETION OF UPGRADE PROJECT DESIGN.
4. CONTROLS AND TAGGING FOR NEW DEAERATOR SHALL REPLICATE THOSE PLANNED FOR EXISTING DEAERATOR. THERE IS NO INTENT TO HAVE BOTH SYSTEMS OPERATIONAL SIMULTANEOUSLY. CONTROL SYSTEM SHALL ADDRESS ONLY ONE DEAERATOR AT ANY ONE TIME.

CONTROL NOTES

1. DESIGN AND INSTALL CONTROL SYSTEM TO PERFORM AND FUNCTION AS REQUIRED BY SEQUENCE OF OPERATION. DESIGN AND INSTALLATION SHALL BE INDUSTRIAL CONTROLS WHICH EQUAL OR EXCEED EXISTING SVS BOILER PLANT CONTROL STANDARDS. PROVIDE ALL EQUIPMENT, SENSORS, ACTUATORS, TRANSDUCERS, DEVICES, COMPONENTS, WIRING, CONDUIT, INSTRUMENT AIR, CONNECTIONS AND PROGRAMMING NECESSARY FOR A FULLY FUNCTIONAL SYSTEM.
2. COORDINATE NEW CONTROLS WITH EXISTING FUNCTIONS OF BOILER PLANT CONTROL AND MONITORING SYSTEM. DESIGN CONTROLS TO BE COMPATIBLE WITH NEW BOILER PLANT CONTROLS UPGRADE PROJECT. NEW CONTROLS AND INSTRUMENTS SHALL MEET DEVICE SPECIFICATIONS OF UPGRADE PROJECT, INCLUDING ACCURACY AND RELIABILITY. SELECT CONTROLS FOR EASE OF CONNECTION AND CHANGEOVER TO BOILER PLANT CONTROLS UPGRADE IN FUTURE, IF UPGRADE PROJECT IS NOT COMPLETED PRIOR. SEE ATTACHED REFERENCE DRAWING FOR PARTIAL DESCRIPTION OF BOILER PLANT CONTROLS UPGRADE PROJECT.
3. CONTROLS SHALL BE INDUSTRIAL GRADE QUALITY FOR RELIABILITY. CONTROL VALVES AND ALL PIPING DEVICES SHALL CONFORM TO ASME B31.3.
4. INSTALL ALL WIRING AND CABLES IN CONDUIT, PER ELECTRICAL SPECIFICATIONS. MINIMUM CONDUIT SIZE IS 3/4". INSTALL WIRING FOR CLASS 1 CIRCUITS (EQUAL OR > 100 VA) AND CLASS 2 CIRCUITS (<100 VA) IN SEPARATE CONDUITS. SEE ELECTRICAL DRAWINGS FOR OTHER RELATED WORK.
5. INSTRUMENT AIR: EXTEND (E) INSTRUMENT AIR PIPING WHERE NEEDED FOR NEW CONTROLS. INSTALL SOV IN BOTH EXISTING BRANCH AND NEW BRANCH LINE TO FACILITATE FUTURE CHANGEOVER WHEN TEE CONNECTION IS MADE TO EXISTING PIPE. PIPING AND VALVES SHALL CONFORM TO B31.3 AND AS SPECIFIED. ON SHEET M1.
6. SUBMIT CUT SHEETS FOR ALL PROPOSED EQUIPMENT, INCLUDING WIRING DIAGRAMS AND CONTROL DETAILS.
7. ALL CONTROL DEVICES, WIRING AND CONDUIT SHALL BE NEW. SPLICING OF WIRES IS NOT ACCEPTABLE.
8. PROVIDE PROTECTED POWER TO ALL CONTROL PANELS AND DEVICES. EXTEND 24 VAC POWER TO ALL LOW VOLTAGE CONTROL DEVICES FROM LOCAL PANEL OR CONTROLLER.
9. GROUND LOW VOLTAGE ANALOG TSP CABLE SHIELD IN LOCAL PANEL. GROUND LOW VOLTAGE TSP CABLE FOR DIGITAL CONTROLS AT FIELD DEVICE.
10. INSTRUMENTATION: MATCH EXISTING INSTRUMENTATION POINTS. PROVIDE INSTRUMENT ACCURACY AS REQUIRED BY CONTROLS UPGRADE PROJECT. WHERE INDICATED, REMOTE INDICATION SHALL BE PROVIDED AT BOILER PLANT CONTROL ROOM. INCLUDE THE FOLLOWING POINTS, BUT NOT LIMITED TO:
    A. PRESSURE INDICATION:
        STEAM AT MULTI-PORT VALVE (LOCAL)
        STEAM IN DEAERATOR (LOCAL AND REMOTE)
        STEAM AT VENT CONDENSER OUTLET (LOCAL)
    B. TEMPERATURE INDICATION:
        STEAM IN DEAERATOR (LOCAL AND REMOTE)
        FEEDWATER IN TANK (LOCAL)
    C. WATER LEVEL INDICATION:
        FEEDWATER IN TANK (LOCAL)
        FEEDWATER LOW LEVEL ALARM (REMOTE)
        FEEDWATER LOW LEVEL CUTOUT (REMOTE)
    D. VALVE POSITION:
        SCW FEEDWATER MAKE-UP VALVE CLOSED ALARM (REMOTE)
11. REMOTE CONTROLLERS: PROVIDE CONTROL VALVES AND ACTUATORS WHICH UTILIZE CONTROLLERS SPECIFIED FOR CONTROLS UPGRADE PROJECT. IF CONTROLS UPGRADE PROJECT HAS NOT BEEN COMPLETED PRIOR, PROVIDE TRANSDUCERS AS NEEDED TO UTILIZE EXISTING CONTROLLERS IN CONTROL ROOM PANEL.
12. ALARMS: REFER TO ALARM TABLE ON SHEET M7 FOR EXISTING ALARMS. COORDINATE NEW ALARM ANNUCIATION WITH BOILER PLANT CONTROLS UPGRADE PROJECT.

KEY NOTES

1. OPERATING PRESSURES LISTED ARE NOMINAL FOR REFERENCE ONLY. ACTUAL OPERATING STEAM AND MULTIPORT RELIEF VALVE PRESSURE MAY BE ADJUSTED BY BOILER PLANT OPERATOR, TYPICAL.
2. AFTER COMPLETION OF TESTING, COMMISSIONING, ACCEPTANCE, AND SUCCESSFUL OPERATION WITH SVS SYSTEM, REMOVE (E) 20" GATE VALVE AND SALVAGE FOR FUTURE USE. REPLACE WITH 20" PIPE SPOOL PIECE WITH TWO BLIND FLANGES. REMOVE WATER FROM EXISTING DEAERATOR.
3. REPLACE EXISTING 18" MULTI-PORT VALVE (COCHRANE) WITH NEW 18" MULTI-PORT VALVE. REFER TO NOTE 5 ON SHEET M2 ON MECHANICAL SUPPLEMENTAL SPECIFICATION FOR MULTI-PORT VALVE SPECIFICATION.
4. REPLACE EXISTING 2" STEAM PRESSURE REGULATOR WITH NEW REGULATOR VALVE. REFER TO NOTE 20 OF DEAERATOR PACKAGE SPECIFICATION ON SHEET M2 FOR VALVE SPECIFICATION.

Approved for Construction
Moffett Field Permit Board
Chief Building Official
Permit No. 10P003

REGISTERED PROFESSIONAL ENGINEER MICHAEL S. CALLAHAN M 27188 MECHANICAL STATE OF CALIFORNIA
Exp. 6/30/11

ZONE	LETTER	DESCRIPTION	DRAWN	DATE	APPRVD
		REVISIONS			

		DATE
DRAWN M.CALLAHAN		4/12/10
DESIGNED M.CALLAHAN		4/12/10
CHECKED P.WAN		4/12/10
PROJMGR M.CALLAHAN		4/12/10
REQUESTER J.BALDOYRNO		04/12/2010
USER J.BALBONI		4/12/10
SAFETY D.FRASER		4/22/10
SUPERVISOR S.FRANKEL		4/14/10

Ames Research Center
Moffett Field, California

N234A SVS DEAERATOR/FEEDWATER TANK REPLACEMENT
MECHANICAL

STEAM PIPING SCHEMATIC

SIZE	CAGE CODE		REV
D	25307	A 234A-1000-M8	
SCALE		INDEX	SHEET OF

FILE NAME: 234A-M08 04-12-2010

DWG: R:\234A\6034675.0001 (K80056) Feed Water Deaerator\300_CAD\FEEDWATER\M\Sheet\234A-M08_Steam Piping Schematic.dwg Version: 17.1s (LMS Tech) User: jjlho
DATE: Apr 12, 2010 - 9:00:42 am

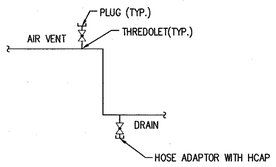

A. FOR PIPE SIZES 4" TO 8" USE 1/2" BALL VALVE

B. FOR PIPE SIZES 10" TO 14" USE 3/4" BALL VALVE

1 M9 VENT AND DRAIN
SCALE: NO SCALE

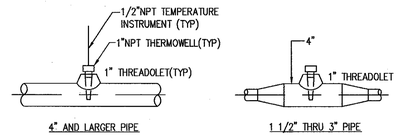

DETAIL NOTE: THREADOLETS SHALL CONFORM TO MSS SP-97.

2 M9 THREADED THERMOWELL CONNECTION
SCALE: NO SCALE

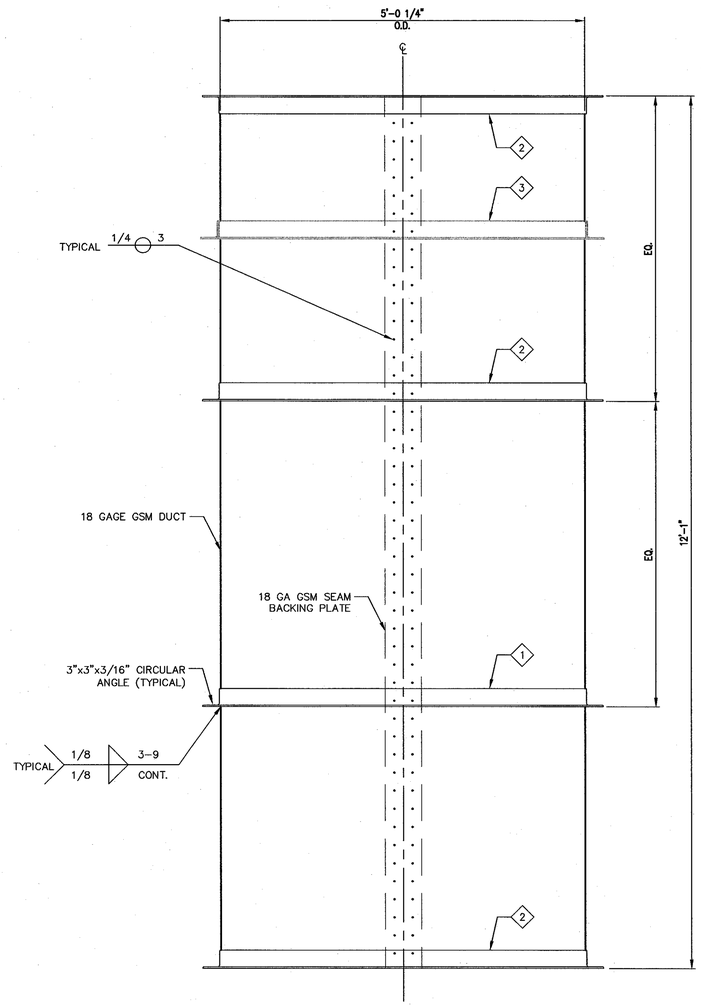

3 M9 MUFFLER STACK EXTENSION
SCALE: 1"=1-0"

SHEET NOTES

1. SEE SHEETS M1 AND M2 FOR ABBREVIATIONS, GENERAL NOTES, AND ADDITIONAL SPECIFICATIONS.

KEY NOTES

1. MUFFLER EXTENSION REINFORCING AND SUPPORT ANGLE: SEE DETAIL B ON SHEET S5 FOR LOCATION AND CONNECTION TO STRUCTURAL SUPPORT BRACKET AND BRACE.
2. TYPICAL MUFFLER EXTENSION REINFORCING ANGLE: LOCATE ANGLES TO AVOID CONFLICT WITH UPPER STRUCTURAL GUIDE BRACKET PER DETAIL A ON SHEET S5. OTHERWISE, SPACE ANGLES UNIFORMLY.
3. GUIDE ANGLE ON UPPER STRUCTURAL GUIDE BRACKET AND BRACE PER DETAIL A ON SHEET S5. THIS GUIDE ANGLE IS NOT ATTACHED TO MUFFLER EXTENSION.

Approved for Construction
Moffett Field Permit Board
Chief Building Official
Permit No. 10P003

ZONE	LETTER	DESCRIPTION	DRAWN	DATE	APPRVD

REVISIONS

		DATE
DRAWN J.HO		4/22/10
DESIGNED M.CALLAHAN		4/22/10
CHECKED P.WAN		4/22/10
PROJMGR M.CALLAHAN		4/22/10
REQUESTER J.BALDOVINO		04/26/2010
USER J.BALBONI		4/26/10
SAFETY D.FRASER		4/23/10
SUPERVISOR S.FRANKEL		5-3-10

REGISTERED PROFESSIONAL ENGINEER MICHAEL S. CALLAHAN M 20188 MECHANICAL STATE OF CALIFORNIA
Exp. 6/30/11

Ames Research Center
Moffett Field, California

N234A SVS DEAERATOR/FEEDWATER TANK REPLACEMENT

MECHANICAL
DETAILS

SIZE	CAGE CODE	REV
D	25307	A 234A-1000-M9

SCALE | INDEX | SHEET 1 OF 3

FILE NAME: 234A-M09 04-22-2010

DWG: R:\234A\60046725.0001 (K80056) Feed Water Deaerator\500_CAD\FEEDWATER\M\Sheet\234A-M09_1_ DETAILS.dwg Version: 17.1s (LMS Tech) User: mscollah
DATE: Apr 23, 2010 - 9:07:26 am

DWG NO.	SH.	REV
A234A-1000-M9	2	

SHEET NOTES

1. SEE SHEET M1 FOR MECHANICAL ABBREVIATIONS AND GENERAL NOTES.
2. SEE PIPING SUPPORT TABLE ON SHEET M4 (2 OF 2)

KEY NOTES

1. SEE STRUCTURAL DRAWINGS FOR REINFORCED CONCRETE FOOTING AND ANCHOR BOLTS.

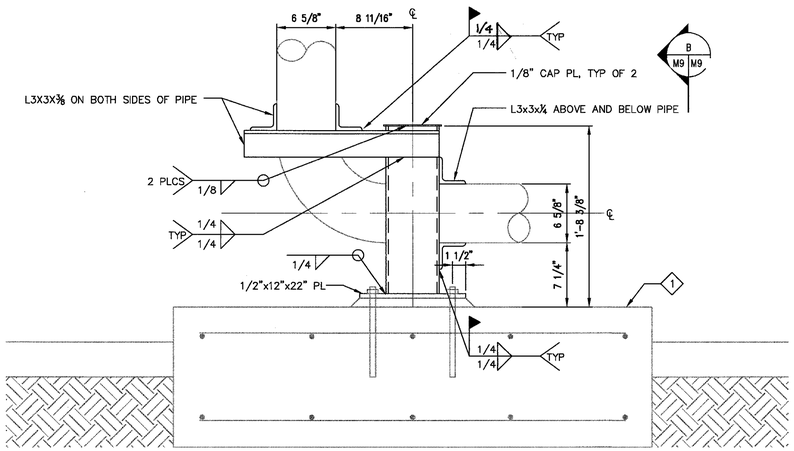

A PSM-03 PIPE SUPPORT
M4-2 M9-2 SCALE: 1 1/2" = 1'-0"

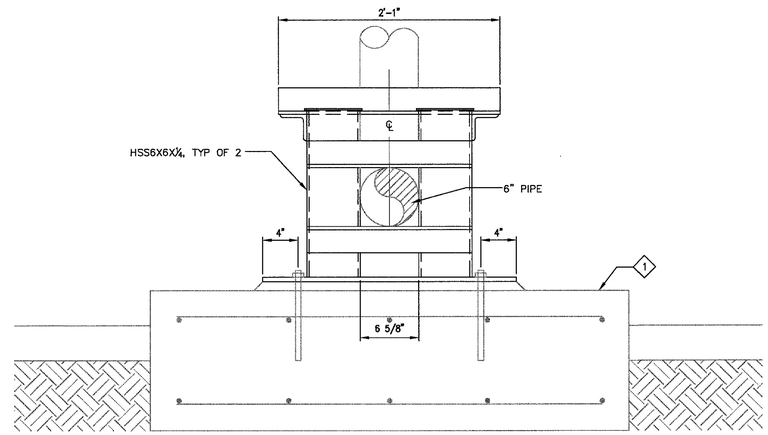

B SECTION: PSM-03
M9-2 M9-2 SCALE: 1 1/2" = 1'-0"

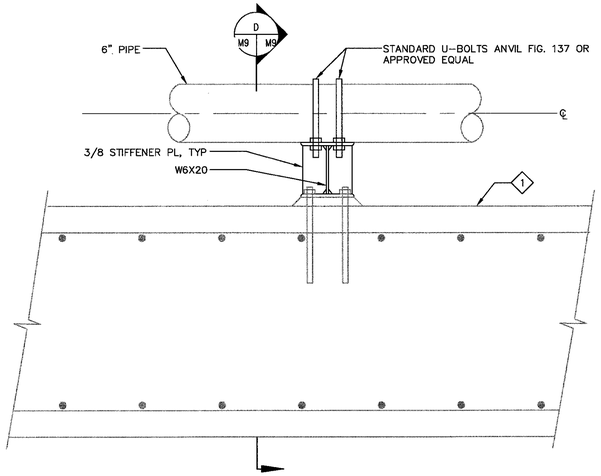

C PSM-04 & PSM-05 PIPE SUPPORT
M4-2 M9-2 SCALE: 1 1/2" = 1'-0"

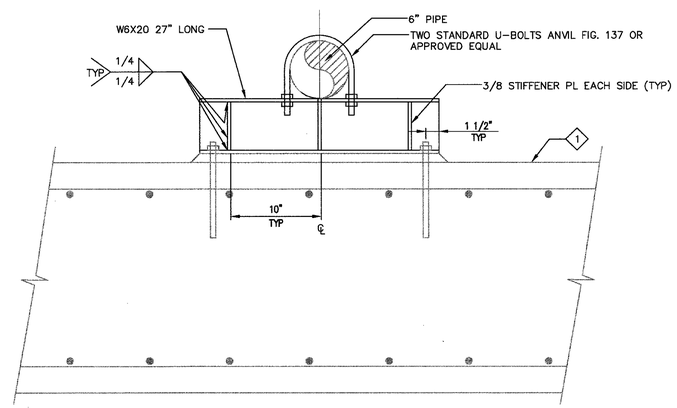

D SECTION: PSM-04 & PSM-05
M9-2 M9-2 SCALE: 1 1/2" = 1'-0"

Approved for Construction
Moffett Field Permit Board

Chief Building Official
Permit No. 10P003

ZONE	LETTER	DESCRIPTION	DRAWN	DATE	APPRVD
		REVISIONS			

DRAWN F.BONALDI		DATE 4-12-10
DESIGNED J.VAN CORBAN		DATE 4/12/10
CHECKED A.FIROUZ		DATE 4/12/10
PROJMGR M.CALLAHAN		DATE 4/12/10
REQUESTER J.BALDOVINO		DATE 4/12/2010
USER J.BALBONI		DATE 4/12/10
SAFETY D.FRASER		DATE 4/22/10
SUPERVISOR S.FRANKEL		DATE 4/14/10
REVIEWED W.LEE		DATE 4/14/10

REGISTERED PROFESSIONAL ENGINEER
MICHAEL S. CALLAHAN
M 21789
MECHANICAL
STATE OF CALIFORNIA
Exp. 6/30/11

Ames Research Center
Moffett Field, California

N234A SVS DEAERATOR/FEEDWATER TANK REPLACEMENT
MECHANICAL

PIPE SUPPORT DETAILS

SIZE	CAGE CODE	REV
D	25307	A 234A-1000-M9
SCALE		INDEX SHEET 2 OF 3

FILE NAME: 234A-M09 04-12-2010

DWG: R:\234A\60046725.0001 (K80056) Feed Water Deaerator\500_CAD\FEEDWATER\M\Sheet\234A-M09_2_DETAILS.dwg Version: 17.1s (LMS Tech) User: jjho
DATE: Apr 12, 2010 - 9:00:48 am

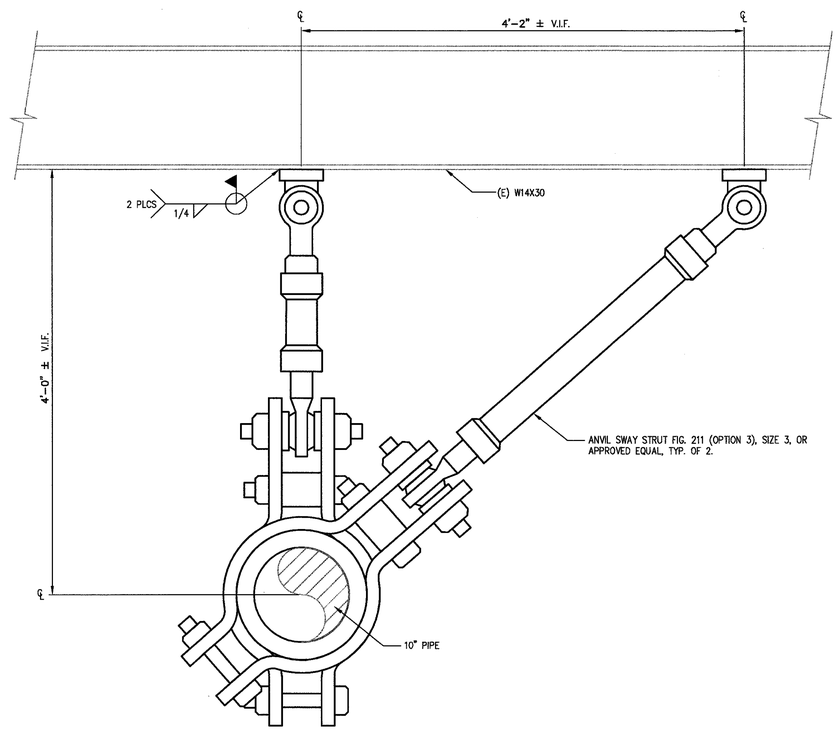

E PSF-01 PIPE SUPPORT
M4-2 | M9-3 SCALE: 1 1/2" = 1'-0"

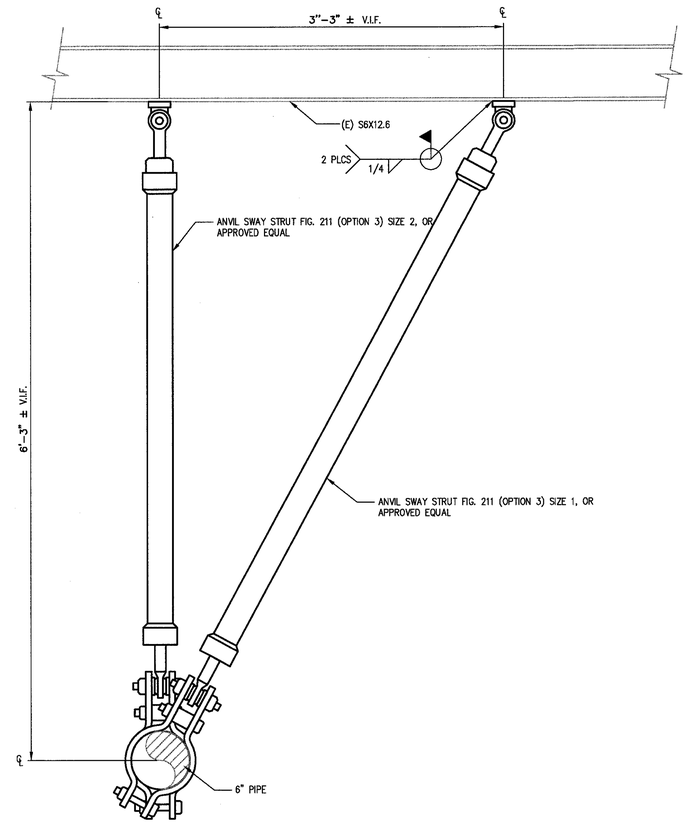

F PSM-01 & PSM-02 PIPE SUPPORTS
M4-2 | M9-3 SCALE: 1-1/2"= 1'-0"

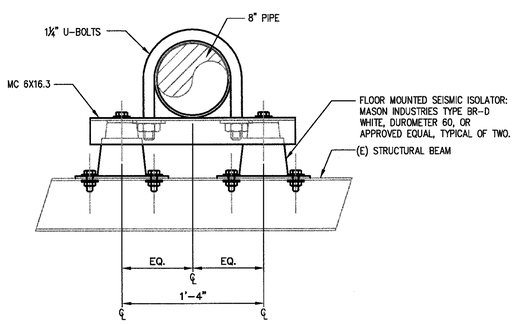

G PSD-02 PIPE SUPPORT
M4-2 | M9-3 SCALE: 1 1/2" = 1'-0"

SHEET NOTES

1. FOR STRUCTURAL GENERAL NOTES SEE S1.
2. FOR LOCATION OF PIPE SUPPORTS SEE MECHANICAL DRAWINGS.
3. FOR PIPING REQUIREMENTS SEE MECHANICAL DRAWINGS.

Approved for Construction
Moffett Field Permit Board
Chief Building Official
Permit No. 10P003

ZONE	LETTER	DESCRIPTION	DRAWN	DATE	APPRVD

REVISIONS

REGISTERED PROFESSIONAL ENGINEER MICHAEL S. CALLAHAN 24188 MECHANICAL STATE OF CALIFORNIA
Exp. 6/30/11

DRAWN J.HO		DATE 4/12/2010
DESIGNED J.VAN CORBACH		DATE 4/12/10
CHECKED M.CALLAHAN		DATE 4/12/10
PROJMGR M.CALLAHAN		DATE 4/12/10
REQUESTER J.BALDQUIND		DATE 04/14/2010
USER J.BALBONI		DATE 4/12/10
SAFETY D.FRASER		DATE 4/22/10
SUPERVISOR S.FRANKEL		DATE 4-14-10
REVIEWED W.LEE		DATE 4-26-10

Ames Research Center
Moffett Field, California

N234A SVS DEAERATOR/FEEDWATER TANK REPLACEMENT
MECHANICAL

PIPE SUPPORT DETAILS

SIZE	CAGE CODE		REV
D	25307	A 234A-1000-M9	
SCALE		INDEX	SHEET 3 OF 3

FILE NAME: 234A-M09 04-12-2010

DWG: R:\234A\60046725.0001 (K80056) Feed Water Deaerator\500_CAD\FEEDWATER\M\Sheet\234A-M09_3_DETAILS.dwg Version: 17.1s (LMS Tech) User: jjho
DATE: Apr 12, 2010 - 9:20:51 am

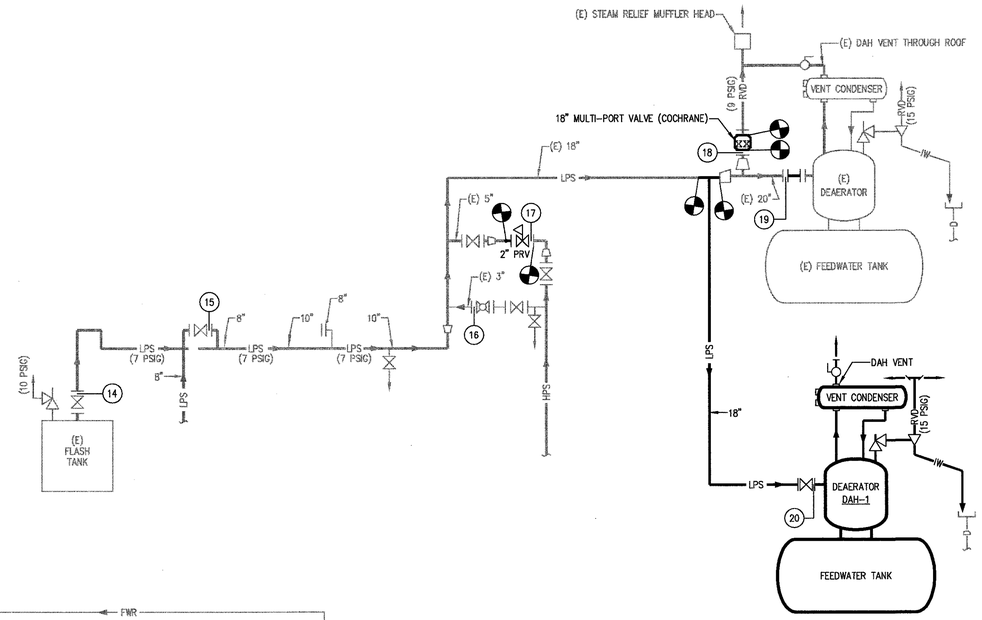

2 SVS BOILER PLANT STEAM PRESSURE TEST PLAN

SCALE: NONE

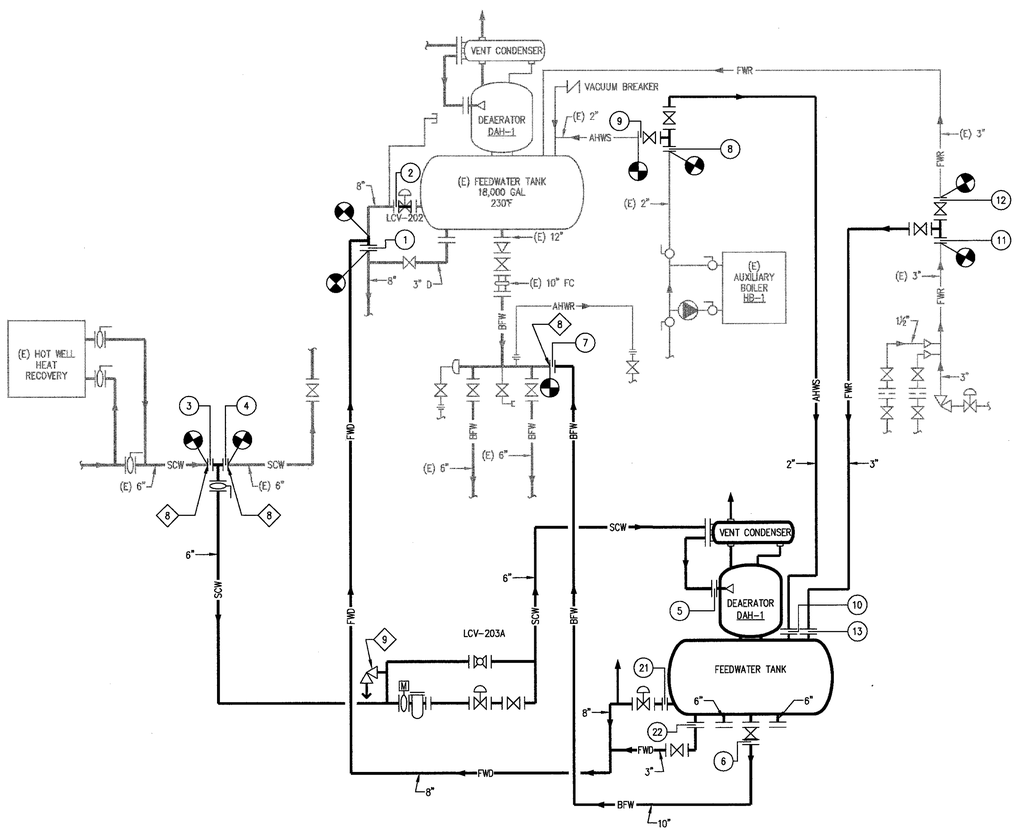

1 SVS BOILER PLANT FEEDWATER PRESSURE TEST PLAN

SCALE = NONE

SHEET NOTES

1. SEE SHEET M1 FOR PRESSURE TEST PREPARATION AND PROCEDURE.
2. PRESSURE TEST NEW PIPING. PERFORM HYDROSTATIC PRESSURE TEST, UNLESS OTHERWISE NOTED.
3. NOT ALL VALVES ARE ILLUSTRATED ON THIS SHEET, REFERENCE ALL DRAWINGS AND SPECIFICATIONS. PROVIDE ALL PARTS NECESSARY FOR A COMPLETE SYSTEM.
4. INSTALL BLIND FLANGE, PADDLE BLIND OR TEST PLUG AT LOCATION OF BOUNDARY POINT AS INDICATED ON PRESSURE TEST SCHEDULE.
5. ALL VALVES BETWEEN TEST BOUNDARIES, EXCEPT BLEED AND PURGE VALVES MUST BE OPEN DURING PRESSURE TEST.

KEY NOTES

1. TEST PRESSURE FROM BOUNDARY POINTS #3 TO 5: 225 PSIG.
2. TEST PRESSURE FROM BOUNDARY POINTS #6 TO 7: 225 PSIG.
3. TEST PRESSURE FROM BOUNDARY POINTS #8 TO 10: 225 PSIG.
4. TEST PRESSURE FROM BOUNDARY POINTS #11 TO 13: 225 PSIG.
5. TEST PRESSURE FROM BOUNDARY POINTS #14 TO 20: 7 PSIG. PNEUMATICALLY TEST (E) LPS AT OPERATING PRESSURE USING ALTERNATE LEAK TEST PROCEDURES PER B31.3, SECTION 345.9. PRIOR TO TEST, EXAMINE NEW AND EXISTING PIPE AS FOLLOWS: 100% RT ON NEW PIPING, AND 100% MT ON EXISTING PIPING.
6. TEST PRESSURE FROM BOUNDARY POINTS #1, #2, #21 AND #22: 225 PSIG.
7. TEST LAST WELD BETWEEN NEW FLANGE AND EXISTING PIPE USING "EXPANSION SEAL TECHNOLOGIES" FLANGE WELD TEST PLUG, OR APPROVED EQUAL.
8. NEW FLANGES MAY BE OMITTED AT THIS POINT, IF OPTIONAL HYDROSTATIC TEST PLAN IS ADOPTED. OPTIONAL HYDROSTATIC TEST PLAN: EXTEND TEST BOUNDARY TO (E) FLANGES, AND INSTALL PADDLE BLINDS AT EXTENDED BOUNDARY. MINIMIZE EXTENT OF (E) PIPE WITHIN TEST BOUNDARY. SUBMIT NEW HYDROSTATIC TEST PLAN WITH BOUNDARY POINTS TO NASA FOR APPROVAL.
9. REMOVE PRESSURE RELIEF VALVE AND CAP CONNECTION DURING HYDROSTATIC TEST. REPLACE VALVE AFTER TEST.

PRESSURE TEST SCHEDULE

BOUNDARY POINT #	TYPE OF FITTING	SHEET ZONE LOCATION	REMARKS
1	8" PADDLE BLIND	B7	6 7
2	8" PADDLE BLIND	B7	6
3	6" PADDLE BLIND	B8	1 7
4	6" PADDLE BLIND	B8	1 7
5	6" PADDLE BLIND	A6	1
6	10" PADDLE BLIND	A6	2
7	10" PADDLE BLIND	B6	2 7
8	2" PADDLE BLIND	C6	3 7
9	2" PADDLE BLIND	C6	3 7
10	2" PADDLE BLIND	A6	3
11	3" PADDLE BLIND	B5	4 7
12	3" PADDLE BLIND	B5	4 7
13	3" PADDLE BLIND	A13	4
14	10" PADDLE BLIND	C6	5
15	8" PADDLE BLIND	C6	5
16	3" PADDLE BLIND	D5	5
17	2" PADDLE BLIND	D5	5
18	18" PADDLE BLIND	D4	5
19	20" PADDLE BLIND	D3	5
20	18" PADDLE BLIND	C3	5
21	8" PADDLE BLIND	A6	6
22	3" PADDLE BLIND	A6	6

LEGEND:

(XX) BOUNDARY POINT

Approved for Construction
Moffett Field Permit Board
Chief Building Official
Permit No. 10P003

REGISTERED PROFESSIONAL ENGINEER MICHAEL S. CALLAHAN M 21488 MECHANICAL STATE OF CALIFORNIA
Exp. 6/30/11

ZONE	LETTER	DESCRIPTION	DRAWN	DATE	APPRVD

REVISIONS

		DATE
DRAWN J.HO		4/12/2010
DESIGNED J.HO		4/12/2010
CHECKED P.WAN		4/12/10
PROJMGR M.CALLAHAN		4/12/10
REQUESTER J.BALDOVINO		04/14/2010
USER J.BALBONI		4/12/10
SAFETY D.FRASER		4/22/10
SUPERVISOR S.FRANKEL		4-14-10

Ames Research Center
Moffett Field, California

N234A SVS DEAERATOR/FEEDWATER TANK REPLACEMENT
MECHANICAL

PRESSURE TEST PLAN AND SCHEDULE

SIZE	CAGE CODE	REV
D	25307	A 234A-1000-M10

SCALE | INDEX | SHEET | OF

FILE NAME: 234A-M10 04-12-2010

DWG: R:\234A\60046725.0001 (k80056) Feed Water Deaerator\500_CAD\FEEDWATER\M\Sheet\234A-M10_Hydrostatic test Plan and Schedule.dwg Version: 17.1s (LMS Tech) User: jjho
DATE: Apr 12, 2010 - 9:00:54 am

ELECTRICAL NOTES

1. THE COMPLETE ELECTRICAL INSTALLATION SHALL BE IN ACCORDANCE WITH THE LATEST EDITION OF THE CALIFORNIA ELECTRICAL (CEC) CODE AND THE AMES STANDARD CONSTRUCTION SPECIFICATIONS DATED AUGUST 2, 2006.
2. EXISTING EQUIPMENT AND/OR ELECTRICAL WIRING WHICH IS TO REMAIN, BUT HAS TO BE REMOVED TO FACILITATE THE INSTALLATION OF THE NEW EQUIPMENT SHALL BE RESTORED TO ITS ORIGINAL OPERATING CONDITION.
3. ELECTRICAL EQUIPMENT AND FEEDERS SHALL BE SUPPORTED AND/OR ANCHORED IN ACCORDANCE WITH CALIFORNIA BUILDING CODE ZONE 4 SEISMIC REQUIREMENTS.
4. WHERE OUTLETS, SWITCHES AND OTHER ELECTRICAL EQUIPMENT ARE REMOVED AND/OR CONDUIT IS CUT OFF, ALL EXISTING CONDUCTORS SHALL BE REMOVED BACK TO THE PANELBOARD THAT IS TO REMAIN.
5. EXISTING CONDUCTORS REMOVED FROM SERVICE SHALL NOT BE USED FOR NEW WORK UNDER THIS CONTRACT.
6. EXISTING CONDUIT RUNS REMAINING IN PLACE MAY BE UTILIZED FOR THE RENOVATION WORK, PROVIDED THAT THE CONDUIT IS OF ADEQUATE SIZE PER THE CALIFORNIA ELECTRICAL CODE FOR THE NUMBER AND SIZE OF CONDUCTORS BEING INSTALLED. CONDUCTORS SHALL BE OF THE SAME VOLTAGE (480Y/277V OR 208Y/120V) AND CONNECTED TO THE SAME PANEL.
7. BLANK COVERS SHALL BE INSTALLED WHEREVER A DEVICE IS REMOVED AND OUTLET BOX REMAINS IN PLACE. PAINT TO MATCH COLOR OF WALL.
8. WHERE EXISTING CONDUIT AND/OR CIRCUIT HAS BEEN INTERRUPTED BY REMOVAL OF AN OUTLET, WALL, OR PORTION OF THE CIRCUIT, THE REMAINING CONDUIT AND/OR CIRCUIT SHALL BE REROUTED, EXTENDED AND RECONNECTED AS REQUIRED TO PROVIDE CONTINUITY OF THE CIRCUIT THAT IS TO REMAIN IN SERVICE.
9. THE CONSTRUCTION MANAGER RETAINS FIRST SALVAGE RIGHTS TO ALL EXISTING EQUIPMENT REMOVED UNDER THIS CONTRACT. THE CONTRACTOR SHALL CONSULT WITH THE CONTRACTING OFFICER FOR DISPOSITION OF THE EXISTING EQUIPMENT TO BE REMOVED. THE CONTRACTOR SHALL INCLUDE IN HIS BID PROPOSAL ALL COSTS RELATED TO THE DISPOSAL OF THE EXISTING EQUIPMENT REMOVED UNDER THIS CONTRACT.
10. ALL FEEDER AND BRANCH CIRCUIT CONDUITS SHALL BE INSTALLED CONCEALED IN FINISHED AREA, UNLESS OTHERWISE NOTED.
11. ALL PENETRATIONS THROUGH FIRE RATED WALLS SHALL BE TOTALLY SEALED TO PREVENT THE SPREAD OF SMOKE, FIRE, TOXIC GASES, AND WATER THROUGH THE PENETRATION BEFORE, DURING AND AFTER A FIRE CONDITION. THE FIRE RATING OF THE SEALED PENETRATION SHALL BE AT LEAST THAT OF THE WALL INTO WHICH IT IS INSTALLED. THE SEAL SHALL PERMIT THE VIBRATION, EXPANSION AND/OR CONTRACTION OF THE CONDUIT PASSING THROUGH THE PENETRATION WITHOUT THE SEAL CRACKING OR CRUMBLING.
12. THE CONTRACTOR SHALL MAINTAIN AT THE JOB SITE, AN UP-TO-DATE "AS-BUILT" DRAWING SET. THE "AS-BUILT" DRAWING SET SHALL BE RED-LINED TO REFLECT ALL APPROVED CHANGES TO THE DESIGN DRAWINGS. THE "AS-BUILT" DRAWING SET SHALL BE KEPT CLEAN AND IN GOOD CONDITION AND SHALL BE TURNED OVER TO THE CONSTRUCTION MANAGER AT THE COMPLETION OF THE PROJECT.
13. UPON COMPLETION OF HIS WORK, THE CONTRACTOR SHALL DEVELOP A TEST PROCEDURE AND PERFORM A COMPLETE FUNCTIONAL TEST TO DEMONSTRATE TO THE CONSTRUCTION MANAGER THAT THE NEW INSTALLATION IS OPERATING AS INTENDED. ANY DEFECTS OR DEFICIENCIES IN THE MATERIALS OR INSTALLATION WORK SHALL BE CORRECTED IMMEDIATELY.
14. FLUORESCENT LUMINAIRE'S BALLASTS MAY CONTAIN PCB'S. BALLASTS SHALL BE REMOVED FROM THE LUMINARIES, BAGGED, BOXED AND TURNED OVER TO THE GOVERNMENT FOR DISPOSAL.
15. FLUORESCENT LAMPS SHALL BE MANAGED AS A HAZARDOUS WASTE IN ACCORDANCE WITH THE CALIFORNIA DEPARTMENT OF TOXIC SUBSTANCES CONTROL POLICY ON DISPOSAL OF FLUORESCENT LAMPS AT A FACILITY AUTHORIZED TO PERFORM SUCH OPERATIONS BY THE STATE OF CALIFORNIA.
16. IN ADDITION TO THE REQUIRED LIGHTING FIXTURE SUPPORT WIRES, LIGHTING FIXTURES IN SUSPENDED T-BAR CEILINGS SHALL BE SEISMICALLY BRACED WITH A MINIMUM OF TWO #12 WIRES AT ALTERNATE CORNERS OF THE LIGHTING FIXTURE HOUSING AT AN ANGLE OF 45 DEGREES OR LESS FROM HORIZONTAL AND SECURED TO A STRUCTURAL MEMBER OF THE BUILDING. SEE ARCHITECTURAL DRAWINGS FOR BRACING DETAILS.
17. ALL SURFACES CONTAIN LEAD BASED PAINT. THE NASA LEAD MANAGEMENT PLAN AND ALL FEDERAL, STATE, AND LOCAL REGULATIONS PERTAINING TO THE HANDLING, DISTURBANCE, STORAGE, AND DISPOSAL OF LEAD MUST BE ADHERED TO.
18. CONCEALED EMT CONDUITS THAT ARE INSTALLED IN CEILING WHICH IS CONSIDERED AS PLENUM SPACE SHALL HAVE COMPRESSION TYPE CONNECTIONS. WIRING SHALL BE RATED SUITABLE FOR THE OCCUPANCY TYPE PER CEC.
19. CONTRACTOR TO ENSURE CONTINUITY OF ALL (E) CIRCUITS AFFECTED BY NEW INSTALLATION.

ELECTRICAL ABBREVIATIONS

A	AMPERE
AC	AIR CONDITIONER
AF	AMPERE FRAME OR FUSE RATING
AFF	ABOVE FINISHED FLOOR
ARF	ABOVE RAISED FLOOR
AWG	AMERICAN WIRE GAUGE
C	CONDUIT
CB	CIRCUIT BREAKER
CKT, CKTS	CIRCUIT/S
CLG.	CEILING
CO	CONDUIT ONLY
CORR	CORRIDOR
COTR	CONTRACTING OFFICER TECHNICAL REPRESENTATIVE
DET	DETAIL
DWG	DRAWING
(ER)	EXISTING TO BE RELOCATED
ELEC	ELECTRIC(AL)
EMT	ELECTRICAL METALLIC TUBING
FACP	FIRE ALARM CONTROL PANEL
FDS	FUSED DISCONNECT SWITCH
FMC	FLEXIBLE METAL CONDUIT
G; GND	GROUND(ED)
GFE	GOVERNMENT FURNISHED EQUIPMENT
GFI	GROUND FAULT INTERRUPTER
GSE	GROUND SUPPORT EQUIPMENT
HP	HORSE POWER
KCMIL	THOUSAND CIRCULAR MILS
KVA	KILOVOLT AMPERE
JB	JUNCTION BOX
MCCB	MOLDED CASE CIRCUIT BREAKER
mm	MILLIMETERS
N	NEW
NEC	NATIONAL ELECTRICAL CODE
NEMA	NATIONAL ELECTRICAL MANUFACTURER'S ASSOCIATION
NIC	NOT IN CONTRACT
NTS	NOT TO SCALE
P	POLE
PB	PULLBOX
PBS	PUSHBUTTON STATION
PCB	POLY CHLORINATED BIPHENYL
PH	PHASE
PNL	PANEL
(R)	RELOCATED
RECP	RECEPTACLE
RGS	RIGID GALVANIZED STEEL
RM	ROOM
RMC	RIGID METAL CONDUIT
SPEC	SPECIFICATIONS
TEL	TELEPHONE
TYP	TYPICAL
UON	UNLESS OTHERWISE NOTED
UPS	UNINTERRUPTIBLE POWER SUPPLY
V	VOLT
W	WIRE
W/	WITH
W/O	WITHOUT
WP	WEATHER PROOF
XFMR	TRANSFORMER

ABBREVIATIONS & ACRONYMS

ORGANIZATIONS AND ASSOCIATIONS

ADA	AMERICAL WITH DISABILITY ACT
ANSI	AMERICAN NATIONAL STANDARDS INSTITUTE
ASHRAE	AMERICAN SOCIETY OF HEAT, REFRIGERATION AND AIR CONDITIONING ENGINEERS
ASME	THE AMERICAN SOCIETY OF MECHANICAL ENGINEERS
ASTM	THE AMERICAN SOCIETY FOR TESTING AND MATERIALS
ATSC	ADVANCE TELEVISION SYSTEM COMMITTEE
BIC	BUILDING INDUSTRY CONSULTANTS
BICSI	BUILDING INDUSTRY CONSULTANTS INSTITUTE
CFR	CODE OF FEDERAL REGULATION
CSI	THE CONSTRUCTION SPECIFICATIONS INSTITUTE
DOT	DEPARTMENT OF TRANSPORTATION
EIA	ELECTRONIC INDUSTRIES ASSOCIATION
EPA	ENVIRONMENTAL PROTECTION AGENCY (CLEAN WATER ACT.)
FCC	FEDERAL COMMUNICATION COMMISSION
IEEE	INTERMEDIATE INSTITUTE OF ELECTRICAL AND ELECTRONICS ENGINEERS
ISO	INTERNATIONAL ORGANIZATION FOR STANDARDIZATION
NASA	NATIONAL AERONAUTICS & SPACE ADMINISTRATION
NCS	NATIONAL COMMUNICATION SYSTEM
NCTA	NATIONAL CABLE & TELECOMMUNICATIONS ASSOCIATION
NEC	NATIONAL ELECTRICAL CODE
NEMA	NATIONAL ELECTRICAL MANUFACTURES ASSOCIATION
NESC	NATIONAL ELECTRICAL SAFETY CODE
NFPA	NATIONAL FIRE PROTECTION ASSOCIATION
NIST	NATIONAL INSTITUTE OF STANDARDS AND TECHNOLOGY
OSHA	OCCUPATIONAL SAFETY AND HEALTH ADMINISTRATION
PUC	PUBLIC UTILITY COMMISSION
REA	RURAL ELECTRIFICATION ADMINISTRATION
RUS	RURAL UTILITY SERVICE
TIA	TELECOMMUNICATION INDUSTRY ASSOCIATION
TSB	TELECOMMUNICATION SYSTEMS BULLETIN
UBC	UNIFORM BUILDING CODE
UL	UNDERWRITERS LABORATORIES INC.

DRAWING CONVENTIONS

SYMBOL	DESCRIPTION
———	EXISTING TO REMAIN
	EXISTING TO BE DEMOLISHED
(E)	EXISTING
(ER)	EXISTING TO BE RELOCATED
(R)	RELOCATED
//////	EXISTING TO BE REMOVED

LIGHTING SYMBOLS

- 6a — FLUORESCENT FIXTURE, 'a' INDICATES SWITCHING CONFIGURATION. '6' INDICATES NUMBER OF CIRCUIT BREAKER ON ELECTRICAL PANEL
- 6a — FLUORESCENT LIGHTING FIXTURE CONNECTED TO EMERGENCY POWER 'a' INDICATES SWITCHING CONFIGURATION. '6' INDICATES NUMBER OF CIRCUIT BREAKER ON ELECTRICAL PANEL
- FLUORESCENT LIGHTING FIXTURE WITH EMERGENCY BATTERY PACK
- $a — SINGLE POLE LIGHT SWITCH; LOWER CASE LETTER DESIGNATES SWITCHING CONFIGURATION
- WALL MOUNTED EXIT SIGN, SINGLE FACE, ARROW INDICATES DIRECTION
- CEILING MOUNTED EXIT SIGN, DOUBLE FACE, ARROWS INDICATE DIRECTION
- EMERGENCY LIGHTING FIXTURE WITH BATTERY PACK, WALL MOUNTED.
- EXTERIOR LIGHT FIXTURE, PENDANT MOUNTED.
- ARM MOUNTED SECURITY LIGHT.

RACEWAY & GROUNDING SYSTEM SYMBOLS

- FLEXIBLE CONDUIT WITH 2 #12, 1 #12 G, UON.
- BRANCH CIRCUIT WIRING IN CONDUIT – CONCEALED, 3/4" CONDUIT WITH 2 #12 & 1 #12G, UON
- B–1 — DENOTES HOMERUN TO PANEL B, CIRCUIT 1, 3/4" C WITH 2 #12 & 1 #12 G, UON
- J — JUNCTION OR OUTLET BOX, WALL MOUNTED, 4X4 (TYP)
- J — JUNCTION BOX, CEILING OR FLOOR MOUNTED, 4X4 (TYP)
- S — SURFACE RACEWAY OR MULTI-OUTLET ASSEMBLY
- CONDUIT TURNS UP
- CONDUIT TURNS DOWN

POWER DISTRIBUTION SYMBOLS

- PANELBOARD
- B–1 — DUPLEX RECEPTACLE, WALL MOUNTED 125V, 20A, NEMA 5–20R, SUBSCRIPT DENOTES PANEL B CIRCUIT #1.
- B–1 — FOURPLEX RECEPTACLE, WALL MOUNTED 125V, 20A, NEMA 5–20R, SUBSCRIPT DENOTES PANEL B CIRCUIT #1.
- D — DUPLEX RECEPTACLE, WALL MOUNTED 125V, 20A, NEMA 5–20R, ON DEDICATED CIRCUIT
- 125V, 30A NEMA 5–30R RECEPTACLE.
- DISCONNECT SWITCH
- C — ENCLOSED CIRCUIT BREAKER, WALL MOUNTED
- DRY TYPE TRANSFORMER, FLOOR MOUNTED

REGISTERED PROFESSIONAL ENGINEER — JAMES T. McCUSKER — No. E013209 — Exp. 6-30-11 — ELECTRICAL — STATE OF CALIFORNIA

FIRE ALARM SYMBOLS

- X–X — SMOKE DETECTOR CEILING MOUNTED. SUBSCRIPT X–X DENOTES CIRCUIT OR ADDRESS NUMBER.
- N–101 15cd — AUDIO/VISUAL DEVICE WITH ID NUMBER, WALL MOUNTED WITH ITS ENTIRE LENS NOT LESS THAN 80" AND NOT GREATER THAN 96" A.F.F. PER NFPA 72. STROBE CANDELA RATING AS SHOWN.
- FACP — FIRE ALARM CONTROL PANEL
- FSA — FIRE SYSTEM ANNUNCIATOR

GENERAL SYMBOLS

- 1 — KEY NOTE
- DETAIL REFERENCE: 1 / A1 A2 — DETAIL NUMBER; SHEET WHERE DETAIL IS SHOWN; SHEET FROM WHICH DETAIL IS REFERENCED
- SECTION REFERENCE: A / A1 A2 — SECTION IDENTIFICATION; SHEET WHERE SECTION IS DRAWN; SHEET FROM WHICH SECTION IS REFERENCED
- PHOTOGRAPHIC VIEWPOINT OR ELEVATION REFERENCE: 1 / A1 A5 — PHOTOGRAPH OR ELEVATION IDENTIFICATION; SHEET WHERE PHOTOGRAPH OR ELEVATION IS SHOWN; SHEET FROM WHICH PHOTOGRAPH OR ELEVATION IS REFERENCED

SYMBOLS AND ABBREVIATIONS LISTED ARE FOR GENERAL USE. DISREGARD THOSE WHICH ARE NOT USED ON THE DRAWINGS.

Approved for Construction
Moffett Field Permit Board
Chief Building Official
Permit No. 10P003

ZONE	LETTER	DESCRIPTION	DRAWN	DATE	APPRVD

REVISIONS

DRAWN H.FORTEZA	DATE 4/12/10	
DESIGNED H.FORTEZA	DATE 4/12/10	
CHECKED J. McCUSKER	DATE 4-12-10	
PROJMGR M.CALLAHAN	DATE 4/12/10	
REQUESTER J.BALDOVINO	DATE 04/12/2010	
USER J.BALBONI	DATE 4/12/10	
SAFETY	DATE	
SUPERVISOR S.FRANKEL	DATE 4-14-10	
	DATE	

Ames Research Center
Moffett Field, California

N234A SVS DEAERATOR/FEEDWATER TANK REPLACEMENT
ELECTRICAL

ELECTRICAL NOTES, SYMBOLS AND ABBREVIATIONS

SIZE	CAGE CODE		REV
D	25307	A 234A-1000-E1	
SCALE NTS		INDEX	SHEET OF

FILE NAME: 234A-E01.DWG 04-09-2010

DWG: R:\234A\60046725.0001 (K60056) Feed Water Deaerator\500_CAD\FEEDWATER\E\Sheet\234A-E01.dwg Version: 17.1s (LMS Tech) User: jjiho
DATE: Apr 12, 2010 – 9:00:55 am

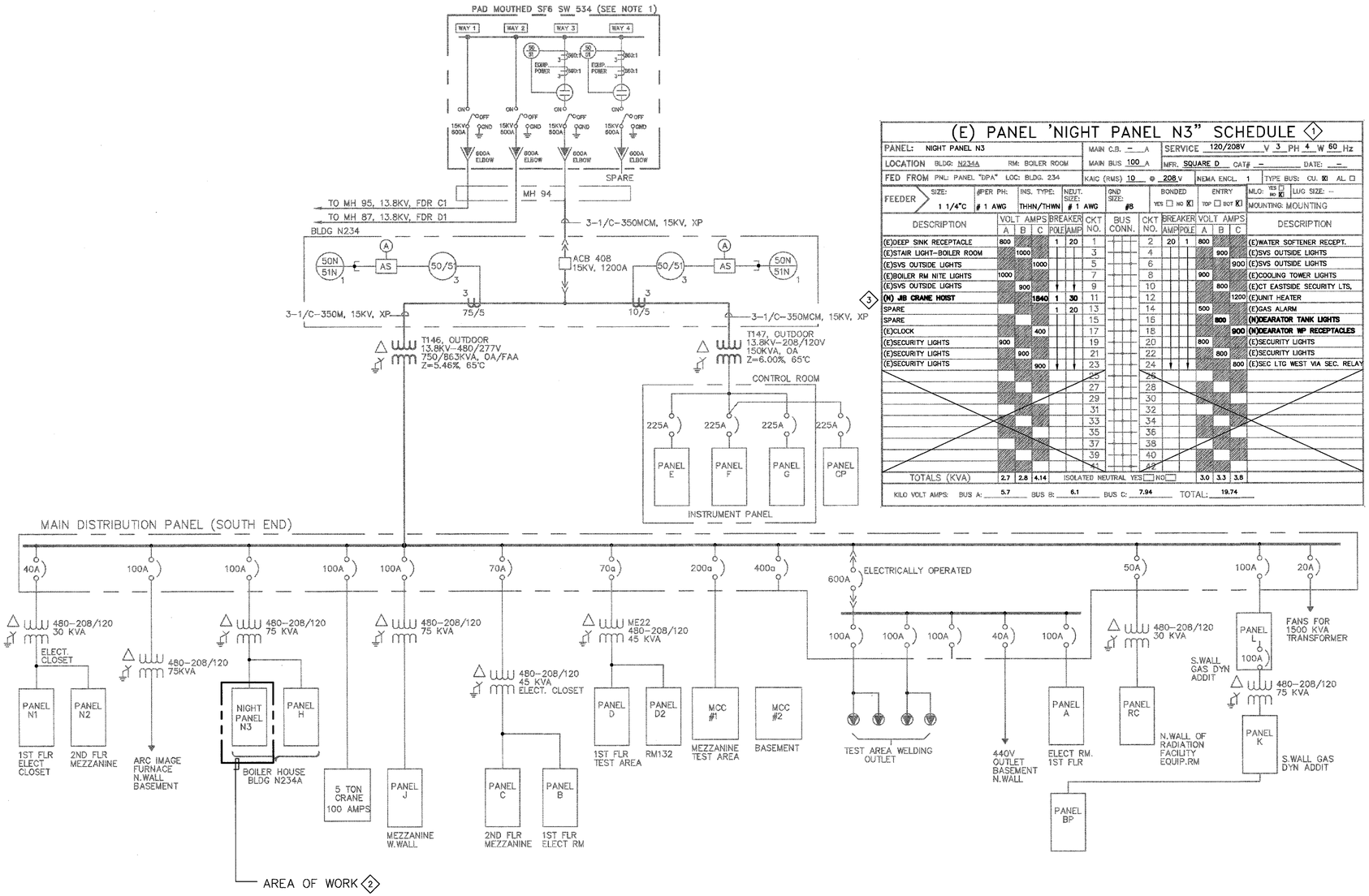

(E) PANEL 'NIGHT PANEL N3" SCHEDULE 1

PANEL: NIGHT PANEL N3 | MAIN C.B. – A | SERVICE 120/208V V 3 PH 4 W 60 Hz

LOCATION BLDG: N234A RM: BOILER ROOM | MAIN BUS 100 A | MFR. SQUARE D CAT# – DATE: –

FED FROM PNL: PANEL "DPA" LOC: BLDG. 234 | KAIC (RMS) 10 @ 208 V | NEMA ENCL. 1 | TYPE BUS: CU. ☒ AL. ☐

FEEDER SIZE: 1 1/4"C | #PER PH: # 1 AWG | INS. TYPE: THHN/THWN | NEUT. SIZE: # 1 AWG | GND SIZE: #8 | BONDED YES ☐ NO ☒ | ENTRY TOP ☐ BOT ☒ | MLO: YES ☐ NO ☒ | LUG SIZE: -- | MOUNTING: MOUNTING

DESCRIPTION	VOLT AMPS A	B	C	BREAKER POLE	AMP	CKT NO.	BUS CONN.	CKT NO.	BREAKER AMP	POLE	VOLT AMPS A	B	C	DESCRIPTION
(E)DEEP SINK RECEPTACLE	800			1	20	1		2	20	1	800			(E)WATER SOFTENER RECEPT.
(E)STAIR LIGHT-BOILER ROOM		1000				3		4				900		(E)SVS OUTSIDE LIGHTS
(E)SVS OUTSIDE LIGHTS			1000			5		6					900	(E)SVS OUTSIDE LIGHTS
(E)BOILER RM NITE LIGHTS	1000					7		8			900			(E)COOLING TOWER LIGHTS
(E)SVS OUTSIDE LIGHTS		900				9		10				800		(E)CT EASTSIDE SECURITY LTS.
3 **(N) JIB CRANE HOIST**			**1540**	**1**	**30**	11		12					1200	(E)UNIT HEATER
SPARE				1	20	13		14			500			(E)GAS ALARM
SPARE						15		16				**800**		**(N)DEARATOR TANK LIGHTS**
(E)CLOCK			400			17		18					**900**	**(N)DEARATOR WP RECEPTACLES**
(E)SECURITY LIGHTS	900					19		20			800			(E)SECURITY LIGHTS
(E)SECURITY LIGHTS		900				21		22				800		(E)SECURITY LIGHTS
(E)SECURITY LIGHTS			900			23		24					800	(E)SEC LTG WEST VIA SEC. RELAY
						25		26						
						27		28						
						29		30						
						31		32						
						33		34						
						35		36						
						37		38						
						39		40						
						41		42						
TOTALS (KVA)	2.7	2.8	4.14								3.0	3.3	3.8	

ISOLATED NEUTRAL YES ☐ NO ☐

KILO VOLT AMPS: BUS A: 5.7 BUS B: 6.1 BUS C: 7.94 TOTAL: 19.74

SHEET NOTES

1. SEE SHEET E1 FOR SYMBOLS, ABBREVIATIONS AND GENERAL NOTES.
2. CONTRACTOR SHALL FIELD VERIFY ALL MEASUREMENTS AT THE SITE AND SHALL BE RESPONSIBLE FOR THEIR ACCURACY PRIOR TO STARTING ANY WORK OR ORDERING ANY MATERIAL.
3. ALL EXISTING CONDUIT & CONDUCTORS AFFECTED SHALL BE DISCONNECTED FROM (E) EQUIPMENT AND RECONNECTED TO THE (N) EQUIPMENT. CONTRACTOR SHALL DETERMINE IN FIELD AND SHALL PROVIDE PULL BOXES AND RELOCATE, EXTEND OR REPLACE (E) CONDUIT AND CONDUCTORS (MATCH EXISTING) TO COMPLETE CONNECTIONS TO NEW AND EXISTING EQUIPMENT.

KEY NOTES

1. ELECTRICAL CONTRACTOR SHALL UPDATE PANEL DIRECTORY AND RELABEL CIRCUIT BREAKERS IN ACCORDANCE WITH PROVIDED PANEL SCHEDULE.
2. REFER THIS DRAWING FOR PANEL SCHEDULE.
3. PROVIDE NEW 30A, 1-POLE CIRCUIT BREAKER TO MATCH EXISTING MANUFACTURER'S TYPE AND RATING IN PANEL "N3" IN AVAILABLE SPACE 11 FOR JIB CRANE HOIST.

Approved for Construction
Moffett Field Permit Board
Chief Building Official
Permit No. 10P003

ZONE	LETTER	DESCRIPTION	DRAWN	DATE	APPRVD

REVISIONS

DRAWN H. FORTEZA	DATE 4/12/10	**Ames Research Center** Moffett Field, California
DESIGNED H.FORTEZA	DATE 4/12/10	
CHECKED J.McCUSKER	DATE 4-12-10	N234A SVS DEAERATOR/FEEDWATER TANK REPLACEMENT
PROJMGR M.CALLAHAN	DATE 4/12/10	ELECTRICAL
REQUESTER J.BALDOVINO	DATE 04/12/2010	SINGLE LINE DIAGRAM
USER J.BALBONI	DATE 4/12/10	
SAFETY	DATE	
SUPERVISOR S.FRANKEL	DATE 4-14-10	

REGISTERED PROFESSIONAL ENGINEER JAMES T. McCUSKER No. E019399 Exp. 6-30-11 ELECTRICAL STATE OF CALIFORNIA

SIZE	CAGE CODE		REV
D	25307	A 234A-1000-E2	
SCALE		INDEX	SHEET OF

FILE NAME: 234A-0810-E2 04-12-2010

DWG: R:\234A\60046725.0001 (K80056) Feed Water Deaerator\500_CAD\FEEDWATER\E\Sheet\234A-E02.dwg Version: 17.1s (LMS Tech) User: jlho
DATE: Apr 12, 2010 - 9:00:57 am

DWG NO.	SH.	REV
A234A-1000-E3		

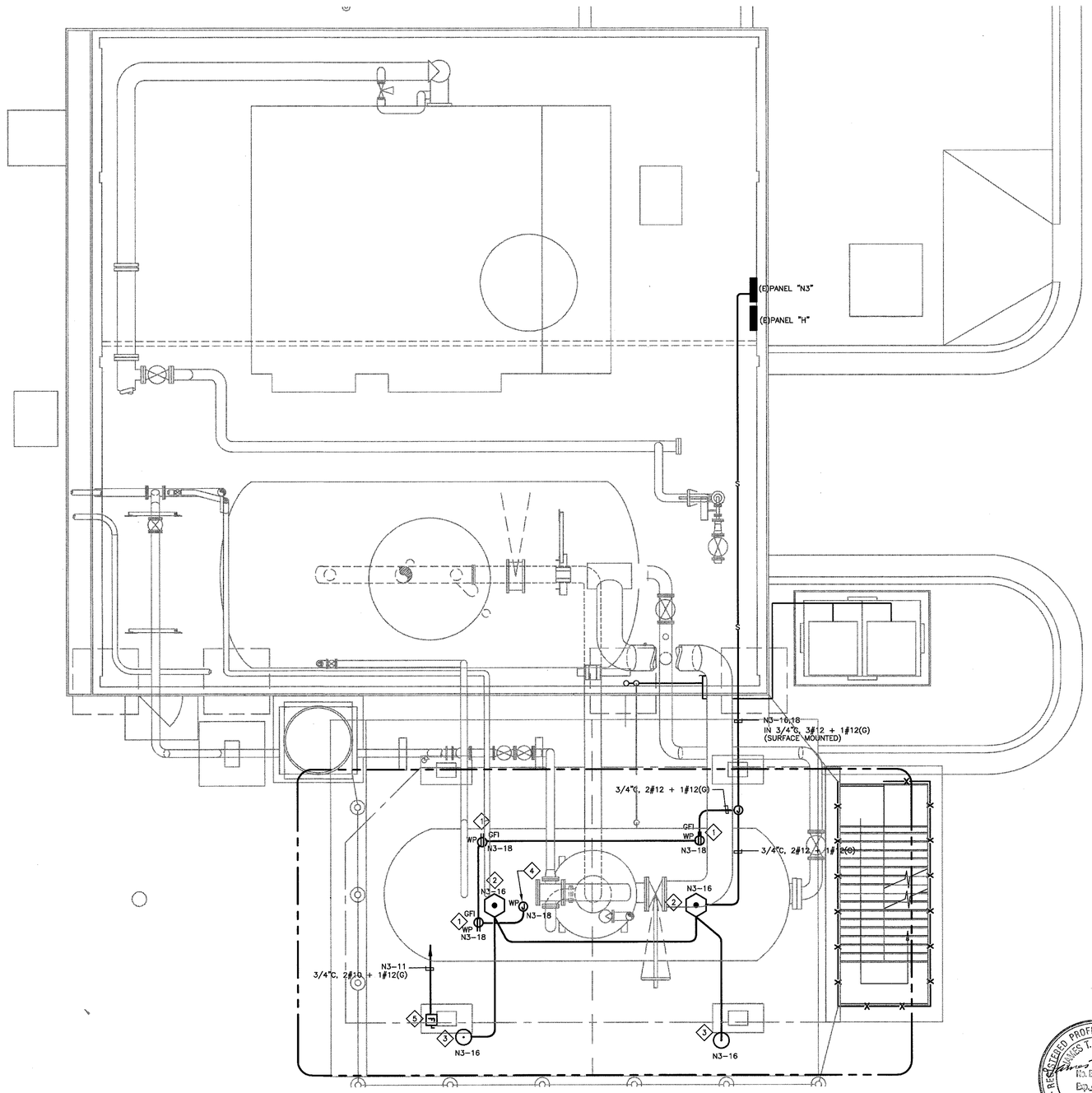

1 SITE PLAN
SCALE: 1/4" = 1'-0"

N

1/4"=1' 0 2 4 8 12

SHEET NOTES

1. SEE DWG E1 FOR SYMBOLS, ABBREVIATIONS AND ELECTRICAL GENERAL NOTES.
2. DARK OR HEAVY LINES INDICATE NEW MATERIAL/EQUIPMENT TO BE PROVIDED. LIGHT LINES INDICATE EXISTING CONDITION, UON.
3. CONTRACTOR SHALL FIELD VERIFY ALL MEASUREMENTS AT THE SITE AND SHALL BE RESPONSIBLE FOR THEIR ACCURACY PRIOR TO STARTING ANY WORK OR ORDERING ANY MATERIAL.

KEY NOTES

1. NEW NEMA 3R, WP, GFCI DUPLEX RECEPTACLE.
2. EXTERIOR LIGHT FIXTURE, 55W INDUCTION LIGHTING SYSTEM, DIE-CAST ALUMINUM HOUSING WITH CONICAL REFLECTOR, INJECTION MOLDED POLYCARBONATE REFRACTOR, CLEAR PRISMATIC LENS, GASKETED WEATHERPROOF WITH PHOTOCELL. LITHONIA CAT. # VR4CV-55IL 120-PE-LPI. PROVIDE ADEQUATE UNISTRUT SUPPORT PER SEISMIC REQUIREMENT FOR MOUNTING LIGHTING FIXTURES. FIELD VERIFY EXACT LOCATION PRIOR TO ROUGH-IN.
3. ARM MOUNTED SECURITY LIGHT FIXTURE, 100MV LAMP, RUGGED DIE-CAST ALUMINUM HEAD WITH OPEN-BOTTOM REFRACTOR WITH PHOTOCELL . LITHONIA CAT. # TDB-100MV-120 SERIES. PROVIDE ADEQUATE UNISTRUT SUPPORT PER SEISMIC REQUIREMENT FOR MOUNTING LIGHTING FIXTURES. MOUNTING HEIGHT SHALL BE 8 FT. FROM PLATFORM SURFACE. FIELD VERIFY EXACT LOCATION PRIOR TO ROUGH-IN.
4. 120V POWER FOR SHUT OFF VALVE.
5. PROVIDE NEW DISCONNECT SWITCH, 30A, 2-POLE, FUSIBLE, NEMA-3R ENCLOSURE, SQUARE D OR APPROVED EQUAL FOR JIB CRANE HOIST.

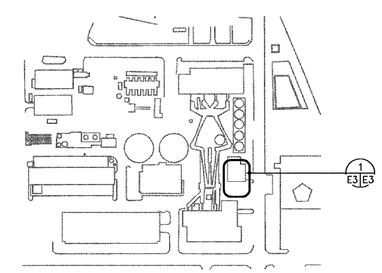

KEY PLAN

N

Approved for Construction
Moffett Field Permit Board

Chief Building Official
Permit No. 10P003

ZONE	LETTER	DESCRIPTION	DRAWN	DATE	APPRVD
		REVISIONS			

REGISTERED PROFESSIONAL ENGINEER
JAMES T. McCUSKER
No. E013069
Exp. 6-30-11
ELECTRICAL
STATE OF CALIFORNIA

		DATE
DRAWN	H.FORTEZA	4/12/10
DESIGNED	H.FORTEZA	4/12/10
CHECKED	J. McCUSKER	4.12.10
PROJMGR	M.CALLAHAN	4/12/10
REQUESTER	J.BALDOVINO	04/14/2010
USER	J.BALBONI	4/12/10
SAFETY		
SUPERVISOR	S.FRANKEL	4.14.10

Ames Research Center
Moffett Field, California

N234A SVS DEAERATOR/FEEDWATER TANK REPLACEMENT
ELECTRICAL

SITE PLAN

SIZE	CAGE CODE	REV
D	25307	A 234A-1000-E3
SCALE AS NOTED	INDEX	SHEET OF

FILE NAME: 234A-E03 04-09-2010

DWG: R:\234A\60046725.0001 (480056) Feed Water Deaerator\300_CAD\FEEDWATER\E\Sheet\234A-E03.dwg Version: 17.1s (LMS Tech) User: jiho
DATE: Apr 12, 2010 - 9:01:22 am

DWG NO. A234A-1000-E4 | SH. | REV

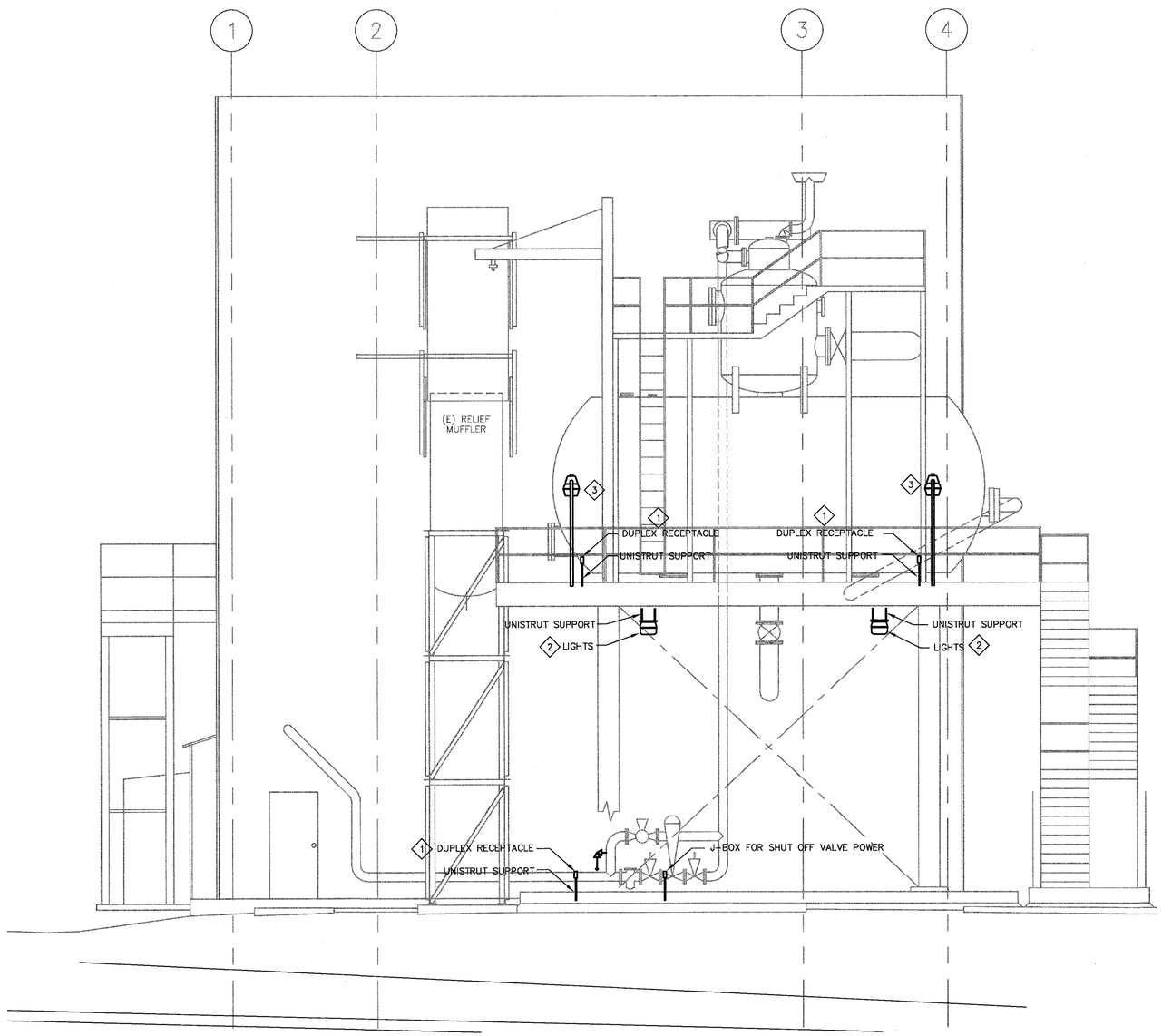

1 E4 E4 SOUTH ELEVATION POWER AND LIGHTING PLAN

SCALE: 1/4" = 1'-0"

N

1/4"=1' 0 2 4 8 12

SHEET NOTES

1. SEE DWG E1 FOR SYMBOLS, ABBREVIATIONS AND ELECTRICAL GENERAL NOTES.
2. ALL ELECTRICAL DEVICES LOCATED OUTSIDE THE BUILDING SHALL HAVE WEATHERPROOF TYPE ENCLOSURE.

KEY NOTES

1. NEW NEMA 3R, WP, GFCI DUPLEX RECEPTACLE MOUNTED 12" ABOVE PLATFORM SURFACE. FIELD VERIFY EXACT LOCATION PRIOR TO ROUGH-IN.
2. EXTERIOR LIGHT FIXTURE, 55W INDUCTION LIGHTING SYSTEM, DIE-CAST ALUMINUM HOUSING WITH CONICAL REFLECTOR, INJECTION MOLDED POLYCARBONATE REFRACTOR, CLEAR PRISMATIC LENS, GASKETED WEATHERPROOF WITH PHOTOCELL. LITHONIA CAT. # VR4CV-55IL 120-PE-LPI. PROVIDE ADEQUATE UNISTRUT SUPPORT PER SEISMIC REQUIREMENT FOR MOUNTING LIGHTING FIXTURES. FIELD VERIFY EXACT LOCATION PRIOR TO ROUGH-IN.
3. ARM MOUNTED SECURITY LIGHT FIXTURE, 100MV LAMP, RUGGED DIE-CAST ALUMINUM HEAD WITH OPEN-BOTTOM REFRACTOR WITH PHOTOCELL . LITHONIA CAT. # TDB-100MV-120 SERIES. PROVIDE ADEQUATE UNISTRUT SUPPORT PER SEISMIC REQUIREMENT FOR MOUNTING LIGHTING FIXTURES. MOUNTING HEIGHT SHALL BE 8 FT. FROM PLATFORM SURFACE. FIELD VERIFY EXACT LOCATION PRIOR TO ROUGH-IN.

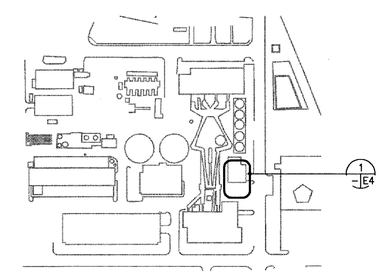

KEY PLAN

N

Approved for Construction
Moffett Field Permit Board

Chief Building Official

Permit No. 10P003

ZONE	LETTER	DESCRIPTION	DRAWN	DATE	APPRVD

REVISIONS

REGISTERED PROFESSIONAL ENGINEER JAMES T. McCUSKER No. E016999 Exp. 6-30-11 ELECTRICAL STATE OF CALIFORNIA

		DATE
DRAWN	H.FORTEZA	4/12/10
DESIGNED	H.FORTEZA	4/12/10
CHECKED	J. McCUSKER	4-12-10
PROJMGR	M.CALLAHAN	4/12/10
REQUESTER	J.BALDOVINO	04/19/2010
USER	J.BALBONI	4/12/10
SAFETY		
SUPERVISOR	S.FRANKEL	4/14/10

Ames Research Center
Moffett Field, California

N234A SVS DEAERATOR/FEEDWATER TANK REPLACEMENT
ELECTRICAL

SOUTH ELEVATION POWER AND LIGHTING PLAN

SIZE	CAGE CODE	REV
D	25307	A 234A-1000-E4
SCALE AS NOTED	INDEX	SHEET OF

FILE NAME: 234A-E04 04-09-2010

DWG: R:\234A\60046725.0001 (KB0056) Feed Water Deaerator\500_CAD\FEEDWATER\E\Sheet\234A-E04.dwg Version: 17.1s (LMS Tech) User: jlho
DATE: Apr 12, 2010 - 9:01:48 am

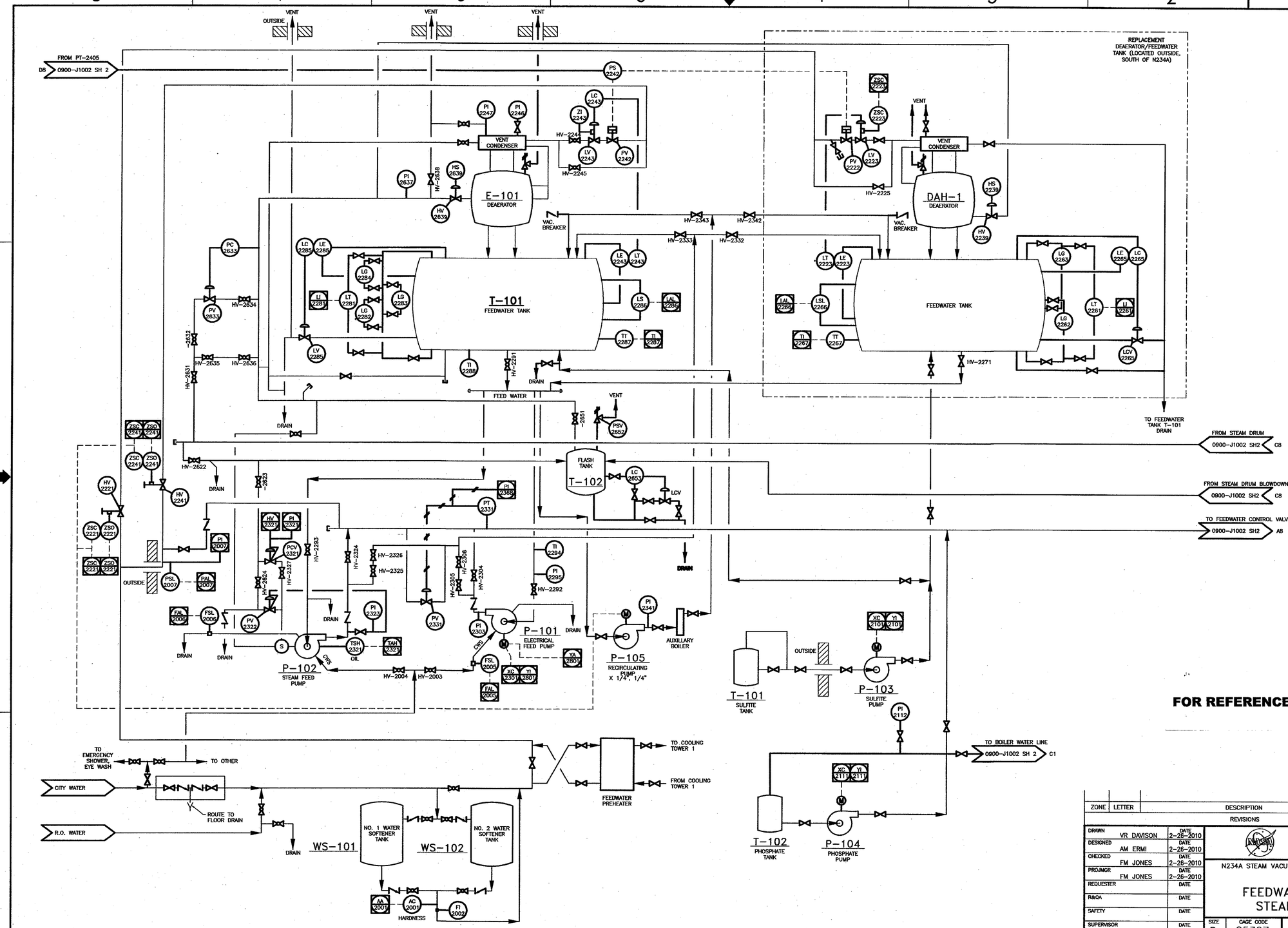

ZONE	LETTER	DESCRIPTION	DRAWN	DATE	APPRVD
		REVISIONS			

DRAWN	VR DAVISON	DATE 2-26-2010
DESIGNED	AM ERMI	DATE 2-26-2010
CHECKED	FM JONES	DATE 2-26-2010
PROJMGR	FM JONES	DATE 2-26-2010
REQUESTER		DATE
R&QA		DATE
SAFETY		DATE
SUPERVISOR		DATE
		DATE

Ames Research Center
Moffett Field, California

N234A STEAM VACUUM SYSTEM (SVS) VACUUM EJECTOR AND BOILER CONTROL

FEEDWATER, BOILER AND STEAM SYSTEM P&ID

SIZE	CAGE CODE		REV
D	25307	A 234A-0900-J1002	0
SCALE		INDEX	SHEET 1 OF 2

FILE NAME:

DWG: P:\NASA Ames\Arc Jet System Upgrade\Sheets\N234A-0900-J1002_Sht1.dwg Version: 17.2s (LMS Tech) User: thomsac
DATE: Mar 11, 2010 - 6:32:32 pm