GPM Flight Fittings Statement of Work

In support of Global Precipitation Measurement (GPM) Mission

**Summary**

This activity is required to support the flight build of the propulsion subsystem for the GPM spacecraft. This procurement involves the delivery of a total of 135 stainless steel fittings per NASA-supplied drawings to the Goddard Space Flight Center (GSFC) in Greenbelt, MD. At GSFC, these fittings will be welded to 304L flight tubing and propulsion components using an orbital welding machine. The fittings must have characteristics as detailed in the supplied drawings, with the quantities and delivery dates listed in this statement of work.

**Requirements**

| Part Number | Description | Drawing Reference | Material | Quantity | Delivery Date |
|---|---|---|---|---|---|
| 2129305-1 | 1/4" tee fitting | 2129305 | 304L or 316L | 15 | July 30, 2010 |
| 2129305-3 | 1/4" tee fitting, long legged | 2129305 | 304L or 316L | 10 | July 30, 2010 |
| 2129305-5 | 3/8" tee fitting | 2129305 | 304L or 316L | 15 | August 20, 2010 |
| 2129305-7 | 3/8" tee fitting, long legged | 2129305 | 304L or 316L | 10 | August 20, 2010 |
| 2129306-1 | 1/4" elbow fitting | 2129306 | 304L or 316L | 30 | July 30, 2010 |
| 2129306-3 | 3/8" elbow fitting | 2129306 | 304L or 316L | 10 | August 20, 2010 |
| 2129306-5 | 3/8" elbow fitting, long legged | 2129306 | 304L or 316L | 10 | August 20, 2010 |
| 2129306-7 | 1/4" elbow fitting, long legged | 2129306 | 304L or 316L | 10 | July 30, 2010 |
| 2129307 | 3/8" to 1/4" reducer fitting | 2129307 | 304L or 316L | 10 | August 20, 2010 |
| 2129312 | Inner diameter transition fitting | 2129312 | 304L | 15 | August 20, 2010 |

| REV | ZONE | REVISION DESCRIPTION | DATE | APPROVED |
|---|---|---|---|---|
| | | Initial Release | [illegible] | [illegible] |
| A | | ADDED 316L MATERIAL AS AN OPTION | [illegible] | [illegible] |

## NOTES UNLESS OTHERWISE SPECIFIED

1. MATERIAL CRES TYPE 304L OR 316L, BAR OR PLATE, ANNEALED CONDITION IN ACCORDANCE WITH QQ-S-763 OR ASTM A 666. THE PARTS WILL BE MADE FROM RAW STOCK (PLATE OR BAR) PRODUCED BY THE VACUUM ARC REMELT (VAR) METHOD

2. PLATE THICKNESS OR BAR CROSS SECTION DIMENSIONS ARE NOT TO EXCEED TWO INCHES.

3. DISCARD ONE THICKNESS OF PLATE EDGE MATERIAL (PARALLEL TO THE ROLLING DIRECTION) TO PREVENT INCORPORATION OF EDGE DEFECTS. THIS DISCARDED MATERIAL SHALL BE TAGGED AS SUCH AND RETURNED TO GSFC

4. THE VENDOR SHALL SUPPLY STOCK COUPONS TO GSFC. ONE INCH LENGTH FROM EACH END OF BAR OR PLATE. IF THE SAMPLE IS FROM PLATE, ONE INCH ACROSS THE ENTIRE WIDTH SHALL BE PROVIDED. GSFC SHALL PERFORM THE FOLLOWING METALLOGRAPHIC EXAMINATIONS

   A. ASTM E 45 METHOD D

   B. ASTM A-262 METHOD E

   C. CHEMICAL COMPOSITION INCLUDING CARBON CONTENT

5. FINISH OF THE INSIDE PASSAGES AND OUTSIDE OF THE TUBE STUBS SHALL BE 32 RA OR BETTER

6. THE INTERIOR PASSAGES OF THE FITTING SHALL BE ELECTROPOLISHED. THE VENDOR MAY, WITH PERMISSION FROM GSFC, SUBSTITUTE PASSIVATION FOR ELECTROPOLISHING. EACH FITTING WOULD BE PASSIVATED IN ACCORDANCE WITH ASTM A 380

7. NO BURRS, GOUGES, OR SCRATCHES ON ANY SURFACE

8. LEAVE AS SHARP EDGE, HOWEVER, DEBURR AS NEEDED WITH R .002 MAX

9. MARK EACH PART USING ELECTROCHEMICAL ETCHING IN ACCORDANCE WITH MIL-STD-792 TYPE II ON THE TUBE BODY. INCLUDE THE DRAWING NUMBER AND DASH NUMBER. THE MAXIMUM DEPTH OF THE MARKING MAY NOT EXCEED 0.002". LASER ENGRAVING (TYPE VII) MAY BE USED WITH THE PERMISSION OF GSFC BUT MAY NOT EXCEED THE MAXIMUM DEPTH OF 0.002".

10. THE VENDOR SHALL DELIVER THE PARTS VISUALLY CLEAN AND INDIVIDUALLY BAGGED IN RESEALABLE PACKAGES. PRECISION CLEANING, CLEANLINESS VERIFICATION, AND BAGGING WILL BE ACCOMPLISHED BY GSFC

11. EACH INDIVIDUAL PART WILL BE VISUALLY INSPECTED BY GSFC PRIOR TO PRECISION CLEANING. INSPECT WITH A STEREO MICROSCOPE AT 20X MAGNIFICATION OR BETTER. ALL EXTERIOR SURFACES WILL BE INSPECTED. INTERIOR SURFACES WILL BE INSPECTED WITHIN THE LIMITS OF THE EQUIPMENT (ONE ID MINIMUM DESIRED). ALL VOIDS, CRACKS, AND LAMINATIONS WILL BE REPORTED

12. PRECISION CLEANING, CLEANLINESS VERIFICATION, AND BAGGING WILL BE ACCOMPLISHED BY GSFC IN ACCORDANCE WITH 597-WI-8700.2.1

This GPM Drawing has been RELEASED by the GM Office by LAL on 04/12/2018. All signatories listed for this document have their electronic approvals on file in the MIS Data Base and have been audited for accuracy by the GPM GM Office.

| ITEM NO | REQD | REQD | REQD | PART NO | DESCRIPTION | MATERIAL | MATERIAL SPEC & NO |
|---|---|---|---|---|---|---|---|
| 1 | AR | AR | AR | — | FITTING, TEE, TUBE WELD | CRES | SEE NOTE 1 |
| | | | | SEE TABLE I | | | |

LIST OF MATERIAL

UNLESS OTHERWISE SPECIFIED DIMENSIONS ARE IN INCHES
TOLERANCES: .XX ±0.01 .XXX ±0.005 ANG. ±0.5 FRACTIONS ±1/16
REMOVE ALL BURRS AND SHARP EDGES 0.010 OR GREATER MAX
FLIGHT HARDWARE / NON FLIGHT
HARDWARE TEST NOT REQUIRED
TEST HARDWARE PER DRW TYPE, LOCATION DEFINED
TEST HARDWARE PER ASTM E 10 (WHERE INDICATED)
IN LIEU OF DRAWING TEST
NO NDE DESTRUCTIVE EXAMINATION TASKS REQ'D
NDE REQUIRED PER G-STD-005-CORE

THIS DRAWING WAS PRODUCED USING SOFTWARE: Pro/ENGINEER VERSION WF3
FILE NAME: 2129305_REV_A.drt
MODEL NAME: 2129305_REV_A.prt

NAME / DATE
DRAWN: A. BOYER
DESIGN: K. KEZERSKIS
CHECKED: CHRIS ANDERS
APPROVED: [illegible]
APPROVED: [illegible]
APPROVED: [illegible]
APPROVED FOR RELEASE: MARK FIEDLER

NATIONAL AERONAUTICS AND SPACE ADMINISTRATION — Goddard Space Flight Center, Greenbelt, Maryland

STAMPING INTERPRETED PER GSFC-3473-08.2

# FITTING, TEE, TUBE WELD

GD 2129305 REV A

CODE: 597 SCALE: 8/1 WEIGHT: SHEET 1 OF 2

| VARIES | GPM |
|---|---|
| NEXT ASSEMBLY | USED ON |

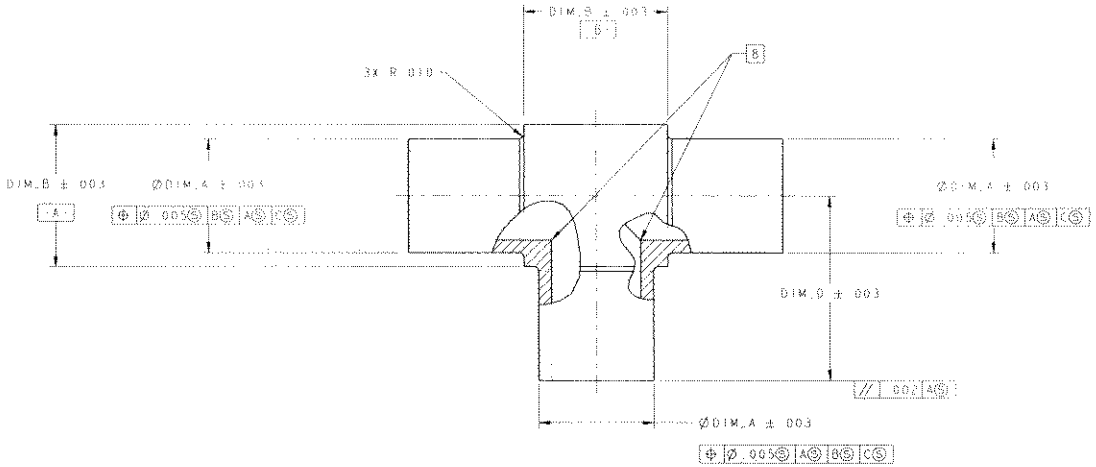


| PART NUMBER | DIM_A | DIM_B | DIM_C | DIM_D | DIM_E |
|---|---|---|---|---|---|
| 2129305-7 | .375 | .438 | 1.531 | 1.531 | .028 |
| 2129305-5 | .375 | .438 | .469 | .469 | .028 |
| 2129305-3 | .250 | .312 | 1.406 | 1.406 | .028 |
| 2129305-1 | .250 | .312 | .406 | .406 | .028 |

TABLE 1

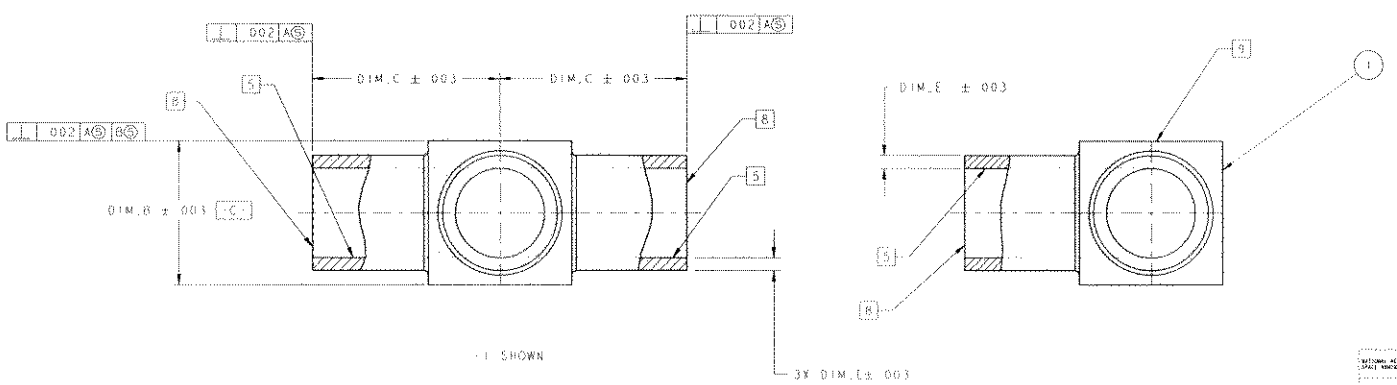


-1 SHOWN

This GPM Drawing has been RELEASED by the CM Office by LAL on 04/12/2010. All signatories listed for this document have their electronic approvals on file in the MIS Data Base and have been audited for accuracy by the GPM CM Office.

Goddard Space Flight Center

Greenbelt, Maryland

| NAME | ENGR | DATE |
|---|---|---|
| R. Bolko | KW | 06/30/09 |
| V. EZERSKI | VE | 10/30/09 |
| CHRIS ANDERS | CA | |
| MARK FIEBIG | MF | |

DRAWING INTERPRETED PER GSFC-4673 64

GD 2129305 REV A

CODE 591 SCALE: 8/1 SHEET 2 OF 2

| SYM | ZONE | REVISION DESCRIPTION | DATE | APPROVED |
|---|---|---|---|---|
| | | INITIAL RELEASE | [illegible] | [illegible] |
| A | | CHANGED DWN B TO A 004 | 12/27/2018 | [illegible] |

NOTES: UNLESS OTHERWISE SPECIFIED

1. MATERIAL CRES TYPE 304L OR 316L, BAR OR PLATE, ANNEALED CONDITION, IN ACCORDANCE WITH QQ-S-763 OR ASTM A 666. THE PARTS WILL BE MADE FROM RAW STOCK (PLATE OR BAR) PRODUCED BY THE VACUUM ARC REMELT (VAR) METHOD

2. PLATE THICKNESS OR BAR CROSS SECTION DIMENSIONS ARE NOT TO EXCEED TWO INCHES

3. DISCARD ONE THICKNESS OF PLATE EDGE MATERIAL (PARALLEL TO THE ROLLING DIRECTION) TO PREVENT INCORPORATION OF EDGE DEFECTS. THIS DISCARDED MATERIAL SHALL BE TAGGED AS SUCH AND RETURNED TO GSFC

4. THE VENDOR SHALL SUPPLY STOCK COUPONS TO GSFC. ONE INCH LENGTH FROM EACH END OF BAR OR PLATE. IF THE SAMPLE IS FROM PLATE, ONE INCH ACROSS THE ENTIRE WIDTH SHALL BE PROVIDED. GSFC SHALL PERFORM THE FOLLOWING METALLOGRAPHIC EXAMINATIONS:

   A. ASTM E-45 METHOD D

   B. ASTM A-262 METHOD E

   C. CHEMICAL COMPOSITION (INCLUDING CARBON CONTENT

5. FINISH OF THE INSIDE PASSAGES AND OUTSIDE OF THE TUBE STUBS SHALL BE 32 RA OR BETTER

6. THE INTERIOR PASSAGES OF THE FITTING SHALL BE ELECTROPOLISHED. THE VENDOR MAY, WITH PERMISSION FROM GSFC, SUBSTITUTE PASSIVATION FOR ELECTROPOLISHING. EACH FITTING WOULD BE PASSIVATED IN ACCORDANCE WITH ASTM A 380

7. NO BURRS, GOUGES, OR SCRATCHES ON ANY SURFACE

8. LEAVE AS SHARP EDGE, HOWEVER, DEBURR AS NEEDED WITH R .002 MAX

9. MARK EACH PART USING ELECTROCHEMICAL ETCHING IN ACCORDANCE WITH MIL-STD-792 TYPE II ON THE TUBE BODY. INCLUDE THE DRAWING NUMBER AND DASH NUMBER. THE MAXIMUM DEPTH OF THE MARKING MAY NOT EXCEED 0.002". LASER ENGRAVING (TYPE VIII) MAY BE USED WITH THE PERMISSION OF GSFC BUT MAY NOT EXCEED THE MAXIMUM DEPTH OF 0.002"

10. THE VENDOR SHALL DELIVER THE PARTS VISUALLY CLEAN AND INDIVIDUALLY BAGGED IN RESEALABLE PACKAGES. PRECISION CLEANING, CLEANLINESS VERIFICATION, AND BAGGING WILL BE ACCOMPLISHED BY GSFC.

11. EACH INDIVIDUAL PART WILL BE VISUALLY INSPECTED BY GSFC PRIOR TO PRECISION CLEANING. INSPECT WITH A STEREO MICROSCOPE AT 20X MAGNIFICATION OR BETTER. ALL EXTERIOR SURFACES WILL BE INSPECTED. INTERIOR SURFACES WILL BE INSPECTED WITHIN THE LIMITS OF THE EQUIPMENT (ONE ID MINIUM DESIRED). ALL VOIDS, CRACKS, AND LAMINATIONS WILL BE REPORTED

12. PRECISION CLEANING, CLEANLINESS VERIFICATION, AND BAGGING WILL BE ACCOMPLISHED BY GSFC IN ACCORDANCE WITH 597-WI-8700.2.1

The rights in this drawing have been NASA/GSFC copyrighted in accordance with 17 U.S.C. 105. All rights under the law are reserved. Reproduction in whole or in part without permission is prohibited. Permission may be sought from the Director, Office of Patent Counsel, Code 250, Goddard Space Flight Center, Greenbelt, MD 20771.

| ITEM | REQD | REQD/BLDG | PART NO. | DESCRIPTION | MATERIAL | MATERIAL SPEC & MO |
|---|---|---|---|---|---|---|
| NO | 2 | 2 | SEE TABLE | BAR FITTING, TEE, TUBE WELD | CRES | SEE NOTE 1 |

LIST OF MATERIAL

UNLESS OTHERWISE SPECIFIED DIMENSIONS ARE IN INCHES
TOLERANCES: .XX ±.010, .XXX ±.005, .XXXX ±.0005, ANGLES ±0°30', FRACTIONS ±1/16
REMOVE ALL BURRS AND SHARP EDGES A MAXIMUM OF .010 OR CHAMFER .010
☐ FLUORESCENT PENETRANT
☐ HARDNESS TEST NOT REQUIRED
☐ TEST HARDNESS PER ASTM E 18, LOCATION OPTIONAL
☐ TEST HARDNESS PER ASTM E 18 AT THE LOCATION SPECIFIED ON DRAWING ONLY
☐ NO NON DESTRUCTIVE EXAMINATION TESTS ARE REQUIRED
☐ NDE REQUIRED PER G STD 604 CODE

Goddard Space Flight Center, Greenbelt, Maryland

NATIONAL AERONAUTICS AND SPACE ADMINISTRATION

| | NAME | INIT | DATE |
|---|---|---|---|
| DESIGNED | R. Bogard | XB | [illegible] |
| DRAWN | E. Ezersky | VE | [illegible] |
| ENGINEER | Chris Anders | CA | [illegible] |
| APPROVED | S. Flanner | SF | [illegible] |
| APPROVED | P. Vinelberg | PV | [illegible] |
| APPROVED (SPACE) | | | |
| APPROVED CONTRACTOR | Mark Fleury | MF | [illegible] |

DRAWING INCORPORATES PER GSFC 1673-04-1

FITTING
TUBE WELD

GD 2179506 REV A

CODE 597 SCALE 8/1 WEIGHT SHEET 1 OF 2

THIS DRAWING WAS PRODUCED USING
SOFTWARE: PTC/ENGINEER VERSION WF3
FILE NAME: 2179506_REV_A.drl
MODEL NAME: 2179506_REV_A.prt

| VARIOUS | GPM |
|---|---|
| NEXT ASSEMBLY | USED ON |

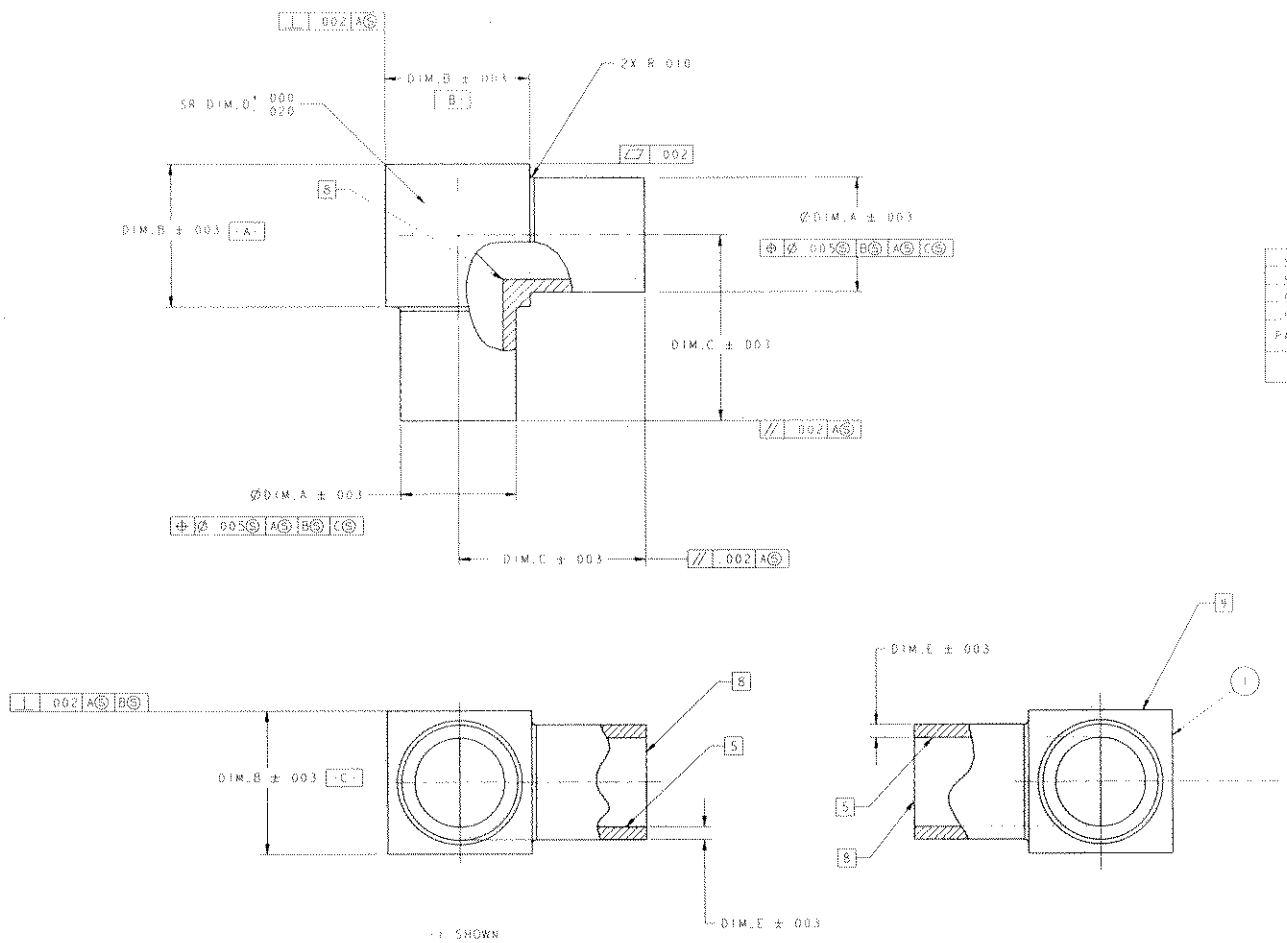


| PART NUMBER | DIM.A | DIM.B | DIM.C | DIM.D | DIM.E |
|---|---|---|---|---|---|
| 2129306-7 | 250 | 312 | 1.406 | .097 | .028 |
| 2129306-5 | 375 | 438 | 1.469 | .160 | .028 |
| 2129306-3 | 375 | 438 | 469 | .160 | .028 |
| 2129306-1 | 250 | 312 | 406 | .097 | .028 |

TABLE 1

This GPM Drawing has been RELEASED for the DIS office by LIA on 04/12/2018. All signatures listed for this document have been electronically approved in the WS Task Base and have been audited for accuracy in the GPM DIS office.

NATIONAL AERONAUTICS AND SPACE ADMINISTRATION — Goddard Space Flight Center — Greenbelt, Maryland

| NAME | INIT | DATE |
|---|---|---|
| DESIGNER: R. Wolfe | KW | 06/30/09 |
| DRAWN: V. EZERSKI | VE | 10/30/09 |
| CHECKED: Chris Anders | CA | |
| APPROVED | | |
| APPROVED | | |
| APPROVED SPECIAL | | |
| APPROVED ENGINEER: Mark Fiebig | MF | |

DRAWING INTERPRETED PER GSFC A673 6A 1

FITTING
ELBOW
TUBE WELD

GD 2129306 REV A

CODE: 597 SCALE: 8/1 SHEET 2 OF 2

| SYM | ZONE | REVISION DESCRIPTION | DATE | APPROVED |
|---|---|---|---|---|
| A | | ADDED 316L MATERIAL AS OPTION | | |

## NOTES UNLESS OTHERWISE SPECIFIED

1. MATERIAL CRES TYPE 304L OR 316L, BAR OR PLATE, ANNEALED CONDITION, IN ACCORDANCE WITH QQ-S-763 OR ASTM A 666. THE PARTS WILL BE MADE FROM RAW STOCK (PLATE OR BAR) PRODUCED BY THE VACUUM ARC REMELT (VAR) METHOD

2. PLATE THICKNESS OR BAR CROSS SECTION DIMENSIONS ARE NOT TO EXCEED TWO INCHES

3. DISCARD ONE THICKNESS OF PLATE EDGE MATERIAL (PARALLEL TO THE ROLLING DIRECTION) TO PREVENT INCORPORATION OF EDGE DEFECTS. THIS DISCARDED MATERIAL SHALL BE TAGGED AS SUCH AND RETURNED TO GSFC

4. THE VENDOR SHALL SUPPLY STOCK COUPONS TO GSFC. ONE INCH LENGTH FROM EACH END OF BAR OR PLATE. IF THE SAMPLE IS FROM PLATE, ONE INCH ACROSS THE ENTIRE WIDTH SHALL BE PROVIDED. GSFC SHALL PERFORM THE FOLLOWING METALLOGRAPHIC EXAMINATIONS

   A. ASTM E-45 METHOD D

   B. ASTM A-262 METHOD E

   C. CHEMICAL COMPOSITION INCLUDING CARBON CONTENT

5. FINISH OF THE INSIDE PASSAGES AND OUTSIDE OF THE TUBE STUBS SHALL BE 32 RA OR BETTER

6. THE INTERIOR PASSAGES OF THE FITTING SHALL BE ELECTROPOLISHED. THE VENDOR MAY, WITH PERMISSION FROM GSFC, SUBSTITUTE PASSIVATION FOR ELECTROPOLISHING. EACH FITTING WOULD BE PASSIVATED IN ACCORDANCE WITH ASTM A 380

7. NO BURRS, GOUGES, OR SCRATCHES ON ANY SURFACE

8. LEAVE AS SHARP EDGE, HOWEVER, DEBURR AS NEEDED WITH R .002 MAX

9. MARK EACH PART USING ELECTROCHEMICAL ETCHING IN ACCORDANCE WITH MIL-STD-792 TYPE II ON THE TUBE BODY. INCLUDE THE DRAWING NUMBER AND DASH NUMBER. THE MAXIMUM DEPTH OF THE MARKING MAY NOT EXCEED 0.002". LASER ENGRAVING (TYPE VIII) MAY BE USED WITH THE PERMISSION OF GSFC BUT MAY NOT EXCEED THE MAXIMUM DEPTH OF 0.002"

10. THE VENDOR SHALL DELIVER THE PARTS VISUALLY CLEAN AND INDIVIDUALLY BAGGED IN RESEALABLE PACKAGES. PRECISION CLEANING, CLEANLINESS VERIFICATION, AND BAGGING WILL BE ACCOMPLISHED BY GSFC.

11. EACH INDIVIDUAL PART WILL BE VISUALLY INSPECTED BY GSFC PRIOR TO PRECISION CLEANING. INSPECT WITH A STEREO MICROSCOPE AT 20X MAGNIFICATION OR BETTER. ALL EXTERIOR SURFACES WILL BE INSPECTED. INTERIOR SURFACES WILL BE INSPECTED WITHIN THE LIMITS OF THE EQUIPMENT (ONE ID MINIUM DESIRED). ALL VOIDS, CRACKS, AND ERMINATIONS WILL BE REPORTED

12. PRECISION CLEANING, CLEANLINESS VERIFICATION, AND BAGGING WILL BE ACCOMPLISHED BY GSFC IN ACCORDANCE WITH 597-WI-8700.2.1

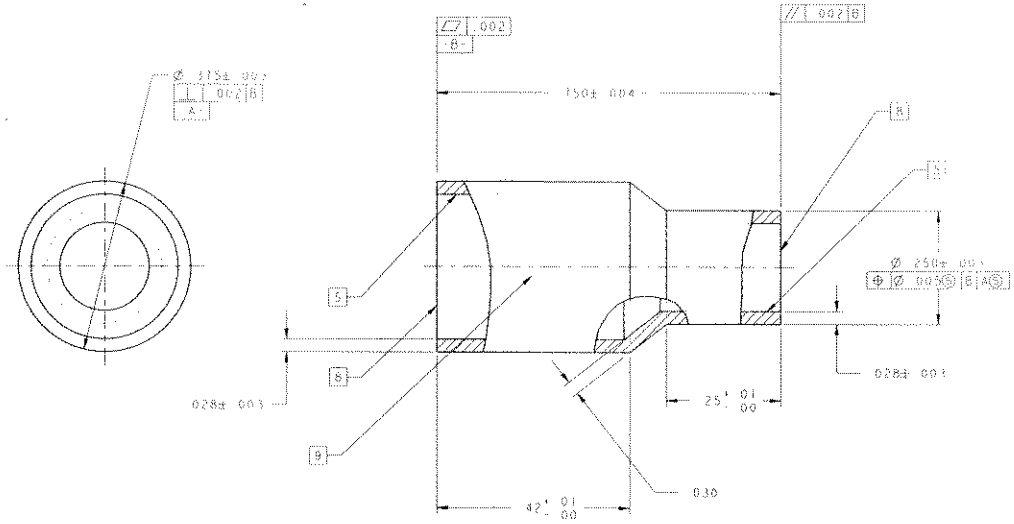


This GPM Drawing has been RELEASED by the CM Office by LRZ on 09/12/2010. All signatures listed for this document have their electronic approvals on file in the MDS Data Base and have been audited for accuracy by the GPM CM Office.

| ITEM | REQD | REQD | PART NO | DESCRIPTION | MATERIAL | MATERIAL SPEC & NO |
|---|---|---|---|---|---|---|
| 1 | | | | BAR | CRES | SEE NOTE 1 |

LIST OF MATERIAL

UNLESS OTHERWISE SPECIFIED DIMENSIONS ARE IN INCHES

TOLERANCES: .X ±.1; .XX ±.0; .XXX ±.005; ∠ ±0.5°; FRACTIONS ±1/16; ✓ 125

REMOVE ALL BURRS AND SHARP EDGES R .015 OR CHAMFER .015

FINISH: NATURAL / NON-FLAKE

HARDNESS TEST NOT REQUIRED

TEST HARDNESS PER ASTM E 18, COLLATION OPTIONAL

TEST HARDNESS PER ASTM E 18 WHERE INDICATED ON FIELD OF DRAWING TOOL

NO NON-DESTRUCTIVE EXAMINATION (NDE) REQ'D

NDE REQUIRED PER X-X-XXX CODE

THIS DRAWING WAS PRODUCED USING SOFTWARE: Pro/ENGINEER Revision: WF 3

FILE NAME: 2129282 REV A.DT

MODEL NAME: 2129281 REV A.PRT

2129282 | GPM

WELD ASSEMBLY | USED ON

NATIONAL AERONAUTICS AND SPACE ADMINISTRATION — Goddard Space Flight Center, Greenbelt, Maryland

DRAWING INTERPRETED PER GSFC X-X-XXX REV X

| | NAME | SIGN | DATE |
|---|---|---|---|
| DETAILED | R. Wells | | 09/24/2010 |
| DRAWN | T. EZERSKI | VE | 09/24/2010 |
| CHECKED | Chris Anders | CA | 09/24/2010 |
| APPROVED | R. Wells | | 09/24/2010 |
| APPROVED | T. Ezerski | | 09/24/2010 |
| APPROVED GSFC | | | |
| APPROVED CALCULA | Mark Fiebig | MF | 09/24/2010 |

GD

CODE: 597 SCALE: 8/1 WEIGHT: SHEET 1 OF 1

REV A

NOTES: UNLESS OTHERWISE SPECIFIED

1. MATERIAL CRES TYPE 304L, BAR OR PLATE, ANNEALED CONDITION, IN ACCORDANCE WITH QQ-S-763 OR ASTM A 666. THE PARTS WILL BE MADE FROM RAW STOCK (PLATE OR BAR) PRODUCED BY THE VACUUM ARC REMELT (VAR) METHOD.

2. PLATE THICKNESS OR BAR CROSS SECTION DIMENSIONS ARE NOT TO EXCEED TWO INCHES.

3. DISCARD ONE THICKNESS OF PLATE EDGE MATERIAL (PARALLEL TO THE ROLLING DIRECTION) TO PREVENT INCORPORATION OF EDGE DEFECTS. THIS DISCARDED MATERIAL SHALL BE TAGGED AS SUCH AND RETURNED TO GSFC.

4. THE VENDOR SHALL SUPPLY STOCK COUPONS TO GSFC. ONE INCH LENGTH FROM EACH END OF BAR OR PLATE. IF THE SAMPLE IS FROM PLATE, ONE INCH ACROSS THE ENTIRE WIDTH SHALL BE PROVIDED. GSFC SHALL PERFORM THE FOLLOWING METALLOGRAPHIC EXAMINATIONS:

   A. ASTM E-45 METHOD D

   B. ASTM A-262 METHOD E

   C. CHEMICAL COMPOSITION INCLUDING CARBON CONTENT.

5. FINISH OF THE INSIDE PASSAGES AND OUTSIDE OF THE TUBE STUBS SHALL BE 32 RA OR BETTER.

6. THE INTERIOR PASSAGES OF THE FITTING SHALL BE ELECTROPOLISHED. THE VENDOR MAY, WITH PERMISSION FROM GSFC, SUBSTITUTE PASSIVATION FOR ELECTROPOLISHING. EACH FITTING WOULD BE PASSIVATED IN ACCORDANCE WITH ASTM A 380.

7. NO BURRS, GOUGES, OR SCRATCHES ON ANY SURFACE.

8. LEAVE AS SHARP EDGE, HOWEVER, DEBURR AS NEEDED WITH R .002 MAX.

9. MARK EACH PART USING ELECTROCHEMICAL ETCHING IN ACCORDANCE WITH MIL-STD-792 TYPE II ON THE TUBE BODY. INCLUDE THE DRAWING NUMBER AND DASH NUMBER. THE MAXIMUM DEPTH OF THE MARKING MAY NOT EXCEED 0.002". LASER ENGRAVING (TYPE VII) MAY BE USED WITH THE PERMISSION OF GSFC BUT MAY NOT EXCEED THE MAXIMUM DEPTH OF 0.002".

10. THE VENDOR SHALL DELIVER THE PARTS VISUALLY CLEAN AND INDIVIDUALLY BAGGED IN RESEALABLE PACKAGES. PRECISION CLEANING, CLEANLINESS VERIFICATION, AND BAGGING WILL BE ACCOMPLISHED BY GSFC.

11. EACH INDIVIDUAL PART WILL BE VISUALLY INSPECTED BY GSFC PRIOR TO PRECISION CLEANING. INSPECT WITH A STEREO MICROSCOPE AT 20X MAGNIFICATION OR BETTER. ALL EXTERIOR SURFACES WILL BE INSPECTED. INTERIOR SURFACES WILL BE INSPECTED WITHIN THE LIMITS OF THE EQUIPMENT (ONE ID MINIMUM DESIRED). ALL VOIDS, CRACKS, AND LAMINATIONS WILL BE REPORTED.

12. PRECISION CLEANING, CLEANLINESS VERIFICATION, AND BAGGING WILL BE ACCOMPLISHED BY GSFC IN ACCORDANCE WITH 597-WI-8700.2.1.

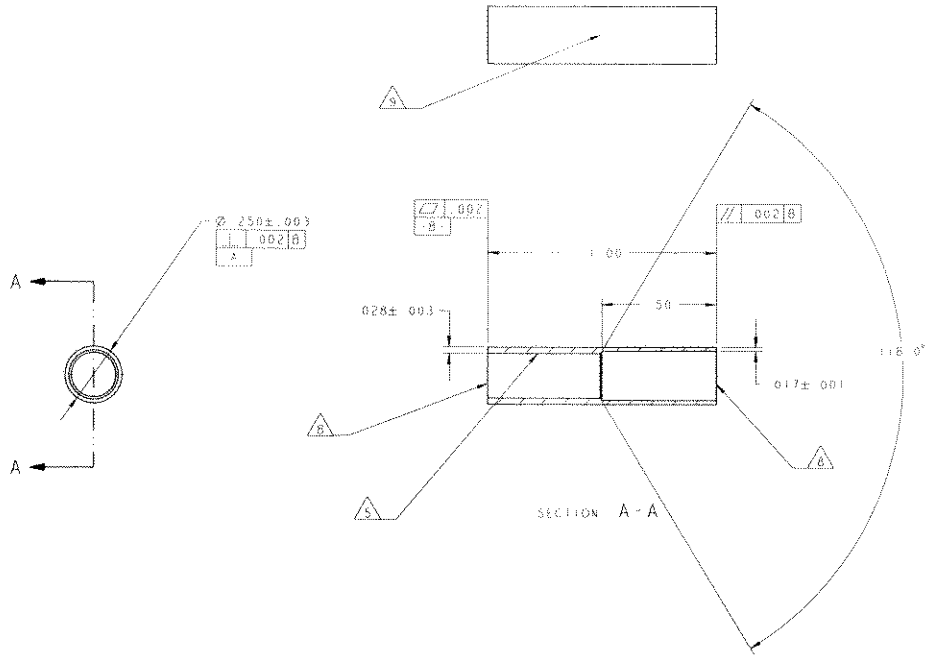


This GPM Drawing has been RELEASED by the CM Office by LAS on 03/08/2010. All signatories listed for this document have their electronic approvals on file in the MIS Data Base and have been audited for accuracy by the GPM CM Office.

| ITEM NO | REQD | REQD | PART NO | DESCRIPTION | MATERIAL | MAT'L SPEC OR EAGLE CODE |
|---|---|---|---|---|---|---|
| | X | | 2129312 | TRANSITION FITTING, FORWARD AND AFT THRUSTERS | CRES | |

LIST OF MATERIAL

THIRD ANGLE PROJECTION

INCH

HYBRID METRIC/INCH

METRIC

HARDWARE CLASSIFICATION: FLIGHT

SOFTWARE: Pro/ENGINEER

FILE LOCATION

DRAWING FILE: 2129312 REV - 11

MODEL FILE: 2129312 REV - 2

FOLLOWING DIMENSIONS OF TO BE READ, SHOW DIMENSIONS DIRECTLY ABOVE, AND SHARP EDGES & SIZE OF CHAMFER MAX.

TOLERANCES FOR INCH: .X ±.03, .XX ±.02, .XXX ±.005, .XXXX ±.0005, .X ±1/2°, .XX ±1/4°, FINISH 125 RA

TOLERANCES FOR METRIC: .X ±.1, .XX ±.02, .XXX ±.005, .XXXX ±.0005, .X ±0.5°, .XX ±0.25°, .XXX ±0.125°, FINISH 3.2

VARIOUS | GPM

NEXT ASSY | USED ON

APPROVED: Y. Ban | YB | 02/17/10

APPROVED: MARK FIEBIG | MF | 02/05/10

Goddard Space Flight Center

| NAME | INIT | DATE |
|---|---|---|
| V. EZERSKI | VE | 02/05/10 |
| V. EZERSKI | VE | 02/05/10 |
| CHRIS ANDERS | CA | 02/16/10 |

DRAWING INTERPRETED PER 500.PG.8700.2.5

TRANSITION FITTING, FORWARD AND AFT THRUSTERS, GPM PROPULSION SYSTEM

D 36FC1 2129312

SCALE: .X2

SHEET 1 OF 1

2129312