NOTICE — WHEN GOVERNMENT DRAWINGS, SPECIFICATIONS, OR OTHER DATA ARE USED FOR ANY PURPOSE OTHER THAN IN CONNECTION WITH A DEFINITELY RELATED GOVERNMENT PROCUREMENT OPERATION, THE UNITED STATES GOVERNMENT THEREBY INCURS NO RESPONSIBILITY NOR ANY OBLIGATION WHATSOEVER; AND THE FACT THAT THE GOVERNMENT MAY HAVE FORMULATED, FURNISHED, OR IN ANY WAY SUPPLIED THE SAID DRAWINGS, SPECIFICATIONS OR OTHER DATA IS NOT TO BE REGARDED BY IMPLICATION OR OTHERWISE AS IN ANY MANNER LICENSING THE HOLDER OR ANY OTHER PERSON OR CORPORATION, OR CONVEYING ANY RIGHTS OR PERMISSION TO MANUFACTURE, USE, OR SELL ANY PATENTED INVENTION THAT MAY IN ANY WAY BE RELATED THERETO.

NATIONAL AERONAUTICS AND SPACE ADMINISTRATION
JOHN F. KENNEDY SPACE CENTER

REVITIALIZE KSC HIGH AND MEDIUM VOLTAGE ELECTRICAL DISTRIBUTION SYSTEMS
REPLACE PROTECTIVE RELAYS AT C5, C5A AND ORSINO SUBSTATIONS WITH SEL RELAYS
PCN 98778

INDEX OF DRAWINGS

SHEET NO.	REV.	FUNCTION CODE	
1	–	V1	VICINITY MAP, PROJECT LOCATION MAP AND INDEX OF DRAWINGS
2	–	E1	LEGEND AND GENERAL NOTES
3	–	E2	C5 AND C5A 13.8KV SINGLE LINE DIAGRAM
4	–	E3	ORSINO SUBSTATION 13.2KV ONE LINE DIAGRAM
5	–	E4	CONTROL BUILDING PANEL LOCATIONS
6	–	E5	TYPICAL BUS TIE, STATION SERVICE & CABLE TIE BREAKERS AC SCHEMATIC C5A SUBSTATION
7	–	E6	TYPICAL BUS TIE, STATION SERVICE & CABLE TIE BREAKERS DC SCHEMATIC C5A SUBSTATION
8	–	E7	TYPICAL FEEDER BREAKER AC SCHEMATIC C5A SUBSTATION
9	–	E8	TYPICAL FEEDER BREAKER DC SCHEMATIC C5A SUBSTATION
10	–	E9	TYPICAL "IB" BREAKER AC SCHEMATIC C5 SUBSTATION
11	–	E10	TYPICAL "IB" BREAKER DC SCHEMATIC C5 SUBSTATION
12	–	E11	TYPICAL FEEDER BREAKER AC SCHEMATIC C5 SUBSTATION
13	–	E12	TYPICAL FEEDER BREAKER DC SCHEMATIC C5 SUBSTATION
14	–	E13	TYPICAL CABLE TIE BREAKER AC SCHEMATIC C5 SUBSTATION
15	–	E14	TYPICAL CABLE TIE BREAKER DC SCHEMATIC C5 SUBSTATION
16	–	E15	TYPICAL BUS TIE BREAKER AC SCHEMATIC C5 SUBSTATION
17	–	E16	TYPICAL BUS TIE BREAKER DC SCHEMATIC C5 SUBSTATION
18	–	E17	EXISTING C5 13.8KV BUS DIFFERENTIAL RELAY SCHEMATICS
19	–	E18	MODIFIED C5 13.8KV BUS DIFFERENTIAL RELAY SCHEMATICS
20	–	E19	TYPICAL TRANSFORMER BREAKER AC SCHEMATIC ORSINO SUBSTATION
21	–	E20	TYPICAL TRANSFORMER BREAKER DC SCHEMATIC ORSINO SUBSTATION
22	–	E21	TYPICAL FEEDER BREAKER AC SCHEMATIC ORSINO SUBSTATION
23	–	E22	TYPICAL FEEDER BREAKER DC SCHEMATIC ORSINO SUBSTATION
24	–	E23	TYPICAL "IB" BREAKER AC SCHEMATIC ORSINO SUBSTATION
25	–	E24	TYPICAL "IB" BREAKER DC SCHEMATIC ORSINO SUBSTATION
26	–	E25	C5 AND C5A PANEL ELEVATIONS
27	–	E26	C5/C5A COMMUNICATIONS SYSTEM DIAGRAM
28	–	E27	ORSINO COMMUNICATIONS SYSTEM DIAGRAM
29	–	E28	MISCELLANEOUS PANEL ELEVATIONS

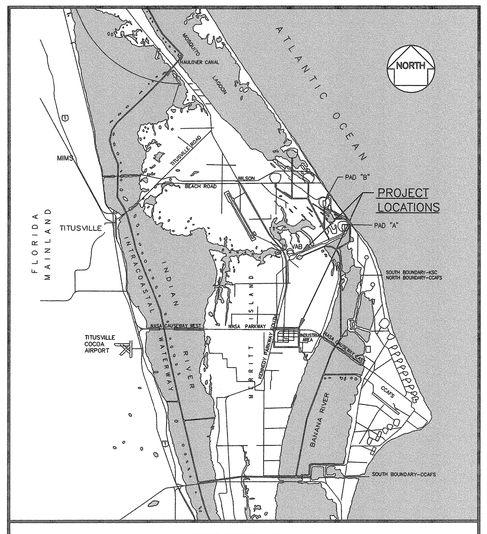

VICINITY MAP

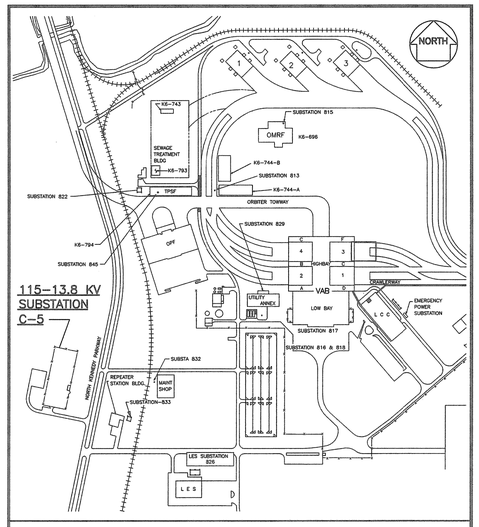

C–5 SUBSTATION PROJECT LOCATION MAP

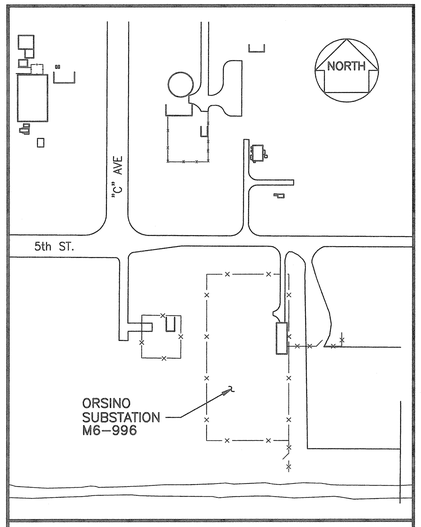

ORSINO SUBSTATION PROJECT LOCATION MAP

NASA KSC Export Control Office (ECO)
Export/SBU Determination Record
EDDR#_____

TITLE OF DOCUMENT:				
SENSITIVE BUT UNCLASSIFIED (SBU) INSTRUCTIONS: This item must be reviewed under the requirements for "Sensitive But Unclassified Information" as described in NPR 1600.1, Chapter 5.24 http://nodis3.gsfc.nasa.gov/main_lib.html				
	Yes	No	SBU Reviewer's Signature	Date
Document contains SBU?		✓	Ernesto T. Camacho	9/29/09
EXPORT CONTROL (EC) INSTRUCTIONS: If the document includes export–controlled data, contact your directorate Export Control Representative or the KSC ECO Help Desk (867–9209) for a determination of the proper export category. http://exportcontrol.ksc.nasa.gov/index.cfm				
ECO Reviewer's Name and Organization			ECO Reviewer's Signature	Date
Ernesto T. Camacho, TA-B3A			Ernesto T. Camacho	9/29/09

	EXPORT DETERMINATION (☑ one box only)	
EAR 99 NLR	☑ EAR 99 NLR	The information contained in the document is technical in content, but is not technical data as defined by the ITAR or the EAR, and therefore is EAR 99 NLR (no export licenses required). (General Prohibition Six (Embargo) applies to all items subject to the EAR, i.e. items on the CCL, and within EAR 99 NLR. You may not export, re-export or transfer (in-country) to a prohibited end-user or end-use. Prohibitions of part 746 (Embargos and Other Special Controls) of the EAR and 22 CFR part 126.1 of the ITAR.)
EAR Controlled	☐	This document is within the purview of the Export Administration Regulations (EAR), 15 CFR 730–774, and is export controlled. It may not be transferred to foreign nationals in the U.S. or abroad without specific approval of a knowledgeable NASA export control official, and/or unless an export license or license exception is obtained/available from the Bureau of Industry and Security, United States Department of Commerce. Violations of these regulations are punishable by fine, imprisonment, or both.
ITAR Controlled	☐	This document contains information which falls under the purview of the U.S. Munitions List (USML), as defined in the International Traffic in Arms Regulations (ITAR), 22 CFR 120–130, and is export controlled. It shall not be transferred to foreign nationals, in the U.S. or abroad, without specific approval of a knowledgeable NASA export control official, and/or unless an export license or license exemption is obtained/available from the United States Department of State. Violations of these regulations are punishable by fine, imprisonment, or both.

(Stamp Revision: (05–19–2009))

PROVIDE SHALL MEAN TO FURNISH AND INSTALL.
TECHNICAL SPECIFICATION 79K38613

Prepared By:

Fred Wilson & Associates, Inc.
Consulting Engineers
C.A. NO. 7188 • 904-398-8636
3970 Hendricks Avenue • Jacksonville, FL 32207

SYM.	ZONE	DESCRIPTION	DATE	APPROVED
		REVISIONS		

ENGINEER OF RECORD: LARRY JONES — PE LICENSE NO. 19837

Fred Wilson & Associates, Inc.
Consulting Engineers
C.A. NO. 7188 • 904-398-8636
3970 Hendricks Avenue • Jacksonville, FL 32207

SIGNATURES		DATE
DESIGNED	L. JONES	6–09
DRAWN	B. GEMMELL	6–09
CHECKED	L. JONES	6–09
SUBMITTED		9/28/09
APPROVED		9/28/09
APPROVED		9/29/09
APPROVED		
APPROVED		
APPROVED		
APPROVED		

NATIONAL AERONAUTICS AND SPACE ADMINISTRATION
JOHN F. KENNEDY SPACE CENTER, NASA
KENNEDY SPACE CENTER, FLORIDA

REPLACE PROTECTIVE RELAYS AT C5, C5A AND ORSINO SUBSTATIONS WITH SEL RELAYS

VICINITY MAP, PROJECT LOCATION MAP AND INDEX OF DRAWINGS

FILE NO.	SIZE	DWG. NO.
	F	79K38612
PROJ. NO. PCN 98778		SHEET 1 OF 29

A/E FILE No. 0601\0601–25\0601–25.4
FILE: V1.DWG
THIS DRAWING PREPARED BY AutoCAD 2008

V1

NOTICE – WHEN GOVERNMENT DRAWINGS, SPECIFICATIONS, OR OTHER DATA ARE USED FOR ANY PURPOSE OTHER THAN IN CONNECTION WITH A DEFINITELY RELATED GOVERNMENT PROCUREMENT OPERATION, THE UNITED STATES GOVERNMENT THEREBY INCURS NO RESPONSIBILITY NOR ANY OBLIGATION WHATSOEVER; AND THE FACT THAT THE GOVERNMENT MAY HAVE FORMULATED, FURNISHED, OR IN ANY WAY SUPPLIED THE SAID DRAWINGS, SPECIFICATIONS OR OTHER DATA, IS NOT TO BE REGARDED BY IMPLICATION OR OTHERWISE AS IN ANY MANNER LICENSING THE HOLDER OR ANY OTHER PERSON OR CORPORATION, OR CONVEYING ANY RIGHTS OR PERMISSION TO MANUFACTURE, USE, OR SELL ANY PATENTED INVENTION THAT MAY IN ANY WAY BE RELATED THERETO.

GENERAL NOTES

1. ALL ELECTRICAL WORK AND MATERIAL, UNLESS NOTED AS EXISTING OR GOVERNMENT FURNISHED, IS NEW AND SHALL BE PROVIDED BY THE CONTRACTOR. ALL ELECTRICAL CONNECTIONS AND/OR PANEL MODIFICATIONS ARE TO BE PERFORMED BY THE CONTRACTOR.
2. ALL WORK SHALL BE COORDINATED WITH THE GOVERNMENT. NO WORK SHALL COMMENCE WITHOUT GOVERNMENT APPROVAL FOR EACH PHASE OF THE PROJECT. OUTAGE REQUESTS SHALL BE SUBMITTED AT LEAST 21 WORKING DAYS PRIOR TO THE START OF THE REQUESTED OUTAGE.
3. THE CONTRACTOR SHALL BE REQUIRED TO COORDINATE WORK WITH THE ISC AND THE CONTRACTING OFFICER FOR ALL SYSTEMS BEING INSTALLED.
4. THE CONTRACTOR SHALL EXERCISE EXTREME CAUTION WHEN WORKING IN STATION CONTROL PANELS. AT THE C5, C5A AND ORSINO SUBSTATIONS. WHEN MORE THAN ONE OVERCURRENT RELAY IS BEING REPLACED IN A RELAY PANEL, THE CONTRACTOR SHALL SCHEDULE OUTAGES FOR BOTH OF THE ASSOCIATED CIRCUITS.
5. THE GOVERNMENT WILL PROVIDE ALL RELAY SETTINGS TO THE CONTRACTOR AS REQUIRED FOR TESTING AND COMMISSIONING BY THE CONTRACTOR'S SPECIALIST AND TESTING FIRM.
6. AT THE END OF THE PROJECT, THE CONTRACTOR SHALL PROVIDE FINAL "AS BUILT" DRAWINGS OF THE CHANGES MADE FOR EACH RELAY INSTALLED. THE AS BUILT DRAWINGS SHALL INCLUDE MODIFIED AC/DC BREAKER SCHEMATICS AND WIRING DRAWINGS ASSOCIATED WITH EACH STATION PANEL THAT THE CONTRACTOR PERFORMED WORK IN.
7. THE CONTRACTOR SHALL PROVIDE ALL PROTECTIVE RELAYS, RELAY MOUNTING ADAPTER KITS, TEST SWITCHES, ETC., AS REQUIRED FOR THE PROJECT UNLESS LISTED AS BEING GOVERNMENT FURNISHED (GFE).
8. THE CONTRACTOR SHALL PROVIDE ALL COMMUNICATIONS EQUIPMENT AND ASSOCIATED HARDWARE AS INDICATED ON THE DRAWINGS.
9. WHERE THE CONTRACT DRAWINGS DEPICT AC OR DC SCHEMATICS, PANEL WIRING OR EQUIPMENT INTERCONNECTIONS, THE DRAWINGS ARE INCLUDED TO INDICATE THE "FUNCTIONAL" AND/OR "REPRESENTATIVE FIELD WIRING" INTERCONNECTIONS REQUIRED FOR THE PROJECT ONLY. THE CONTRACTOR SHALL BE RESPONSIBLE TO PREPARE AND SUBMIT THE ACTUAL FIELD RECORD DRAWINGS STRICTLY IN ACCORDANCE WITH REQUIREMENTS OF SECTION 16960 OF THE CONTRACT SPECIFICATIONS.
10. (21) GFE SEL–751A RELAYS REQUIRE THE REMOVAL AND REPLACEMENT OF THE 1 AMP CURRENT INPUT CARDS. THE CONTRACTOR SHALL PROVIDE (21) SEL PART NUMBER 9724L851 (CONFORMAL COATING), 5 AMP CURRENT INPUT CARDS TO REPLACE THE EXISTING CARDS UNDER THE SUPERVISION OF SEL PERSONNEL. THE CONTRACTOR SHALL ALSO PROVIDE UPDTAED PART NUMBER/SERIAL NUMBER LABELS AND AFFIX THEM TO THE RELAYS. THE LABELS MAY BE OBTAINED FROM SCHWEITZER ENGINEERING LABORATORIES.
11. REFERENCE DRAWINGS WILL BE PROVIDED TO THE CONTRACTOR AFTER CONTRACT AWARD.

SINGLE LINE, SCHEMATIC & CONNECTION DIAGRAMS LEGEND

- NOTE REFERENCE
- POTENTIAL TRANSFORMER
- CURRENT TRANSFORMER, 1 PER PHASE (WITH POLARITY INDICATED) 1200:5 MR – MULTI RATIO CONN 1200:5 – CONNECTED TAP
- TRANSFORMER WITH LTC △ DELTA CONNECTED PRIMARY GROUNDED WYE CONNECTED SECONDARY
- S.A. SURGE ARRESTOR
- GROUND
- FUSE
- EXISTING EQUIPMENT
- REMOVE EQUIPMENT
- PROVIDE EQUIPMENT
- EXISTING TRANSFORMER
- CONNECTION – DELTA, GROUNDED WYE
- EXISTING DISCONNECT SWITCH (NORMALLY OPEN) N.O. – NORMALLY OPEN N.C. – NORMALLY CLOSED
- SEL 751A DEVICE 50/51 — FEEDER PROTECTION RELAY
- SEL 587Z DEVICE 87B–1 — BUS DIFFERENTIAL RELAY –1 INDICATES BUS DIFFERENTIAL ZONE. (TYPICAL FOR ZONES 2 & 3)
- EXISTING OUTDOOR SF6 OR VACUUM CIRCUIT BREAKER
- EXISTING INDOOR DRAWOUT VACUUM CIRCUIT BREAKER
- HOOK STICK OPERATED DISCONNECT SWITCH
- INDICATING LIGHT –R–RED W–WHITE G–GREEN A–AMBER
- NORMALLY OPEN CONTACT
- NORMALLY CLOSED CONTACT
- SOLENOID, RELAY, COIL
- --R--- REMOVE WIRING & CONNECTIONS

REFERENCE DRAWINGS:

98K05162 – C5 POWER SUBSTATION CONFIGURATION DRAWINGS

98K05169 – ORSINO HIGH VOLTAGE CONFIGURATION DRAWINGS

SELAH GROUP , INC. AS–BUILT DRAWINGS FOR REPAIRS OF THE C5 SUBSTATION, PCN 97746.3

MILITARY CONSTRUCTION CORP., AS–BUILT DRAWINGS FOR C5 REPLACEMENT VCB CONTROL, PCN 97089

KEMCO INDUSTRIES, INC., AS–BUILT DRAWINGS FOR ORSINO SUBSTATION – REPAIRS TO PRIMARY ELECTRICAL POWER SYSTEMS, PHASE 2, KSC PROJECT NO. NNK06EC88C

MILITARY CONSTRUCTION CORP., AS–BUILT DRAWINGS FOR REPLACE ORSINO TRANSFORMERS T–1 THRU T–6, PCN 96964

INDOOR VACCLAD W SWITCHGEAR – THREE LINE DIAGRAMS CUTLER–HAMMER 7072–Y01 THROUGH 7072–Y05

DETAIL REFERENCE

INDIVIDUAL SECTION, ELEVATION OR DETAIL REFERENCE

SHEET NUMBER WHERE SECTION, ELEVATION OR DETAIL IS SHOWN OR REFERRED FROM

ABBREVIATIONS

A	–	AMMETER
AIC	–	AMPS INTERRUPTING CAPACITY
AS	–	AMMETER SWITCH
BIL	–	BASIC INSULATION IMPULSE LEVEL (WITHSTAND RATING)
BKR	–	BREAKER
BSD	–	BARE SOFT DRAWN
C. / CDT.	–	CONDUIT
CKT.	–	CIRCUIT
COMM	–	COMMUNICATION CABLE
CU	–	COPPER
FDR	–	FEEDER
GFE	–	GOVERNMENT FURNISHED EQUIPMENT
GRS	–	GALVANIZED RIGID STEEL
ISC	–	INSTITUTIONAL SERVICES CONTRACTOR
J.B.	–	JUNCTION BOX
KCMIL	–	THOUSAND CIRCULAR MILS
M.O.	–	MOTOR OPERATED
MRCT	–	MULTI–RATIO CURRENT TRANSFORMER
N.I.C.	–	NOT IN CONTRACT
SEL	–	SCHWEITZER ENGINEERING LABORATORIES
SF6	–	SULFUR HEXAFLOURIDE
STA SVC	–	STATION SERVICE
SW	–	SWITCH
TRANSF.	–	TRANSFORMER
U/G	–	UNDERGROUND
VAC	–	VACUUM
VCB	–	VACUUM CIRCUIT BREAKER

SYM.	ZONE	DESCRIPTION	DATE	APPROVED
REVISIONS				

ENGINEER OF RECORD: LARRY JONES — PE LICENSE NO. 19837

Fred Wilson & Associates, Inc. Consulting Engineers
C.A. NO. 7188 • 904-398-8636
3970 Hendricks Avenue • Jacksonville, FL 32207

SIGNATURES		DATE
DESIGNED	L. JONES	6–09
DRAWN	B. GEMMELL	6–09
CHECKED	L. JONES	6–09
SUBMITTED		7/24/09
APPROVED		7/24/09
APPROVED		
APPROVED		
APPROVED		
APPROVED		
APPROVED		

NATIONAL AERONAUTICS AND SPACE ADMINISTRATION
JOHN F. KENNEDY SPACE CENTER, NASA
KENNEDY SPACE CENTER, FLORIDA

REPLACE PROTECTIVE RELAYS AT C5, C5A AND ORSINO SUBSTATIONS WITH SEL RELAYS

LEGEND AND GENERAL NOTES

FILE NO. | SIZE F | DWG. NO. 79K38612

PROJ. NO. PCN 98778 | SHEET 2

A/E FILE No. 0601\0601–25\0601–25.4
FILE: E1.DWG
THIS DRAWING PREPARED BY AutoCAD 2005

E1

NOTICE – WHEN GOVERNMENT DRAWINGS, SPECIFICATIONS, OR OTHER DATA ARE USED FOR ANY PURPOSE OTHER THAN IN CONNECTION WITH A DEFINITELY RELATED GOVERNMENT PROCUREMENT OPERATION, THE UNITED STATES GOVERNMENT THEREBY INCURS NO RESPONSIBILITY NOR ANY OBLIGATION WHATSOEVER; AND THE FACT THAT THE GOVERNMENT MAY HAVE FORMULATED, FURNISHED, OR IN ANY WAY SUPPLIED THE SAID DRAWINGS, SPECIFICATIONS OR OTHER DATA IS NOT TO BE REGARDED BY IMPLICATION OR OTHERWISE AS IN ANY MANNER LICENSING THE HOLDER OR ANY OTHER PERSON OR CORPORATION, OR CONVEYING ANY RIGHTS OR PERMISSION TO MANUFACTURE, USE, OR SELL ANY PATENTED INVENTION THAT MAY IN ANY WAY BE RELATED THERETO.

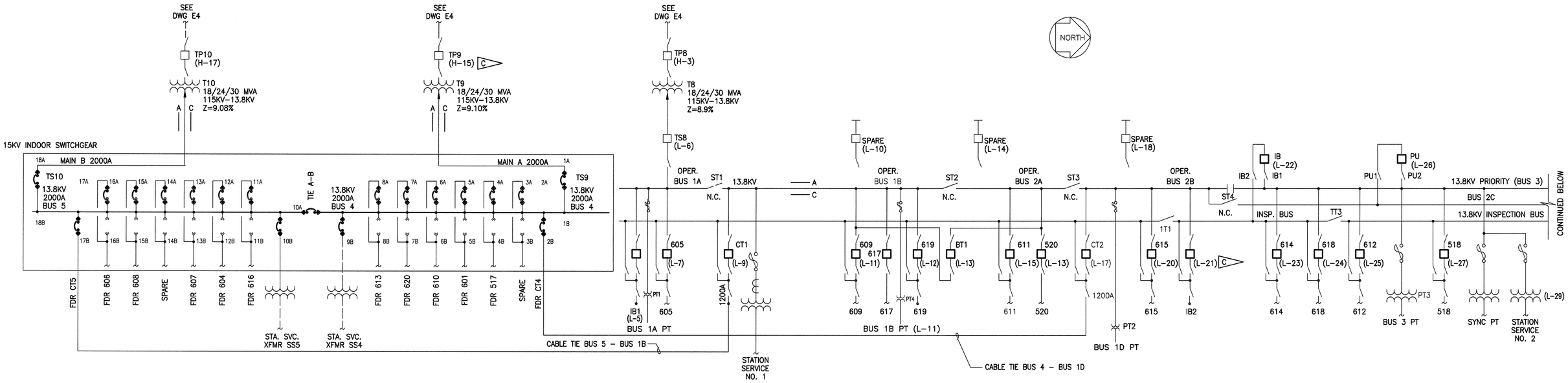

C5/C5A SUBSTATION – EXISTING PROTECTIVE RELAY CONFIGURATION

C5 SUBSTATION	PNL/CUB	MMCO	KCGG	MICROSHIELD	CONN C.T. RATIO
TIE IB	16		X		600/5
FDR IBI	3		X		600/5
FDR IB2	14		X		600/5
TIE BT1	8		X		1200/5
TIE CT1	6		X		1200/5
TIE CT2	12		X		1200/5
FDR 518	18		X		300/5
FDR 520	9		X		200/5
FDR 605	4		X		600/5
FDR 609	6		X		600/5
FDR 611	11		X		600/5
FDR 612	18		X		600/5
FDR 614	17		X		600/5
FDR 615	14		X		600/5
FDR 617	9		X		600/5
FDR 618	17		X		600/5
FDR 619	8		X		600/5
TIE PU	19		X		600/5
SPARE	4,11,12		X,X,X		
SPARE (OLD TS3)	N/A				
SPARE (OLD TS4)	N/A				
SPARE (OLD TS5)	N/A				
SPARE (OLD TS6)	N/A				
C5A SUBSTATION					
TS9	CUB 1	X	SCHEDULED TO BE INSTALLED UNDER PCN 98778 – RING BUS CONFIGURATION		1200/5
CT4	CUB 2	X			1200/5
SPARE	CUB 3	X			1200/5
517	CUB 4	X			600/5
601	CUB 5	X			600/5
610	CUB 6	X			600/5
620	CUB 7	X			600/5
613	CUB 8	X			600/5
STA SVC SS4	CUB 9	X			100/5
TIE BKR	CUB 10A	X			1200/5
STA SVC SS5	CUB 10B	X			100/5
616	CUB 11	X			600/5
604	CUB 12	X			600/5
607	CUB 13	X			600/5
SPARE	CUB 14	X			1200/5
608	CUB 15	X			600/5
606	CUB 16	X			600/5
CT5	CUB 17	X			1200/5
TS10	CUB 18	X	SCHEDULED TO BE INSTALLED UNDER PCN 98778 – RING BUS CONFIGURATION		1200/5

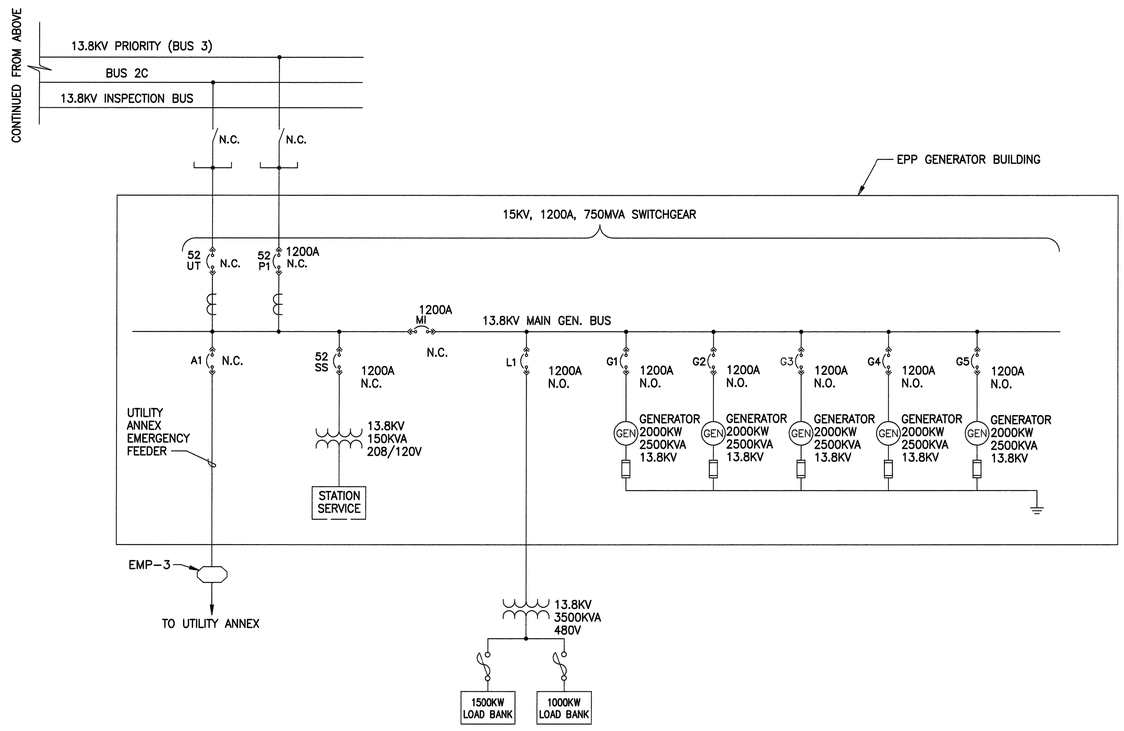

SPECIFIC NOTES

A. FOR LEGEND AND GENERAL NOTES, SEE DRAWING E1.

B. EXISTING OVERCURRENT RELAYS ASSOCIATED WITH THE "BOLDED" CIRCUIT BREAKER SYMBOLS SHALL BE REPLACED WITH SEL 751A OVERCURRENT RELAYS.

C L-21 SIGNIFIES LOW BOLTAGE (13.8KV) BAY 21.
H-15 SIGNIFIES HIGH VOLTAGE (115KV) BAY 15.

SYM.	ZONE	DESCRIPTION	DATE	APPROVED
		REVISIONS		

ENGINEER OF RECORD: LARRY JONES — PE LICENSE NO. 19537

Fred Wilson & Associates, Inc.
Consulting Engineers
C.A. NO. 7188 • 904-398-8636
3970 Hendricks Avenue • Jacksonville, FL 32207

SIGNATURES		DATE
DESIGNED	M. YUDIN	6/09
DRAWN	M. YUDIN	6/09
CHECKED	L. JONES	6/09
SUBMITTED	M. Yudin	9/24/09
APPROVED	L. Jones	9/24/09
APPROVED		
APPROVED		
APPROVED		
APPROVED		
APPROVED		

NATIONAL AERONAUTICS AND SPACE ADMINISTRATION
JOHN F. KENNEDY SPACE CENTER, NASA
KENNEDY SPACE CENTER, FLORIDA

REPLACE PROTECTIVE RELAYS AT C5, C5A AND ORSINO SUBSTATIONS WITH SEL RELAYS

C5 AND C5A 13.8KV SINGLE LINE DIAGRAM

FILE NO. | SIZE F | DWG. NO. 79K38612

PROJ. NO. PCN 98778 | SHEET 3

A/E FILE No. 0601\0601-25\0601-25.4
FILE: E2.DWG
THIS DRAWING PREPARED BY AutoCAD 2008

E2

NOTICE – WHEN GOVERNMENT DRAWINGS, SPECIFICATIONS, OR OTHER DATA ARE USED FOR ANY PURPOSE OTHER THAN IN CONNECTION WITH A DEFINITELY RELATED GOVERNMENT PROCUREMENT OPERATION, THE UNITED STATES GOVERNMENT THEREBY INCURS NO RESPONSIBILITY NOR ANY OBLIGATION WHATSOEVER; AND THAT THE GOVERNMENT MAY HAVE FORMULATED, FURNISHED, OR IN ANY WAY SUPPLIED THE SAME; NOR DOES PROPRIETARY INFORMATION OR OTHERWISE IS NOT TO BE REGARDED BY IMPLICATION OR OTHERWISE AS IN ANY MANNER LICENSING THE HOLDER OR ANY OTHER PERSON OR CORPORATION, OR CONVEYING ANY RIGHTS OR PERMISSION TO MANUFACTURE, USE, OR SELL ANY PATENTED INVENTION THAT MAY IN ANY WAY BE RELATED THERETO.

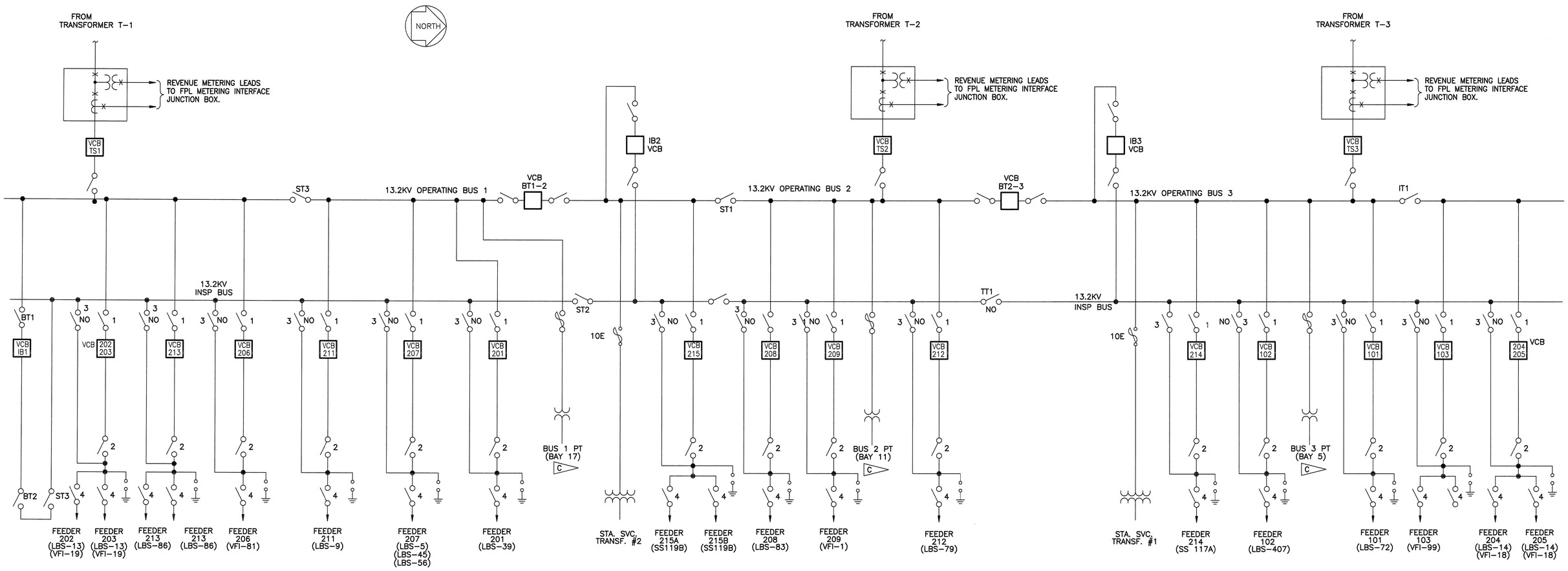

13.2KV ONE LINE DIAGRAM

ORSINO SUBSTATION – EXISTING PROTECTIVE RELAY CONFIGURATION

ORSINO SUBSTATION	PANEL	MMCO	KCGG	MICROSHIELD	CONN C.T. RATIO
FDR 101	5T	X			400/5
FDR 102	3T	X			200/5
FDR 103	3T	X			200/5
FDR 201	8	X			200/5
FDR 202/203	12	X			600/5
FDR 204/205	6T			X	600/5
FDR 206	9	X			400/5
FDR 207	8	X			300/5
FDR 208	3	X			300/5
FDR 209	3	X			300/5
FDR 211	9	X			300/5
FDR 212	1	X			400/5
FDR 213	11	X			600/5
FDR 214	4T			X	600/5
FDR 215	6	X			600/5
FDR IBI	12	X			600/5
TIE IB2	4			X	600/5
TIE IB3	6T			X	600/5
TIE BT1-2	5	X			1200/5
TIE BT2-3	1	X			1200/5
TS1	10			X	1200/5
TS2	2			X	1200/5
TS3	2T			X	1200/5
SPARE	5T	X			

SPECIFIC NOTES

A. FOR LEGEND AND GENERAL NOTES, SEE DRAWING E1.

B. EXISTING OVERCURRENT RELAYS ASSOCIATED WITH THE "BOLDED" CIRCUIT BREAKER SYMBOLS SHALL BE REPLACED WITH SEL 751A OVERCURRENT RELAYS.

SYM.	ZONE	DESCRIPTION	DATE	APPROVED

REVISIONS

ENGINEER OF RECORD: LARRY JONES — PE LICENSE NO. 19837

Fred Wilson & Associates, Inc.
Consulting Engineers
C.A. NO. 7188 • 904-398-8636
3970 Hendricks Avenue • Jacksonville, FL 32207

SIGNATURES		DATE
DESIGNED	L. JONES	6-09
DRAWN	B. GEMMELL	6-09
CHECKED	L. JONES	6-09
SUBMITTED		9/24/09
APPROVED		9/24/09
APPROVED		
APPROVED		
APPROVED		
APPROVED		
APPROVED		

NATIONAL AERONAUTICS AND SPACE ADMINISTRATION
JOHN F. KENNEDY SPACE CENTER, NASA
KENNEDY SPACE CENTER, FLORIDA

REPLACE PROTECTIVE RELAYS AT C5, C5A AND ORSINO SUBSTATIONS WITH SEL RELAYS

ORSINO SUBSTATION
13.2KV ONE LINE DIAGRAM

FILE NO. | SIZE F | DWG. NO. 79K38612

PROJ. NO. PCN 98778 | SHEET 4

A/E FILE No. 0601\0601-25\0601-25.4
FILE: E3.DWG
THIS DRAWING PREPARED BY AutoCAD 2008

E3

KSC FORM 1-11A (REV 6/91) (C/G 12/93)

09/18/2009 F:\ELEC\0601\0601-25\0601-25.4\E3

NOTICE – WHEN GOVERNMENT DRAWINGS, SPECIFICATIONS, OR OTHER DATA ARE USED FOR ANY PURPOSE OTHER THAN IN CONNECTION WITH A DEFINITELY RELATED GOVERNMENT PROCUREMENT OPERATION, THE UNITED STATES GOVERNMENT THEREBY INCURS NO RESPONSIBILITY NOR ANY OBLIGATION WHATSOEVER, AND THE FACT THAT THE GOVERNMENT MAY HAVE FORMULATED, FURNISHED, OR IN ANY WAY SUPPLIED THE SAID DRAWINGS, SPECIFICATIONS OR OTHER DATA IS NOT TO BE REGARDED BY IMPLICATION OR OTHERWISE IN ANY MANNER LICENSING THE HOLDER OR ANY OTHER PERSON OR CORPORATION, OR CONVEYING ANY RIGHTS OR PERMISSION TO MANUFACTURE, USE, OR SELL ANY PATENTED INVENTION THAT MAY IN ANY WAY BE RELATED THERETO.

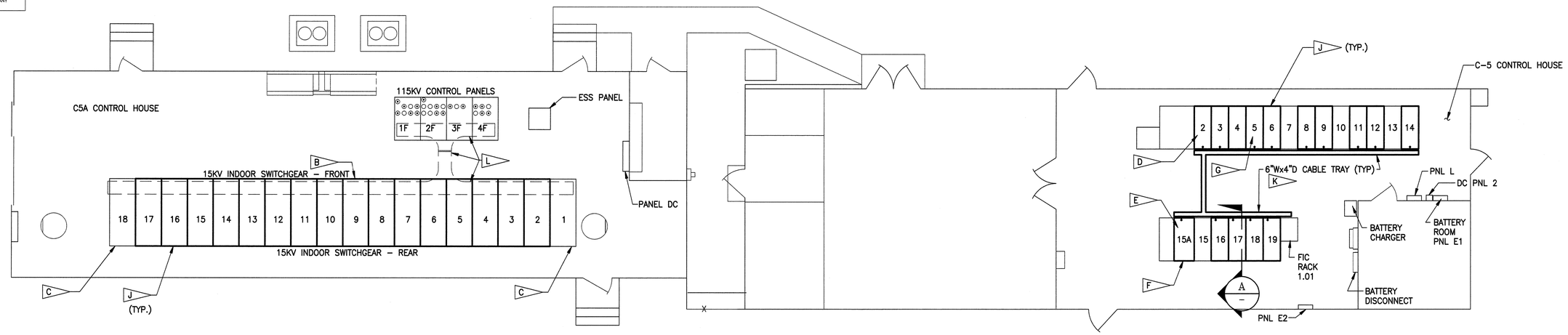

C5/C5A CONTROL BUILDINGS

SCALE 3/16" = 1'-0"

NORTH

SPECIFIC NOTES

A. FOR LEGEND AND GENERAL NOTES, SEE DRAWING E1.

B. INSTALL TWO (2) SEL 2032 COMMUNICATIONS PROCESSORS AND ASSOCIATED EQUIPMENT ON THE UPPER COMPARTMENT DOOR OF CUBICLE 9 OF THE C5A 13.8KV SWITCHGEAR. SEE SHEET E25 FOR EQUIPMENT LAYOUT DETAILS.

C. EXISTING OVERCURRENT RELAYS LOCATED IN C5A 13.8KV CUB. NOS. 1 AND 18 ARE TO BE REPLACED UNDER "MODIFY C-5 SUBSTATION FOR RING BUS CONFIGURATION".

D. REMOVE AND REPLACE EXISTING PANEL 2 DOOR. SEE SHEET E25 FOR NEW EQUIPMENT LAYOUT. PROVIDE ONE (1) ADDITIONAL SEL 2032 COMMUNICATIONS PROCESSOR AND ASSOCIATED EQUIPMENT. EXISTING PANEL-MOUNTED EQUIPMENT IS TO BE RE-INSTALLED AS INDICATED.

E. REMOVE AND REPLACE EXISTING 15A PANEL DOOR WITH EQUIPMENT AS SHOWN ON SHEET E25. PROVIDE THREE (3) SEL 587Z BUS DIFFERENTIAL RELAYS AND EQUIPMENT AS INDICATED.

F. REMOVE EXISTING 13.8KV BUS DIFFERENTIAL RELAYS ON THE REAR OF PANEL 15A. PROVIDE REAR ALUMINUM COVER PLATE PAINTED TO MATCH EXISTING PANEL FINISH. LOCKOUT RELAYS ARE TO REMAIN. SEE SHEET E25.

G. EXISTING TP8 OVERCURRENT RELAY MOUNTED IN PANEL 5 IS SCHEDULED TO BE REPLACED AND RECONNECTED TO TS8 CT'S UNDER "MODIFY C-5 SUBSTATION FOR RING BUS CONFIGURATION".

H. FURNISH AND INSTALL ONE NEW SEL 2032 COMMUNICATIONS PROCESSOR AND ASSOCIATED EQUIPMENT IN PANEL 7T AT ORSINO. SEE SHEET E27 FOR DETAILS. (THE CONTRACTOR SHALL DISCONNECT AND REMOVE THE SUBSTATION FAULT RECORDER EQUIPMENT, UNUSED RACK UNITS AND ALL OF THE ASSOCIATED CABLING PRIOR TO INSTALLING THE SECOND SEL2032 AND THE ASSOCIATED NETWORK INTERFACE EQUIPMENT).

J. BOLDED PANEL LOCATIONS INDICATE WHERE EXISTING OVERCURRENT RELAYS ARE TO BE REPLACED AND WHERE NEW RELAYS ARE TO BE INSTALLED.

K. PROVIDE 6" WIDE X 4" DEEP, NEMA VE-1, STEEL, SOLID BOTTOM, OVERHEAD CABLE TRAY AND COVER IN LOCATIONS SHOWN. PROVIDE ALL MOUNTING HARDWARE FOR SUPPORT OF THE TRAY FROM BUILDING ROOF TRUSS SYSTEM AT EACH TRUSS LOCATION ALONG THE RUN OF THE TRAY. PROVIDE 1" FLEX CONDUIT AND FITTINGS REQUIRED FOR COMMUNICATIONS CABLE DROPS TO THE CONTROL PANELS. SEE CABLE TRAY SUPPORT DETAIL.

L. EXISTING CABLE TRAY SYSTEM MOUNTED ABOVE THE 115KV CONTROL PANELS AND ON TOP OF THE 15KV SWITCHGEAR. THE CABLE TRAY SHALL BE USED TO ROUTE SEL C273A COM CABLES BETWEEN THE NEW SEL RELAYS INSTALLED IN EACH CUBICLE, AND THE COMMUNICATIONS PROCESSORS TO BE PROVIDED IN THE SWITCHGEAR CUBICLE 9A. SEE E26 FOR DETAILS.

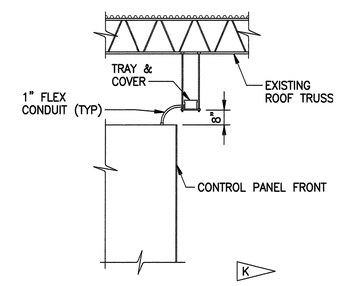

CABLE TRAY SUPPORT DETAIL

NOT TO SCALE

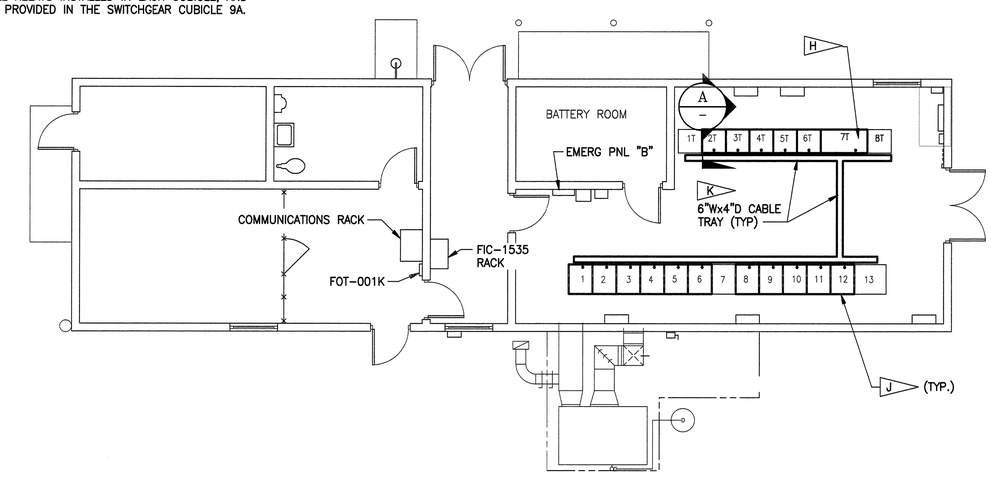

ORSINO CONTROL BUILDING

SCALE 3/16" = 1'-0"

NORTH

GRAPHIC SCALE

3/16" = 1'-0" 8' 4' 0' 8' 16'

SYM.	ZONE	DESCRIPTION	DATE	APPROVED
		REVISIONS		

ENGINEER OF RECORD: LARRY JONES — PE LICENSE NO. 19837

Fred Wilson & Associates, Inc. Consulting Engineers
C.A. NO. 7188 • 904-398-8636
3970 Hendricks Avenue • Jacksonville, FL 32207

SIGNATURES		DATE
DESIGNED	M. YUDIN	6/09
DRAWN	B. GEMMELL	6/09
CHECKED	L. JONES	6/09
SUBMITTED		9/24/09
APPROVED		9/24/09
APPROVED		
APPROVED		
APPROVED		
APPROVED		
APPROVED		

NATIONAL AERONAUTICS AND SPACE ADMINISTRATION
JOHN F. KENNEDY SPACE CENTER, NASA
KENNEDY SPACE CENTER, FLORIDA

REPLACE PROTECTIVE RELAYS AT C5, C5A AND ORSINO SUBSTATIONS WITH SEL RELAYS

CONTROL BUILDING PANEL LOCATIONS

A/E FILE No. 0601\0601-25\0601-25.4
FILE: E4.DWG
THIS DRAWING PREPARED BY AutoCAD 2005

E4

FILE NO. | SIZE F | DWG. NO. 79K38612

PROJ. NO. PCN 98778 | SHEET 5

NOTICE — WHEN GOVERNMENT DRAWINGS, SPECIFICATIONS, OR OTHER DATA ARE USED FOR ANY PURPOSE OTHER THAN IN CONNECTION WITH A DEFINITELY RELATED GOVERNMENT PROCUREMENT OPERATION, THE UNITED STATES GOVERNMENT THEREBY INCURS NO RESPONSIBILITY NOR ANY OBLIGATION WHATSOEVER; AND THE FACT THAT THE GOVERNMENT MAY HAVE FORMULATED, FURNISHED, OR IN ANY WAY SUPPLIED THE SAID DRAWINGS, SPECIFICATIONS OR OTHER DATA IS NOT TO BE REGARDED BY IMPLICATION OR OTHERWISE IN ANY MANNER LICENSING THE HOLDER OR ANY OTHER PERSON OR CORPORATION, OR CONVEYING ANY RIGHTS OR PERMISSION TO MANUFACTURE, USE, OR SELL ANY PATENTED INVENTION THAT MAY IN ANY WAY BE RELATED THERETO.

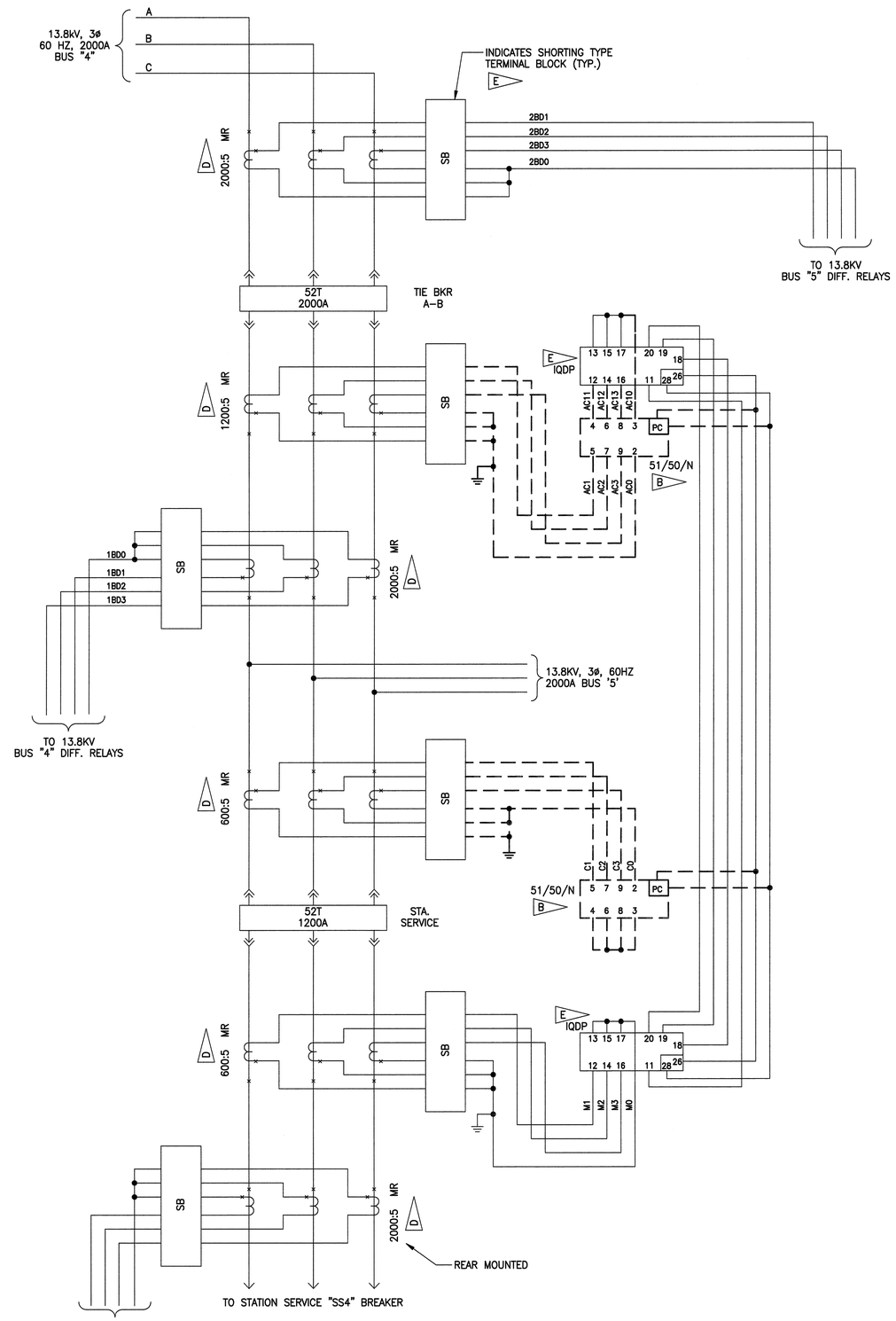

EXISTING AC SCHEMATIC FOR 13.8KV BUS TIE, STATION SERVICE & CABLE TIE BREAKERS

(13.8KV BUS 4 SHOWN, BUS 5 SIMILAR)

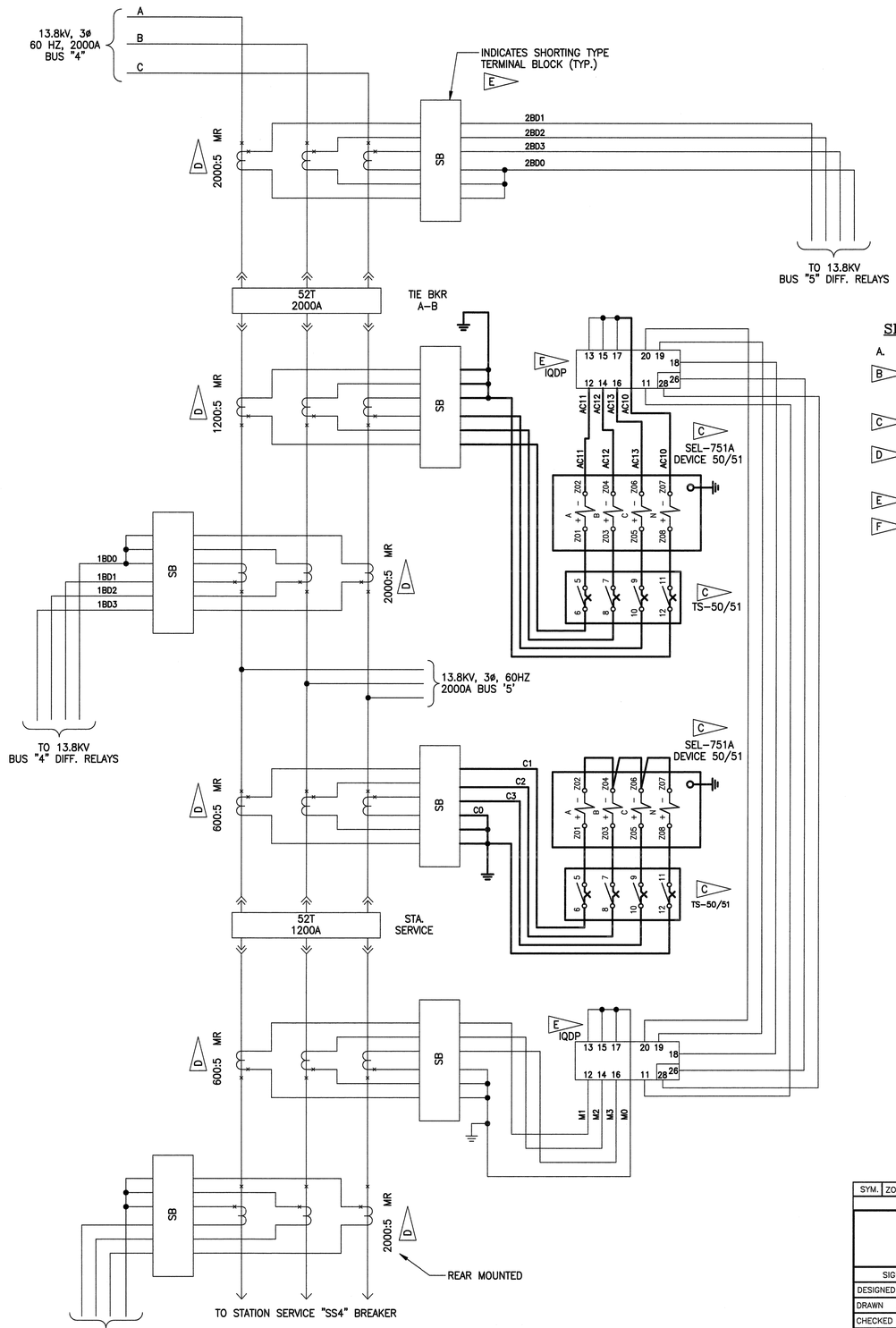

MODIFIED AC SCHEMATIC FOR 13.8KV BUS TIE, STATION SERVICE & CABLE TIE BREAKERS

(13.8KV BUS 4 SHOWN, BUS 5 SIMILAR)

SPECIFIC NOTES

A. FOR LEGEND AND GENERAL NOTES, SEE DRAWING E1.

B. REMOVE EXISTING OVERCURRENT RELAYS IN BREAKER CUBICLES. CONNECTIONS SHOWN ARE TYPICAL FOR ALL BUS TIE, STATION SERVICE AND CABLE TIE BREAKERS.

C. PROVIDE SCHWEITZER SEL–751A RELAYS AND TEST SWITCHES IN BREAKER CUBICLES.

D. CONNECTED CT RATIOS FOR OVERCURRENT RELAYS VARY DEPENDING ON THE CIRCUIT. SEE DRAWING E2 FOR THE EXISTING RELAY TYPES AND CONNECTED CT RATIOS.

E. EXISTING EQUIPMENT TO REMAIN.

F. BUS TIE AND STATION SERVICE 5 BREAKERS ARE INSTALLED IN CUBICLES 10A AND 10B RESPECTIVELY. STATION SERVICE 4 BREAKER IS INSTALLED IN CUBICLE 9B. CABLE TIE BREAKERS CT4 AND CT5 ARE INSTALLED IN CUBICLE 2B AND 17B RESPECTIVELY.

SYM.	ZONE	DESCRIPTION	DATE	APPROVED
		REVISIONS		

ENGINEER OF RECORD: LARRY JONES — PE LICENSE NO. 19837

Fred Wilson & Associates, Inc.
Consulting Engineers
C.A. NO. 7188 • 904-398-8636
3970 Hendricks Avenue • Jacksonville, FL 32207

SIGNATURES		DATE
DESIGNED	M. YUDIN	6/09
DRAWN	A. THOMPSON	6/09
CHECKED	L. JONES	6/09
SUBMITTED		9/24/09
APPROVED		9/24/09
APPROVED		
APPROVED		
APPROVED		
APPROVED		
APPROVED		

NATIONAL AERONAUTICS AND SPACE ADMINISTRATION
JOHN F. KENNEDY SPACE CENTER, NASA
KENNEDY SPACE CENTER, FLORIDA

REPLACE PROTECTIVE RELAYS AT C5, C5A AND ORSINO SUBSTATIONS WITH SEL RELAYS

TYPICAL BUS TIE, STATION SERVICE & CABLE TIE BREAKERS A.C. SCHEMATIC C5A SUBSTATION

FILE NO. | SIZE F | DWG. NO. 79K38612

PROJ. NO. PCN 98778 | SHEET 6

A/E FILE No. 0601\0601–25\0601–25.4
FILE: E5.DWG
THIS DRAWING PREPARED BY AutoCAD 2008

E5

NOTICE – WHEN GOVERNMENT DRAWINGS, SPECIFICATIONS, OR OTHER DATA ARE USED FOR ANY PURPOSE OTHER THAN IN CONNECTION WITH A DEFINITELY RELATED GOVERNMENT PROCUREMENT OPERATION, THE UNITED STATES GOVERNMENT THEREBY INCURS NO RESPONSIBILITY NOR ANY OBLIGATION WHATSOEVER; AND THE FACT THAT THE GOVERNMENT MAY HAVE FORMULATED, FURNISHED, OR IN ANY WAY SUPPLIED THE SAID DRAWINGS, SPECIFICATIONS, OR OTHER DATA IS NOT TO BE REGARDED BY IMPLICATION OR OTHERWISE IN ANY MANNER LICENSING THE HOLDER OR ANY OTHER PERSON OR CORPORATION, OR CONVEYING ANY RIGHTS OR PERMISSION TO MANUFACTURE, USE, OR SELL ANY PATENTED INVENTION THAT MAY IN ANY WAY BE RELATED THERETO.

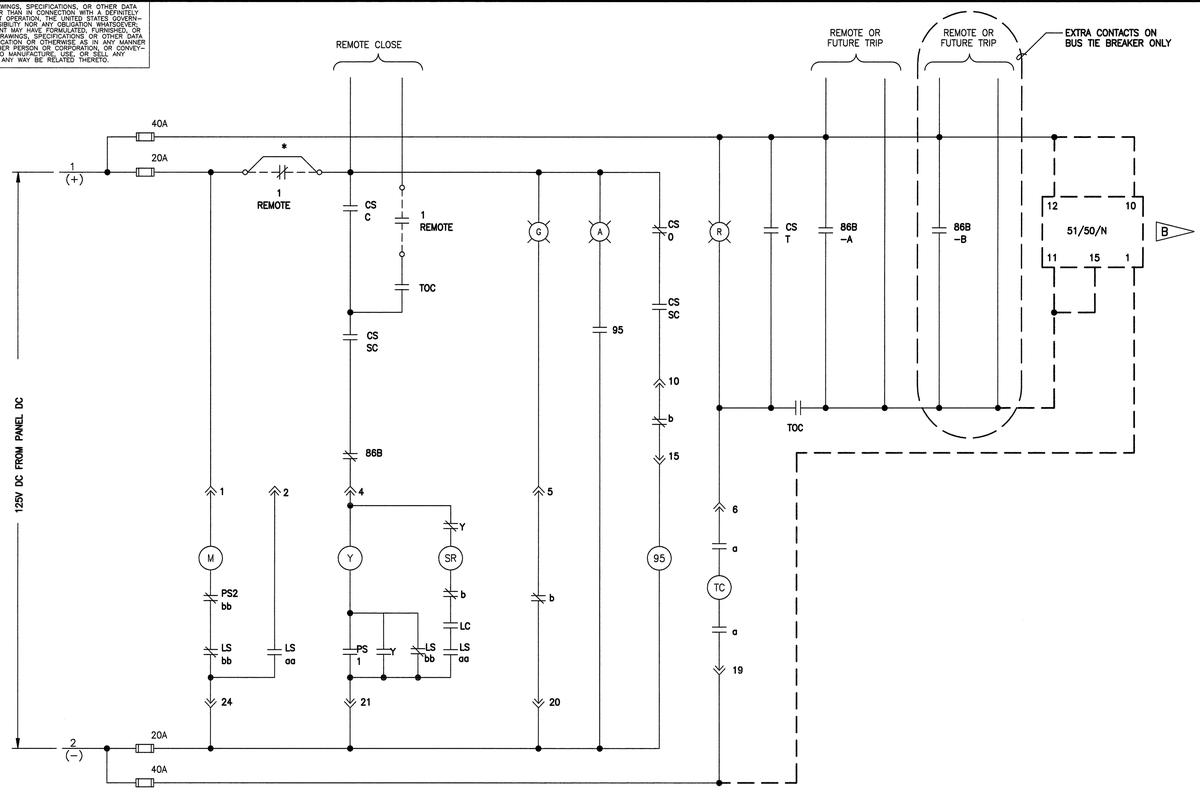

EXISTING 125VDC CONTROL SCHEMATIC

FOR 13.8kV BUS TIE, STATION SERVICE BREAKERS (SS4 & SS5) AND CABLE TIE BREAKERS (CT4 & CT5)

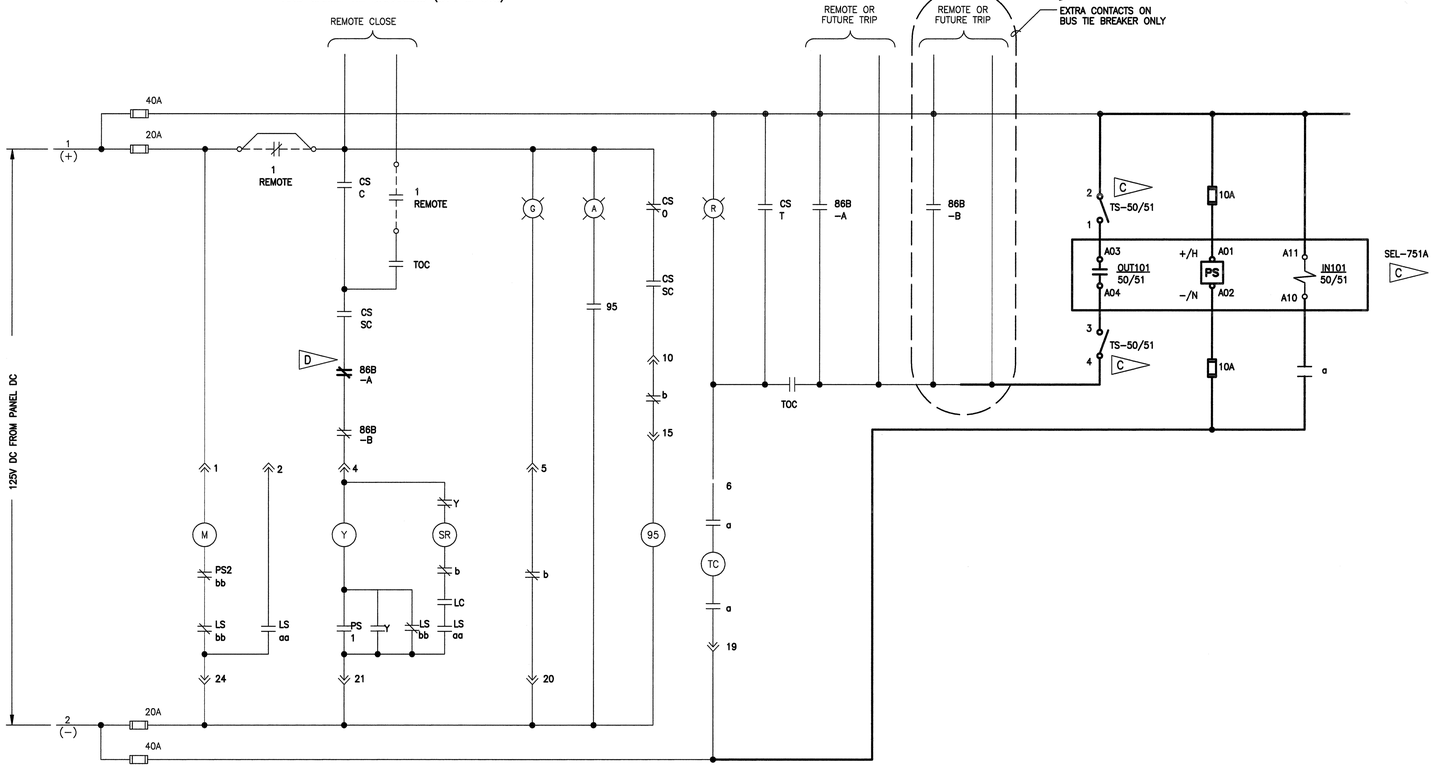

MODIFIED 125VDC CONTROL SCHEMATIC

FOR 13.8kV BUS TIE, STATION SERVICE BREAKERS (SS4 & SS5) AND CABLE TIE BREAKERS (CT4 & CT5)

SPECIFIC NOTES

A. FOR LEGEND AND GENERAL NOTES, SEE DRAWING E1.

B. REMOVE EXISTING OVERCURRENT RELAYS IN BREAKER CUBICLES. CONNECTIONS SHOWN ARE TYPICAL FOR BUS TIE, STATION SERVICE AND CABLE TIE BREAKERS.

C. PROVIDE SCHWEITZER SEL-751A RELAYS AND TEST SWITCHES IN BREAKER CUBICLES INDICATED ON THE SINGLE LINE DIAGRAMS.

D. ADDITIONAL 86B CONTACTS ARE INSTALLED IN THE BUS TIE BREAKER CIRCUIT ONLY. STATION SERVICE AND CABLE TIE BREAKER CUBICLES CONTAIN 86B CONTACTS ASSOCIATED WITH ITS RESPECTIVE BUS DIFFERENTIAL RELAYING.

SYM.	ZONE	DESCRIPTION	DATE	APPROVED
		REVISIONS		

ENGINEER OF RECORD: LARRY JONES — PE LICENSE NO. 19837

Fred Wilson & Associates, Inc.
Consulting Engineers
C.A. NO. 7188 • 904-398-8636
3970 Hendricks Avenue • Jacksonville, FL 32207

SIGNATURES		DATE
DESIGNED	M. YUDIN	6/09
DRAWN	A. THOMPSON	6/09
CHECKED	L. JONES	6/09
SUBMITTED		9/24/09
APPROVED		9/24/09
APPROVED		
APPROVED		
APPROVED		
APPROVED		
APPROVED		

NATIONAL AERONAUTICS AND SPACE ADMINISTRATION
JOHN F. KENNEDY SPACE CENTER, NASA
KENNEDY SPACE CENTER, FLORIDA

REPLACE PROTECTIVE RELAYS AT C5, C5A AND ORSINO SUBSTATIONS WITH SEL RELAYS

TYPICAL BUS TIE, STATION SERVICE & CABLE TIE BREAKERS D.C. SCHEMATIC C5A SUBSTATION

FILE NO. | SIZE F | DWG. NO. 79K38612

PROJ. NO. PCN 98778 | SHEET 7

A/E FILE No. 0601\0601-25\0601-25.4
FILE: E6.DWG
THIS DRAWING PREPARED BY AutoCAD 2008

E6

KSC FORM 1-11A (REV 6/91) (C/G 12/93) | 09/18/2009 | F:\ELECT\0601\0601-25\0601-25.4\E6

NOTICE – WHEN GOVERNMENT DRAWINGS, SPECIFICATIONS, OR OTHER DATA ARE USED FOR ANY PURPOSE OTHER THAN IN CONNECTION WITH A DEFINITELY RELATED GOVERNMENT PROCUREMENT OPERATION, THE UNITED STATES GOVERNMENT THEREBY INCURS NO RESPONSIBILITY NOR ANY OBLIGATION WHATSOEVER; AND THE FACT THAT THE GOVERNMENT MAY HAVE FORMULATED, FURNISHED, OR IN ANY WAY SUPPLIED THE SAID DRAWINGS, SPECIFICATIONS, OR OTHER DATA IS NOT TO BE REGARDED BY IMPLICATION OR OTHERWISE AS IN ANY MANNER LICENSING THE HOLDER OR ANY OTHER PERSON OR CORPORATION, OR CONVEYING ANY RIGHTS OR PERMISSION TO MANUFACTURE, USE, OR SELL ANY PATENTED INVENTION THAT MAY IN ANY WAY BE RELATED THERETO.

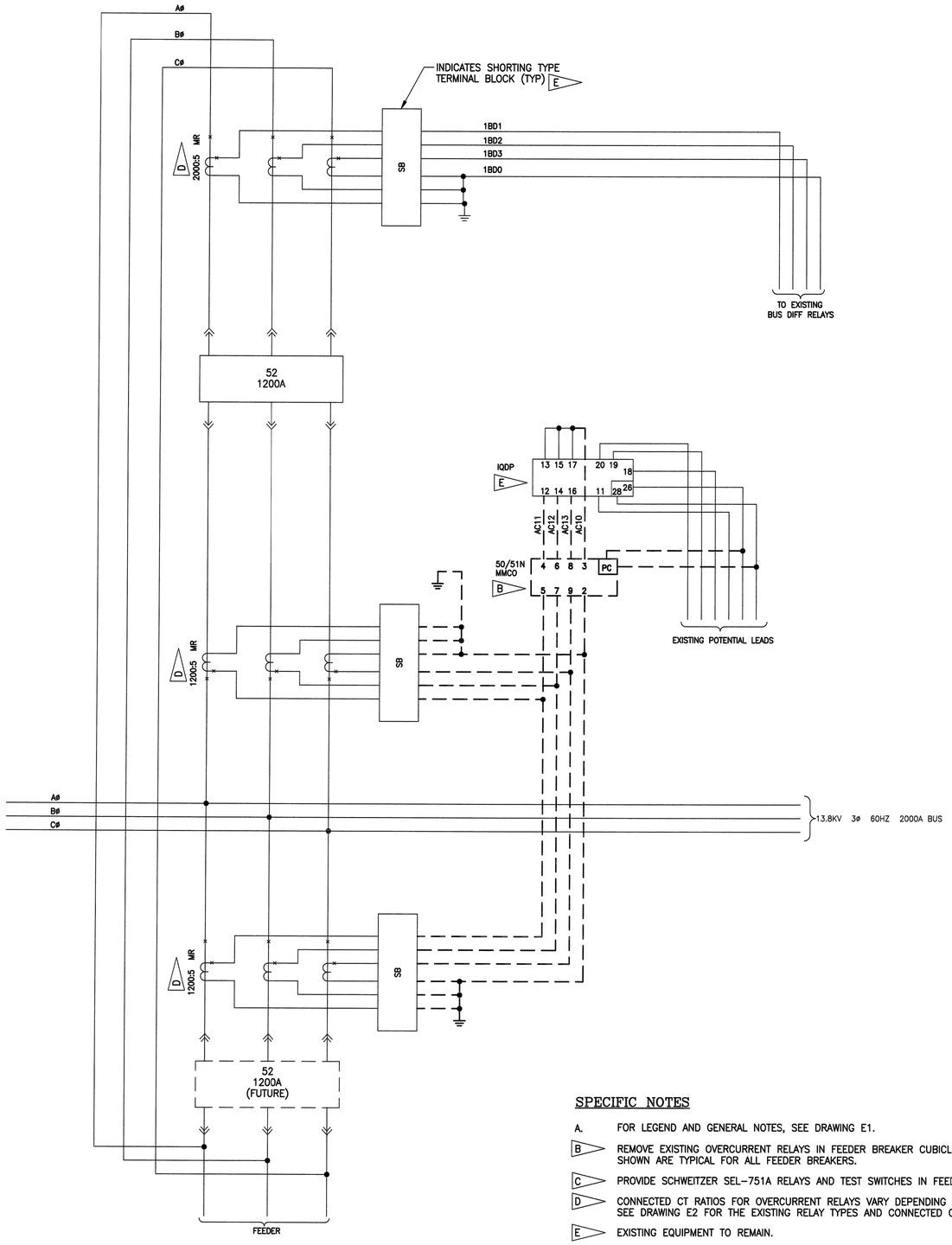

EXISTING A.C. SCHEMATIC FOR 13.8KV FEEDER BREAKERS

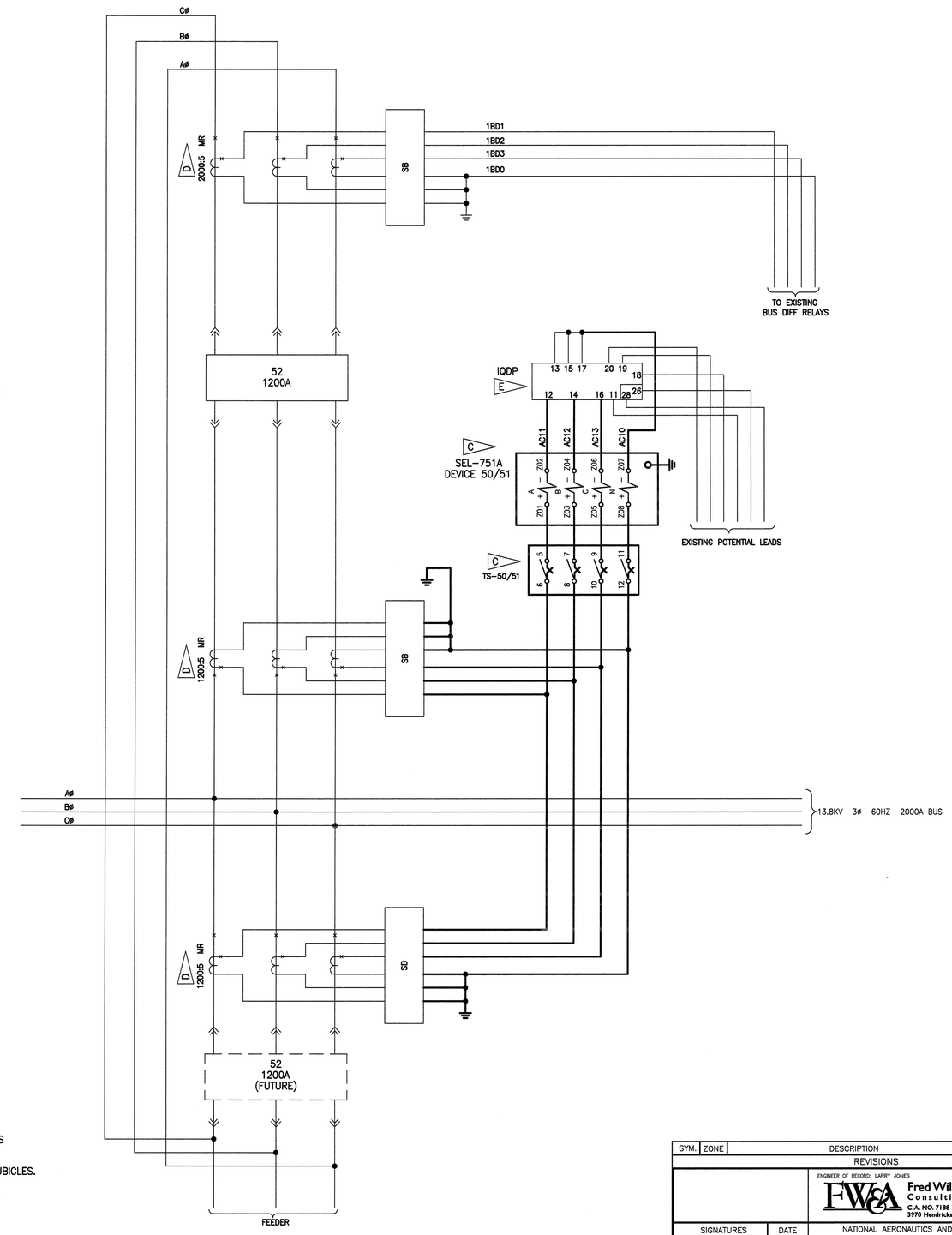

MODIFIED A.C. SCHEMATIC FOR 13.8KV FEEDER BREAKERS

SPECIFIC NOTES

A. FOR LEGEND AND GENERAL NOTES, SEE DRAWING E1.

B. REMOVE EXISTING OVERCURRENT RELAYS IN FEEDER BREAKER CUBICLES. CONNECTIONS SHOWN ARE TYPICAL FOR ALL FEEDER BREAKERS.

C. PROVIDE SCHWEITZER SEL-751A RELAYS AND TEST SWITCHES IN FEEDER BREAKER CUBICLES.

D. CONNECTED CT RATIOS FOR OVERCURRENT RELAYS VARY DEPENDING ON THE CIRCUIT. SEE DRAWING E2 FOR THE EXISTING RELAY TYPES AND CONNECTED CT RATIOS.

E. EXISTING EQUIPMENT TO REMAIN.

SYM.	ZONE	DESCRIPTION	DATE	APPROVED
		REVISIONS		

ENGINEER OF RECORD: LARRY JONES — PE LICENSE NO. 19837

Fred Wilson & Associates, Inc. Consulting Engineers
C.A. NO. 7188 • 904-398-8636
3970 Hendricks Avenue • Jacksonville, FL 32207

SIGNATURES	DATE
DESIGNED M. YUDIN	6/09
DRAWN A. THOMPSON	6/09
CHECKED L. JONES	6/09
SUBMITTED	9/24/09
APPROVED	9/24/09
APPROVED	
APPROVED	
APPROVED	
APPROVED	
APPROVED	

NATIONAL AERONAUTICS AND SPACE ADMINISTRATION
JOHN F. KENNEDY SPACE CENTER, NASA
KENNEDY SPACE CENTER, FLORIDA

REPLACE PROTECTIVE RELAYS AT C5, C5A AND ORSINO SUBSTATIONS WITH SEL RELAYS

TYPICAL FEEDER BREAKER A.C. SCHEMATIC C5A SUBSTATION

A/E FILE No. 0601\0601-25\0601-25.4
FILE: E7.DWG
THIS DRAWING PREPARED BY AutoCAD 2008

E7

FILE NO. | SIZE F | DWG. NO. 79K38612

PROJ. NO. PCN 98778 | SHEET 8

NOTICE – WHEN GOVERNMENT DRAWINGS, SPECIFICATIONS, OR OTHER DATA ARE USED FOR ANY PURPOSE OTHER THAN IN CONNECTION WITH A DEFINITELY RELATED GOVERNMENT PROCUREMENT OPERATION, THE UNITED STATES GOVERNMENT THEREBY INCURS NO RESPONSIBILITY NOR ANY OBLIGATION WHATSOEVER; AND THE FACT THAT THE GOVERNMENT MAY HAVE FORMULATED, FURNISHED, OR IN ANY WAY SUPPLIED THE SAID DRAWINGS, SPECIFICATIONS OR OTHER DATA IS NOT TO BE REGARDED BY IMPLICATION OR OTHERWISE IN ANY MANNER LICENSING THE HOLDER OR ANY OTHER PERSON OR CORPORATION, OR CONVEYING ANY RIGHTS OR PERMISSION TO MANUFACTURE, USE, OR SELL ANY PATENTED INVENTION THAT MAY IN ANY WAY BE RELATED THERETO.

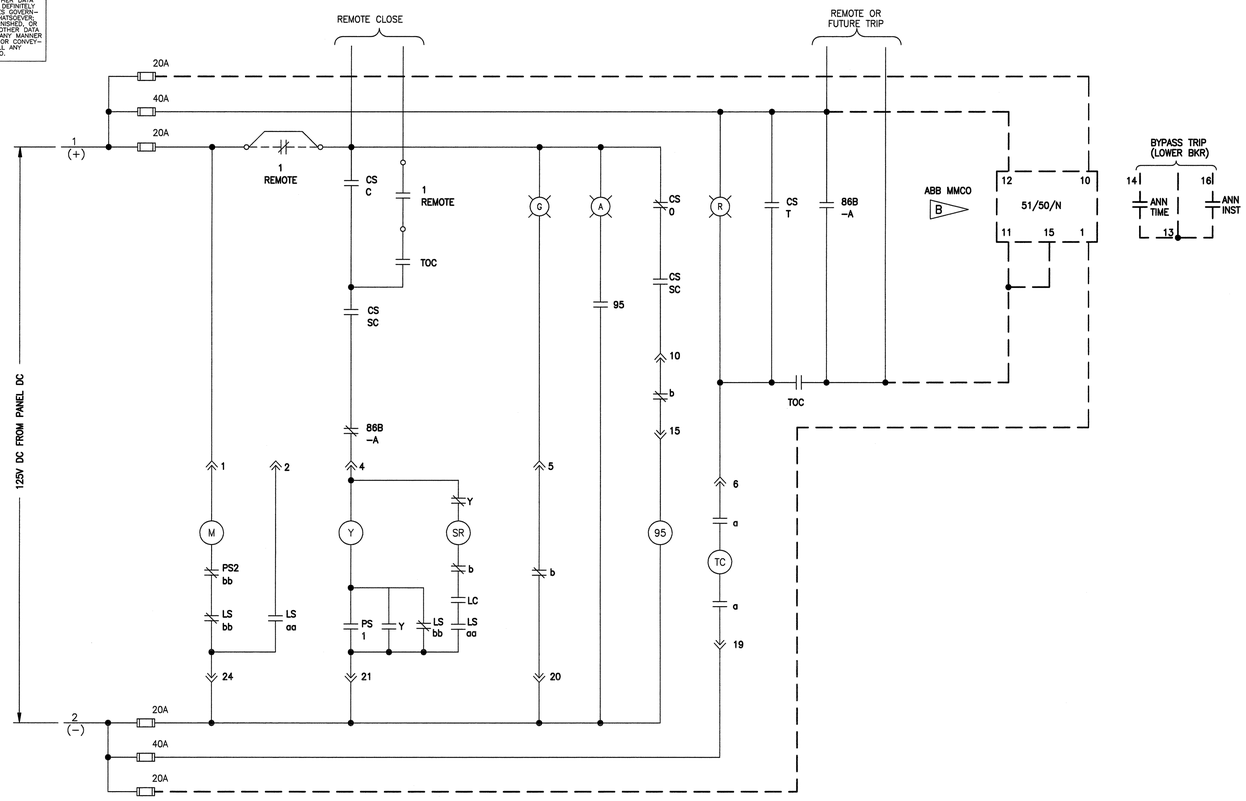

EXISTING 125VDC CONTROL SCHEMATIC
FOR 13.8kV FEEDER BREAKER 517

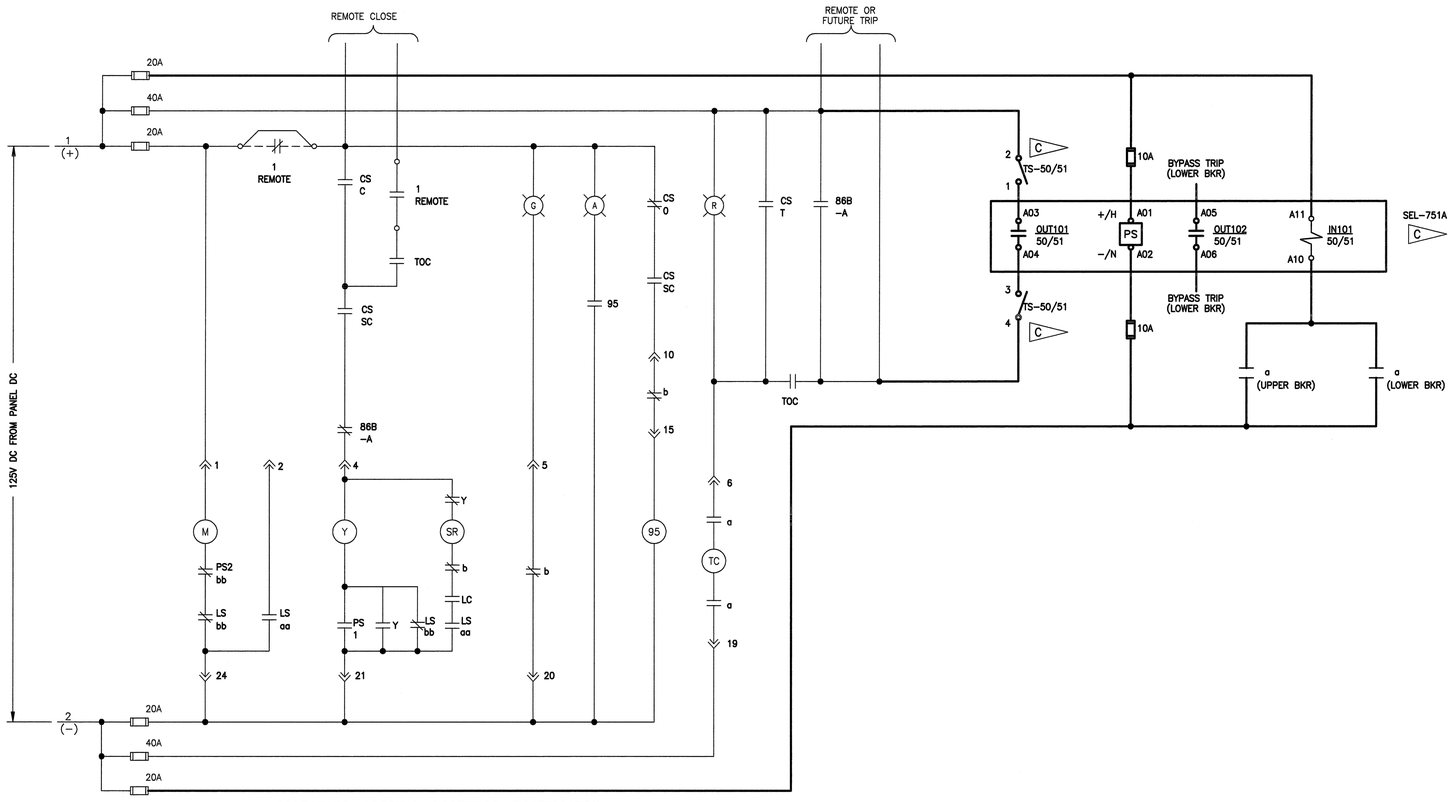

MODIFIED 125VDC CONTROL SCHEMATIC
FOR 13.8kV FEEDER BREAKER 517

SPECIFIC NOTES

A. FOR LEGEND AND GENERAL NOTES, SEE DRAWING E1.

B. REMOVE EXISTING OVERCURRENT RELAYS IN FEEDER BREAKER CUBICLES. CONNECTIONS SHOWN ARE TYPICAL FOR ALL FEEDER BREAKERS.

C. PROVIDE SCHWEITZER SEL–751A RELAYS AND TEST SWITCHES IN FEEDER BREAKER CUBICLES INDICATED ON THE SINGLE LINE DIAGRAMS.

SYM.	ZONE	DESCRIPTION	DATE	APPROVED
		REVISIONS		

ENGINEER OF RECORD: LARRY JONES — PE LICENSE NO. 19837

Fred Wilson & Associates, Inc.
Consulting Engineers
C.A. NO. 7188 • 904-398-8636
3970 Hendricks Avenue • Jacksonville, FL 32207

SIGNATURES		DATE
DESIGNED	M. YUDIN	6/09
DRAWN	A. THOMPSON	6/09
CHECKED	L. JONES	6/09
SUBMITTED		9/24/09
APPROVED		9/24/09
APPROVED		
APPROVED		
APPROVED		
APPROVED		
APPROVED		

NATIONAL AERONAUTICS AND SPACE ADMINISTRATION
JOHN F. KENNEDY SPACE CENTER, NASA
KENNEDY SPACE CENTER, FLORIDA

REPLACE PROTECTIVE RELAYS AT C5, C5A AND ORSINO SUBSTATIONS WITH SEL RELAYS

TYPICAL FEEDER BREAKER D.C. SCHEMATIC C5A SUBSTATION

FILE NO.	SIZE	DWG. NO.
	F	79K38612
PROJ. NO. PCN 98778		SHEET 9

A/E FILE No. 0601\0601–25\0601–25.4
FILE: EB.DWG
THIS DRAWING PREPARED BY AutoCAD 2008

E8

NOTICE — WHEN GOVERNMENT DRAWINGS, SPECIFICATIONS, OR OTHER DATA ARE USED FOR ANY PURPOSE OTHER THAN IN CONNECTION WITH A DEFINITELY RELATED GOVERNMENT PROCUREMENT OPERATION, THE UNITED STATES GOVERNMENT THEREBY INCURS NO RESPONSIBILITY NOR ANY OBLIGATION WHATSOEVER; AND THE FACT THAT THE GOVERNMENT MAY HAVE FORMULATED, FURNISHED, OR IN ANY WAY SUPPLIED THE SAID DRAWINGS, SPECIFICATIONS, OR OTHER DATA IS NOT TO BE REGARDED BY IMPLICATION OR OTHERWISE AS IN ANY MANNER LICENSING THE HOLDER OR ANY OTHER PERSON OR CORPORATION, OR CONVEYING ANY RIGHTS OR PERMISSION TO MANUFACTURE, USE OR SELL ANY PATENTED INVENTION THAT MAY IN ANY WAY BE RELATED THERETO.

SPECIFIC NOTES:

A. FOR LEGEND AND GENERAL NOTES, SEE DRAWING E1.

B. REMOVE EXISTING OVERCURRENT RELAYS IN INSPECTION BUS CONTROL PANELS. CONNECTIONS SHOWN ARE "TYPICAL" FOR ALL INSPECTION BUS FEEDER BREAKERS.

C. FURNISH AND INSTALL NEW SEL 751A RELAYS AND ASSOCIATED TEST SWITCHES IN ALL INSPECTION BUS PANEL POSITIONS INDICATED ON THE SINGLE LINE DIAGRAMS.

D. CT RATIOS SHOWN FOR OVERCURRENT RELAYS VARY DEPENDING ON THE CIRCUIT. SEE SHEET E2 FOR THE EXISTING RELAY TYPES AND CT RATIOS USED.

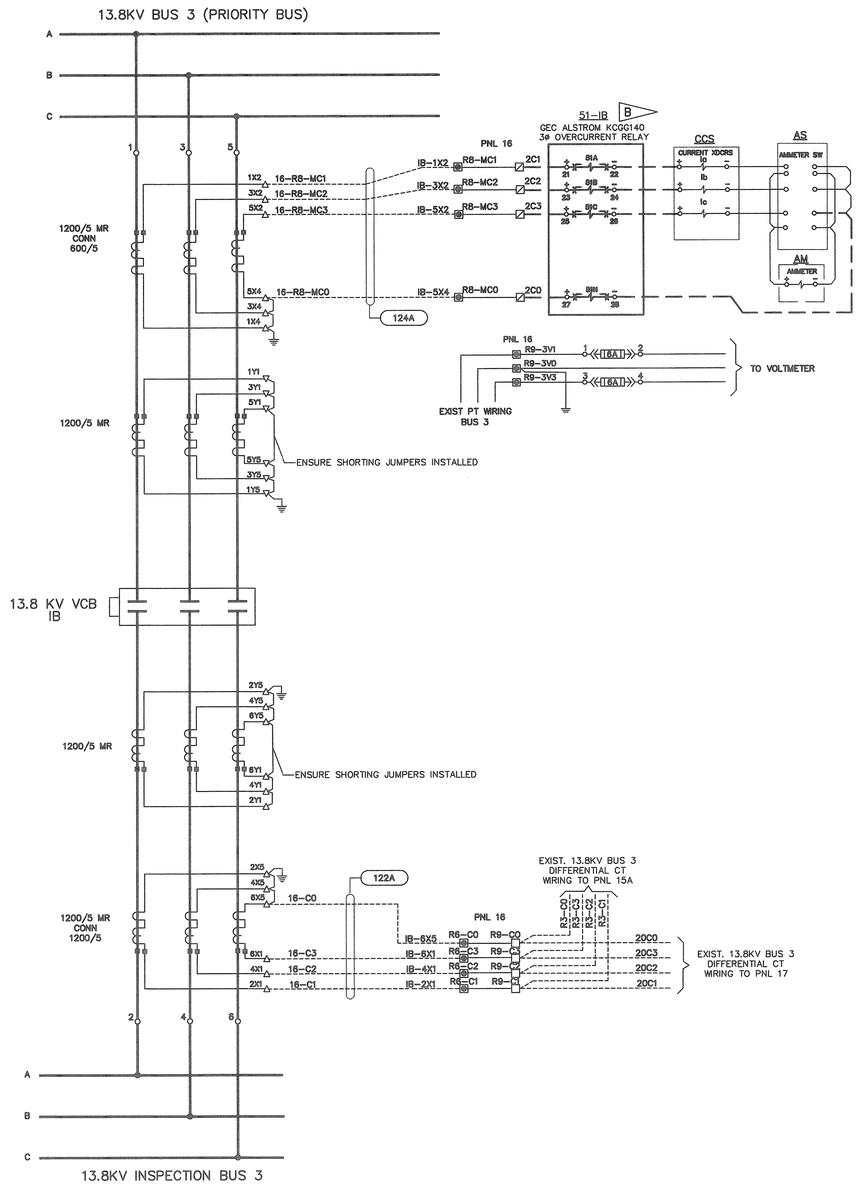

EXISTING AC SCHEMATIC

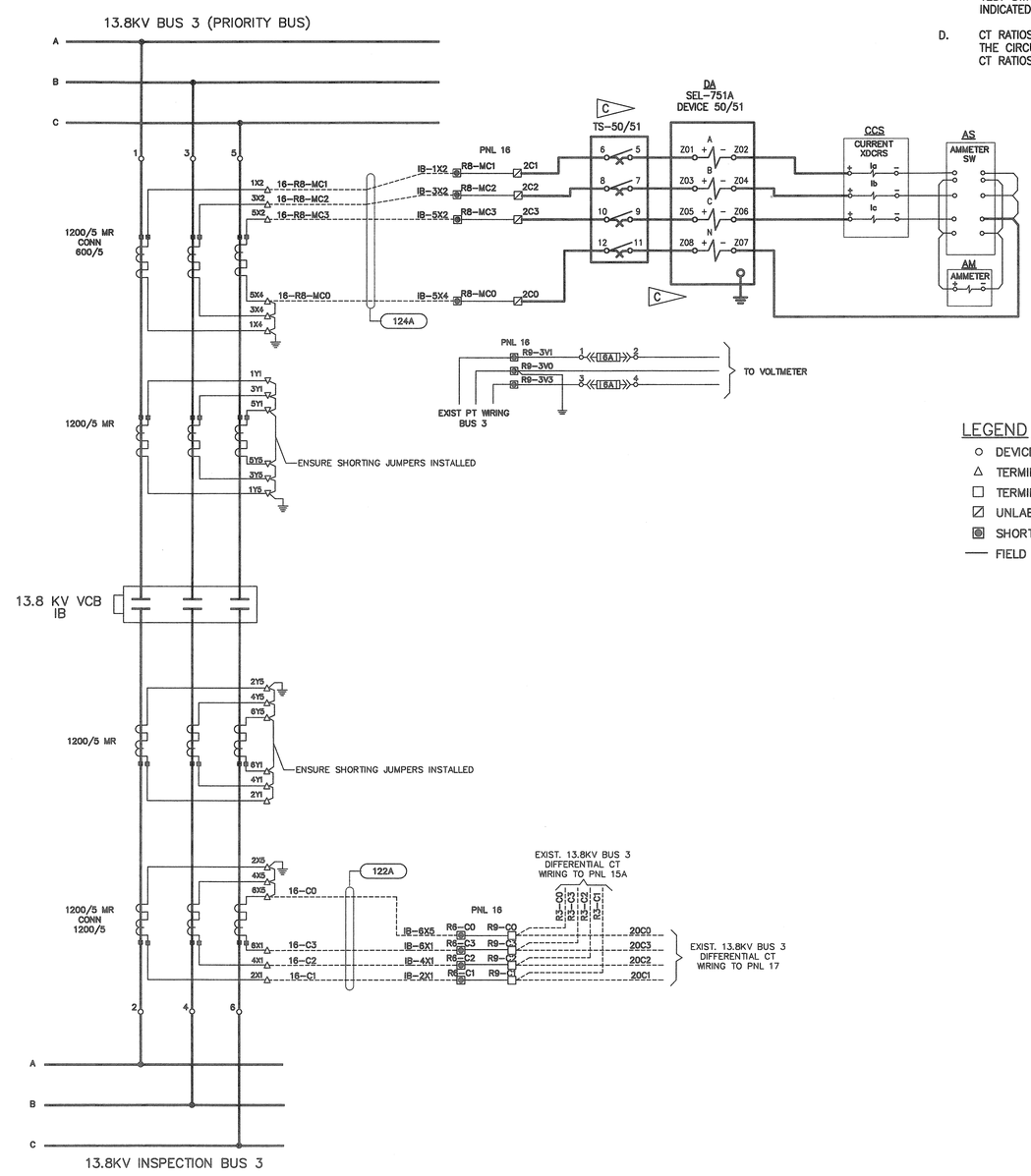

MODIFIED AC SCHEMATIC

LEGEND

- ○ DEVICE TERMINAL POINT
- △ TERMINAL BLOCK POINTS FOR CTs AT VCBs
- □ TERMINAL BLOCK AT CONTROL PNL 16
- ▨ UNLABELED TERMINAL BLOCK AT CONTROL PNL 16
- ◉ SHORTING TYPE TERMINAL BLOCK AT CONTROL PNL 16
- — FIELD WIRING

1200/5 BUSHING C.T.		
RATIO	TURNS	TAPS
100/5	20	X2–X3
200/5	40	X1–X2
300/5	60	X1–X3
400/5	80	X4–X5
500/5	100	X3–X4
600/5	120	X2–X4
800/5	160	X1–X4
900/5	180	X3–X5
1000/5	200	X2–X5
1200/5	240	X1–X5

SYM.	ZONE	DESCRIPTION	DATE	APPROVED

REVISIONS

ENGINEER OF RECORD: LARRY JONES — PE LICENSE NO. 19837

Fred Wilson & Associates, Inc.
Consulting Engineers
C.A. NO. 7188 • 904-398-8636
3970 Hendricks Avenue • Jacksonville, FL 32207

SIGNATURES		DATE
DESIGNED	L. JONES	6-09
DRAWN	B. GEMMELL	6-09
CHECKED	L. JONES	6-09
SUBMITTED		9/24/09
APPROVED		9/24/09
APPROVED		
APPROVED		
APPROVED		
APPROVED		
APPROVED		

NATIONAL AERONAUTICS AND SPACE ADMINISTRATION
JOHN F. KENNEDY SPACE CENTER, NASA
KENNEDY SPACE CENTER, FLORIDA

REPLACE PROTECTIVE RELAYS AT C5, C5A AND ORSINO SUBSTATIONS WITH SEL RELAYS

TYPICAL "IB" BREAKER – AC SCHEMATIC
C5 SUBSTATION

A/E FILE No. 0601\0601-25\0601-25.4
FILE: E9.DWG
THIS DRAWING PREPARED BY AutoCAD 2008

E9

FILE NO. | SIZE F | DWG. NO. 79K38612

PROJ. NO. PCN 98778 | SHEET 10

NOTICE – WHEN GOVERNMENT DRAWINGS, SPECIFICATIONS, OR OTHER DATA ARE USED FOR ANY PURPOSE OTHER THAN IN CONNECTION WITH A DEFINITELY RELATED GOVERNMENT PROCUREMENT OPERATION, THE UNITED STATES GOVERNMENT THEREBY INCURS NO RESPONSIBILITY NOR ANY OBLIGATION WHATSOEVER; AND THE FACT THAT THE GOVERNMENT MAY HAVE FORMULATED, FURNISHED, OR IN ANY WAY SUPPLIED THE SAID DRAWINGS, SPECIFICATIONS, OR OTHER DATA IS NOT TO BE REGARDED BY IMPLICATION, OR OTHERWISE IN ANY MANNER LICENSING THE HOLDER OR ANY OTHER PERSON OR CORPORATION, OR CONVEYING ANY RIGHTS OR PERMISSION TO MANUFACTURE, USE, OR SELL ANY PATENTED INVENTION THAT MAY IN ANY WAY BE RELATED THERETO.

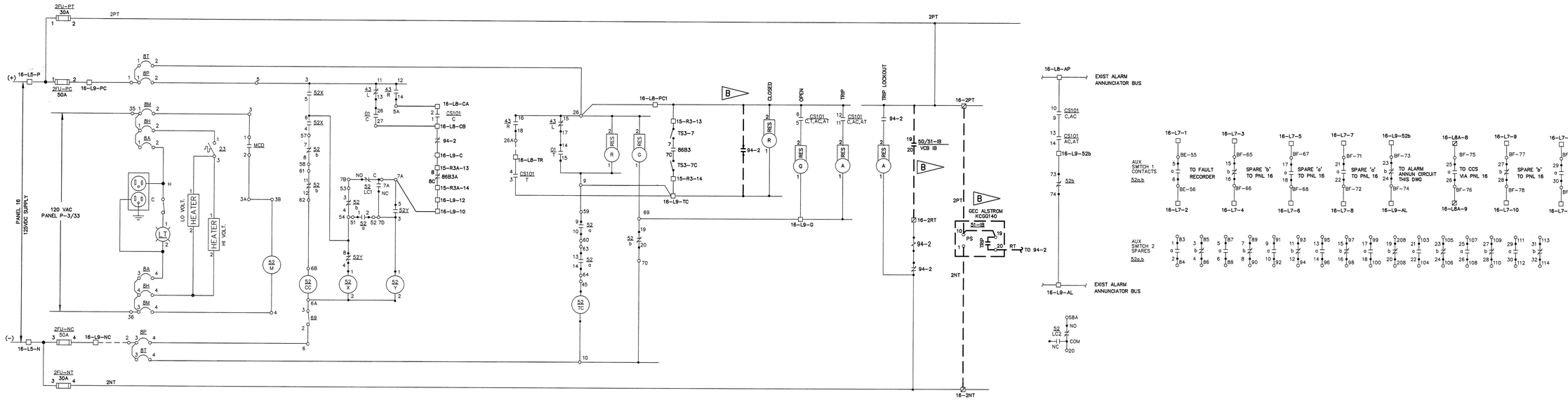

EXISTING 125Vdc CONTROL SCHEMATIC FOR 13.8KV BUS 3 TO INSPECTION BUS TIE BREAKER IB

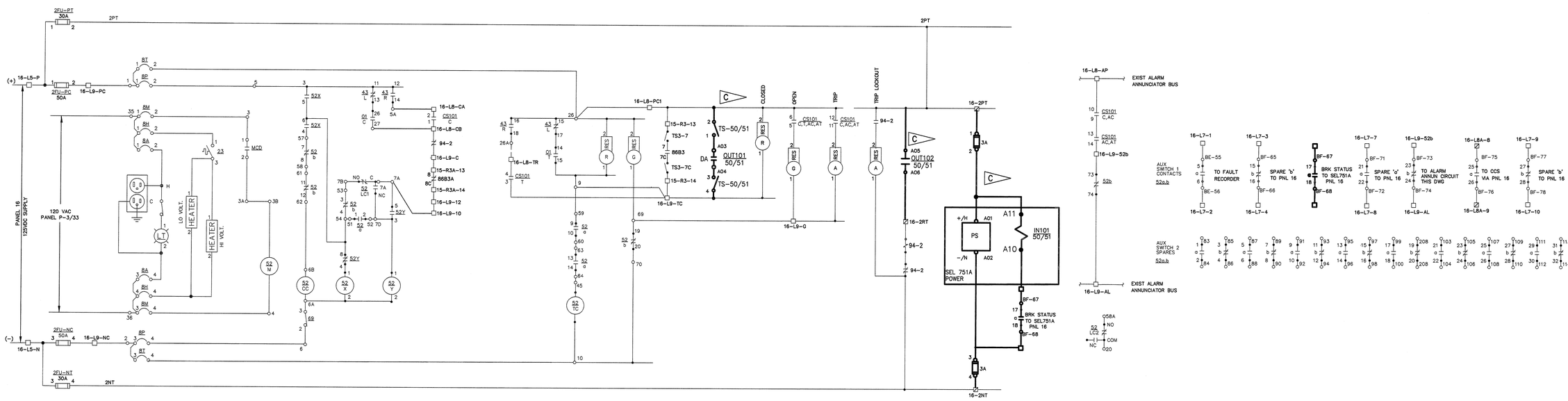

MODIFIED 125Vdc CONTROL SCHEMATIC FOR 13.8KV BUS 3 TO INSPECTION BUS TIE BREAKER IB

SPECIFIC NOTES:

A. FOR LEGEND AND GENERAL NOTES, SEE DRAWING E1.

B ▷ REMOVE EXISTING OVERCURRENT RELAYS IN INSPECTION BUS BREAKER CONTROL PANELS. CONNECTIONS SHOWN ARE TYPICAL FOR ALL INSPECTION BUS BREAKERS.

C ▷ FURNISH AND INSTALL NEW SEL 751A RELAYS AND ASSOCIATED TEST SWITCHES IN ALL CONTROL PANEL POSITIONS INDICATED ON THE SINGLE LINE DIAGRAMS.

SYM.	ZONE	DESCRIPTION	DATE	APPROVED
		REVISIONS		

ENGINEER OF RECORD: LARRY JONES — PE LICENSE NO. 19837

Fred Wilson & Associates, Inc.
Consulting Engineers
C.A. NO. 7188 • 904-398-8636
3970 Hendricks Avenue • Jacksonville, FL 32207

SIGNATURES		DATE
DESIGNED	L. JONES	6-09
DRAWN	B. GEMMELL	6-09
CHECKED	L. JONES	6-09
SUBMITTED		9/24/09
APPROVED		9/24/09
APPROVED		
APPROVED		
APPROVED		
APPROVED		
APPROVED		

NATIONAL AERONAUTICS AND SPACE ADMINISTRATION
JOHN F. KENNEDY SPACE CENTER, NASA
KENNEDY SPACE CENTER, FLORIDA

REPLACE PROTECTIVE RELAYS AT C5, C5A AND ORSINO SUBSTATIONS WITH SEL RELAYS

TYPICAL "IB" BREAKER – DC SCHEMATIC C5 SUBSTATION

A/E FILE No. 0601\0601-25\0601-25.4
FILE: E10.DWG
THIS DRAWING PREPARED BY AutoCAD 2008

E10

FILE NO. | SIZE F | DWG. NO. 79K38612

PROJ. NO. PCN 98778 | SHEET 11

NOTICE – WHEN GOVERNMENT DRAWINGS, SPECIFICATIONS, OR OTHER DATA ARE USED FOR ANY PURPOSE OTHER THAN IN CONNECTION WITH A DEFINITELY RELATED GOVERNMENT PROCUREMENT OPERATION, THE UNITED STATES GOVERNMENT THEREBY INCURS NO RESPONSIBILITY NOR ANY OBLIGATION WHATSOEVER; AND THE FACT THAT THE GOVERNMENT MAY HAVE FORMULATED, FURNISHED, OR IN ANY WAY SUPPLIED THE SAID DRAWINGS, SPECIFICATIONS OR OTHER DATA IS NOT TO BE REGARDED BY IMPLICATION OR OTHERWISE IN ANY MANNER LICENSING THE HOLDER OR ANY OTHER PERSON OR CORPORATION, OR CONVEYING ANY RIGHTS OR PERMISSION TO MANUFACTURE, USE, OR SELL ANY PATENTED INVENTION THAT MAY IN ANY WAY BE RELATED THERETO.

SPECIFIC NOTES:

A. FOR LEGEND AND GENERAL NOTES, SEE DRAWING E1.

B. REMOVE EXISTING OVERCURRENT RELAYS IN FEEDER PANELS. CONNECTIONS SHOWN ARE "TYPICAL" FOR ALL FEEDER BREAKERS.

C. FURNISH AND INSTALL NEW SEL 751A RELAYS AND ASSOCIATED TEST SWITCHES IN ALL FEEDER PANEL POSITIONS INDICATED ON THE SINGLE LINE DIAGRAMS.

D. CT RATIOS SHOWN FOR OVERCURRENT RELAYS VARY DEPENDING ON THE CIRCUIT. SEE SHEET E2 FOR THE EXISTING RELAY TYPES AND CT RATIOS USED.

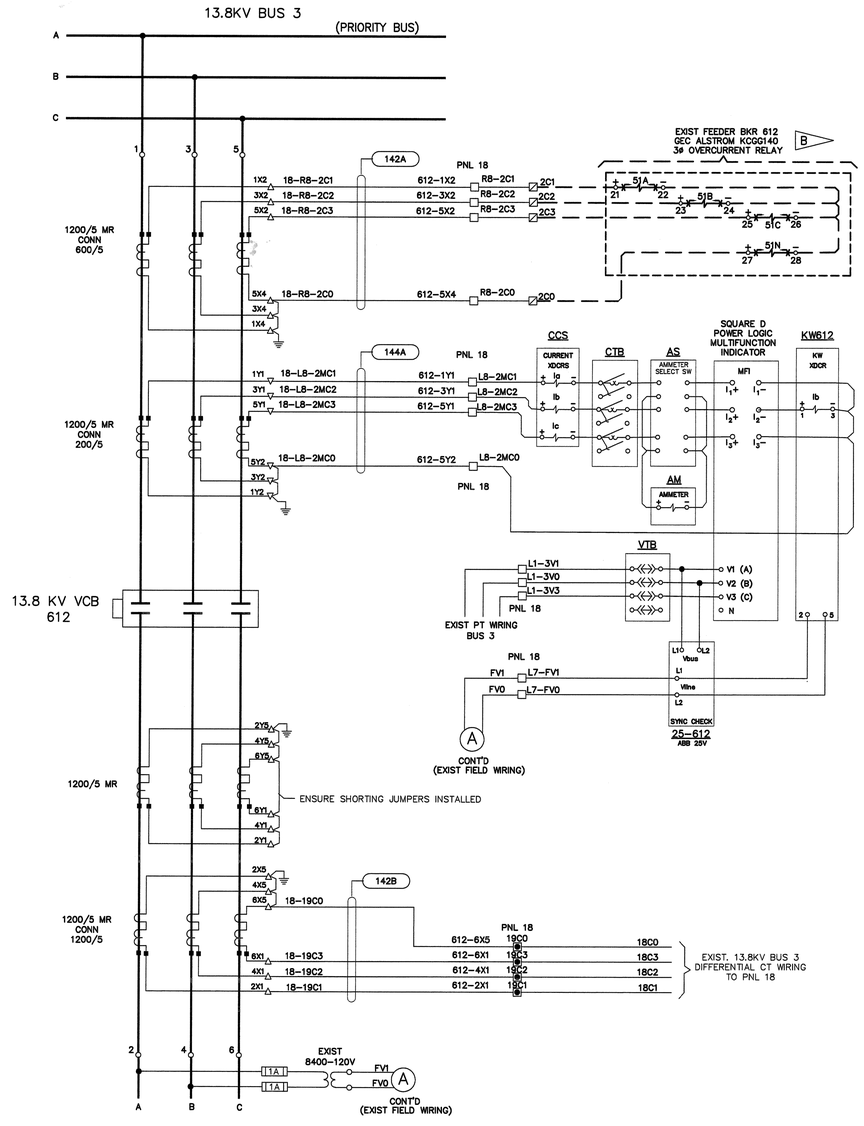

EXISTING AC SCHEMATIC

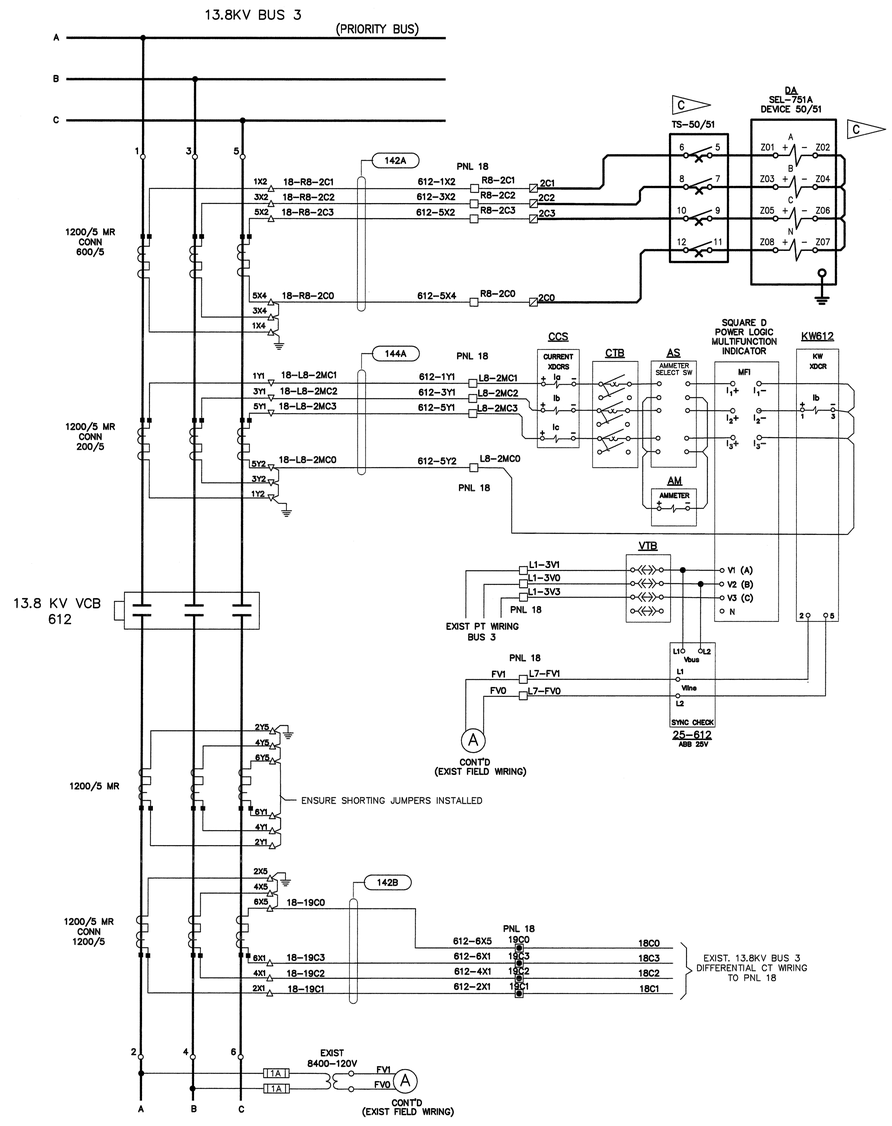

MODIFIED AC SCHEMATIC

LEGEND

- ○ DEVICE TERMINAL POINT
- △ TERMINAL BLOCK POINTS FOR CTs AT VCBs
- □ TERMINAL BLOCK AT CONTROL PNL 18
- ▨ UNLABELED TERMINAL BLOCK AT CONTROL PNL 18
- ◉ SHORTING TYPE TERMINAL BLOCK AT CONTROL PNL 18

1200/5 BUSHING C.T.		
RATIO	TURNS	TAPS
100/5	20	X2–X3
200/5	40	X1–X2
300/5	60	X1–X3
400/5	80	X4–X5
500/5	100	X3–X4
600/5	120	X2–X4
800/5	160	X1–X4
900/5	180	X3–X5
1000/5	200	X2–X5
1200/5	240	X1–X5

SYM.	ZONE	DESCRIPTION	DATE	APPROVED
		REVISIONS		

ENGINEER OF RECORD: LARRY JONES — PE LICENSE NO. 19837

Fred Wilson & Associates, Inc.
Consulting Engineers
C.A. NO. 7188 • 904-398-8636
3970 Hendricks Avenue • Jacksonville, FL 32207

SIGNATURES		DATE
DESIGNED	L. JONES	6–09
DRAWN	B. GEMMELL	6–09
CHECKED	L. JONES	6–09
SUBMITTED		9/24/09
APPROVED		9/24/09
APPROVED		
APPROVED		
APPROVED		
APPROVED		
APPROVED		

NATIONAL AERONAUTICS AND SPACE ADMINISTRATION
JOHN F. KENNEDY SPACE CENTER, NASA
KENNEDY SPACE CENTER, FLORIDA

REPLACE PROTECTIVE RELAYS AT C5, C5A AND ORSINO SUBSTATIONS WITH SEL RELAYS

TYPICAL FEEDER BREAKER– AC SCHEMATIC C5 SUBSTATION

FILE NO. | SIZE F | DWG. NO. 79K38612

PROJ. NO. PCN 98778 | SHEET 12

A/E FILE No. 0601\0601–25\0601–25.4
FILE: E11.DWG
THIS DRAWING PREPARED BY AutoCAD 2008

E11

NOTICE – WHEN GOVERNMENT DRAWINGS, SPECIFICATIONS, OR OTHER DATA ARE USED FOR ANY PURPOSE OTHER THAN IN CONNECTION WITH A DEFINITELY RELATED GOVERNMENT PROCUREMENT OPERATION, THE UNITED STATES GOVERNMENT THEREBY INCURS NO RESPONSIBILITY NOR ANY OBLIGATION WHATSOEVER; AND THE FACT THAT THE GOVERNMENT MAY HAVE FORMULATED, FURNISHED, OR IN ANY WAY SUPPLIED THE SAID DRAWINGS, SPECIFICATIONS OR OTHER DATA IS NOT TO BE REGARDED BY IMPLICATION OR OTHERWISE IN ANY MANNER LICENSING THE HOLDER OR ANY OTHER PERSON OR CORPORATION, OR CONVEYING ANY RIGHTS OR PERMISSION TO MANUFACTURE, USE, OR SELL ANY PATENTED INVENTION THAT MAY IN ANY WAY BE RELATED THERETO.

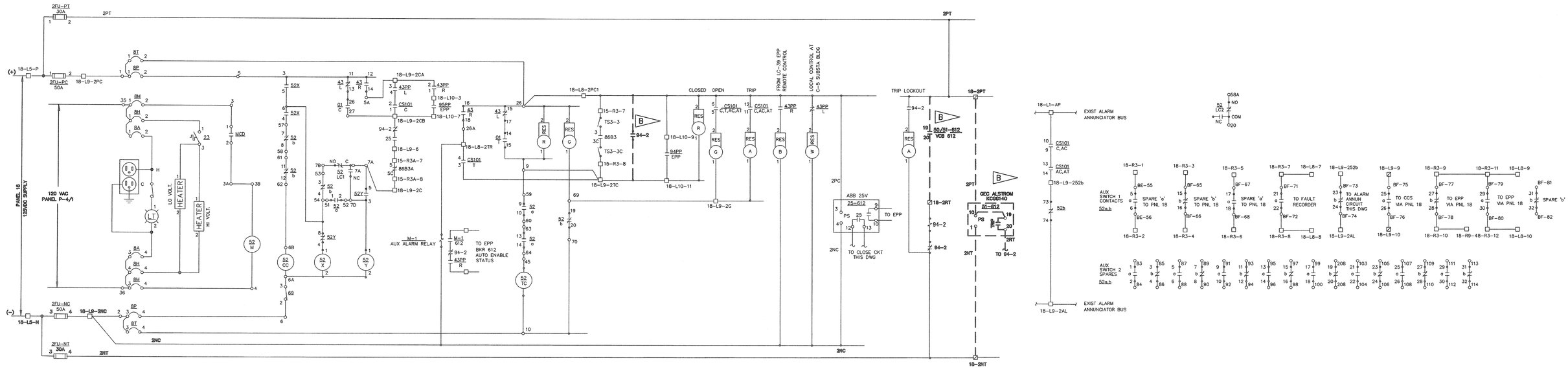

EXISTING 125Vdc CONTROL SCHEMATIC FOR 13.8KV FEEDER BREAKER 612

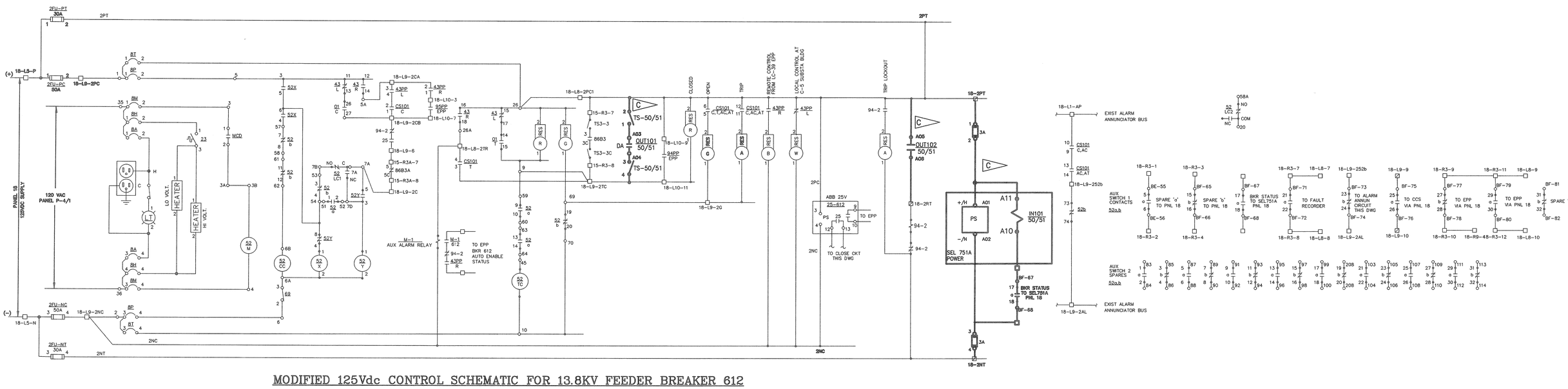

MODIFIED 125Vdc CONTROL SCHEMATIC FOR 13.8KV FEEDER BREAKER 612

SPECIFIC NOTES:

A. FOR LEGEND AND GENERAL NOTES, SEE DRAWING E1.

B. REMOVE EXISTING OVERCURRENT RELAYS IN FEEDER BREAKER CONTROL PANELS. CONNECTIONS SHOWN ARE TYPICAL FOR ALL STATION FEEDER BREAKERS.

C. FURNISH AND INSTALL NEW SEL 751A RELAYS AND ASSOCIATED TEST SWITCHES IN ALL CONTROL PANEL POSITIONS INDICATED ON THE SINGLE LINE DIAGRAMS.

SYM.	ZONE	DESCRIPTION	DATE	APPROVED
		REVISIONS		

ENGINEER OF RECORD: LARRY JONES — PE LICENSE NO. 19837

Fred Wilson & Associates, Inc.
Consulting Engineers
C.A. NO. 7188 • 904-398-8636
3970 Hendricks Avenue • Jacksonville, FL 32207

SIGNATURES		DATE
DESIGNED	L. JONES	6-09
DRAWN	B. GEMMELL	6-09
CHECKED	L. JONES	6-09
SUBMITTED		7/24/09
APPROVED		9/24/09
APPROVED		
APPROVED		
APPROVED		
APPROVED		
APPROVED		

NATIONAL AERONAUTICS AND SPACE ADMINISTRATION
JOHN F. KENNEDY SPACE CENTER, NASA
KENNEDY SPACE CENTER, FLORIDA

REPLACE PROTECTIVE RELAYS AT C5, C5A AND ORSINO SUBSTATIONS WITH SEL RELAYS

TYPICAL FEEDER BREAKER– DC SCHEMATIC
C5 SUBSTATION

FILE NO. | SIZE F | DWG. NO. 79K38612
PROJ. NO. PCN 98778 | SHEET 13

A/E FILE No. 0601\0601-25\0601-25.4
FILE: E12.DWG
THIS DRAWING PREPARED BY AutoCAD 2008

E12

NOTICE – WHEN GOVERNMENT DRAWINGS, SPECIFICATIONS, OR OTHER DATA ARE USED FOR ANY PURPOSE OTHER THAN IN CONNECTION WITH A DEFINITELY RELATED GOVERNMENT PROCUREMENT OPERATION, THE UNITED STATES GOVERNMENT THEREBY INCURS NO RESPONSIBILITY NOR ANY OBLIGATION WHATSOEVER, AND THE FACT THAT THE GOVERNMENT MAY HAVE FORMULATED, FURNISHED, OR IN ANY WAY SUPPLIED THE SAID DRAWINGS, SPECIFICATIONS OR OTHER DATA IS NOT TO BE REGARDED BY IMPLICATION OR OTHERWISE IN ANY MANNER LICENSING THE HOLDER OR ANY OTHER PERSON OR CORPORATION, OR CONVEYING ANY RIGHTS OR PERMISSION TO MANUFACTURE, USE, OR SELL ANY PATENTED INVENTION THAT MAY IN ANY WAY BE RELATED THERETO.

SPECIFIC NOTES:

A. FOR LEGEND AND GENERAL NOTES, SEE DRAWING E1.

B. REMOVE EXISTING OVERCURRENT RELAYS IN CABLE TIE BREAKER CONTROL PANELS. CONNECTIONS SHOWN ARE "TYPICAL" FOR CABLE TIE BREAKERS CT1 AND CT2.

C. FURNISH AND INSTALL NEW SEL 751A RELAYS AND ASSOCIATED TEST SWITCHES IN ALL CONTROL PANEL POSITIONS INDICATED ON THE SINGLE LINE DIAGRAMS.

D. SEE SHEET E2 FOR THE EXISTING RELAY TYPES AND CT RATIOS USED.

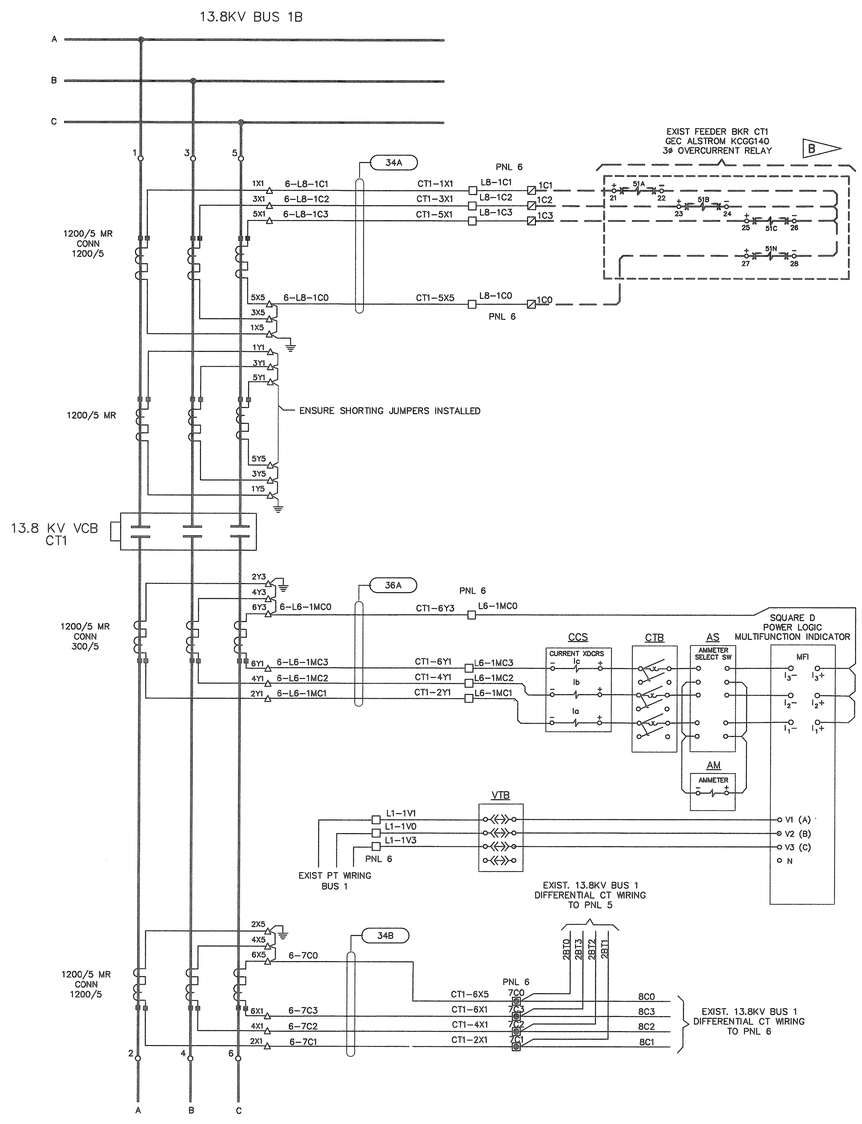

13.8KV CABLE TIE CIRCUIT CT1
TO C5-A INDOOR SWITCHGEAR
BUS 5

EXISTING AC SCHEMATIC

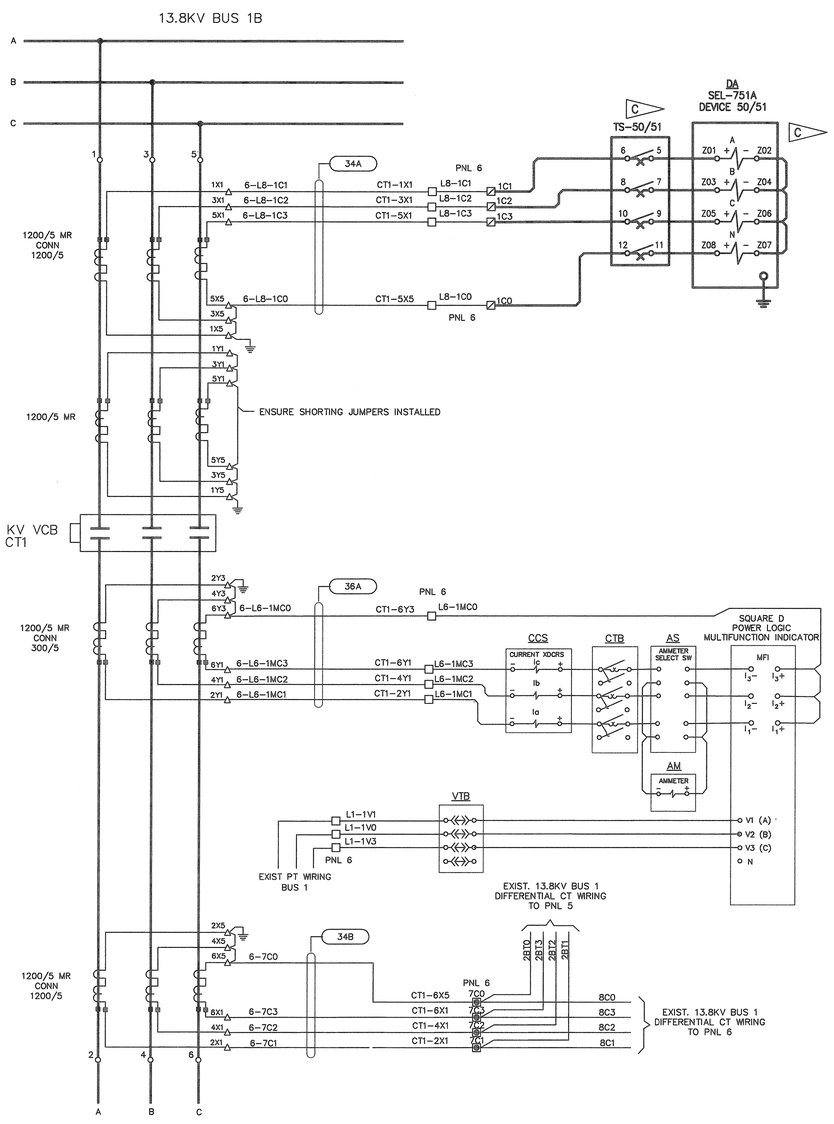

13.8KV CABLE TIE CIRCUIT CT1
TO C5-A INDOOR SWITCHGEAR
BUS 5

MODIFIED AC SCHEMATIC

LEGEND

- ○ DEVICE TERMINAL POINT
- △ TERMINAL BLOCK POINTS FOR CTs AT VCBs
- □ TERMINAL BLOCK AT CONTROL PNL 6
- ▨ UNLABELED TERMINAL BLOCK AT CONTROL PNL 6
- ◉ SHORTING TYPE TERMINAL BLOCK AT CONTROL PNL 6

1200/5 BUSHING C.T.		
RATIO	TURNS	TAPS
100/5	20	X2-X3
200/5	40	X1-X2
300/5	60	X1-X3
400/5	80	X4-X5
500/5	100	X3-X4
600/5	120	X2-X4
800/5	160	X1-X4
900/5	180	X3-X5
1000/5	200	X2-X5
1200/5	240	X1-X5

SYM.	ZONE	DESCRIPTION	DATE	APPROVED
		REVISIONS		

ENGINEER OF RECORD: LARRY JONES — PE LICENSE NO. 19837

Fred Wilson & Associates, Inc.
Consulting Engineers
C.A. NO. 7188 • 904-398-8636
3970 Hendricks Avenue • Jacksonville, FL 32207

SIGNATURES		DATE
DESIGNED	L. JONES	6-09
DRAWN	B. GEMMELL	6-09
CHECKED	L. JONES	6-09
SUBMITTED		9/24/09
APPROVED		9/24/09
APPROVED		
APPROVED		
APPROVED		
APPROVED		
APPROVED		

NATIONAL AERONAUTICS AND SPACE ADMINISTRATION
JOHN F. KENNEDY SPACE CENTER, NASA
KENNEDY SPACE CENTER, FLORIDA

REPLACE PROTECTIVE RELAYS AT C5, C5A AND ORSINO SUBSTATIONS WITH SEL RELAYS

TYPICAL CABLE TIE BREAKER- AC SCHEMATIC C5 SUBSTATION

FILE NO.	SIZE	DWG. NO.
	F	79K38612
PROJ. NO. PCN 98778		SHEET 14

A/E FILE No. 0601\0601-25\0601-25.4
FILE: E13.DWG
THIS DRAWING PREPARED BY AutoCAD 2008

E13

NOTICE – WHEN GOVERNMENT DRAWINGS, SPECIFICATIONS, OR OTHER DATA ARE USED FOR ANY PURPOSE OTHER THAN IN CONNECTION WITH A DEFINITELY RELATED GOVERNMENT PROCUREMENT OPERATION, THE UNITED STATES GOVERNMENT THEREBY INCURS NO RESPONSIBILITY NOR ANY OBLIGATION WHATSOEVER; AND THE FACT THAT THE GOVERNMENT MAY HAVE FORMULATED, FURNISHED, OR IN ANY WAY SUPPLIED THE SAID DRAWINGS, SPECIFICATIONS, OR OTHER DATA IS NOT TO BE REGARDED BY IMPLICATION OR OTHERWISE AS IN ANY MANNER LICENSING THE HOLDER OR ANY OTHER PERSON OR CORPORATION, OR CONVEYING ANY RIGHTS OR PERMISSION TO MANUFACTURE, USE, OR SELL ANY PATENTED INVENTION THAT MAY IN ANY WAY BE RELATED THERETO.

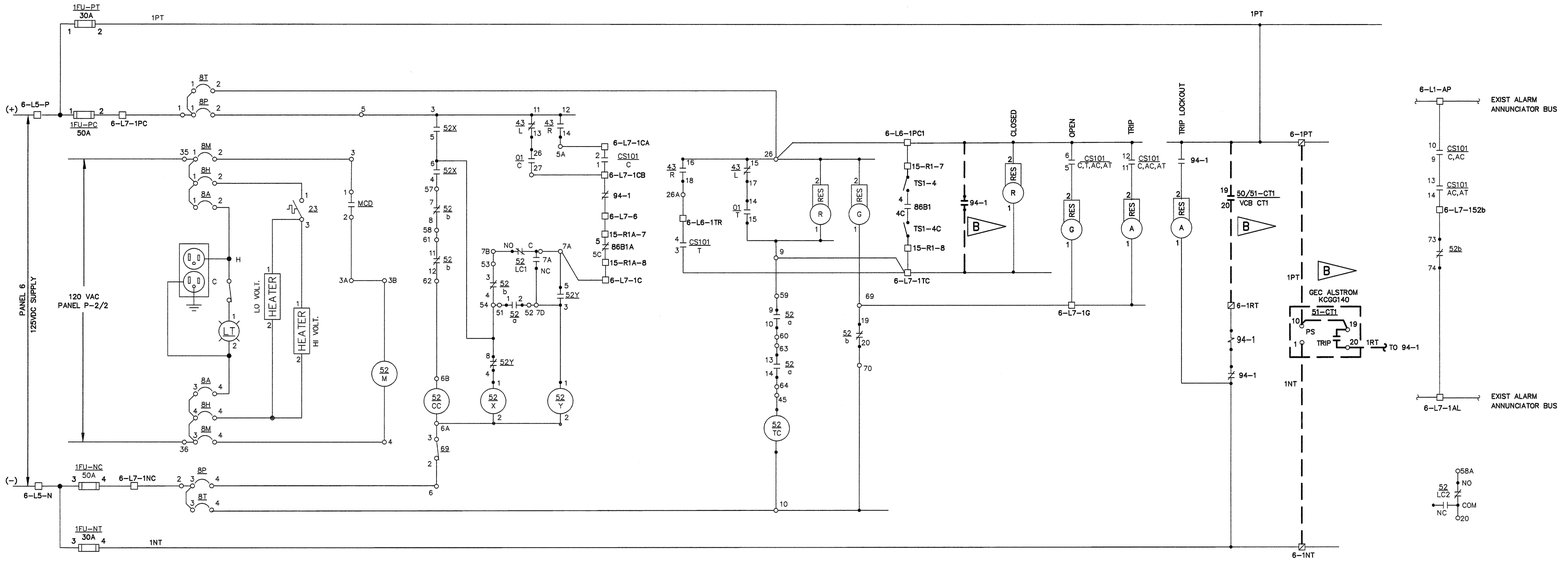

EXISTING 125Vdc CONTROL SCHEMATIC FOR 13.8KV FEEDER BREAKER CT1

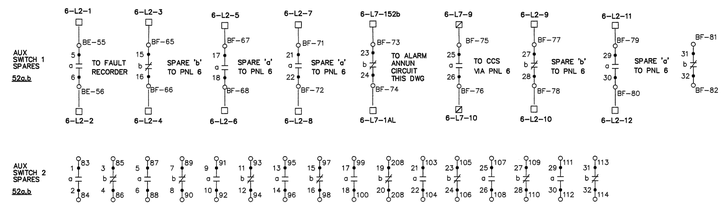

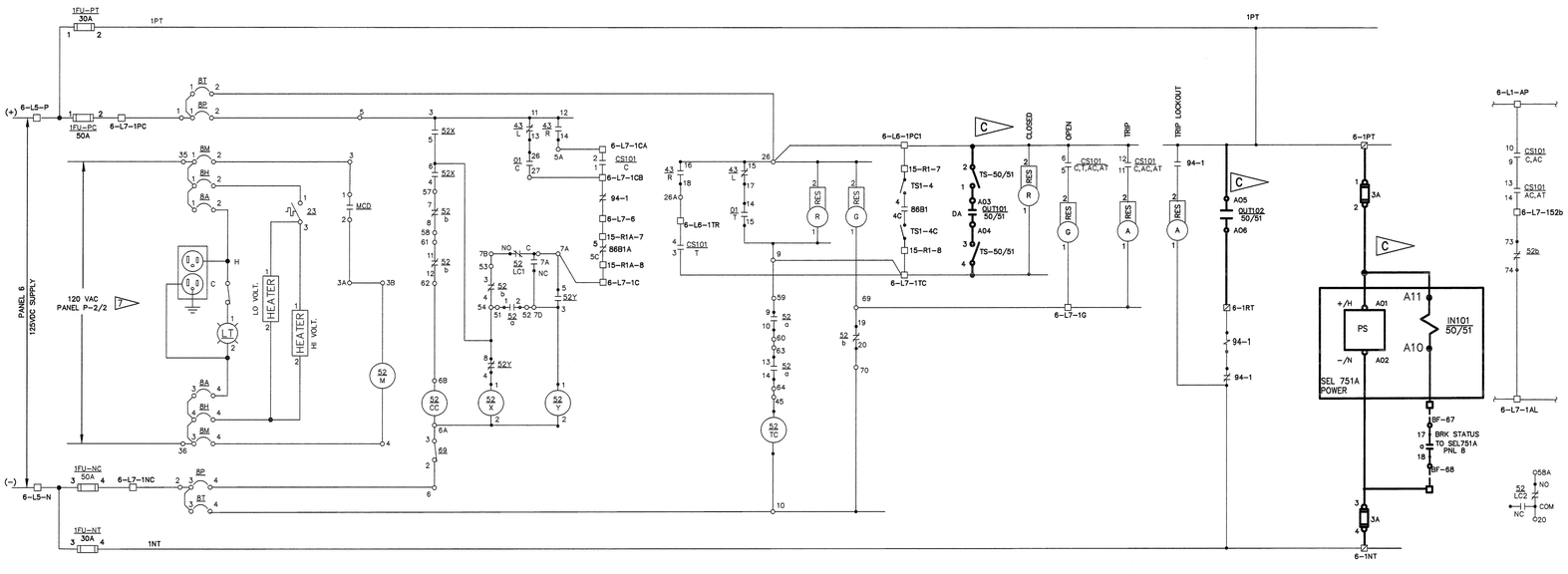

MODIFIED 125Vdc CONTROL SCHEMATIC FOR 13.8KV FEEDER BREAKER CT1

SPECIFIC NOTES:

A. FOR LEGEND AND GENERAL NOTES, SEE DRAWING E1.

B. REMOVE EXISTING OVERCURRENT RELAYS IN CABLE TIE BREAKER CONTROL PANELS. CONNECTIONS SHOWN ARE "TYPICAL" FOR CABLE TIE BREAKERS CT1 AND CT2.

C. FURNISH AND INSTALL NEW SEL 751A RELAYS AND ASSOCIATED TEST SWITCHES IN ALL CONTROL PANEL POSITIONS INDICATED ON THE SINGLE LINE DIAGRAMS.

SYM.	ZONE	DESCRIPTION	DATE	APPROVED
		REVISIONS		

ENGINEER OF RECORD: LARRY JONES — PE LICENSE NO. 19837

Fred Wilson & Associates, Inc.
Consulting Engineers
C.A. NO. 7188 • 904-398-8636
3970 Hendricks Avenue • Jacksonville, FL 32207

SIGNATURES		DATE
DESIGNED	L. JONES	6-09
DRAWN	B. GEMMELL	6-09
CHECKED	L. JONES	6-09
SUBMITTED		9/24/09
APPROVED		9/24/09
APPROVED		
APPROVED		
APPROVED		
APPROVED		
APPROVED		

NATIONAL AERONAUTICS AND SPACE ADMINISTRATION
JOHN F. KENNEDY SPACE CENTER, NASA
KENNEDY SPACE CENTER, FLORIDA

REPLACE PROTECTIVE RELAYS AT C5, C5A AND ORSINO SUBSTATIONS WITH SEL RELAYS

TYPICAL CABLE TIE BREAKER- DC SCHEMATIC
C5 SUBSTATION

FILE NO. | SIZE F | DWG. NO. 79K38612

PROJ. NO. PCN 98778 | SHEET 15

A/E FILE No. 0601\0601-25\0601-25.4
FILE: E14.DWG
THIS DRAWING PREPARED BY AutoCAD 2008

E14

NOTICE – WHEN GOVERNMENT DRAWINGS, SPECIFICATIONS, OR OTHER DATA ARE USED FOR ANY PURPOSE OTHER THAN IN CONNECTION WITH A DEFINITELY RELATED GOVERNMENT PROCUREMENT OPERATION, THE UNITED STATES GOVERNMENT THEREBY INCURS NO RESPONSIBILITY NOR ANY OBLIGATION WHATSOEVER; AND THE FACT THAT THE GOVERNMENT MAY HAVE FORMULATED, FURNISHED, OR IN ANY WAY SUPPLIED THE SAID DRAWINGS, SPECIFICATIONS, OR OTHER DATA IS NOT TO BE REGARDED BY IMPLICATION OR OTHERWISE AS IN ANY MANNER LICENSING THE HOLDER OR ANY OTHER PERSON OR CORPORATION, OR CONVEYING ANY RIGHTS OR PERMISSION TO MANUFACTURE, USE, OR SELL ANY PATENTED INVENTION THAT MAY IN ANY WAY BE RELATED THERETO.

SPECIFIC NOTES:

A. FOR LEGEND AND GENERAL NOTES, SEE DRAWING E1.

B. REMOVE EXISTING OVERCURRENT RELAYS IN BUS TIE BREAKER CONTROL PANEL. CONNECTIONS SHOWN ARE "TYPICAL" FOR BUS TIE BREAKER, IB1 AND IB2.

C. FURNISH AND INSTALL NEW SEL 751A RELAYS AND ASSOCIATED TEST SWITCHES IN ALL CONTROL PANEL POSITIONS INDICATED ON THE SINGLE LINE DIAGRAMS.

D. CT RATIOS SHOWN FOR OVERCURRENT RELAYS VARY DEPENDING ON THE CIRCUIT. SEE SHEET E2 FOR THE EXISTING RELAY TYPES AND CT RATIOS USED.

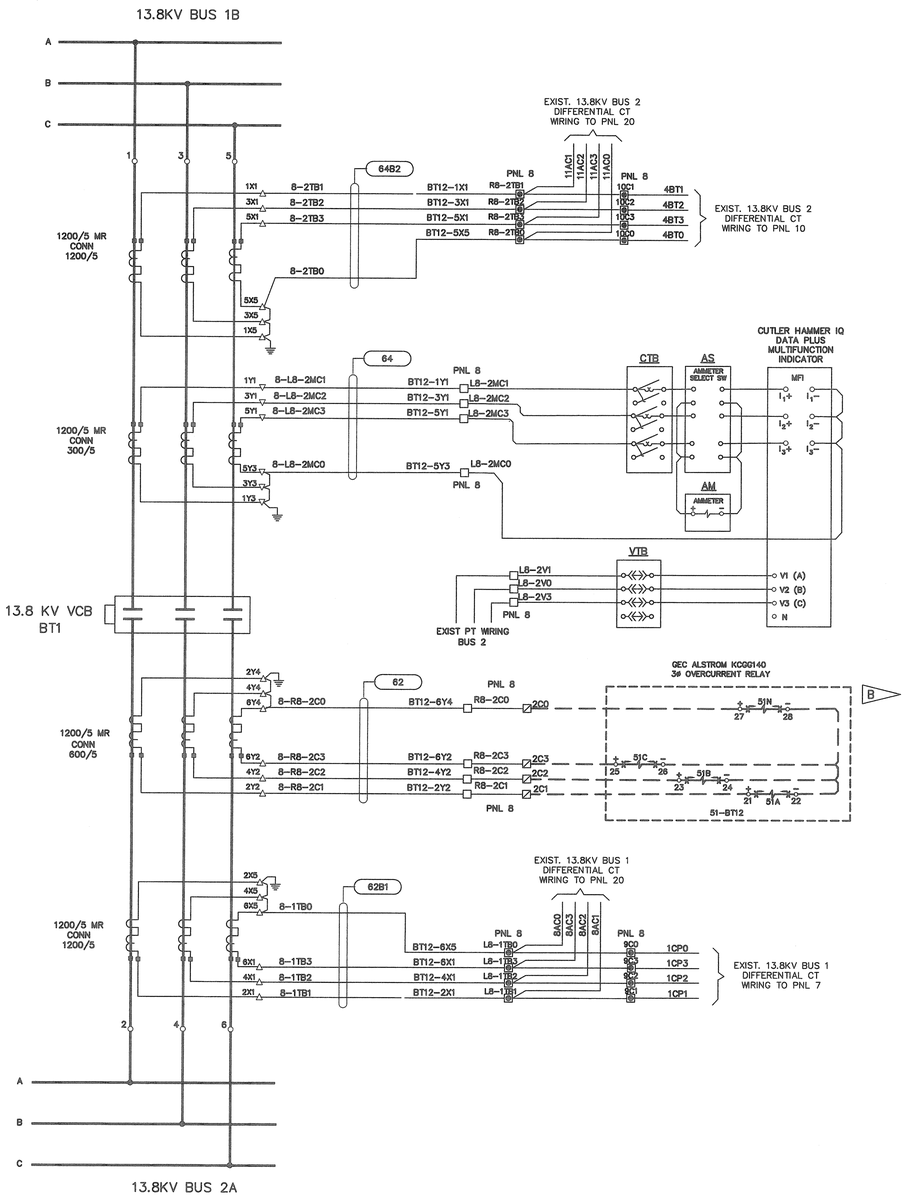

EXISTING AC SCHEMATIC

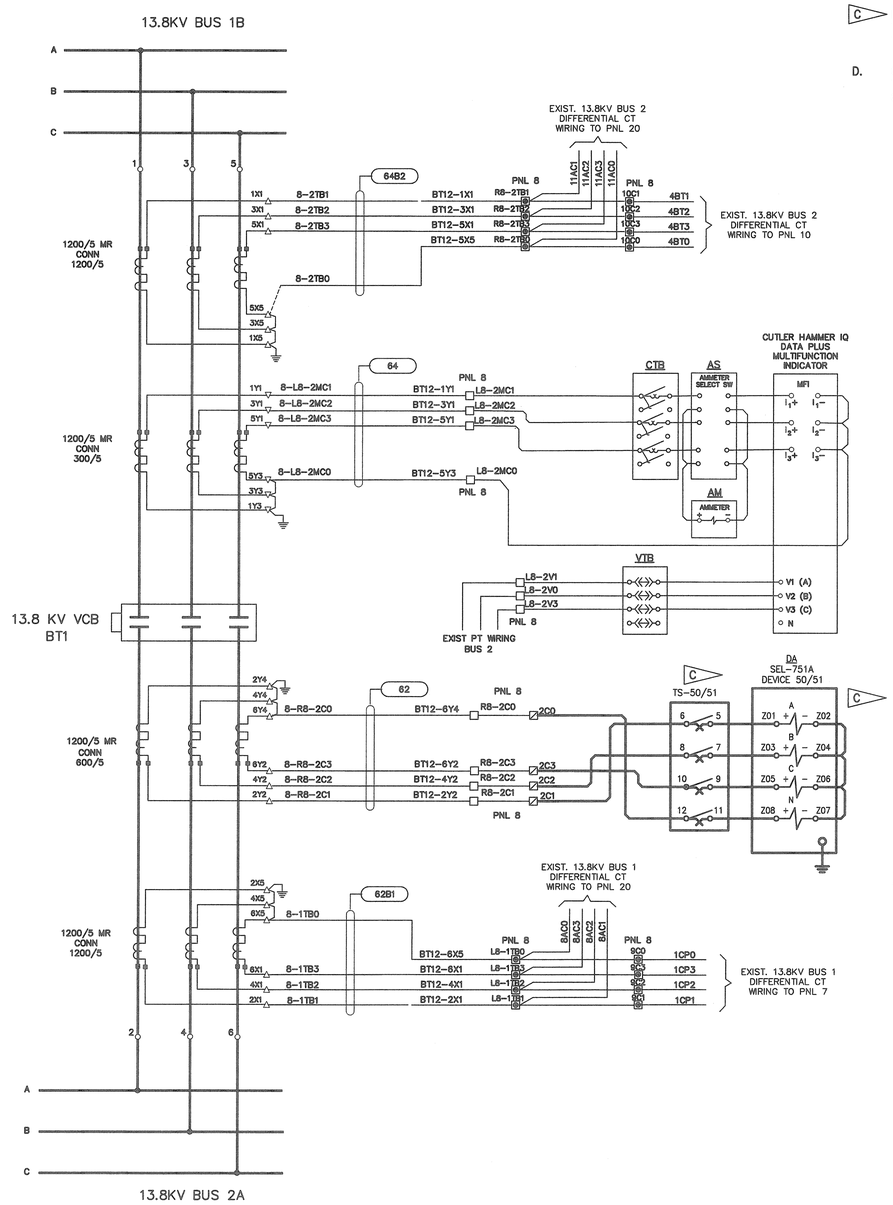

MODIFIED AC SCHEMATIC

1200/5 BUSHING C.T.		
RATIO	TURNS	TAPS
100/5	20	X2–X3
200/5	40	X1–X2
300/5	60	X1–X3
400/5	80	X4–X5
500/5	100	X3–X4
600/5	120	X2–X4
800/5	160	X1–X4
900/5	180	X3–X5
1000/5	200	X2–X5
1200/5	240	X1–X5

LEGEND

- ○ DEVICE TERMINAL POINT
- △ TERMINAL BLOCK POINTS FOR CTs AT VCBs
- □ TERMINAL BLOCK AT CONTROL PNL 8
- ▨ UNLABELED TERMINAL BLOCK AT CONTROL PNL 8
- ▣ SHORTING TYPE TERMINAL BLOCK AT CONTROL PNL 8

SYM.	ZONE	DESCRIPTION	DATE	APPROVED
		REVISIONS		

ENGINEER OF RECORD: LARRY JONES — PE LICENSE NO. 19837

Fred Wilson & Associates, Inc. Consulting Engineers
C.A. NO. 7188 • 904-398-8636
3970 Hendricks Avenue • Jacksonville, FL 32207

SIGNATURES		DATE
DESIGNED	L. JONES	6-09
DRAWN	B. GEMMELL	6-09
CHECKED	L. JONES	6-09
SUBMITTED		9/24/09
APPROVED		9/24/09
APPROVED		
APPROVED		
APPROVED		
APPROVED		
APPROVED		

NATIONAL AERONAUTICS AND SPACE ADMINISTRATION
JOHN F. KENNEDY SPACE CENTER, NASA
KENNEDY SPACE CENTER, FLORIDA

REPLACE PROTECTIVE RELAYS AT C5, C5A AND ORSINO SUBSTATIONS WITH SEL RELAYS

TYPICAL BUS TIE BREAKER– AC SCHEMATIC C5 SUBSTATION

FILE NO.	SIZE	DWG. NO.
	F	79K38612
PROJ. NO. PCN 98778		SHEET 16

A/E FILE No. 0601\0601-25\0601-25.4
FILE: E15.DWG
THIS DRAWING PREPARED BY AutoCAD 2008

E15

NOTICE – WHEN GOVERNMENT DRAWINGS, SPECIFICATIONS, OR OTHER DATA ARE USED FOR ANY PURPOSE OTHER THAN IN CONNECTION WITH A DEFINITELY RELATED GOVERNMENT PROCUREMENT OPERATION, THE UNITED STATES GOVERNMENT THEREBY INCURS NO RESPONSIBILITY NOR ANY OBLIGATION WHATSOEVER; AND THE FACT THAT THE GOVERNMENT MAY HAVE FORMULATED, FURNISHED, OR IN ANY WAY SUPPLIED THE SAID DRAWINGS, SPECIFICATIONS OR OTHER DATA IS NOT TO BE REGARDED BY IMPLICATION OR OTHERWISE AS IN ANY MANNER LICENSING THE HOLDER OR ANY OTHER PERSON OR CORPORATION, OR CONVEYING ANY RIGHTS OR PERMISSION TO MANUFACTURE, USE, OR SELL ANY PATENTED INVENTION THAT MAY IN ANY WAY BE RELATED THERETO.

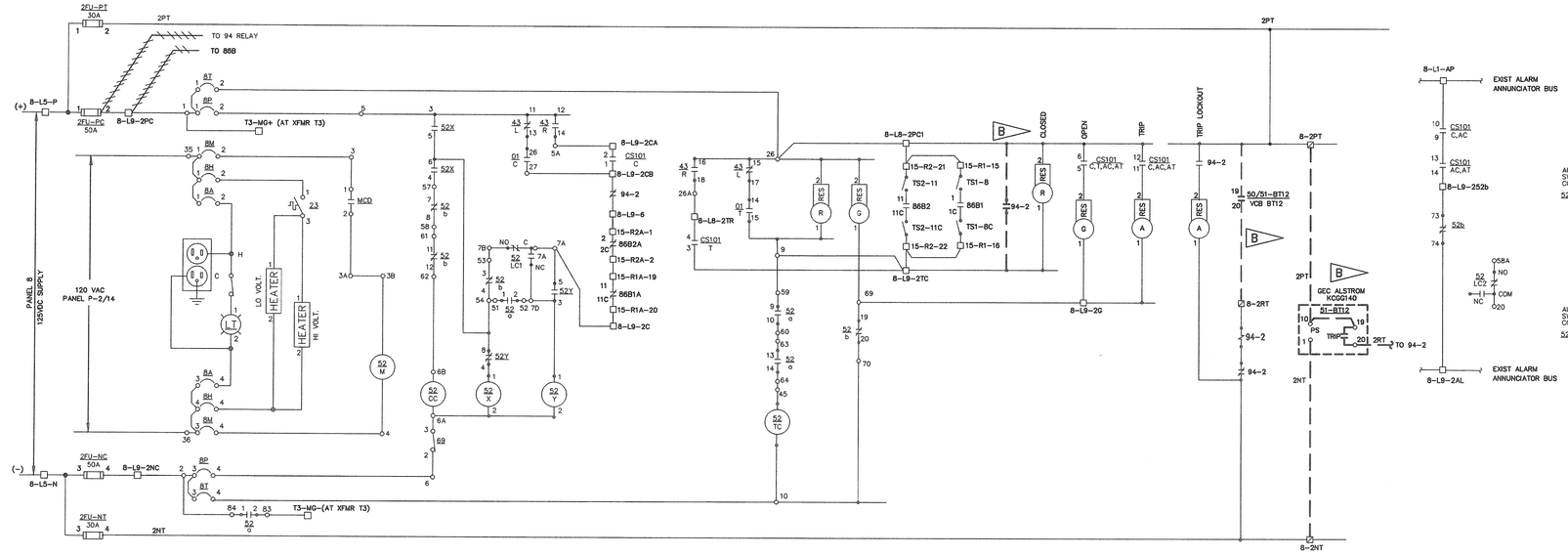

EXISTING 125Vdc CONTROL SCHEMATIC FOR 13.8KV BUS 1 – BUS 2 TIE BREAKER BT12

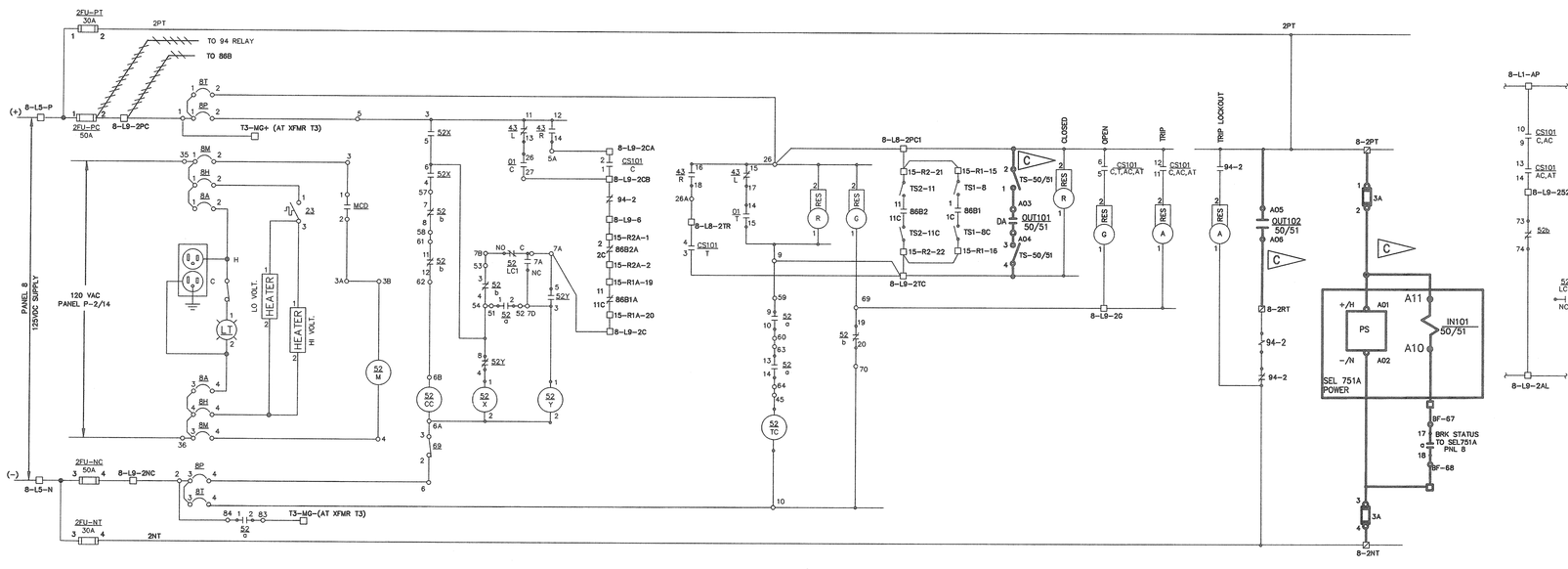

MODIFIED 125Vdc CONTROL SCHEMATIC FOR 13.8KV BUS 1 – BUS 2 TIE BREAKER BT12

SPECIFIC NOTES:

A. FOR LEGEND & GENERAL NOTES SEE DRAWING E1.

B. REMOVE EXISTING OVERCURRENT RELAYS IN BUS TIE BREAKER CONTROL PANELS. CONNECTIONS SHOWN ARE "TYPICAL FOR BUS TIE BREAKER BT12.

C. FURNISH AND INSTALL NEW SEL 751A RELAYS AND ASSOCIATED TEST SWITCHES IN ALL CONTROL PANEL POSITIONS INDICATED ON THE SINGLE LINE DIAGRAMS.

SYM.	ZONE	DESCRIPTION	DATE	APPROVED
		REVISIONS		

ENGINEER OF RECORD: LARRY JONES — PE LICENSE NO. 19837

Fred Wilson & Associates, Inc.
Consulting Engineers
C.A. NO. 7188 • 904-398-8636
3970 Hendricks Avenue • Jacksonville, FL 32207

SIGNATURES		DATE
DESIGNED	L. JONES	6-09
DRAWN	B. GEMMELL	6-09
CHECKED	L. JONES	6-09
SUBMITTED		9/24/09
APPROVED		9/24/09
APPROVED		
APPROVED		
APPROVED		
APPROVED		
APPROVED		

NATIONAL AERONAUTICS AND SPACE ADMINISTRATION
JOHN F. KENNEDY SPACE CENTER, NASA
KENNEDY SPACE CENTER, FLORIDA

REPLACE PROTECTIVE RELAYS AT C5, C5A AND ORSINO SUBSTATIONS WITH SEL RELAYS

TYPICAL BUS TIE BREAKER–DC SCHEMATIC C5 SUBSTATION

A/E FILE No. 0601\0601-25\0601-25.4
FILE: E16.DWG
THIS DRAWING PREPARED BY AutoCAD 2008

E16

FILE NO.	SIZE	DWG. NO.
	F	79K38612
PROJ. NO. PCN 98778		SHEET 17

NOTICE – WHEN GOVERNMENT DRAWINGS, SPECIFICATIONS, OR OTHER DATA ARE USED FOR ANY PURPOSE OTHER THAN IN CONNECTION WITH A DEFINITELY RELATED GOVERNMENT PROCUREMENT OPERATION, THE UNITED STATES GOVERNMENT THEREBY INCURS NO RESPONSIBILITY NOR ANY OBLIGATION WHATSOEVER; AND THE FACT THAT THE GOVERNMENT MAY HAVE FORMULATED, FURNISHED, OR IN ANY WAY SUPPLIED THE SAME, OR ANY PATENT OR OTHER DATA THEREON, IS NOT TO BE REGARDED BY IMPLICATION, OR OTHERWISE AS IN ANY MANNER LICENSING THE HOLDER OR ANY OTHER PERSON OR CORPORATION, OR CONVEYING ANY RIGHTS OR PERMISSION TO MANUFACTURE, USE, OR SELL ANY PATENTED INVENTION THAT MAY IN ANY WAY BE RELATED THERETO.

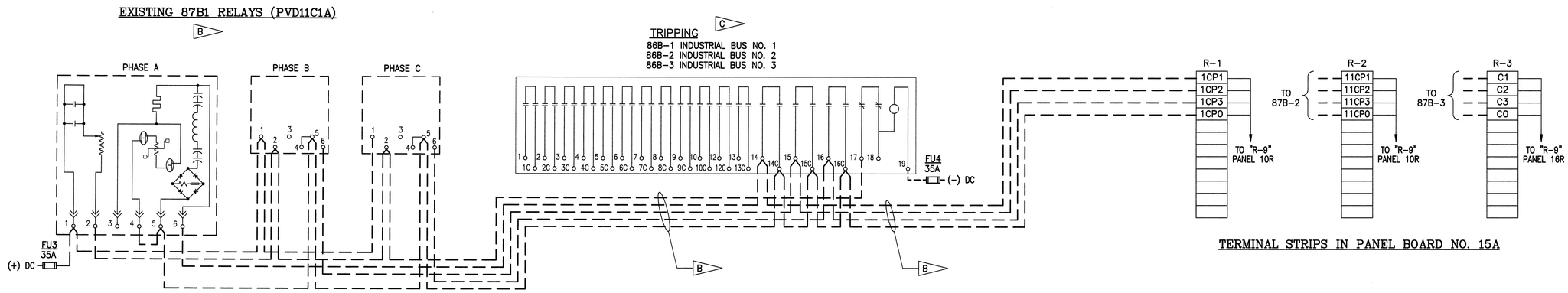

EXISTING 13.8kV BUS DIFFERENTIAL RELAYS AC SCHEMATIC

BUS 1 SHOWN (BUS 2 AND BUS 3 SIMILAR)

SPECIFIC NOTES:

A. FOR LEGEND AND GENERAL NOTES, SEE DRAWING E1.

B. EQUIPMENT AND WIRING TO BE REMOVED. RELAYS AND WIRING ARE LOCATED IN PANEL 15A.

C. THE EXISTING WIRING FROM THE 86B-1, 86B-2 AND 86B-3 TRIP CONTACTS SHALL REMAIN IN SERVICE.

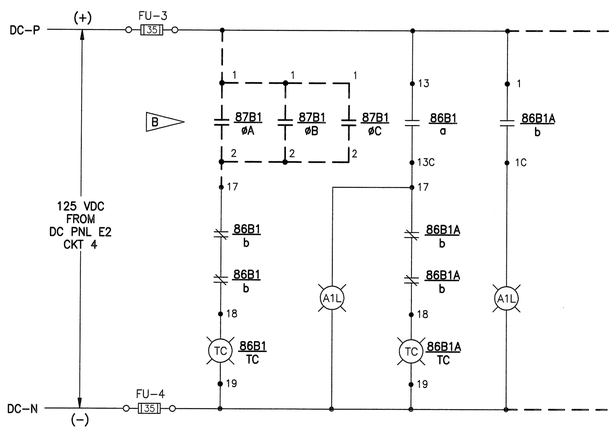

EXISTING 13.8kV BUS DIFFERENTIAL LOCKOUT RELAY DC SCHEMATIC

86B1 SHOWN (86B2 AND 86B3 SIMILAR)

SYM.	ZONE	DESCRIPTION	DATE	APPROVED
		REVISIONS		

ENGINEER OF RECORD: LARRY JONES — PE LICENSE NO. 19837

Fred Wilson & Associates, Inc.
Consulting Engineers
C.A. NO. 7188 • 904-398-8636
3970 Hendricks Avenue • Jacksonville, FL 32207

SIGNATURES		DATE
DESIGNED	L. JONES	6-09
DRAWN	B. GEMMELL	6-09
CHECKED	L. JONES	6-09
SUBMITTED		9/24/09
APPROVED		9/24/09
APPROVED		
APPROVED		
APPROVED		
APPROVED		
APPROVED		

NATIONAL AERONAUTICS AND SPACE ADMINISTRATION
JOHN F. KENNEDY SPACE CENTER, NASA
KENNEDY SPACE CENTER, FLORIDA

REPLACE PROTECTIVE RELAYS AT C5, C5A AND ORSINO SUBSTATIONS WITH SEL RELAYS

EXISTING C5 13.8kV BUS DIFFERENTIAL RELAY SCHEMATICS

FILE NO. | SIZE F | DWG. NO. 79K38612

PROJ. NO. PCN 98778 | SHEET 18

A/E FILE No. 0601\0601-25\0601-25.4
FILE: E17.DWG
THIS DRAWING PREPARED BY AutoCAD 2008

E17

KSC FORM 1-11A (REV 6/91) (C/G 12/93) | 09/18/2009 | F:\ELECT\0601\0601-25\0601-25.4\E17

NOTICE – WHEN GOVERNMENT DRAWINGS, SPECIFICATIONS, OR OTHER DATA ARE USED FOR ANY PURPOSE OTHER THAN IN CONNECTION WITH A DEFINITELY RELATED GOVERNMENT PROCUREMENT OPERATION, THE UNITED STATES GOVERNMENT THEREBY INCURS NO RESPONSIBILITY NOR ANY OBLIGATION WHATSOEVER; AND THE FACT THAT THE GOVERNMENT MAY HAVE FORMULATED, FURNISHED, OR IN ANY WAY SUPPLIED THE SAID DRAWINGS, SPECIFICATIONS OR OTHER DATA IS NOT TO BE REGARDED BY IMPLICATION OR OTHERWISE AS IN ANY MANNER LICENSING THE HOLDER OR ANY OTHER PERSON OR CORPORATION, OR CONVEYING ANY RIGHTS OR PERMISSION TO MANUFACTURE, USE, OR SELL ANY PATENTED INVENTION THAT MAY IN ANY WAY BE RELATED THERETO.

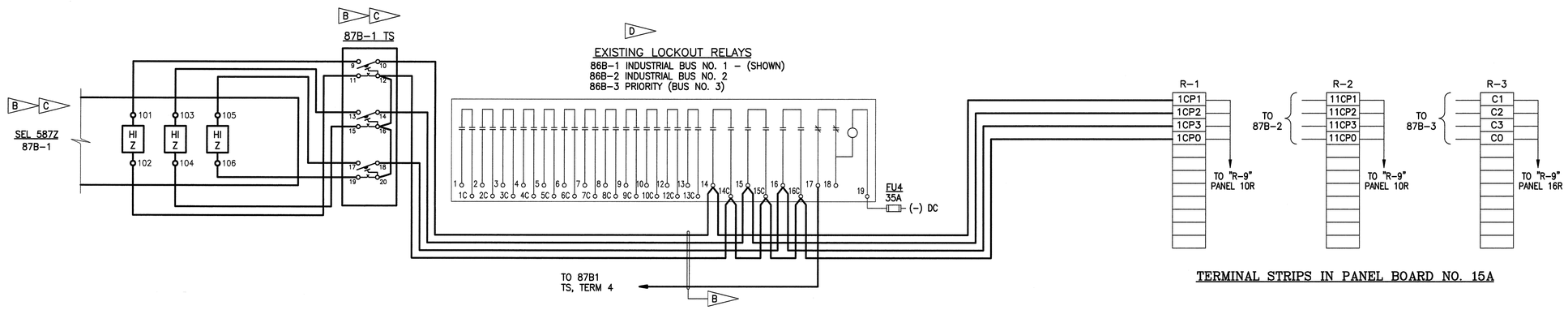

MODIFIED 13.8kV BUS DIFFERENTIAL RELAYS AC SCHEMATIC

BUS 1 SHOWN (BUS 2 AND BUS 3 SIMILAR)

SPECIFIC NOTES:

A. FOR LEGEND AND GENERAL NOTES, SEE DRAWING E1.

B. EQUIPMENT AND WIRING TO BE ADDED. RELAYS AND WIRING ARE LOCATED IN PANEL 15A. SEE E25 FOR PANEL MODIFICATIONS REQUIRED.

C. TYPICAL FOR 87B-2, 87B-3, 87B-2 TS AND 87B-3 TS.

D. CONTRACTOR SHALL COORDINATE WITH ISC PERSONNEL PRIOR TO TESTING OF RELAYS. SEE DRAWING E2 FOR BUS/BREAKER DESIGNATIONS.

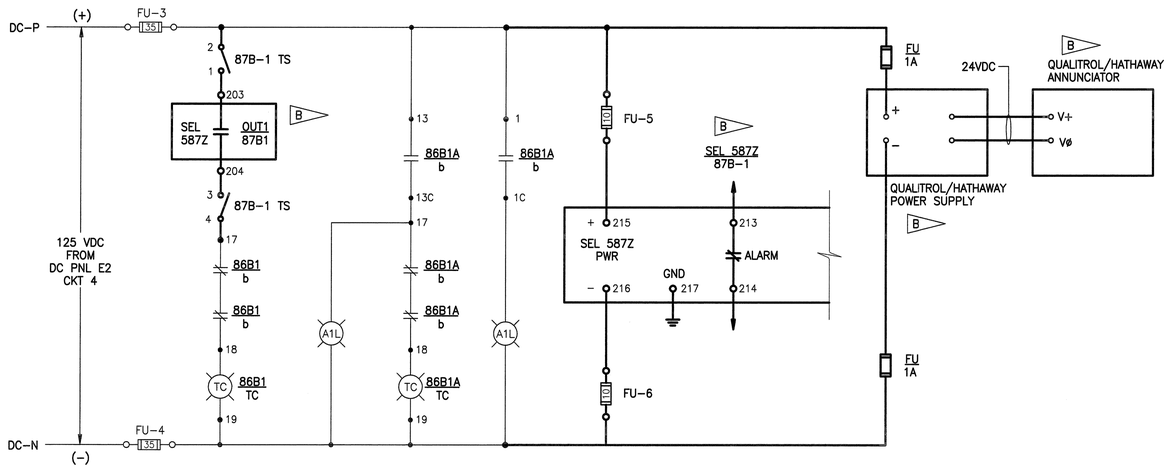

MODIFIED 13.8kV BUS DIFFERENTIAL LOCKOUT RELAYS

86B1 SHOWN (86B2 AND 86B3 SIMILAR)

SYM.	ZONE	DESCRIPTION	DATE	APPROVED
		REVISIONS		

ENGINEER OF RECORD: LARRY JONES — PE LICENSE NO. 19837

Fred Wilson & Associates, Inc.
Consulting Engineers
C.A. NO. 7188 • 904-398-8636
3970 Hendricks Avenue • Jacksonville, FL 32207

SIGNATURES		DATE
DESIGNED	L. JONES	6-09
DRAWN	B. GEMMELL	6-09
CHECKED	L. JONES	6-09
SUBMITTED		9/24/09
APPROVED		9/24/09
APPROVED		
APPROVED		
APPROVED		
APPROVED		
APPROVED		

NATIONAL AERONAUTICS AND SPACE ADMINISTRATION
JOHN F. KENNEDY SPACE CENTER, NASA
KENNEDY SPACE CENTER, FLORIDA

REPLACE PROTECTIVE RELAYS AT C5, C5A AND ORSINO SUBSTATIONS WITH SEL RELAYS

MODIFIED C5 13.8kV BUS DIFFERENTIAL RELAY SCHEMATICS

A/E FILE No. 0601\0601-25\0601-25.4
FILE: E18.DWG
THIS DRAWING PREPARED BY AutoCAD 2005

E18

FILE NO. | SIZE F | DWG. NO. 79K38612

PROJ. NO. PCN 98778 | SHEET 19

NOTICE – WHEN GOVERNMENT DRAWINGS, SPECIFICATIONS, OR OTHER DATA ARE USED FOR ANY PURPOSE OTHER THAN IN CONNECTION WITH A DEFINITELY-RELATED GOVERNMENT PROCUREMENT OPERATION, THE UNITED STATES GOVERNMENT THEREBY INCURS NO RESPONSIBILITY NOR ANY OBLIGATION WHATSOEVER, AND THE FACT THAT THE GOVERNMENT MAY HAVE FORMULATED, FURNISHED, OR IN ANY WAY SUPPLIED THE SAID DRAWINGS, SPECIFICATIONS OR OTHER DATA IS NOT TO BE REGARDED BY IMPLICATION OR OTHERWISE IN ANY MANNER LICENSING THE HOLDER OR ANY OTHER PERSON OR CORPORATION, OR CONVEYING ANY RIGHTS OR PERMISSION TO MANUFACTURE, USE, OR SELL ANY PATENTED INVENTION THAT MAY IN ANY WAY BE RELATED THERETO.

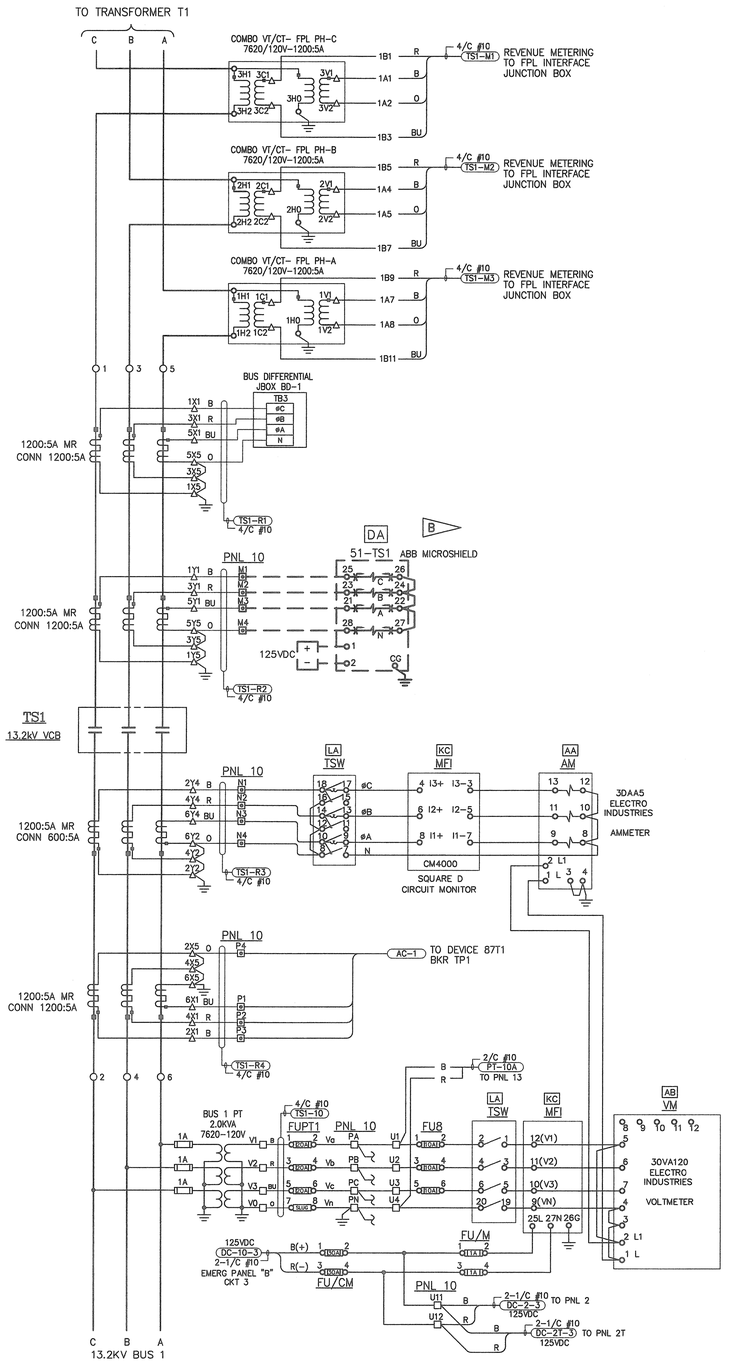

EXISTING AC SCHEMATIC

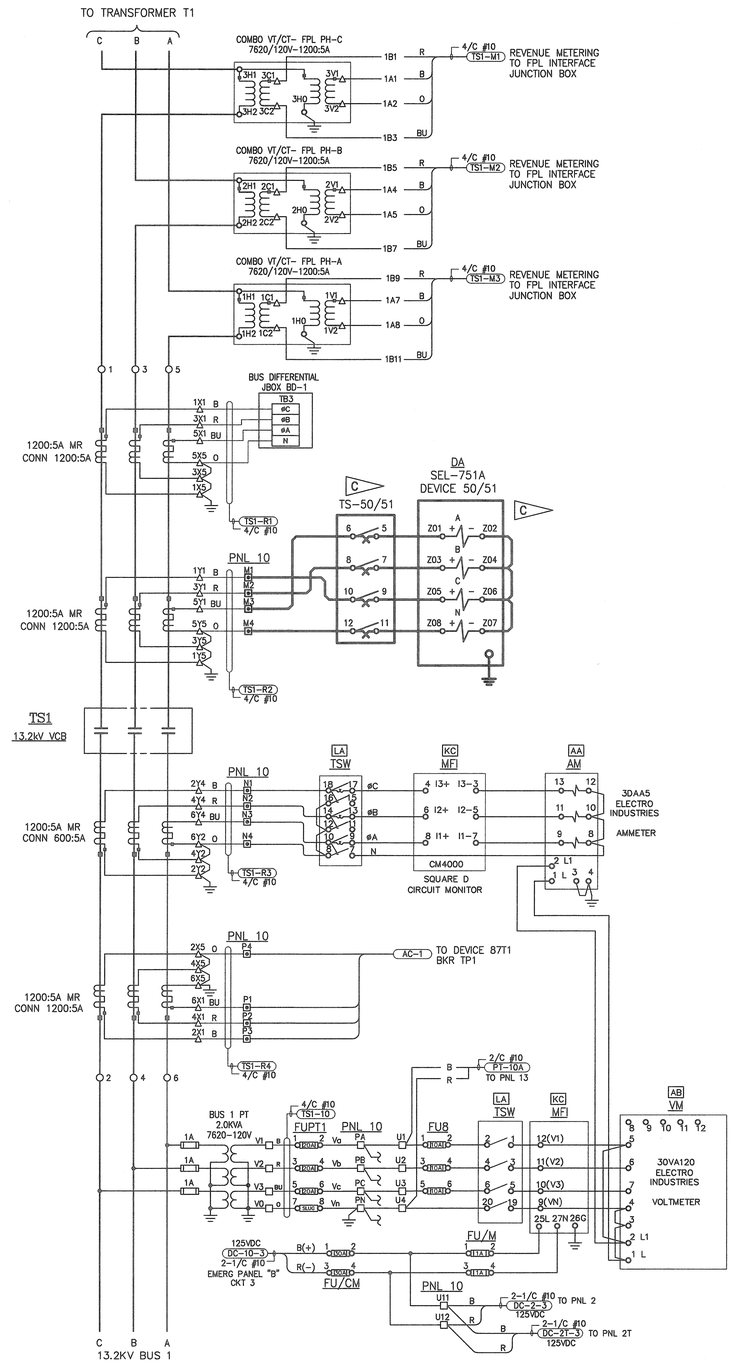

MODIFIED AC SCHEMATIC

SPECIFIC NOTES:

A. FOR LEGEND AND GENERAL NOTES, SEE DRAWING E1.

B. REMOVE EXISTING OVERCURRENT RELAYS IN TRANSFORMER CONTROL PANELS. CONNECTIONS SHOWN ARE "TYPICAL" FOR ALL TRANSFORMER BREAKER POSITIONS.

C. FURNISH AND INSTALL NEW SEL 751A RELAYS AND ASSOCIATED TEST SWITCHES IN ALL CONTROL PANEL POSITIONS INDICATED ON THE SINGLE LINE DIAGRAMS.

D. CT RATIOS SHOWN FOR OVERCURRENT RELAYS VARY DEPENDING ON THE CIRCUIT. SEE SHEET E3 FOR THE EXISTING RELAY TYPES AND CT RATIOS USED.

1200/5 BUSHING C.T.		
RATIO	TURNS	TAPS
100/5	20	X2–X3
200/5	40	X1–X2
300/5	60	X1–X3
400/5	80	X4–X5
500/5	100	X3–X4
600/5	120	X2–X4
800/5	160	X1–X4
900/5	180	X3–X5
1000/5	200	X2–X5
1200/5	240	X1–X5

SYM.	ZONE	DESCRIPTION	DATE	APPROVED
		REVISIONS		

ENGINEER OF RECORD: LARRY JONES — PE LICENSE NO. 19837

Fred Wilson & Associates, Inc. Consulting Engineers
C.A. NO. 7188 • 904-398-8636
3970 Hendricks Avenue • Jacksonville, FL 32207

SIGNATURES		DATE
DESIGNED	L. JONES	6–09
DRAWN	B. GEMMELL	6–09
CHECKED	L. JONES	6–09
SUBMITTED		9/24/09
APPROVED		9/24/09
APPROVED		
APPROVED		
APPROVED		
APPROVED		
APPROVED		

NATIONAL AERONAUTICS AND SPACE ADMINISTRATION
JOHN F. KENNEDY SPACE CENTER, NASA
KENNEDY SPACE CENTER, FLORIDA

REPLACE PROTECTIVE RELAYS AT C5, C5A AND ORSINO SUBSTATIONS WITH SEL RELAYS
TYPICAL TRANSFORMER BREAKER AC SCHEMATIC
ORSINO SUBSTATION

FILE NO.	SIZE	DWG. NO.
	F	79K38612
PROJ. NO. PCN 98778		SHEET 20

A/E FILE No. 0601\0601–25\0601–25.4
FILE: E19.DWG
THIS DRAWING PREPARED BY AutoCAD 2008

E19

NOTICE – WHEN GOVERNMENT DRAWINGS, SPECIFICATIONS, OR OTHER DATA ARE USED FOR ANY PURPOSE OTHER THAN IN CONNECTION WITH A DEFINITELY RELATED GOVERNMENT PROCUREMENT OPERATION, THE UNITED STATES GOVERNMENT THEREBY INCURS NO RESPONSIBILITY NOR ANY OBLIGATION WHATSOEVER; AND THE FACT THAT THE GOVERNMENT MAY HAVE FORMULATED, FURNISHED, OR IN ANY WAY SUPPLIED THE SAID DRAWINGS, SPECIFICATIONS, OR OTHER DATA IS NOT TO BE REGARDED BY IMPLICATION OR OTHERWISE AS IN ANY MANNER LICENSING THE HOLDER OR ANY OTHER PERSON OR CORPORATION, OR CONVEYING ANY RIGHTS OR PERMISSION TO MANUFACTURE, USE, OR SELL ANY PATENTED INVENTION THAT MAY IN ANY WAY BE RELATED THERETO.

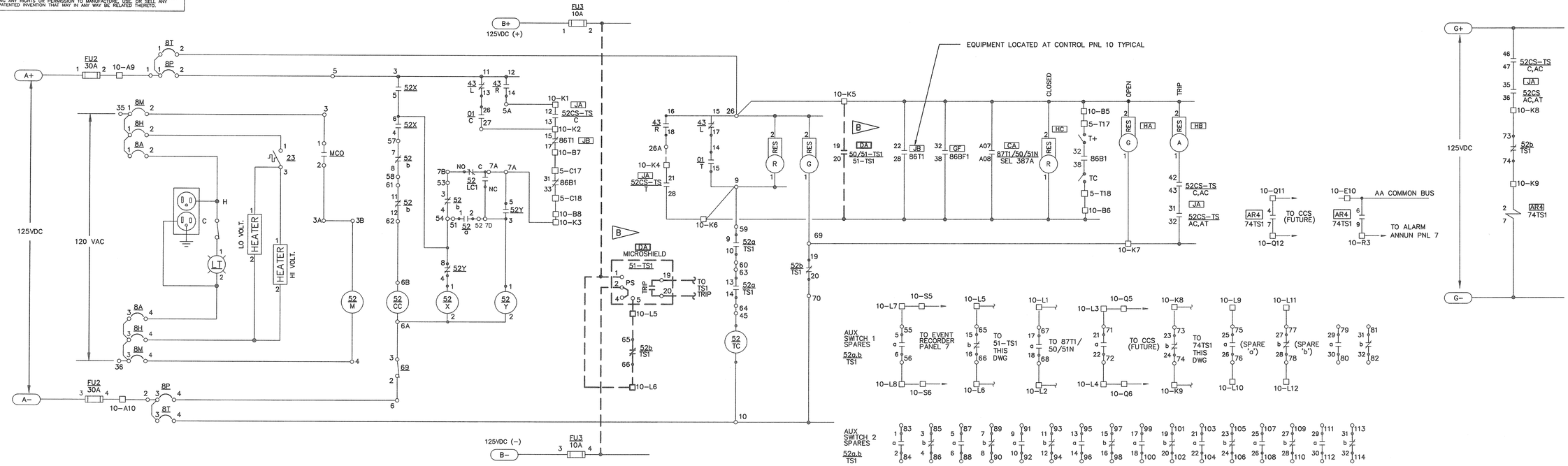

EXISTING 125Vdc CONTROL SCHEMATIC FOR TRANSFORMER T1 SECONDARY 13.2KV BREAKER VCB TS1

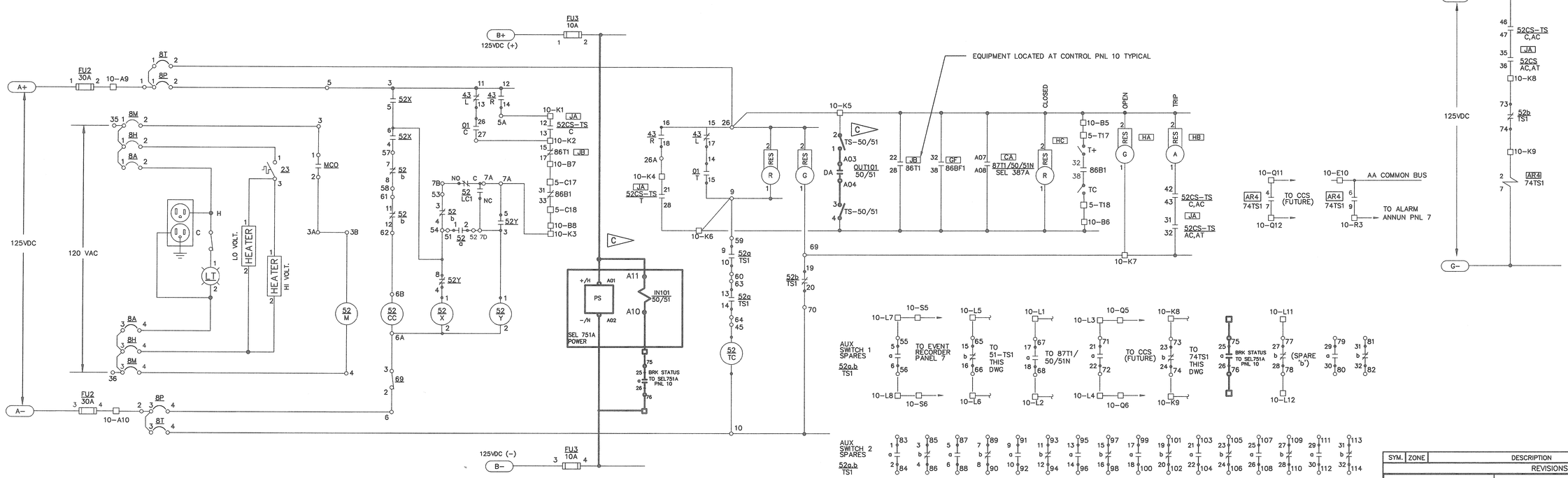

MODIFIED 125Vdc CONTROL SCHEMATIC FOR TRANSFORMER T1 SECONDARY 13.2KV BREAKER VCB TS1

SPECIFIC NOTES:

A. FOR LEGEND AND GENERAL NOTES, SEE DRAWING E1.

B. REMOVE EXISTING OVERCURRENT RELAYS AND ASSOCIATED TEST SWITCHES IN CONTROL PANELS. CONNECTIONS SHOWN ARE "TYPICAL" FOR ALL TRANSFORMER BREAKERS.

C. FURNISH AND INSTALL NEW SEL 751A RELAYS AND ASSOCIATED TEST SWITCHES IN ALL CONTROL PANEL POSITIONS ASSOCIATED WITH BREAKERS INDICATED ON THE SINGLE LINE DIAGRAMS.

SYM.	ZONE	DESCRIPTION	DATE	APPROVED
		REVISIONS		

ENGINEER OF RECORD: LARRY JONES — PE LICENSE NO. 19837

Fred Wilson & Associates, Inc.
Consulting Engineers
C.A. NO. 7188 • 904-398-8636
3970 Hendricks Avenue • Jacksonville, FL 32207

SIGNATURES		DATE
DESIGNED	L. JONES	6-09
DRAWN	B. GEMMELL	6-09
CHECKED	L. JONES	6-09
SUBMITTED		9/24/09
APPROVED		9/24/09
APPROVED		
APPROVED		
APPROVED		
APPROVED		
APPROVED		

NATIONAL AERONAUTICS AND SPACE ADMINISTRATION
JOHN F. KENNEDY SPACE CENTER, NASA
KENNEDY SPACE CENTER, FLORIDA

REPLACE PROTECTIVE RELAYS AT C5, C5A AND ORSINO SUBSTATIONS WITH SEL RELAYS
TYPICAL TRANSFORMER BREAKER DC SCHEMATIC
ORSINO SUBSTATION

FILE NO. | SIZE F | DWG. NO. 79K38612
PROJ. NO. PCN 98778 | SHEET 21

A/E FILE No. 0601\0601-25\0601-25.4
FILE: E20.DWG
THIS DRAWING PREPARED BY AutoCAD 2008

E20

KSC FORM 1-11A (REV 6/91) (C/G 12/93) | 09/18/2009 | F:\ELECT\0601\0601-25\0601-25.4\E20

NOTICE – WHEN GOVERNMENT DRAWINGS, SPECIFICATIONS, OR OTHER DATA ARE USED FOR ANY PURPOSE OTHER THAN IN CONNECTION WITH A DEFINITELY RELATED GOVERNMENT PROCUREMENT OPERATION, THE UNITED STATES GOVERNMENT THEREBY INCURS NO RESPONSIBILITY NOR ANY OBLIGATION WHATSOEVER; AND THE FACT THAT THE GOVERNMENT MAY HAVE FORMULATED, FURNISHED, OR IN ANY WAY SUPPLIED THE SAID DRAWINGS, SPECIFICATIONS OR OTHER DATA IS NOT TO BE REGARDED BY IMPLICATION OR OTHERWISE AS IN ANY MANNER LICENSING THE HOLDER OR ANY OTHER PERSON OR CORPORATION, OR CONVEYING ANY RIGHTS OR PERMISSION TO MANUFACTURE, USE, OR SELL ANY PATENTED INVENTION THAT MAY IN ANY WAY BE RELATED THERETO.

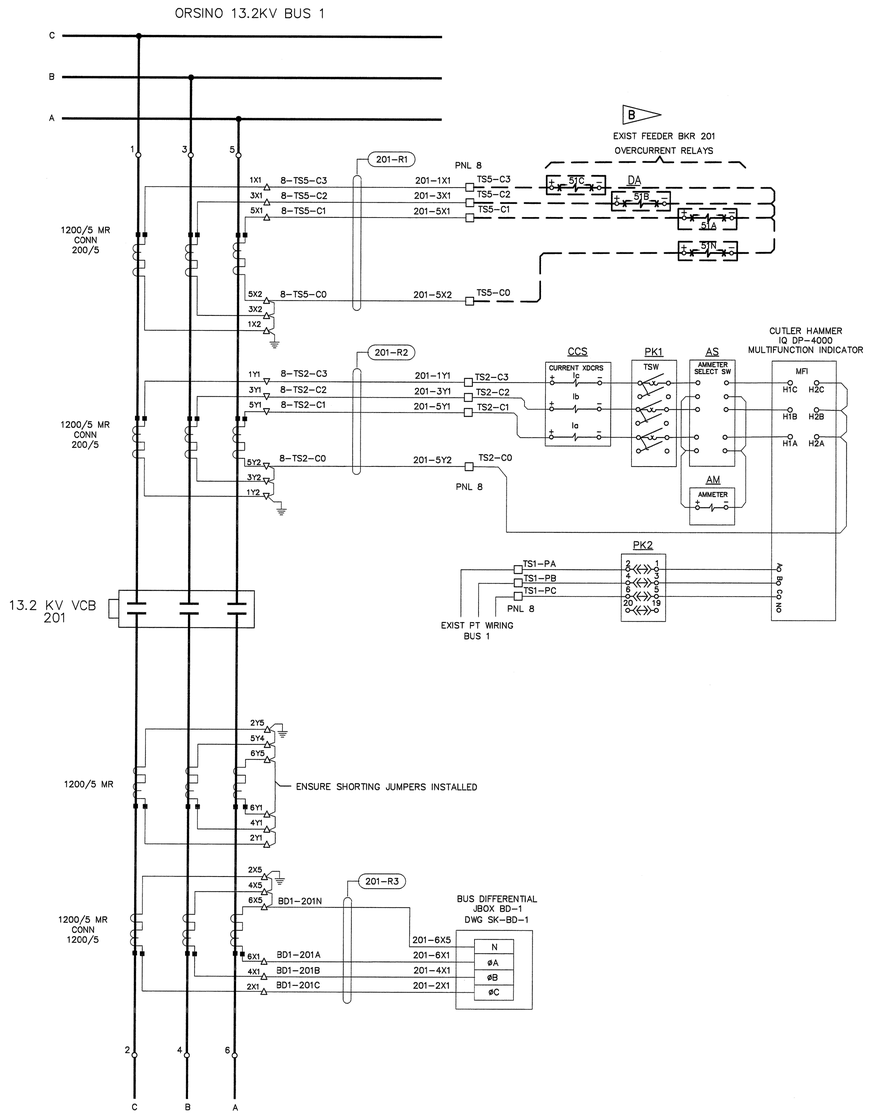

EXISTING AC SCHEMATIC

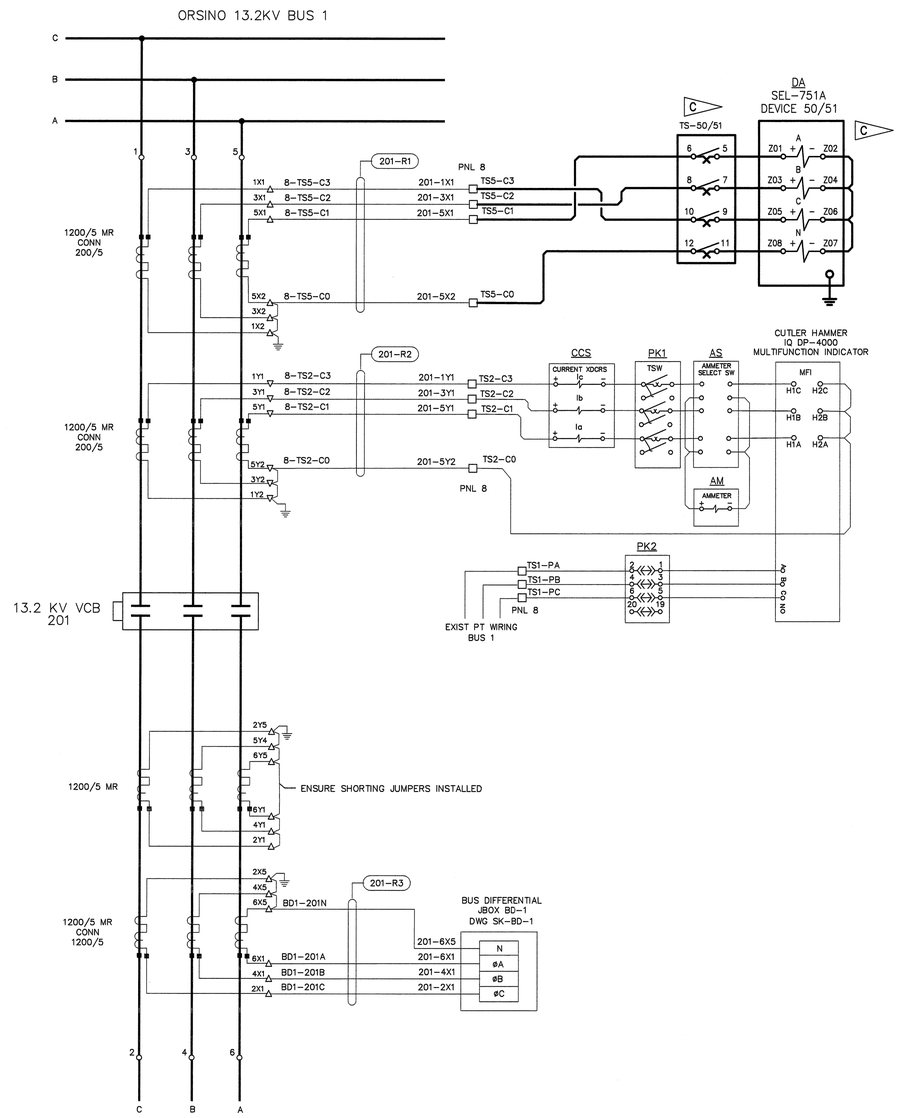

MODIFIED AC SCHEMATIC

SPECIFIC NOTES:

A. FOR LEGEND AND GENERAL NOTES, SEE DRAWING E1.

B. REMOVE EXISTING OVERCURRENT RELAYS IN FEEDER PANELS. CONNECTIONS SHOWN ARE "TYPICAL" FOR ALL STATION FEEDER BREAKERS.

C. FURNISH AND INSTALL NEW SEL 751A RELAYS AND ASSOCIATED TEST SWITCHES IN ALL FEEDER PANEL POSITIONS INDICATED ON THE SINGLE LINE DIAGRAMS.

D. CT RATIOS SHOWN FOR OVERCURRENT RELAYS VARY DEPENDING ON THE CIRCUIT. SEE SHEET E3 FOR THE EXISTING RELAY TYPES AND CT RATIOS USED.

LEGEND

- ○ DEVICE TERMINAL POINT
- △ TERMINAL BLOCK POINTS FOR CTs AT VCBs
- □ TERMINAL BLOCK AT IDENTIFIED CONTROL PANEL
- ◉ SHORTING TYPE TERMINAL BLOCK AT IDENTIFIED CONTROL PANEL

1200/5 BUSHING C.T.		
RATIO	TURNS	TAPS
100/5	20	X2–X3
200/5	40	X1–X2
300/5	60	X1–X3
400/5	80	X4–X5
500/5	100	X8–X4
600/5	120	X2–X4
800/5	160	X1–X4
900/5	180	X8–X5
1000/5	200	X2–X5
1200/5	240	X1–X5

SYM.	ZONE	DESCRIPTION	DATE	APPROVED

REVISIONS

ENGINEER OF RECORD: LARRY JONES — PE LICENSE NO. 19837

Fred Wilson & Associates, Inc.
Consulting Engineers
C.A. NO. 7188 • 904-398-8634
3970 Hendricks Avenue • Jacksonville, FL 32207

SIGNATURES		DATE
DESIGNED	L. JONES	6-09
DRAWN	B. GEMMELL	6-09
CHECKED	L. JONES	6-09
SUBMITTED		9/24/09
APPROVED		9/24/09
APPROVED		
APPROVED		
APPROVED		
APPROVED		
APPROVED		

NATIONAL AERONAUTICS AND SPACE ADMINISTRATION
JOHN F. KENNEDY SPACE CENTER, NASA
KENNEDY SPACE CENTER, FLORIDA

REPLACE PROTECTIVE RELAYS AT C5, C5A AND ORSINO SUBSTATIONS WITH SEL RELAYS

TYPICAL FEEDER BKR. – AC SCHEMATIC
ORSINO SUBSTATION

FILE NO. | SIZE F | DWG. NO. 79K38612

PROJ. NO. PCN 98778 | SHEET 22

A/E FILE No. 0601\0601-25\0601-25.4
FILE: E21.DWG
THIS DRAWING PREPARED BY AutoCAD 2008

E21

NOTICE – WHEN GOVERNMENT DRAWINGS, SPECIFICATIONS, OR OTHER DATA ARE USED FOR ANY PURPOSE OTHER THAN IN CONNECTION WITH A DEFINITELY RELATED GOVERNMENT PROCUREMENT OPERATION, THE UNITED STATES GOVERNMENT THEREBY INCURS NO RESPONSIBILITY NOR ANY OBLIGATION WHATSOEVER; AND THE FACT THAT THE GOVERNMENT MAY HAVE FORMULATED, FURNISHED, OR IN ANY WAY SUPPLIED THE SAID DRAWINGS, SPECIFICATIONS OR OTHER DATA IS NOT TO BE REGARDED BY IMPLICATION OR OTHERWISE IN ANY MANNER LICENSING THE HOLDER OR ANY OTHER PERSON OR CORPORATION, OR CONVEYING ANY RIGHTS OR PERMISSION TO MANUFACTURE, USE, OR SELL ANY PATENTED INVENTION THAT MAY IN ANY WAY BE RELATED THERETO.

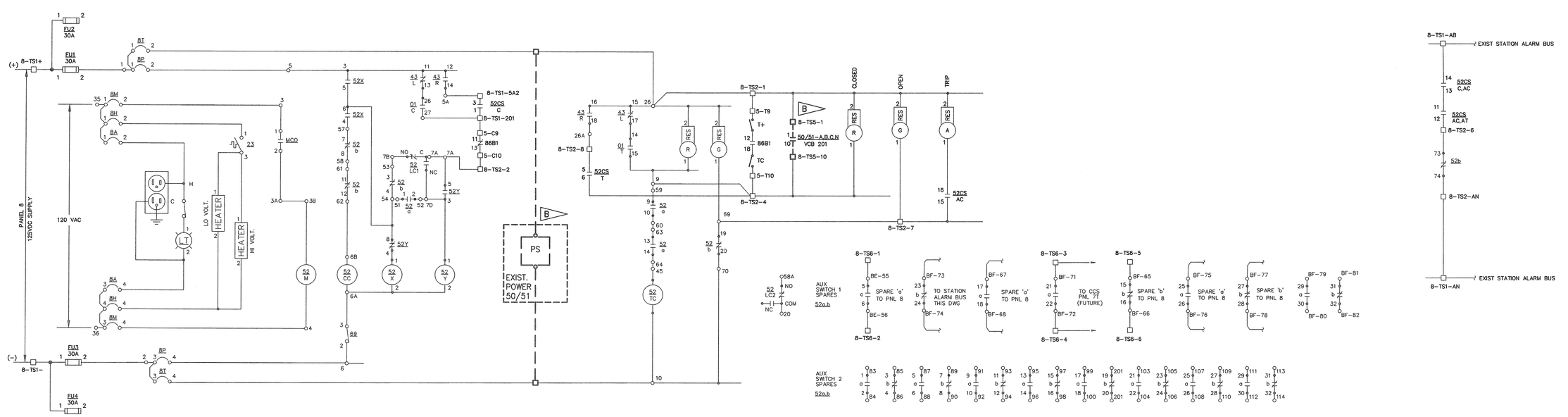

EXISTING 125Vdc CONTROL SCHEMATIC FOR 13.2KV FEEDER BREAKER VCB 201

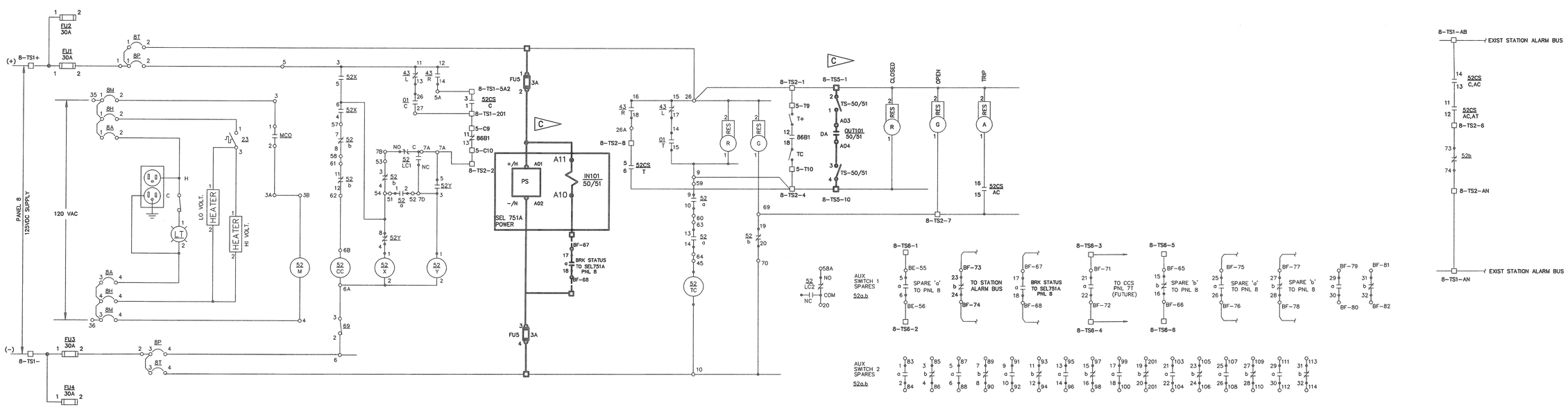

MODIFIED 125Vdc CONTROL SCHEMATIC FOR 13.2KV FEEDER BREAKER VCB 201

SPECIFIC NOTES:

A. FOR LEGEND AND GENERAL NOTES, SEE DRAWING E1.

B. REMOVE EXISTING OVERCURRENT RELAYS AND ASSOCIATED TEST SWITCHES IN FEEDER CONTROL PANELS. CONNECTIONS SHOWN ARE "TYPICAL" FOR ALL STATION FEEDER BREAKERS.

C. FURNISH AND INSTALL NEW SEL 751A RELAYS AND ASSOCIATED TEST SWITCHES IN ALL CONTROL PANEL POSITIONS ASOCIATED WITH BREAKERS INDICATED ON THE STATION ONELINE SCHEMATICS.

SYM.	ZONE	DESCRIPTION	DATE	APPROVED
		REVISIONS		

ENGINEER OF RECORD: LARRY JONES — PE LICENSE NO. 19837

Fred Wilson & Associates, Inc.
Consulting Engineers
C.A. NO. 7188 • 904-398-8636
3970 Hendricks Avenue • Jacksonville, FL 32207

SIGNATURES		DATE
DESIGNED	L. JONES	6-09
DRAWN	B. GEMMELL	6-09
CHECKED	L. JONES	6-09
SUBMITTED		9/24/09
APPROVED		9/24/09
APPROVED		
APPROVED		
APPROVED		
APPROVED		
APPROVED		

NATIONAL AERONAUTICS AND SPACE ADMINISTRATION
JOHN F. KENNEDY SPACE CENTER, NASA
KENNEDY SPACE CENTER, FLORIDA

REPLACE PROTECTIVE RELAYS AT C5, C5A AND ORSINO SUBSTATIONS WITH SEL RELAYS

TYPICAL FEEDER BKR. – DC SCHEMATIC ORSINO SUBSTATION

A/E FILE No. 0601\0601-25\0601-25.4
FILE: E22.DWG
THIS DRAWING PREPARED BY AutoCAD 2008

E22

FILE NO.	SIZE	DWG. NO.
	F	79K38612
PROJ. NO. PCN 98778		SHEET 23

NOTICE – WHEN GOVERNMENT DRAWINGS, SPECIFICATIONS, OR OTHER DATA ARE USED FOR ANY PURPOSE OTHER THAN IN CONNECTION WITH A DEFINITELY RELATED GOVERNMENT PROCUREMENT OPERATION, THE UNITED STATES GOVERNMENT THEREBY INCURS NO RESPONSIBILITY NOR ANY OBLIGATION WHATSOEVER, AND THE FACT THAT THE GOVERNMENT MAY HAVE FORMULATED, FURNISHED, OR IN ANY WAY SUPPLIED THE SAID DRAWINGS, SPECIFICATIONS OR OTHER DATA IS NOT TO BE REGARDED BY IMPLICATION OR OTHERWISE AS IN ANY MANNER LICENSING THE HOLDER OR ANY OTHER PERSON OR CORPORATION, OR CONVEYING ANY RIGHTS OR PERMISSION TO MANUFACTURE, USE, OR SELL ANY PATENTED INVENTION THAT MAY IN ANY WAY BE RELATED THERETO.

SPECIFIC NOTES:

A. FOR LEGEND AND GENERAL NOTES, SEE DRAWING E1.

B. REMOVE EXISTING OVERCURRENT RELAYS IN INSPECTION BUS BREAKER PANELS. CONNECTIONS SHOWN ARE "TYPICAL" FOR ALL INSPECTION BUS BREAKER POSITIONS.

C. FURNISH AND INSTALL NEW SEL 751A RELAYS AND ASSOCIATED TEST SWITCHES IN ALL INSPECTION BUS PANEL POSITIONS INDICATED ON THE SINGLE LINE DIAGRAMS.

D. CT RATIOS SHOWN FOR OVERCURRENT RELAYS VARY DEPENDING ON THE CIRCUIT. SEE SHEET E3 FOR THE EXISTING RELAY TYPES AND CT RATIOS USED.

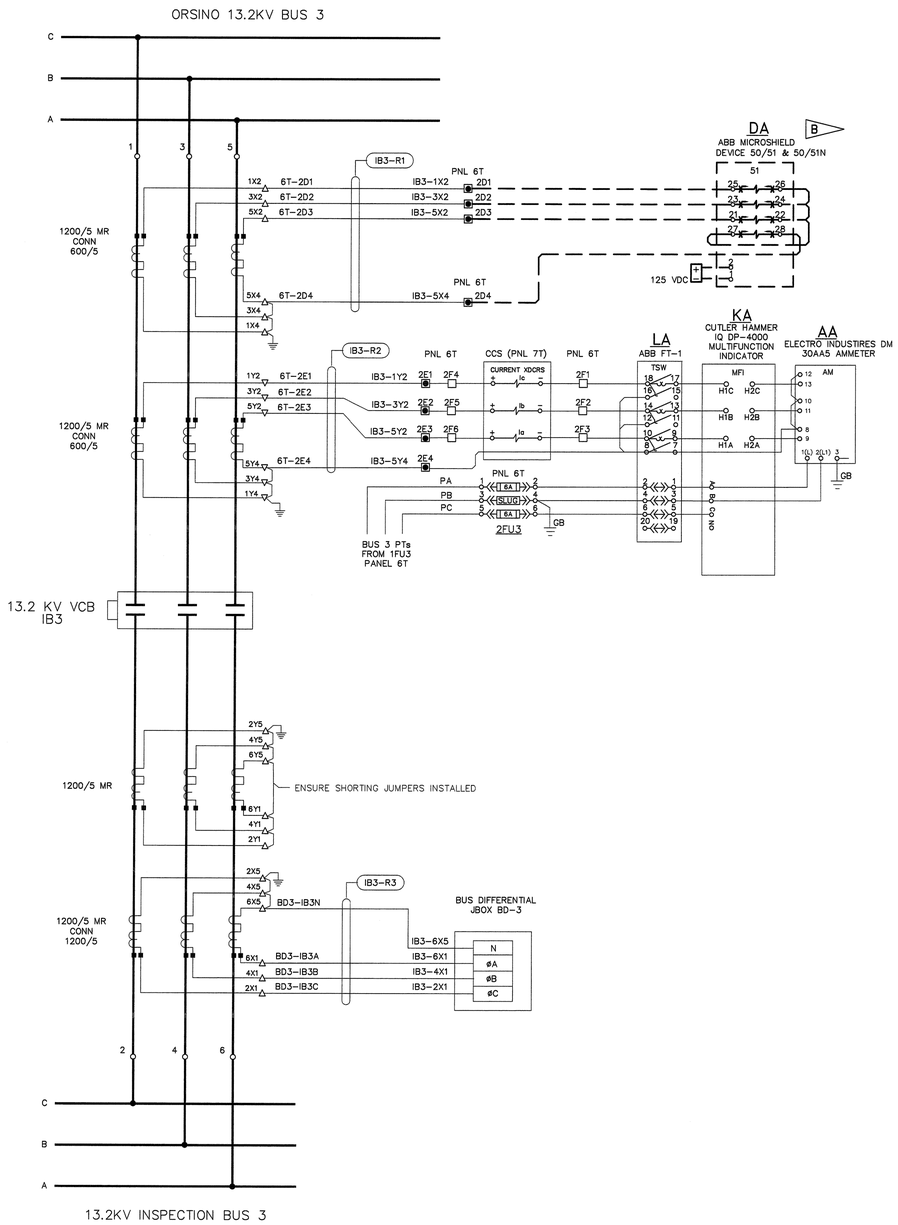

EXISTING AC SCHEMATIC

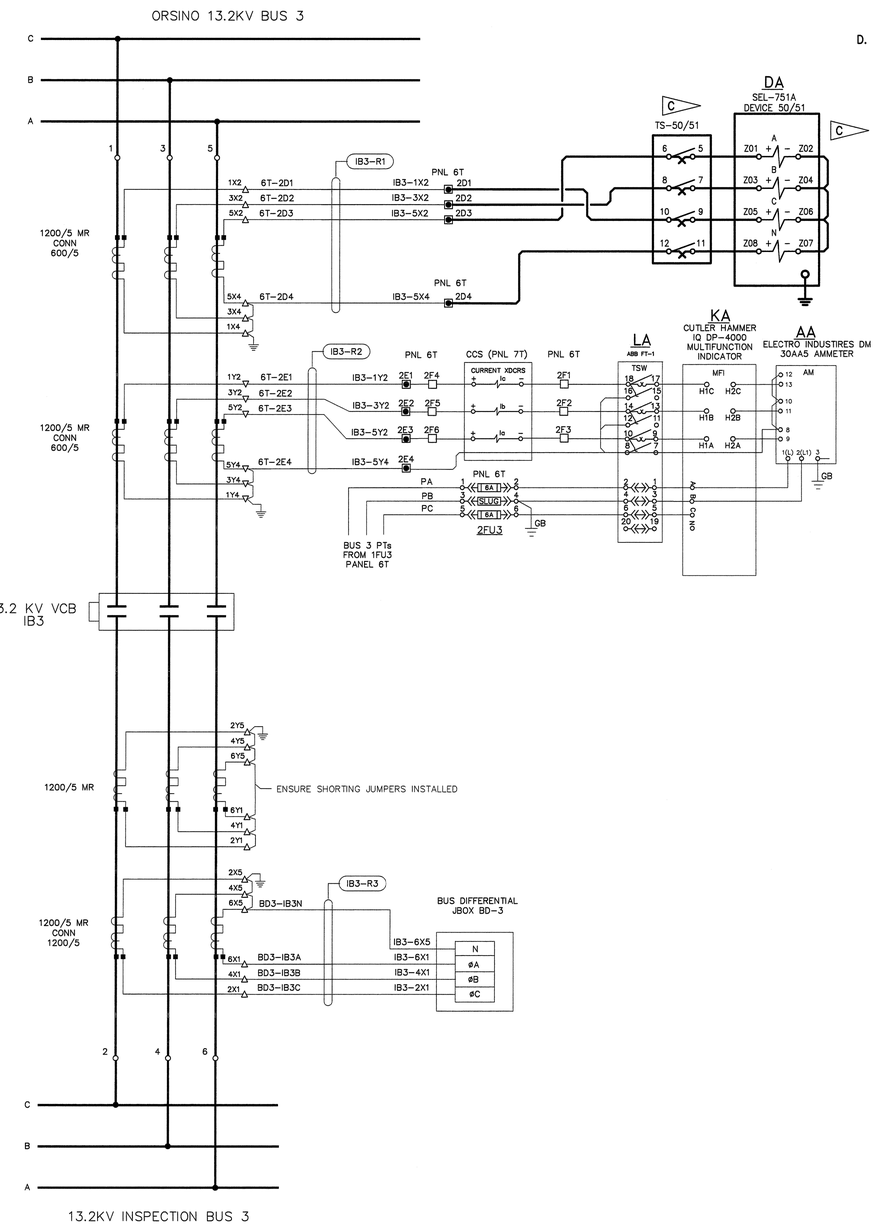

MODIFIED AC SCHEMATIC

LEGEND

- ○ DEVICE TERMINAL POINT
- △ TERMINAL BLOCK POINTS FOR CTs AT VCBs
- □ TERMINAL BLOCK AT IDENTIFIED CONTROL PANEL
- ◉ SHORTING TYPE TERMINAL BLOCK AT IDENTIFIED CONTROL PANEL

1200/5 BUSHING C.T.		
RATIO	TURNS	TAPS
100/5	20	X2–X3
200/5	40	X1–X2
300/5	60	X1–X3
400/5	80	X4–X5
500/5	100	X3–X4
600/5	120	X2–X4
800/5	160	X1–X4
900/5	180	X3–X5
1000/5	200	X2–X5
1200/5	240	X1–X5

SYM.	ZONE	DESCRIPTION	DATE	APPROVED
		REVISIONS		

ENGINEER OF RECORD: LARRY JONES — PE LICENSE NO. 19837

Fred Wilson & Associates, Inc. Consulting Engineers
C.A. NO. 7188 • 904-398-8636
3970 Hendricks Avenue • Jacksonville, FL 32207

SIGNATURES		DATE
DESIGNED	L. JONES	6-09
DRAWN	B. GEMMELL	6-09
CHECKED	L. JONES	6-09
SUBMITTED		9/24/09
APPROVED		9/24/09
APPROVED		
APPROVED		
APPROVED		
APPROVED		
APPROVED		

NATIONAL AERONAUTICS AND SPACE ADMINISTRATION
JOHN F. KENNEDY SPACE CENTER, NASA
KENNEDY SPACE CENTER, FLORIDA

REPLACE PROTECTIVE RELAYS AT C5, C5A AND ORSINO SUBSTATIONS WITH SEL RELAYS

TYPICAL "IB" BREAKER – AC SCHEMATIC
ORSINO SUBSTATION

FILE NO. | SIZE F | DWG. NO. 79K38612

PROJ. NO. PCN 98778 | SHEET 24

A/E FILE No. 0601\0601-25\0601-25.4
FILE: E23.DWG
THIS DRAWING PREPARED BY AutoCAD 2008

E23

NOTICE – WHEN GOVERNMENT DRAWINGS, SPECIFICATIONS, OR OTHER DATA ARE USED FOR ANY PURPOSE OTHER THAN IN CONNECTION WITH A DEFINITELY RELATED GOVERNMENT PROCUREMENT OPERATION, THE UNITED STATES GOVERNMENT THEREBY INCURS NO RESPONSIBILITY NOR ANY OBLIGATION WHATSOEVER; AND THE FACT THAT THE GOVERNMENT MAY HAVE FORMULATED, FURNISHED, OR IN ANY WAY SUPPLIED THE SAID DRAWINGS, SPECIFICATIONS, OR OTHER DATA IS NOT TO BE REGARDED BY IMPLICATION OR OTHERWISE AS IN ANY MANNER LICENSING THE HOLDER OR ANY OTHER PERSON OR CORPORATION, OR CONVEYING ANY RIGHTS OR PERMISSION TO MANUFACTURE, USE, OR SELL ANY PATENTED INVENTION THAT MAY IN ANY WAY BE RELATED THERETO.

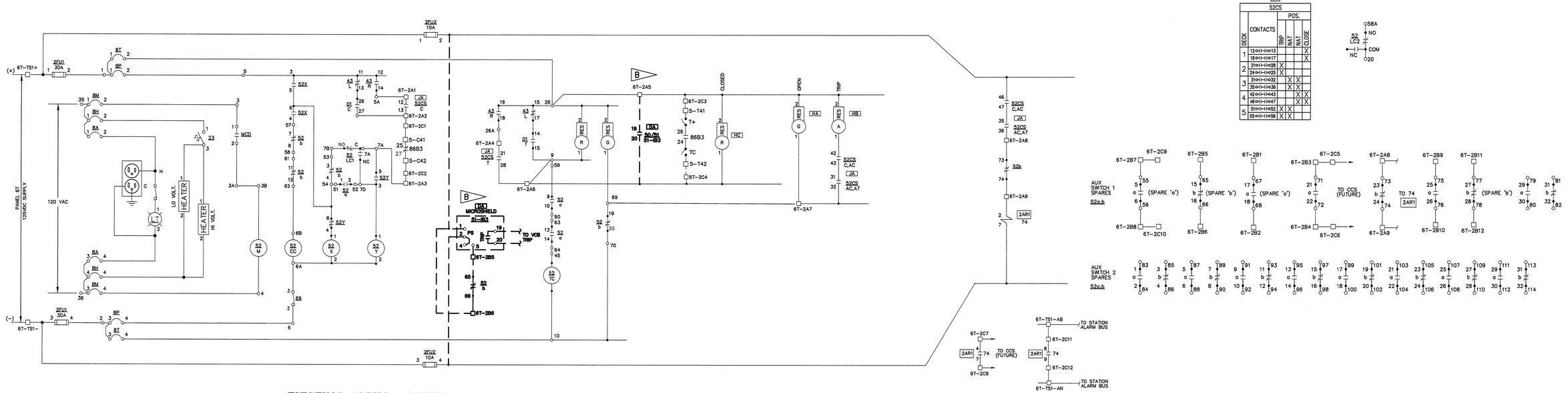

EXISTING 125Vdc CONTROL SCHEMATIC FOR 13.2KV INSPECTION BUS 3 BREAKER IB3

MODIFIED 125Vdc CONTROL SCHEMATIC FOR 13.2KV INSPECTION BUS 3 BREAKER IB3

SPECIFIC NOTES:

A. FOR LEGEND AND GENERAL NOTES, SEE DRAWING E1.

B. REMOVE EXISTING OVERCURRENT RELAYS IN INSPECTION BUS PANELS. CONNECTIONS SHOWN ARE "TYPICAL" FOR ALL INSPECTION BUS BREAKER POSITIONS.

C. FURNISH AND INSTALL NEW SEL 751A RELAYS AND ASSOCIATED TEST SWITCHES IN ALL INSPECTION BUS CONTROL PANEL POSITIONS ASOCIATED WITH BREAKERS INDICATED ON THE SINGLE LINE DIAGRAMS.

SYM.	ZONE	DESCRIPTION	DATE	APPROVED
		REVISIONS		

ENGINEER OF RECORD: LARRY JONES — PE LICENSE NO. 19837

Fred Wilson & Associates, Inc. Consulting Engineers
C.A. NO. 7188 • 904-398-8636
3970 Hendricks Avenue • Jacksonville, FL 32207

SIGNATURES		DATE
DESIGNED	L. JONES	6-09
DRAWN	B. GEMMELL	6-09
CHECKED	L. JONES	6-09
SUBMITTED		9/24/09
APPROVED		9/24/09
APPROVED		
APPROVED		
APPROVED		
APPROVED		
APPROVED		

NATIONAL AERONAUTICS AND SPACE ADMINISTRATION
JOHN F. KENNEDY SPACE CENTER, NASA
KENNEDY SPACE CENTER, FLORIDA

REPLACE PROTECTIVE RELAYS AT C5, C5A AND ORSINO SUBSTATIONS WITH SEL RELAYS

TYPICAL "IB" BREAKER – DC SCHEMATIC ORSINO SUBSTATION

A/E FILE No. 0601\0601-25\0601-25.4
FILE: E24.DWG
THIS DRAWING PREPARED BY AutoCAD 2008

E24

FILE NO. | SIZE F | DWG. NO. 79K38612
PROJ. NO. PCN 98778 | SHEET 25

NOTICE – WHEN GOVERNMENT DRAWINGS, SPECIFICATIONS, OR OTHER DATA ARE USED FOR ANY PURPOSE OTHER THAN IN CONNECTION WITH A DEFINITELY RELATED GOVERNMENT PROCUREMENT OPERATION, THE UNITED STATES GOVERNMENT THEREBY INCURS NO RESPONSIBILITY NOR ANY OBLIGATION WHATSOEVER; AND THE FACT THAT THE GOVERNMENT MAY HAVE FORMULATED, FURNISHED, OR IN ANY WAY SUPPLIED THE SAID DRAWINGS, SPECIFICATIONS OR OTHER DATA IS NOT TO BE REGARDED BY IMPLICATION OR OTHERWISE AS IN ANY MANNER LICENSING THE HOLDER OR ANY OTHER PERSON OR CORPORATION, OR CONVEYING ANY RIGHTS OR PERMISSION TO MANUFACTURE, USE OR SELL ANY PATENTED INVENTION THAT MAY IN ANY WAY BE RELATED THERETO.

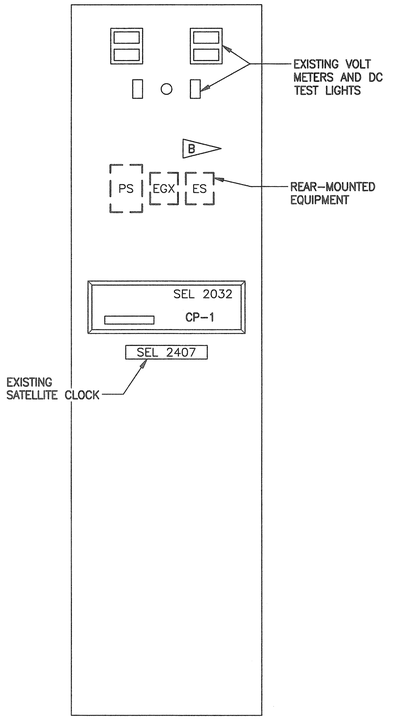

EXISTING FRONT CONTROL PANEL 2 ELEVATION
SCALE: 1½"=1'-0"

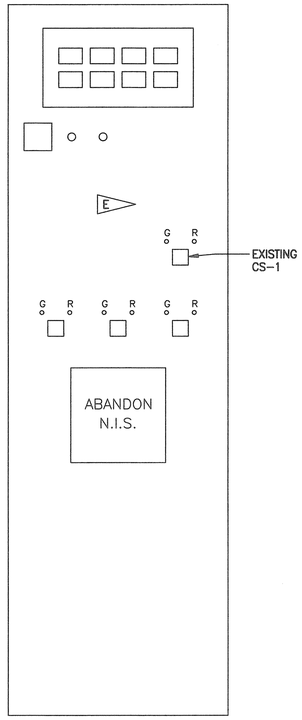

EXISTING FRONT CONTROL PANEL 15A ELEVATION
SCALE: 1½"=1'-0"

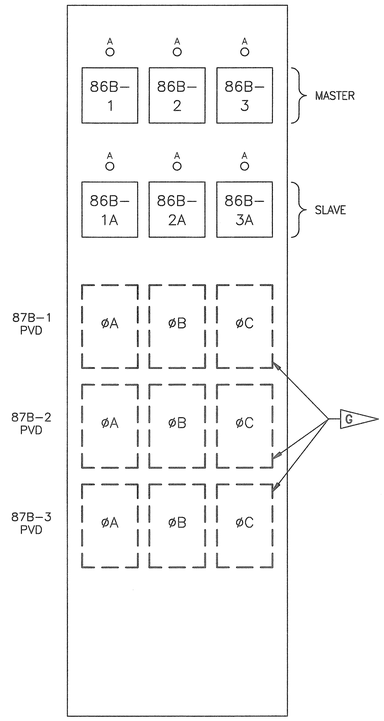

EXISTING REAR CONTROL PANEL 15A ELEVATION
SCALE: 1½"=1'-0"

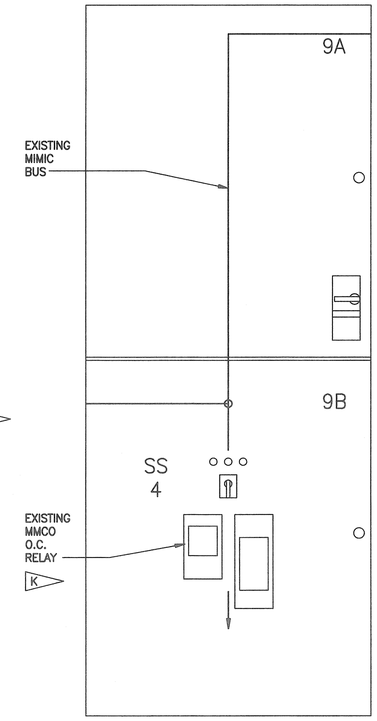

EXISTING FRONT C5A CUB. 9 ELEVATION
SCALE: 1½"=1'-0"

SPECIFIC NOTES:

A. FOR LEGEND AND GENERAL NOTES, SEE DRAWING E1.

B. THE CONTRACTOR SHALL REMOVE THE EXISTING PANEL 2 DOOR AND ASSOCIATED EQUIPMENT AND PROVIDE A NEW PANEL REPLACEMENT DOOR. THE EXISTING PANEL VOLTMETERS, INDICATING LIGHTS, SEL 2407 AND SEL 2032 SHALL BE RE-INSTALLED ON THE NEW PANEL DOOR. THE REAR-MOUNTED EQUIPMENT SHALL BE RETURNED TO THE GOVERNMENT. THE EXISTING DOOR SHALL BE ASSUMED TO CONTAIN PAINT WITH PCB'S AND OTHER HARMFUL CONSTITUENTS. THE CONTRACTOR SHALL TAKE PRECAUTIONS TO PREVENT FLAKING OF THE COATINGS AND PROPERLY DISPOSE OF THE DOOR AT THE KSC LANDFILL.

C. PROVIDE A NEW PANEL 2 DOOR WITH EQUIPMENT MOUNTED AS SHOWN. RE-INSTALL THE EXISTING VOLTMETERS AND INDICATING LIGHTS AND RESTORE THE ORIGINAL WIRING. RE-INSTALL THE EXISTING SEL 2032 (CP-1) AND SEL 2407 DEVICES AND PROVIDE THE NEW SEL 2032 (CP-2) MOUNTED ON THE DOOR AS INDICATED. THE REPLACEMENT DOOR SHALL BE OF THE SAME GAGE AND THICKNESS AS THE EXISTING AND PRIMED AND PAINTED TO MATCH.

D. PROVIDE THE ADDITIONAL COMMUNICATIONS SYSTEM POWER SUPPLIES, PROTOCOL CONVERTERS, ETHERNET SWITCH, CABLING, ETC. AS INDICATED ON SHEET E26. THIS EQUIPMENT SHALL BE MOUNTED ON DIN RAILS INSTALLED IN A LOCATION BELOW THE SEL 2032 PROCESSORS ON THE REAR OF THE DOOR.

E. THE CONTRACTOR SHALL REMOVE THE EXISTING PANEL 15A DOOR AND ASSOCIATED EQUIPMENT AND PROVIDE A NEW PANEL REPLACEMENT DOOR. CONTROL SWITCH CS-1 AND INDICATING LIGHTS SHALL BE REINSTALLED AS SHOWN IN THE MODIFIED FRONT ELEVATION. THE EXISTING DOOR SHALL BE ASSUMED TO CONTAIN PAINT WITH PCB'S AND OTHER HARMFUL CONSTITUENTS. THE CONTRACTOR SHALL TAKE PRECAUTIONS TO PREVENT FLAKING OF THE COATINGS AND PROPERLY DISPOSE OF THE DOOR AT THE KSC LANDFILL.

F. PROVIDE A NEW PANEL 15A DOOR WITH EQUIPMENT MOUNTED AS SHOWN. THE REPLACEMENT DOOR SHALL BE OF THE SAME GAGE AND THICKNESS AS THE EXISTING AND PRIMED AND PAINTED TO MATCH. SEE SHEET E18 FOR THE ASSOCIATED DIFFERENTIAL RELAY WIRING. PROVIDE AN 8-POINT, SELF-CONTAINED ANNUNCIATOR PANEL, QUALITROL/HATHAWAY #4-3-2H-4W-3-1-0-1-000 AND 24V POWER SUPPLY #RT-D-100D-24 (OR APPROVED EQUAL) AND 87B-1, 87B-2 AND 87B-3 TEST SWITCHES, ABB FT-1, STYLE NO.9660A85G01 (OR APPROVED EQUAL).

G. REMOVE THE EXISTING 13.2KV BUS DIFFERENTIAL RELAYS, 87B-1, 87B-2 AND 87B-3, RETURN TO THE GOVERNMENT, AND PROVIDE ⅛" ALUMINUM COVER PLATE AS SHOWN. PRIME AND PAINT TO MATCH EXISTING PANEL COLOR. THE EXISTING 86B LOCKOUT RELAYS ARE TO REMAIN IN SERVICE AND BE RE-CONNECTED AS INDICATED ON SHEET E18.

H. PROVIDE CP-3 AND CP-4 COMMUNICATIONS PROCESSORS (SEL 2032) MOUNTED ON THE FRONT OF THE EXISTING C5A SWITCHGEAR CUBICLE 9A DOOR. PROVIDE A SEL 2407 SATELLITE CLOCK, COAX AND OUTDOOR WALL-MOUNTED ANTENNA SYSTEM. PROVIDE ALL ASSOCIATED COMMUNICATIONS EQUIPMENT, MOUNTED ON THE REAR OF THE DOOR, AND CONNECTIONS AS INDICATED FOR C5A ON SHEET E26.

J. REVISE THE EXISTING RED MIMIC BUS AS INDICATED.

K. REPLACE THE EXISTING MMCO OVERCURRENT RELAY WITH A NEW SEL751A RELAY AND MOUNTING ADAPTER AS REQUIRED. THE CONTRACTOR SHALL PROVIDE AN EYEBOLT TO ATTACH A RELAY HANG TAG (LOTO) ADJACENT TO THE RELAY. RETURN THE MMCO RELAY TO THE GOVERNMENT.

NAMEPLATE SCHEDULE

NAMEPLATE NUMBER	DESCRIPTION 1st LINE	2nd LINE	3rd LINE
NP 1	COMM PROCESSOR	CP-1	–
NP 2	COMM PROCESSOR	CP-2	–
NP 3	87B-1	13.8KV IND. BUS 1	DIFFERENTIAL
NP 4	87B-2	13.8KV IND. BUS 2	DIFFERENTIAL
NP 5	87B-3	13.8KV PRIORITY BUS 3	DIFFERENTIAL
NP 6	87B-1/TS	SEE DETAIL B/–	–
NP 7	87B-2/TS		–
NP 8	87B-3/TS		–
NP 9	COMM PROCESSOR	CP-3	–
NP 10	COMM PROCESSOR	CP-4	–
NP 11	FDR ... 50/51 TS	SEE DETAIL B/–	–
NP 12	50/51N	3 PHASE & GND	–
NP 13	M.O. SWITCH	LBPT4	–

PROVIDE NAMEPLATES FOR NEW EQUIPMENT. NAMEPLATES SHALL BE 1"x3"x1/8" BEVELLED EDGE ENGRAVED WITH 1/4" BLOCK LETTERING AND FABRICATED FROM WHITE PLASTIC LAMINATE OVER A BLACK CORE. FASTEN TO PANEL WITH #6-32 STAINLESS STEEL SCREWS.

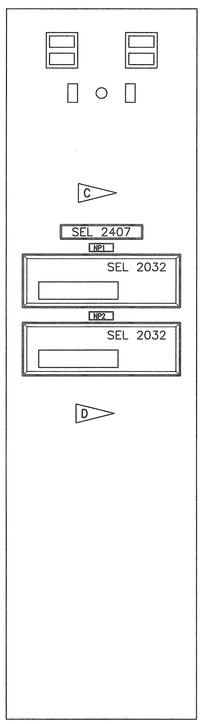

MODIFIED FRONT CONTROL PANEL 2 ELEVATION
SCALE: 1½"=1'-0"

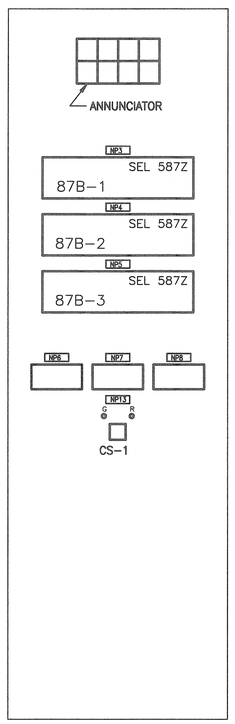

MODIFIED FRONT CONTROL PANEL 15A ELEVATION
SCALE: 1½"=1'-0"

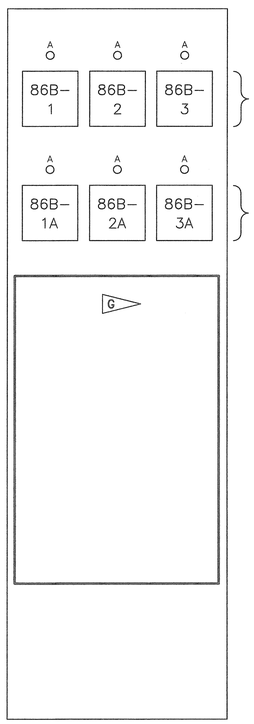

MODIFIED REAR CONTROL PANEL 15A ELEVATION
SCALE: 1½"=1'-0"

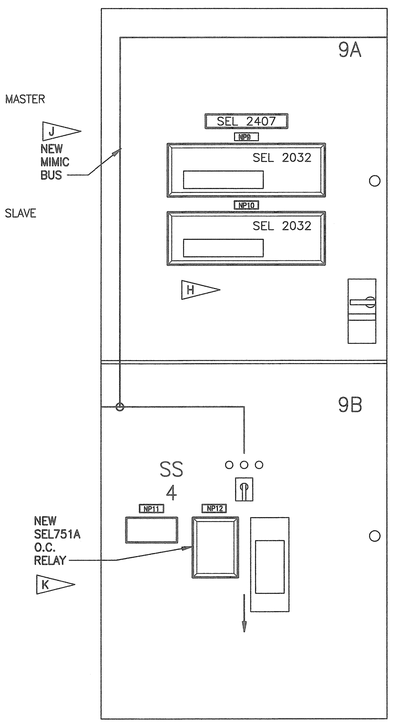

MODIFIED FRONT C5A CUB. 9 ELEVATION
SCALE: 1½"=1'-0"

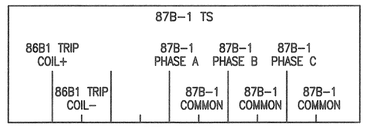

DETAIL NP 6

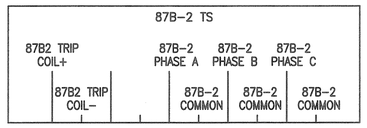

DETAIL NP 7

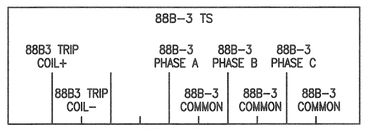

DETAIL NP 8

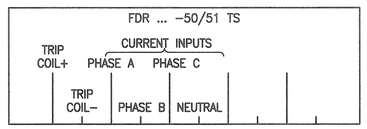

DETAIL NAMEPLATE 11

NAMEPLATE SCHEDULE DETAIL B/–
NOT TO SCALE

GRAPHIC SCALE
1½" = 1'-0" 1' 0' 1' 2'

SYM.	ZONE	DESCRIPTION	DATE	APPROVED
REVISIONS				

ENGINEER OF RECORD: LARRY JONES — PE LICENSE NO. 19837
Fred Wilson & Associates, Inc. Consulting Engineers
C.A. NO. 7188 • 904-398-8636
3970 Hendricks Avenue • Jacksonville, FL 32207

SIGNATURES		DATE
DESIGNED	M. YUDIN	6/09
DRAWN	A. THOMPSON	6/09
CHECKED	L. JONES	6/09
SUBMITTED		9/24/09
APPROVED		9/24/09
APPROVED		
APPROVED		
APPROVED		
APPROVED		
APPROVED		

NATIONAL AERONAUTICS AND SPACE ADMINISTRATION
JOHN F. KENNEDY SPACE CENTER, NASA
KENNEDY SPACE CENTER, FLORIDA

REPLACE PROTECTIVE RELAYS AT C5, C5A AND ORSINO SUBSTATIONS WITH SEL RELAYS

C5 AND C5A PANEL ELEVATIONS

FILE NO. | SIZE F | DWG. NO. 79K38612
PROJ. NO. PCN 98778 | SHEET 26

A/E FILE No. 0601\0601-25\0601-25.4
FILE: E25.DWG
THIS DRAWING PREPARED BY AutoCAD 2005

E25

NOTICE – WHEN GOVERNMENT DRAWINGS, SPECIFICATIONS, OR OTHER DATA ARE USED FOR ANY PURPOSE OTHER THAN IN CONNECTION WITH A DEFINITELY RELATED GOVERNMENT PROCUREMENT OPERATION, THE UNITED STATES GOVERNMENT THEREBY INCURS NO RESPONSIBILITY NOR ANY OBLIGATION WHATSOEVER; AND THE FACT THAT THE GOVERNMENT MAY HAVE FORMULATED, FURNISHED, OR IN ANY WAY SUPPLIED THE SAID DRAWINGS, SPECIFICATIONS, OR OTHER DATA IS NOT TO BE REGARDED BY IMPLICATION OR OTHERWISE AS IN ANY MANNER LICENSING THE HOLDER OR ANY OTHER PERSON OR CORPORATION, OR CONVEYING ANY RIGHTS OR PERMISSION TO MANUFACTURE, USE, OR SELL ANY PATENTED INVENTION THAT MAY IN ANY WAY BE RELATED THERETO.

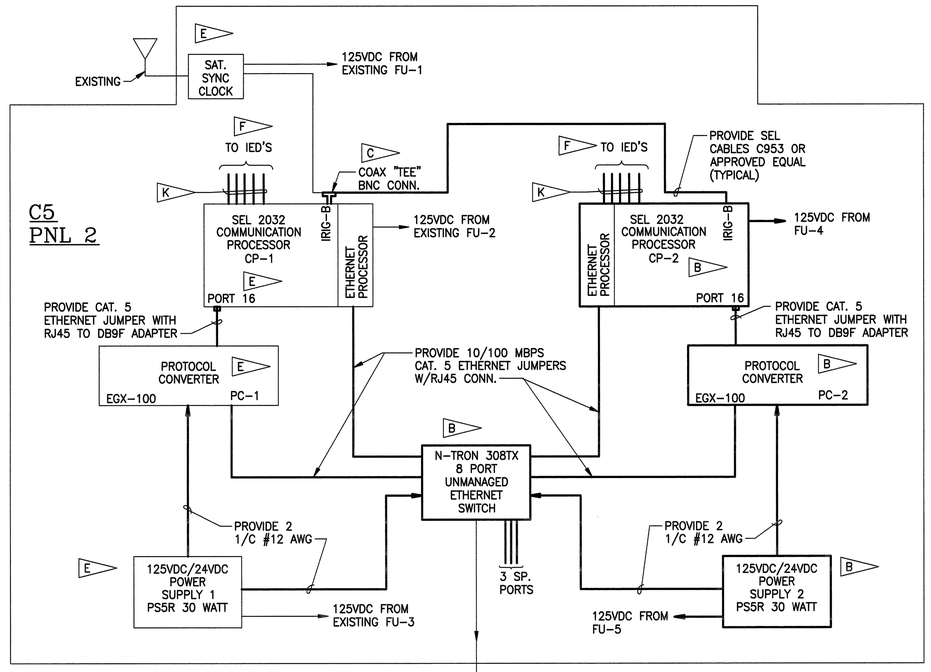

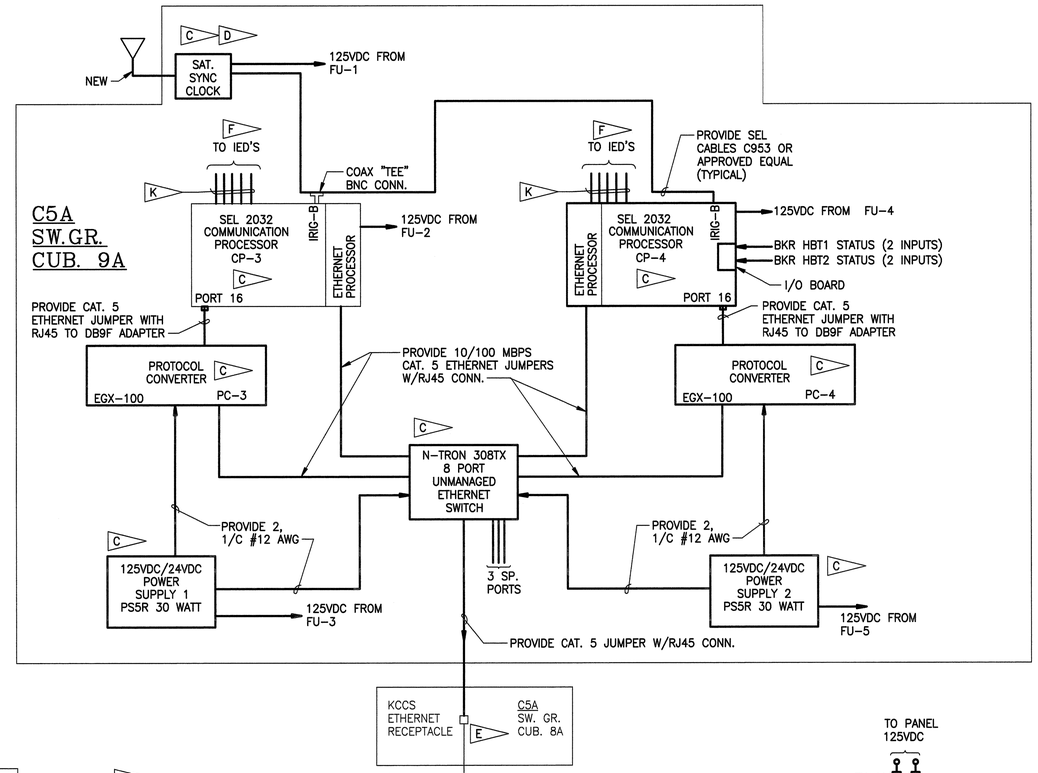

C5/C5A COMMUNICATIONS SYSTEM DIAGRAM

NOT TO SCALE

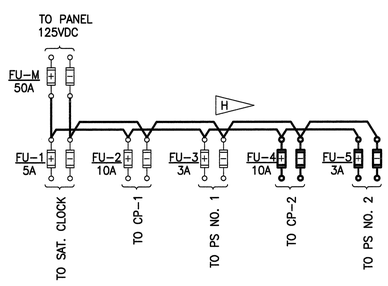

C5 125V DC POWER WIRING DETAIL

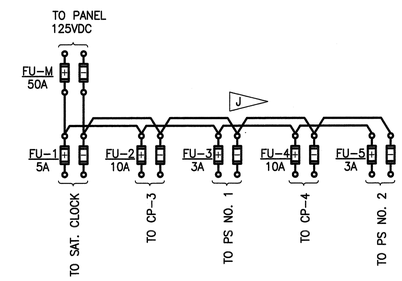

C5A 125V DC POWER WIRING DETAIL

SPECIFIC NOTES:

A. FOR LEGEND AND GENERAL NOTES, SEE DRAWING E1.

B. EQUIPMENT TO BE PROVIDED IN PANEL "2" IN C5 CONTROL ROOM.

C. EQUIPMENT TO BE PROVIDED IN SWITCHGEAR CUBICLE 9A IN C5A CONTROL ROOM.

D. PROVIDE NEW SEL 2407 SATELLITE-SYNCHRONIZED CLOCK, MOUNT EXTERNAL ANTENNA, AND RG-6 COAX.

E. EXISTING EQUIPMENT

F. SEE IED PORT ASSIGNMENT TABLE. CONTRACTOR SHALL PROVIDE SERIAL CABLES AND DB9 CONNECTORS REQUIRED BETWEEN EACH IED (PROTECTIVE RELAY) AND THE ASSOCIATED PROCESSOR.

G. INTEGRATION OF THE RELAYS AND COMMUNICATIONS PROCESSORS WITH THE CURRENT KCCS (CITECT) SYSTEM SHALL BE DONE BY SCHWEITZER ENGINEERING IN COORDINATION WITH THE CONTRACTOR'S PROJECT SPECIALIST. THE GOVERNMENT WILL PROVIDE THE REQUIRED DATA POINT LIST FOR ALL RELAYS AND SAMPLE SEL2032 SETTING FILES.

H. PROVIDE WIRING AND FUSES FU-4 AND FU-5 IN C5 PANEL 2. RE-WIRE EXISTING FUSES FU-1, FU-2 AND FU-3 TO EQUIPNMENT AS REQUIRED.

J. PROVIDE ALL FUSES AND WIRING TO EQUIPMENT MOUNTED IN C5A, CUBICLE 9A.

K. THE CONTRACTOR SHALL PROVIDE THE FOLLOWING SCHWEITZER COMPONENTS FOR THE CONNECTION OF THE RELAYS TO THE COMMUNICATION PROCESSOR:
SEL PART NUMBER SEL-030-0175 (C273A) CABLE
SEL PART NUMBER SEL-9025) DB-9-P (CONNECTOR AT EACH END
SEL PART NUMBER SEL-144-1000 SHIELD TO SHELL CONNECTOR (ONE END ONLY)

SEL 2032 COMMUNICATIONS PROCESSOR PORT ASSIGNMENT TABLE – C5 AND C5A SUBSTATION DEVICES

	DB9 PORT NUMBER															
PROC. NO.	1	2	3	4	5	6	7	8	9	10	11	12	13	14	15	16
CP-1	TS8	T8 (1)	50BF1 (2) *	IB1	605	CT1	609	619	BT1	617	520	611	CT2	615	IB2	PC-1
CP-2	IB	618	614	518	612	TIE PU	13KV BD1 (3)	13KV BD2 (3)	13KV BD3 (3)	SP	SP	SP	SP	SP	SP	PC-2
CP-3	TS9 *	T9 (1) *	CT4	SP BKR.	517	601	610	620	613	SS4	TIE BKR	50BF2 (2) *	SP	SP	SP	PC-3
CP-4	TS10 *	T10 (1) *	CT5	606	608	SP. BKR.	607	604	616	SS5	50BF3 (2)*	115KV BDC (3)*	SP	SP	SP	PC-4

NOTE: RELAYS BEING INSTALLED ON THE BREAKERS INDICATED ABOVE ARE SEL751A, PROVIDED UNDER "MODIFY C-5 SUBSTATION FOR RING BUS CONFIGURATION", EXCEPT AS INDICATED.

1. – SEL-787 TRANSF. DIFF. RELAY
2. – SEL-501 BREAKER FAIL RELAY
3. – SEL 587Z BUS DIFF. RELAYS

SP -- SPARE PORT
"*" ---- RELAYS BEING INSTALLED UNDER "MODIFY C-5 SUBSTATION FOR RING BUS CONFIGURATION"

SYM.	ZONE	DESCRIPTION	DATE	APPROVED
		REVISIONS		

ENGINEER OF RECORD: LARRY JONES — PE LICENSE NO. 19837
Fred Wilson & Associates, Inc. Consulting Engineers
C.A. NO. 7188 • 904-398-8636
3970 Hendricks Avenue • Jacksonville, FL 32207

SIGNATURES		DATE
DESIGNED	L. JONES	7-09
DRAWN	B. GEMMELL	7-09
CHECKED	L. JONES	7-09
SUBMITTED	B. Gemmell	9/24/09
APPROVED	L. Jones	9/24/09
APPROVED		
APPROVED		
APPROVED		
APPROVED		
APPROVED		

NATIONAL AERONAUTICS AND SPACE ADMINISTRATION
JOHN F. KENNEDY SPACE CENTER, NASA
KENNEDY SPACE CENTER, FLORIDA

REPLACE PROTECTIVE RELAYS AT C5, C5A AND ORSINO SUBSTATIONS WITH SEL RELAYS

C5/C5A COMMUNICATIONS SYSTEM DIAGRAM

FILE NO. | SIZE F | DWG. NO. 79K38612
PROJ. NO. PCN 98778 | SHEET 27

A/E FILE No. 0601\0601-25\0601-25.4
FILE: E26.DWG
THIS DRAWING PREPARED BY AutoCAD 2008

E26

KSC FORM 1-11A (REV 6/91) (C/G 12/93) 09/24/2009 F:\ELECT\0601\0601-25\0601-25.4\E26

NOTICE – WHEN GOVERNMENT DRAWINGS, SPECIFICATIONS, OR OTHER DATA ARE USED FOR ANY PURPOSE OTHER THAN IN CONNECTION WITH A DEFINITELY RELATED GOVERNMENT PROCUREMENT OPERATION, THE UNITED STATES GOVERNMENT THEREBY INCURS NO RESPONSIBILITY NOR ANY OBLIGATION WHATSOEVER, AND THE FACT THAT THE GOVERNMENT MAY HAVE FORMULATED, FURNISHED, OR IN ANY WAY SUPPLIED THE SAID DRAWINGS, SPECIFICATIONS OR OTHER DATA IS NOT TO BE REGARDED BY IMPLICATION OR OTHERWISE IN ANY MANNER LICENSING THE HOLDER OR ANY OTHER PERSON OR CORPORATION, OR CONVEYING ANY RIGHTS OR PERMISSION TO MANUFACTURE, USE, OR SELL ANY PATENTED INVENTION THAT MAY IN ANY WAY BE RELATED THERETO.

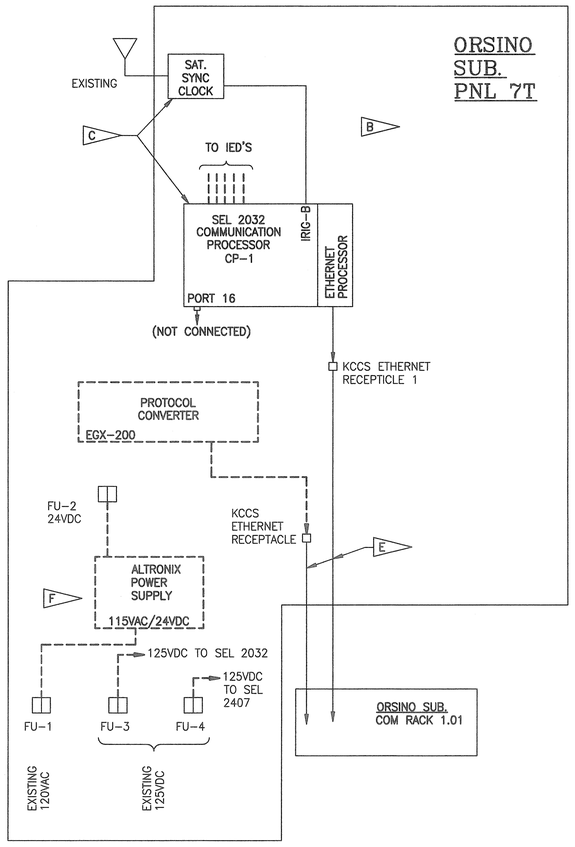

EXISTING ORSINO COMMUNICATIONS SYSTEM DIAGRAM

NOT TO SCALE

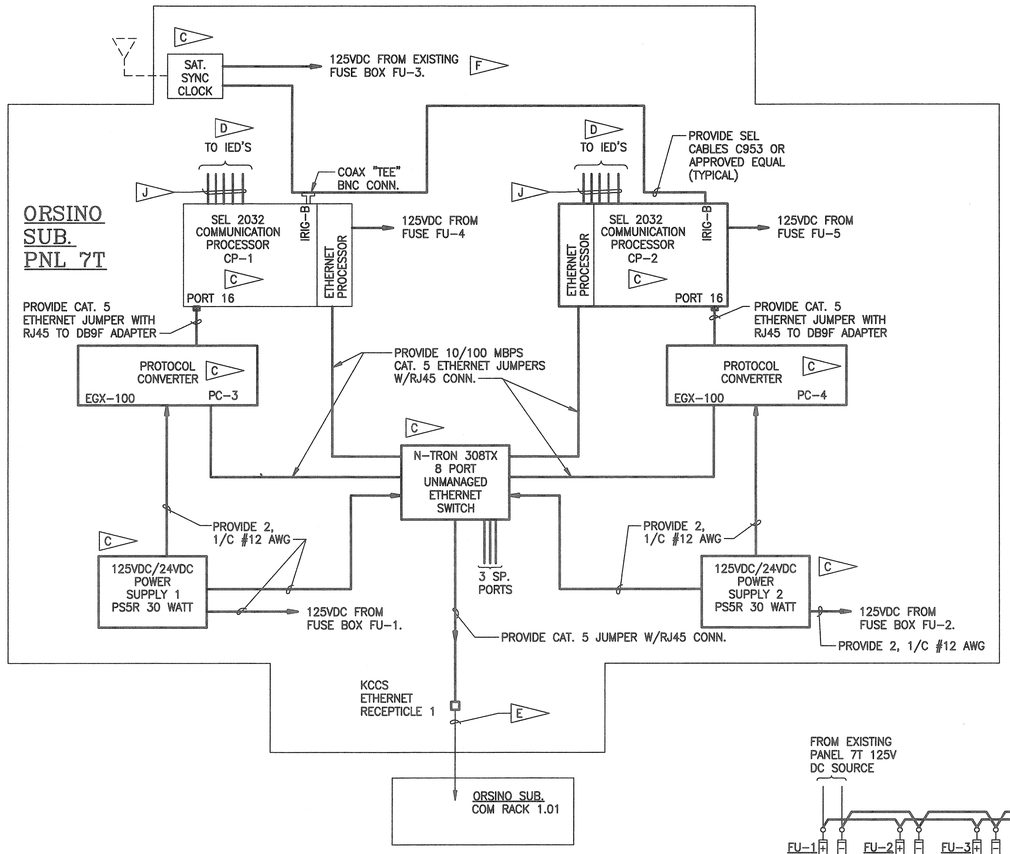

MODIFIED ORSINO COMMUNICATIONS SYSTEM DIAGRAM G

NOT TO SCALE

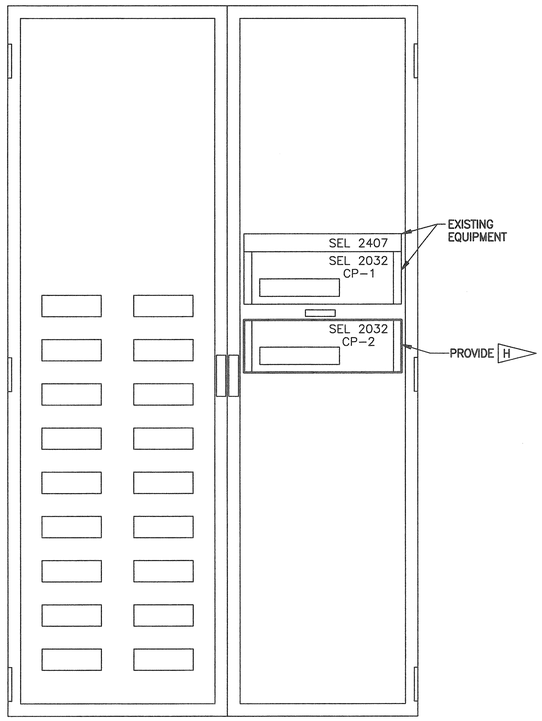

PANEL 7T FRONT ELEVATION

NOT TO SCALE

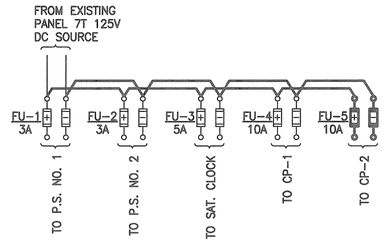

125V DC POWER WIRING DETAIL

SPECIFIC NOTES:

A. FOR LEGEND AND GENERAL NOTES, SEE DRAWING E1.

B EXISTING EQUIPMENT TO BE REMOVED FROM PANEL "7T" IN ORSINO CONTROL ROOM.

C EQUIPMENT TO BE PROVIDED IN PANEL 7T. NOTE THAT EXISTING COMMUNICATIONS PROCESSOR CP-1 AND THE SATELLITE SYNC CLOCK ARE TO REMAIN. SEE PANEL 7T FRONT ELEVATION DETAIL.

D SEE IED PORT ASSIGNMENT TABLE. CONTRACTOR SHALL PROVIDE SERIAL CABLES AND DB9 CONNECTORS REQUIRED BETWEEN EACH IED (PROTECTIVE RELAY) AND THE ASSOCIATED PROCESSOR.

E EXISTING ETHERNET CABLES TO REMAIN.

F REMOVE AND DISCONNECT ALTRONIX POWER SUPPLY AND RETURN TO THE GOVERNMENT. REMOVE AC AND DC CONNECTIONS TO EXISTING FUSES FU-1, FU-2, FU-3 & FU-4. PROVIDE FU-5 AND RE-WIRE ALL FUSE BLOCKS FOR 125VDC POWER TO EQUIPMENT AS SHOWN IN THE 125VDC POWER WIRING DETAIL.

G INTEGRATION OF THE RELAYS AND COMMUNICATIONS PROCESSORS WITH THE CURRENT KCCS (CITECT) SYSTEM SHALL BE DONE BY SCHWEITZER ENGINEERING IN COORDINATION WITH THE CONTRACTOR'S PROJECT SPECIALIST. THE GOVERNMENT WILL PROVIDE THE REQUIRED DATA POINT LIST FOR ALL RELAYS AND SAMPLE SEL2032 SETTING FILES.

H THE CONTRACTOR SHALL DISCONNECT AND REMOVE THE SUBSTATION FAULT RECORDER EQUIPMENT, UNUSED RACK UNITS AND ALL OF THE ASSOCIATED CABLING PRIOR TO INSTALLING THE SECOND SEL2032 AND THE ASSOCIATED NETWORK INTERFACE EQUIPMENT.

J THE CONTRACTOR SHALL PROVIDE THE FOLLOWING SCHWEITZER COMPONENTS FOR THE CONNECTION OF THE RELAYS TO THE COMMUNICATION PROCESSOR:
SEL PART NUMBER SEL-030-0175 (C273A) CABLE
SEL PART NUMBER SEL-9025) DB-9-P (CONNECTOR AT EACH END
SEL PART NUMBER SEL-144-1000 SHIELD TO SHELL CONNECTOR (ONE END ONLY)

SEL 2032 COMMUNICATIONS PROCESSOR PORT ASSIGNMENT TABLE – ORSINO SUBSTATION DEVICES

	DB9 PORT NUMBER															
PROC. NO.	1	2	3	4	5	6	7	8	9	10	11	12	13	14	15	16
CP-1	T1(1) *	T2(1) *	T3(1) *	50BF1(2) *	50BF2(2) *	50BF3(2) *	115KV BDC (3)*	TS1	TS2	TS3	101	102	103	IB1	IB2	PC-1
CP-2	201	202/203	204/205	206	207	208	209	211	212	213	214	215	BT1-2	BT2-3	IB3	PC-2

NOTE: PROVIDE NEW SEL751A RELAYS AND SEL C273 CABLE INTERCONNECTIONS TO THE COM PROCESSOR PORTS AS INDICATED IN THE TABLE.

1. – SEL-387 TRANSF. DIFF. RELAY
2. – SEL-501 BREAKER FAIL RELAY
3. – SEL 587Z BUS DIFF. RELAYS

"*" ---------- EXISTING RELAYS. CONTRACTOR SHALL REMOVE EXISTING F/O CABLE INTERFACE AND F/O CABLE CONNECTIONS BETWEEN RELAYS AND THE COMMUNICATIONS PROCESSOR, AND RETURN TO THE GOVERNMENT. THE CONTRACTOR SHALL PROVIDE NEW SEL C273A CABLE CONNECTIONS BETWEEN THE EXISTING RELAYS AND THE ASSIGNED COM PROCESSOR PORT.

SYM.	ZONE	DESCRIPTION	DATE	APPROVED
		REVISIONS		

ENGINEER OF RECORD: LARRY JONES — PE LICENSE NO. 19837
Fred Wilson & Associates, Inc. Consulting Engineers
C.A. NO. 7188 • 904-398-8636
3970 Hendricks Avenue • Jacksonville, FL 32207

SIGNATURES		DATE
DESIGNED	L. JONES	7-09
DRAWN	B. GEMMELL	7-09
CHECKED	L. JONES	7-09
SUBMITTED		9/24/09
APPROVED		9/24/09
APPROVED		
APPROVED		
APPROVED		
APPROVED		
APPROVED		

NATIONAL AERONAUTICS AND SPACE ADMINISTRATION
JOHN F. KENNEDY SPACE CENTER, NASA
KENNEDY SPACE CENTER, FLORIDA

REPLACE PROTECTIVE RELAYS AT C5, C5A AND ORSINO SUBSTATIONS WITH SEL RELAYS

ORSINO COMMUNICATIONS SYSTEM DIAGRAM

A/E FILE No. 0601\0601-25\0601-25.4
FILE: E27.DWG
THIS DRAWING PREPARED BY AutoCAD 2008

E27

FILE NO.	SIZE	DWG. NO.
	F	79K38612
PROJ. NO. PCN 98778		SHEET 28

NOTICE – WHEN GOVERNMENT DRAWINGS, SPECIFICATIONS, OR OTHER DATA ARE USED FOR ANY PURPOSE OTHER THAN IN CONNECTION WITH A DEFINITELY RELATED GOVERNMENT PROCUREMENT OPERATION, THE UNITED STATES GOVERNMENT THEREBY INCURS NO RESPONSIBILITY NOR ANY OBLIGATION WHATSOEVER; AND THE FACT THAT THE GOVERNMENT MAY HAVE FORMULATED, FURNISHED, OR IN ANY WAY SUPPLIED THE SAID DRAWINGS, SPECIFICATIONS OR OTHER DATA IS NOT TO BE REGARDED BY IMPLICATION OR OTHERWISE IN ANY MANNER LICENSING THE HOLDER OR ANY OTHER PERSON OR CORPORATION, OR CONVEYING ANY RIGHTS OR PERMISSION TO MANUFACTURE, USE, OR SELL ANY PATENTED INVENTION THAT MAY IN ANY WAY BE RELATED THERETO.

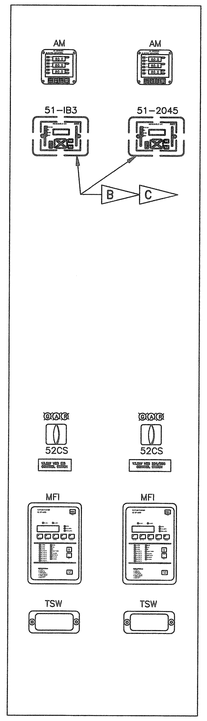

EXISTING FRONT ELEVATION
TYPICAL BKR CONT'L PNL
ORSINO CONTROL PANEL 6T
NOT TO SCALE

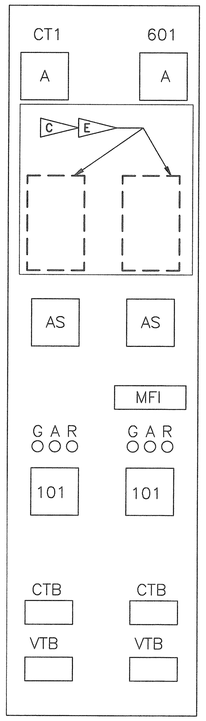

EXISTING FRONT ELEVATION
TYPICAL BKR CONT'L PNL
C5 CONTROL PANEL 6
NOT TO SCALE

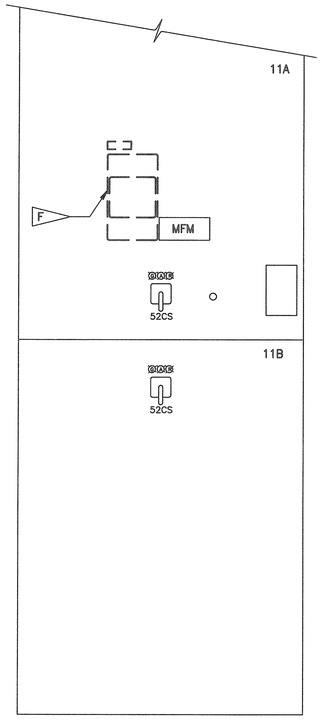

EXISTING FRONT ELEVATION
TYPICAL BKR CONT'L PNL
(C5A CUBICLE 11)
NOT TO SCALE

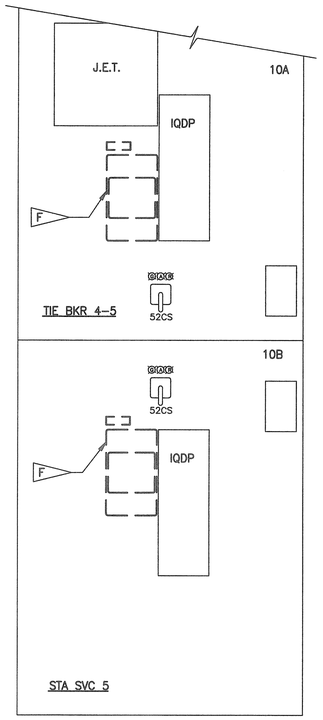

EXISTING FRONT ELEVATION
TYPICAL TIE & SS BKR CONT'L PNL
(C5A CUBICLE 10)
NOT TO SCALE

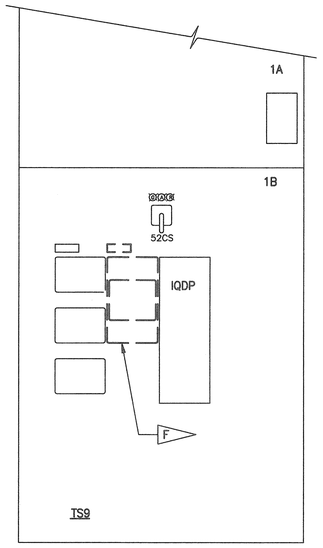

EXISTING FRONT ELEVATION
TYPICAL MAIN BKR CONT'L PNL
(C5A CUBICLE 1)
NOT TO SCALE

NAMEPLATE SCHEDULE G

NAMEPLATE NUMBER	DESCRIPTION 1st LINE	2nd LINE	3rd LINE
NP 1	50/51	FEEDER IB3	–
NP 2	50/51	FEEDER 204/205	–
NP 3	FDR IB3 50/51 TS	SEE DETAIL F/–	–
NP 4	FDR 204/205 50/51 TS		–
NP 5	50/51	FEEDER CT1	–
NP 6	50/51	FEEDER 609	–
NP 7	FDR CT1 50/51 TS	SEE DETAIL F/–	–
NP 8	FDR 609 50/51 TS		–
NP 9	FDR 616 50/51 TS		–
NP 10	50/51	FEEDER 616	–
NP 11	TIE BKR 4-5 50/51 TS	SEE DETAIL C/–	–
NP 12	50/51	TIE BKR 4-5	–
NP 13	STA SVC 5 50/51 TS	SEE DETAIL D/–	–
NP 14	50/51	STA SVC 5 BKR	–
NP 15	MAIN BKR TS9 50/51 TS	SEE DETAIL E/–	–
NP 16	50/51	MAIN BKR TS9	–

H

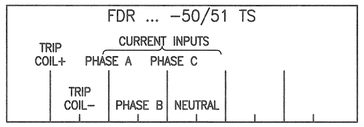

DETAIL NAMEPLATES 3, 4, 7-9

NAMEPLATE SCHEDULE DETAIL F/–
NOT TO SCALE

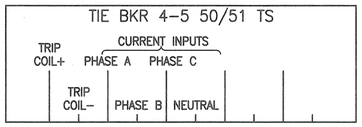

DETAIL NAMEPLATE 11

NAMEPLATE SCHEDULE DETAIL C/–
NOT TO SCALE

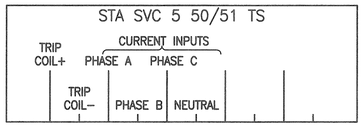

DETAIL NAMEPLATE 13

NAMEPLATE SCHEDULE DETAIL D/–
NOT TO SCALE

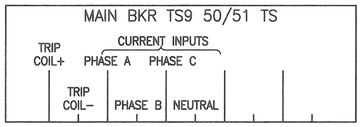

DETAIL NAMEPLATE 15

NAMEPLATE SCHEDULE DETAIL E/–
NOT TO SCALE

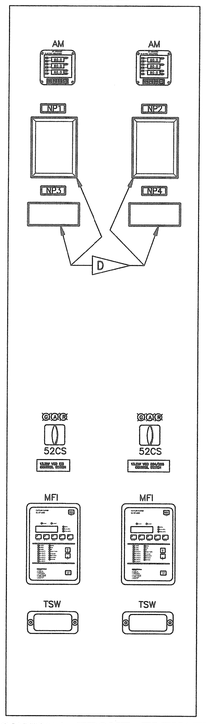

MODIFIED FRONT ELEVATION
TYPICAL BKR CONT'L PNL
ORSINO CONTROL PANEL 6T
NOT TO SCALE

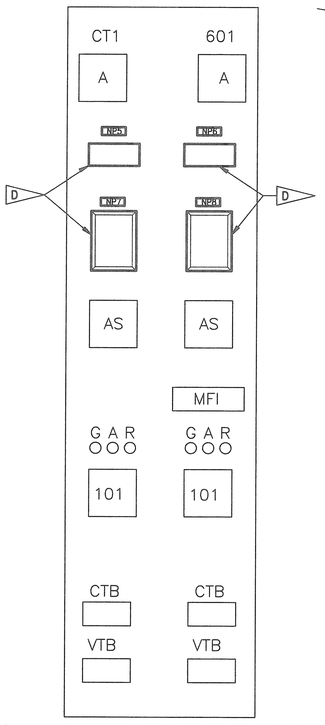

MODIFIED FRONT ELEVATION
TYPICAL BKR CONT'L PNL
C5 CONTROL PANEL 6
NOT TO SCALE

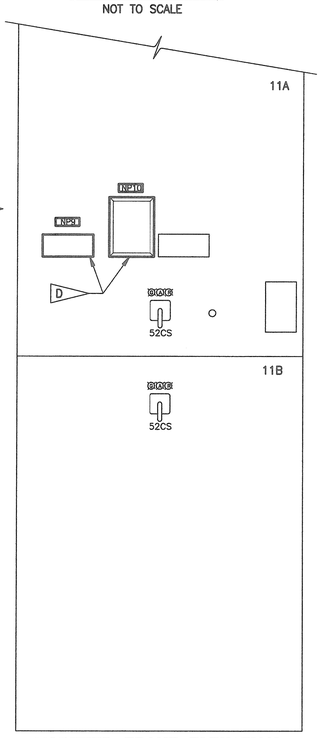

MODIFIED FRONT ELEVATION
TYPICAL BKR CONT'L PNL
(C5A CUBICLE 11A)
NOT TO SCALE

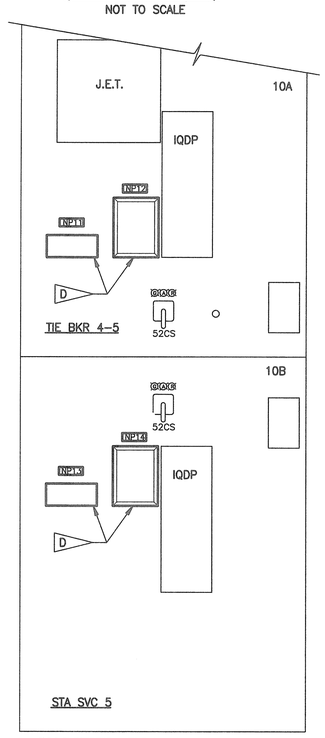

MODIFIED FRONT ELEVATION
TYPICAL TIE & SS BKR CONT'L PNL
(C5A CUBICLES 10A & 10B)
NOT TO SCALE

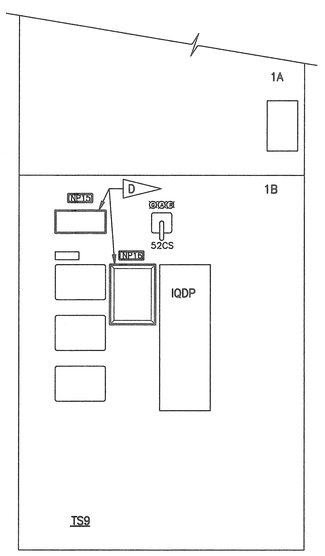

MODIFIED FRONT ELEVATION
TYPICAL MAIN BKR CONT'L PNL
(C5A CUBICLE 1B)
NOT TO SCALE

SPECIFIC NOTES:

A. FOR LEGEND AND GENERAL NOTES, SEE DRAWING E1.

B. REPLACE THE EXISTING MICROSHIELD RELAYS ON ORSINO BREAKER CONTROL PANELS 2, 2T 4, 4T, 6T AND 10 WITH SEL-751A RELAYS, APPLICABLE RETROFIT KITS AND TEST SWITCHES. REPLACE THE EXISTING MMCO RELAYS ON THE REMAINDER OF THE ORSINO BREAKER CONTROL PANELS WITH SEL-751A RELAYS.

C. DISCONNECT EXISTING WIRING AND REMOVE EQUIPMENT.

D. PROVIDE SEL-751A RELAYS AND ASSOCIATED TEST SWITCHES AND RECONNECT WIRING AS SHOWN ON THE A.C. AND D.C. SCHEMATIC DIAGRAMS. TEST SWITCHES SHALL BE ABB TYPE FT-1, 10 POLE. THE CONTRACTOR SHALL ALSO PROVIDE AN EYEBOLT TO ATTACH A RELAY HANG TAG (LOTO) ADJACENT TO THE RELAY.

E. REPLACE THE EXISTING KCGG RELAYS ON C5 BREAKER CONTROL PANELS 3, 4, 6, 8, 9, 11, 12, 14 AND 16-19 WITH SEL-751A RELAYS, APPLICABLE RETROFIT KITS AND TEST SWITCHES.

F. REPLACE THE EXISTING MMCO RELAYS ON C5A BREAKER CONTROL PANELS WITH SEL-751A RELAYS, APPLICABLE RETROFIT KITS AND TEST SWITCHES.

G. PROVIDE NAMEPLATES FOR NEW EQUIPMENT. NAMEPLATES SHALL BE 1"x3"x1/8" WITH BEVELLED EDGE, ENGRAVED WITH 1/4" BLOCK LETTERING AND FABRICATED FROM WHITE PLASTIC LAMINATE OVER A BLACK CORE. FASTEN TO PANEL WITH #6-32 STAINLESS STEEL SCREWS.

H. NAMEPLATES SHOWN ARE APPLICABLE TO THE DEVICES SHOWN ON THIS DRAWING. FOR OTHER RELAY NAMEPLATES, ADJUST FEEDER DESIGNATIONS FOR THE RESPECTIVE MAIN, FEEDER OR STATION SERVICE BREAKER. FOR OTHER TEST SWITCH NAMEPLATES, ADJUST MAIN TITLE TO THE APPLICABLE BREAKER DESIGNATION.

SYM.	ZONE	DESCRIPTION	DATE	APPROVED

REVISIONS

ENGINEER OF RECORD: LARRY JONES — PE LICENSE NO. 19837

Fred Wilson & Associates, Inc.
Consulting Engineers
C.A. NO. 7188 • 904-398-8636
3970 Hendricks Avenue • Jacksonville, FL 32207

SIGNATURES	DATE
DESIGNED M. YUDIN	6/09
DRAWN A. THOMPSON	6/09
CHECKED L. JONES	6-09
SUBMITTED	9/24/09
APPROVED	9/24/09
APPROVED	
APPROVED	
APPROVED	
APPROVED	
APPROVED	

NATIONAL AERONAUTICS AND SPACE ADMINISTRATION
JOHN F. KENNEDY SPACE CENTER, NASA
KENNEDY SPACE CENTER, FLORIDA

REPLACE PROTECTIVE RELAYS AT C5, C5A AND ORSINO SUBSTATIONS WITH SEL RELAYS

MISCELLANEOUS PANEL ELEVATIONS

A/E FILE No. 0601\0601-25\0601-25.4
FILE: E28.DWG
THIS DRAWING PREPARED BY AutoCAD 2005

E28

FILE NO. | SIZE F | DWG. NO. 79K38612

PROJ. NO. PCN 98778 | SHEET 29 OF 29