NOTICE – WHEN GOVERNMENT DRAWINGS, SPECIFICATIONS, OR OTHER DATA ARE USED FOR ANY PURPOSE OTHER THAN IN CONNECTION WITH A DEFINITELY RELATED GOVERNMENT PROCUREMENT OPERATION, THE UNITED STATES GOVERNMENT THEREBY INCURS NO RESPONSIBILITY NOR ANY OBLIGATION WHATSOEVER; AND THE FACT THAT THE GOVERNMENT MAY HAVE FORMULATED, FURNISHED, OR IN ANY WAY SUPPLIED THE SAID DRAWINGS, SPECIFICATIONS OR OTHER DATA IS NOT TO BE REGARDED BY IMPLICATION OR OTHERWISE IN ANY MANNER LICENSING THE HOLDER OR ANY OTHER PERSON OR CORPORATION, OR CONVEYING ANY RIGHTS OR PERMISSION TO MANUFACTURE, USE, OR SELL ANY PATENTED INVENTION THAT MAY IN ANY WAY BE RELATED THERETO.

NATIONAL AERONAUTICS AND SPACE ADMINISTRATION
JOHN F. KENNEDY SPACE CENTER
REPLACE FEEDERS AND DUCTS, VAB AREA NORTH
PCN – 98778

INDEX OF DRAWINGS

DWG. NO.	SHEET NO.	REVISION	TITLE
V1	1		VICINITY MAP, LOCATION MAP AND INDEX OF DRAWINGS
V2	2		GENERAL NOTES AND LEGEND
E1	3		EXISTING ONE LINE DIAGRAM SHEET 1
E2	4		EXISTING ONE LINE DIAGRAM SHEET 2 AND EXISTING CABLE SCHEDULE
E3	5		MODIFIED ONE LINE DIAGRAM SHEET 1
E4	6		MODIFIED ONE LINE DIAGRAM SHEET 2 AND NEW CABLE SCHEDULE
E5	7		SITE PLAN – C5 SUBSTATION
E6	8		SITE PLAN AREA 1
E7	9		SITE PLAN AREA 2
E8	10		SITE PLAN AREA 3
E9	11		MANHOLE LAYOUTS SHEET 1
E10	12		MANHOLE LAYOUTS SHEET 2
E11	13		MANHOLE LAYOUTS SHEET 3
E12	14		MANHOLE LAYOUTS SHEET 4
E13	15		MANHOLE LAYOUTS SHEET 5
E14	16		MANHOLE LAYOUTS SHEET 6
E15	17		MANHOLE LAYOUTS SHEET 7
E16	18		MISCELLANEOUS DETAILS SHEET 1
E17	19		MISCELLANEOUS DETAILS SHEET 2
E18	20		SITE PLAN AREA 4
E19	21		SITE PLAN AREA 5

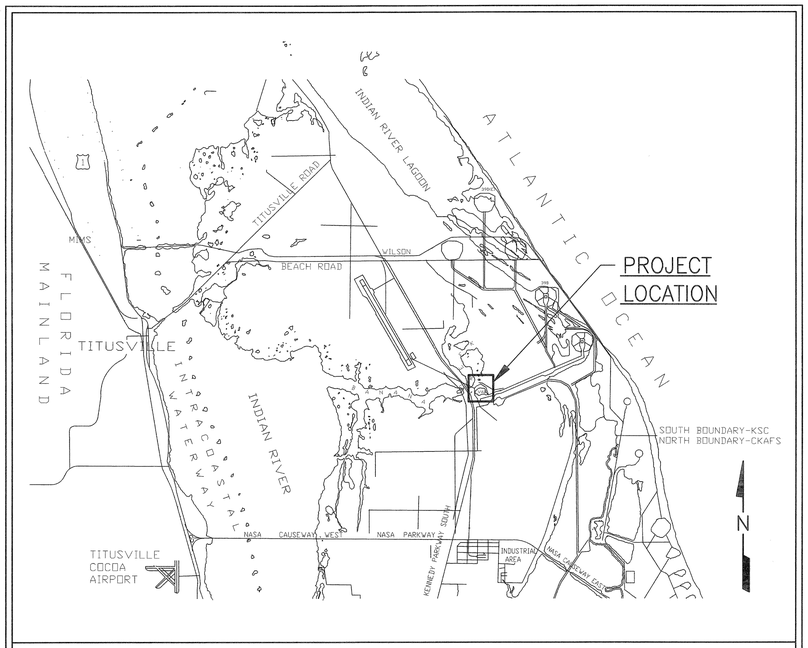

VICINITY MAP

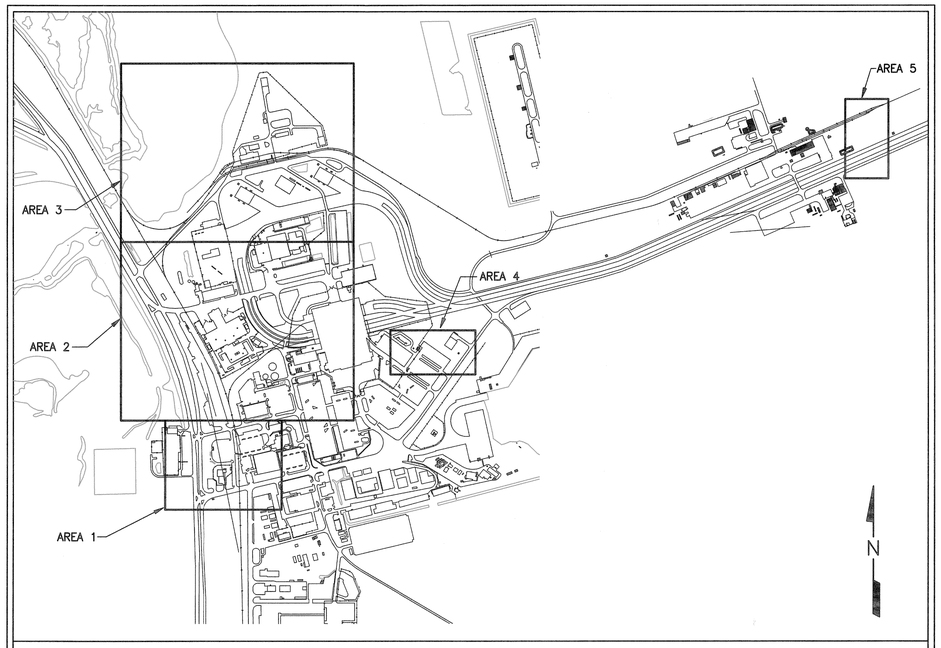

PROJECT LOCATION MAP

THIS IS A METRIC PROJECT

CONDUIT EQUIVALENTS
FROM NEC TABLE 300.1(C)

METRIC DESIGNATOR	TRADE SIZE	METRIC DESIGNATOR	TRADE SIZE
12	3/8	63	2 1/2
16	1/2	78	3
21	3/4	91	3 1/2
27	1	103	4
35	1 1/4	127	5
41	1 1/2	155	6
53	2		

NOTE: THE METRIC DESIGNATORS AND TRADE SIZES ARE FOR IDENTIFICATION PURPOSES ONLY AND ARE NOT ACTUAL DIMENSIONS

PROVIDE SHALL MEAN FURNISH AND INSTALL
TECHNICAL SPECIFICATION– 79K38609

Prepared By:

Fred Wilson & Associates, Inc.
Consulting Engineers
C.A. NO. 7188 • 904-398-8636
3970 Hendricks Avenue • Jacksonville, FL 32207

NASA KSC Export Control Office (ECO)
Export/SBU Determination Record
EDDR#_____

TITLE OF DOCUMENT:				
SENSITIVE BUT UNCLASSIFIED (SBU) INSTRUCTIONS: This item must be reviewed under the requirements for "Sensitive But Unclassified Information" as described in NPR 1600.1, Chapter 5.24 http://nodis3.gsfc.nasa.gov/main_lib.html				
	Yes	No	SBU Reviewer's Signature	Date
Document contains SBU?		✓	Ernesto T. Camecho	9/29/09
EXPORT CONTROL (EC) INSTRUCTIONS: If the document includes export-controlled data, contact your directorate Export Control Representative or the KSC ECO Help Desk (867-9209) for a determination of the proper export category. http://exportcontrol.ksc.nasa.gov/index.cfm				
ECO Reviewer's Name and Organization			ECO Reviewer's Signature	Date
Ernesto T. Camecho, TA-1338			Ernesto T. Camecho	9/29/09
	EXPORT DETERMINATION (☑ one box only)			
EAR 99 NLR	☑		The information contained in the document is technical in content, but is not technical data as defined by the ITAR or the EAR, and therefore is EAR 99 NLR (no export license required). (General Prohibition Six (Embargo) applies to all items subject to the EAR, i.e. items on the CCL and within EAR 99 NLR. You may not make an export or re-export contrary to the provisions of part 746 (Embargos and Other Special Controls) of the EAR and 22 CFR part 126.1 of the ITAR.)	
EAR Controlled	☐		This document is within the purview of the Export Administration Regulations (EAR), 15 CFR 730–774, and is export controlled. It may not be transferred to foreign nationals in the U.S. or abroad without specific approval of a knowledgeable NASA export control official, and/or unless an export license or license exception is obtained/available from the Bureau of Industry and Security, United States Department of Commerce. *Violations of these regulations are punishable by fine, imprisonment, or both.*	
ITAR Controlled	☐		This document contains information which falls under the purview of the U.S. Munitions List (USML), as defined in the International Traffic in Arms Regulations (ITAR), 22 CFR 120–130, and is export controlled. It shall not be transferred to foreign nationals, in the U.S. or abroad, without specific approval of a knowledgeable NASA export control official, and/or unless an export license or license exemption is obtained/available from the United States Department of State. *Violations of these regulations are punishable by fine, imprisonment, or both.*	

(Stamp Revision: (05-19-2009))

SYM.	ZONE	DESCRIPTION	DATE	APPROVED

REVISIONS

ENGINEER OF RECORD: W. WILSON — PE License No. 22283

Fred Wilson & Associates, Inc.
Consulting Engineers
C.A. NO. 7188 • 904-398-8636
3970 Hendricks Avenue • Jacksonville, FL 32207

SIGNATURES		DATE
DESIGNED	V. KELEMEN	4/09
DRAWN	V. KELEMEN	4/09
CHECKED	H. OBERN	5/09
SUBMITTED	[signature]	9/29/09
APPROVED	[signature]	9/29/09
APPROVED	E.T. Camecho	9/29/09
APPROVED		
APPROVED		
APPROVED		
APPROVED		

NATIONAL AERONAUTICS AND SPACE ADMINISTRATION
JOHN F. KENNEDY SPACE CENTER, NASA
KENNEDY SPACE CENTER, FLORIDA

REPLACE FEEDERS AND DUCTS
VAB AREA NORTH

VICINITY MAP, LOCATION MAP AND INDEX OF DRAWINGS

FILE NO.	SIZE	DWG. NO.	
	F	79K38608	–
PROJ. NO. 98778		SHEET 1 OF 21	

A/E FILE No. 0601\0601-25\0601-25.1
FILE: COVER.DWG
THIS DRAWING PREPARED BY AutoCAD 2008

V1

NOTICE – WHEN GOVERNMENT DRAWINGS, SPECIFICATIONS, OR OTHER DATA ARE USED FOR ANY PURPOSE OTHER THAN IN CONNECTION WITH A DEFINITELY RELATED GOVERNMENT PROCUREMENT OPERATION, THE UNITED STATES GOVERNMENT THEREBY INCURS NO RESPONSIBILITY NOR ANY OBLIGATION WHATSOEVER; AND THE FACT THAT THE GOVERNMENT MAY HAVE FORMULATED, FURNISHED, OR IN ANY WAY SUPPLIED THE SAID DRAWINGS, SPECIFICATIONS, OR OTHER DATA IS NOT TO BE REGARDED BY IMPLICATION OR OTHERWISE AS IN ANY MANNER LICENSING THE HOLDER OR ANY OTHER PERSON OR CORPORATION, OR CONVEYING ANY RIGHTS OR PERMISSION TO MANUFACTURE, USE, OR SELL ANY PATENTED INVENTION THAT MAY IN ANY WAY BE RELATED THERETO.

GENERAL NOTES

1. ALL ELECTRICAL WORK AND MATERIAL, UNLESS NOTED AS EXISTING OR GOVERNMENT FURNISHED, IS NEW AND SHALL BE PROVIDED BY THE CONTRACTOR.
2. UNLESS OTHERWISE INDICATED, PROVIDE SHALL MEAN TO FURNISH AND INSTALL.
3. THE CONTRACTOR SHALL EXERCISE CAUTION WHEN EXCAVATING. UNDERGROUND UTILITIES MAY EXIST WHICH ARE NOT INDICATED ON THE DRAWINGS. EXACT LOCATION OF BURIED UTILITIES SHALL BE NOTED BY THE CONTRACTOR ON "AS–BUILT" DRAWINGS.
4. THE CONTRACTOR SHALL EXERCISE EXTREME CAUTION DURING CABLE INSTALLATION AND SPLICING IN THE EXISTING MANHOLES. MANHOLES CONTAIN ENERGIZED CIRCUITS (13.8KV & 600V) THAT MUST REMAIN IN SERVICE. ANY REQUIRED OUTAGES SHALL BE COORDINATED WITH THE GOVERNMENT.
5. CONTRACTOR SHALL CONTACT THE CONTRACTING OFFICER PRIOR TO ALL VLF TESTS OF CABLE.
6. 15KV CABLE SHALL NOT BE PUT ON THE GROUND AT ANY TIME DURING HANDLING OR INSTALLATION.
7. NO OUTAGES OF FACILITIES SHALL BE PERMITTED UNLESS APPROVED BY CONTRACTING OFFICER. CONTRACTOR SHALL NOTIFY CONTRACTING OFFICER 14 DAYS PRIOR TO DESIRED DATE FOR OUTAGE. FOR LOADS SERVED BY DOUBLE–ENDED SUBSTATIONS, ONLY ONE SET OF FEEDER CABLES SHALL BE REMOVED AT A TIME FROM SERVICE TO ACCOMPLISH THE REMOVAL AND REPLACEMENT OF THE FEEDER CABLES. THE AFFECTED LOADS WILL BE SERVED BY CLOSING THE TIE–BREAKER OF THE DOUBLE–ENDED SUBSTATION AND OPENING THE MAIN BREAKER OF THE INCOMING FEEDER CABLE THAT IS BEING REPLACED. CONTRACTING OFFICER AND ISC SHALL PROVIDE SWITCHING TO DIVERT POWER AND DE–ENERGIZE A FEEDER PRIOR TO REMOVAL OF ANY CABLE.
8. THE GOVERNMENT TO SUPPLY GENERATOR SUPPORT. CONTRACTOR SHALL NOTIFY CONTRACTING OFFICER 14 DAYS PRIOR TO DESIRED DAY FOR GENERATOR SUPPORT.
9. UNDERGROUND UTILITIES HAVE BEEN LOCATED BY REFERRING TO ALL KNOWN RECORD DRAWINGS, BY CONFERRING WITH PUBLIC WORKS PERSONNEL TOPOGRAPHIC SURVEY BY VISUAL OBSERVATIONS ALONG THE ROUTE AND BY THE USE OF UNDERGROUND LOCATORS. OTHER UNDERGROUND UTILITIES NOT FOUND OR SHOWN MAY BE PRESENT. THE LOCATIONS OF UTILITIES SHOWN ARE TO BE CONSIDERED APPROXIMATE ONLY, AND THE DRAWINGS SHALL NOT BE SCALED TO DETERMINE LOCATIONS. CONTRACTOR SHALL BE RESPONSIBLE FOR ALL UNDERGROUND UTILITIES INDICATED AND SHALL USE EXTREME CAUTION WHEN EXCAVATING.
10. THIS IS A DESIGN REFRESH PROJECT. MANHOLE INVESTIGATIONS WERE PERFORMED FOR THE ORIGINAL DESIGN PROJECT TO DETERMINE CABLE ROUTING AND TYPE. THERE HAS BEEN NO MANHOLE INVESTIGATION FOR THE DESIGN REFRESH. FW&A HAS CONSULTED WITH EG&G HIGH VOLTAGE SHOP PERSONEL AND CONSTRUCTION INSPECTORS TO VERIFY ACCURACY OF CABLE ROUTING ON THESE DRAWINGS. CONTRACTOR SHALL VERIFY CABLE ROUTING AND CIRCUIT NUMBERS PRIOR TO PERFORMING ANY WORK ON THAT CABLE.
11. UNLESS OTHERWISE INDICATED, ALL DIMENSIONS ARE IN MILLIMETERS.
12. AS A RESULT OF PAST CABLE REPLACEMENT PROJECTS, IT HAS BEEN DETERMINED THAT MANY OF THE PULLING EYES IN ELECTRICAL POWER MANHOLES ARE NO LONGER RELIABLE. CONTRACTOR SHALL USE ALTERNATIVE METHODS FOR REMOVING AND INSTALLING CABLE WHERE REQUIRED, PER SPECIFICATIONS.
13. WHEN EQUIPMENT IDENTIFICATIONS CHANGE, CONTRACTOR SHALL RETAG CABLE IN ALL MANHOLES IN THE CABLE ROUTE AND AT ALL EQUIPMENT. SEE CIRCUIT IDENTIFICATION TAG DETAIL A/V2.
14. ALL MEASUREMENTS SHOWN ON DRAWINGS ARE APPROXIMATE. CONTRACTOR SHALL VERIFY ALL MEASUREMENTS PRIOR TO ORDERING MATERIALS.
15. ALL WATERS DISCHARGED TO GRADE SHALL BE DIRECTED TO AN UPLAND AREA TO ALLOW THE WATER TO PERCOLATE BACK INTO THE GROUND. OTHER REQUIREMENTS FOR INDIVIDUAL LOCATIONS WILL BE NOTED ON PLAN DRAWINGS.
16. THE LATEST MANHOLE SURVEY INFORMATION INDICATE THE POSSIBLE PRESENCE OF ASBESTOS IN SOME MANHOLES AFFECTED BY THIS PROJECT. IF ANY ASBESTOS IS FOUND NOTIFY THE CONTRACTING OFFICER IMMEDIATELY. WOVEN OR FIBROUS MEDIUM VOLTAGE CABLE INSULATION MAY CONTAIN ASBESTOS. IF PRESENT OR DISCOVERED, DO NOT CUT OR DISTURB THIS MATERIAL. CONTACT THE CONTRACTING OFFICER AND REQUEST TESTING FOR ASBESTOS CONTENT. IF ASBESTOS IS FOUND TO BE PRESENT APPROPRIATE WORK PRACTICES, ENGINEERING CONTROLS, PPE AND WASTE DISPOSAL WILL BE REQUIRED TO ENSURE ADEQUATE PROTECTION OF PERSONNEL PERFORMING WORK. ALL WORK INVOLVING HANDLING, DISTURBANCE OR REMOVAL OF IDENTIFIED OR SUSPECTED ASBESTOS CONTAINING MATERIALS MUST HAVE WORK PLAN SIGNED BY A FLORIDA LICENSED ASBESTOS CONSULTANT AND IMPLEMENTED BY A FLORIDA ASBESTOS CONTRACTOR IN ACCORDANCE WITH THE REQUIREMENTS OF SPECIFICATION SECTION 02 82 13.00 98.
17. IF LEAD MATERIALS ARE TO BE DISTURBED, THE CONTRACTOR MUST SUPPLY A SITE SPECIFIC HEALTH AND SAFETY PLAN DESCRIBING ACTIONS THAT WILL BE TAKEN TO ASSURE PROTECTION OF WORKERS, ADJACENT, UNPROTECTED PERSONNEL, AND COMPLIANCE WITH 29 CFR 1926.62. WHERE LEAD CABLES ARE CUT AND/OR REMOVED, PROPER REMOVAL PROCEDURES SHALL BE OBSERVED TO MINIMIZE EXPOSURE TO LEAD DUST. WHERE LEAD CABLE IS CUT, CABLE SHALL BE PROPERLY SEALED.
18. WHERE ORANGEBURG MATERIAL OR DEBRIS IS ENCOUNTERED IN MANHOLES OR IS THE PRODUCT OF EXISTING ORANGEBURG DUCT CLEANING, THE CONTRACTOR SHALL PROVIDE APPROPRIATE PERSONNEL PROTECTION EQUIPMENT (PPE) AND PROPER FIELD SANITATION FACILITIES AS REQUIRED BY C.H.S. (CHS). PREVENT ACCUMULATION OF SOLID DEBRIS AT THE WORK SITE. EFFLUENT FROM DEWATERING ACTIVITIES REQUIRED TO CLEAN THE DEBRIS MUST BE CONTAINERIZED USING A FILTER MECHANISM TO CAPTURE ANY SOLID DEBRIS ASSOCIATED WITH CLEAN OUT. BEFORE DISCHARGING ANY EFFLUENT FROM DEWATERING MANHOLES, THE PROJECT MANAGER OR CONTRACTING OFFICER SHALL VISUALLY INSPECT THE MANHOLE TO VERIFY THERE IS NO SOLID ORANGEBURG DEBRIS IN THE MANHOLE. ANY SOLID MATERIAL THAT IS ACCUMULATED FROM THIS ACTIVITY SHALL BE CONTAINERIZED AND DISPOSED OF PER KHB8800.7. CONTAINERS WILL BE PROVIDED AND REMOVED FROM THE JOB SITE BY ISC.

SINGLE LINE DIAGRAM LEGEND

- NOTE REFERENCE
- EXISTING 15KV CIRCUIT BREAKER
- EXISTING TRANSFORMER
- PROVIDE TRANSFORMER
- ELBOW TERMINATION
- EXISTING SWITCHGEAR BREAKER OR VACUUM FAULT INTERRUPTER
- NO — EXISTING DISCONNECT SWITCH (NORMALLY OPEN)
- EXISTING DISCONNECT SWITCH (NORMALLY CLOSED)
- EXISTING CONDUCTORS
- PROVIDE CONDUCTORS
- R — REMOVE CONDUCTORS
- CABLE SPLICE FROM EXISTING TO NEW CONDUCTOR
- EXISTING FUSED SWITCH
- EXISTING FUSE
- EXISTING CABLE SPLICE IN JUNCTION BOX OR MANHOLE
- REMOVE CABLE SPLICE
- REMOVE TRIFURCATING SPLICE
- CUT CABLE IN MANHOLE
- LIVE END SPLICE
- SWITCH WAYS — 1 2 3 4 — EXISTING LOAD BREAK SWITCH WITH STUD BUSHINGS
- S1 S2 V1 V2 — EXISTING PAD MOUNT VFI WITH ELBOW TERMINATIONS
  2 – SWITCHED WAYS
  2 – VACUUM INTERRUPTERS (NO. VARIES)
- S1 S2 V1 V2 — PROVIDE PAD MOUNT VFI WITH ELBOW TERMINATIONS
  2 – SWITCHED WAYS
  2 – VACUUM INTERRUPTERS (NO. VARIES)

*–ALPHA NOTATION = EXISTING CABLE SCHEDULE

- 3(A) — EXISTING CABLE (A) IS BEING REPLACED WITH NEW CABLE 3 OR HAVING ITS DESIGNATIONS CHANGED TO THAT OF CABLE 3
- CABLE DESIGNATION SEE CONDUIT AND CABLE SCHEDULE — *–NUMERIC NOTATION = NEW CABLE SCHEDULE
- EXISTING MANHOLE/HANDHOLE
- EXISTING EQUIPMENT
- REMOVE EQUIPMENT
- PROVIDE EQUIPMENT
- HH — PROVIDE HANDHOLE

PLAN LEGEND

- UE — EXISTING CONDUIT AND CABLE BELOW GRADE TO REMAIN
- UE — EXISTING DUCT BELOW GRADE TO REMAIN, REMOVE CONDUCTORS AS INDICATED
- UEN — PROVIDE UNDERGROUND DUCT
- EXISTING CABLE (MANHOLE DETAIL)
- R — REMOVE CABLE
- PROVIDE CABLE (MANHOLE DETAIL)
- UE — PROVIDE CABLES IN EXISTING UNDERGROUND DUCT (REMOVE CABLES AS INDICATED)
- A — ABANDONED IN PLACE
- OE — EXISTING AERIAL CABLE
- RA — REMOVE CONDUCTORS, ABANDON CONDUIT
- A — EXISTING CABLE NUMBER
- DB — EXISTING DIRECT BURIED CABLE
- 1 — NEW CABLE NUMBER
- DB — PROVIDE DIRECT BURIED CABLE
- NOTE REFERENCE
- * — CABLE DESIGNATION, SEE CONDUIT AND CABLE SCHEDULE
  *–ALPHA NOTATION = EXISTING CABLE SCHEDULE
  *–NUMERIC NOTATION = NEW CABLE SCHEDULE
- 3(A) — EXISTING CABLE (A) IS BEING REPLACED WITH NEW CABLE 3 OR HAVING ITS DESIGNATIONS CHANGED TO THAT OF CABLE 3
- PROVIDE SPLICE
- EXISTING SPLICE
- REMOVE SPLICE
- EXISTING TRIFURCATING SPLICE
- REMOVE TRIFURCATING SPLICE
- MH 18A — EXISTING ELECTRICAL MANHOLE
- HH — EXISTING HANDHOLE
- HH — PROVIDE HANDHOLE
- EXISTING 15kV SWITCH
- FRONT — EXISTING TRANSFORMER
- RR — EXISTING RAILROAD TRACKS
- UK — EXISTING UTILITY – TYPE UNKNOWN
- X — EXISTING FENCE
- W — EXISTING WATER LINE
- WW — EXISTING WASTE WATER LINE
- SF — DOUBLE SILT FENCE, SEE DETAIL BR/E26
- EXISTING EQUIPMENT
- REMOVE EQUIPMENT
- PROVIDE EQUIPMENT
- DIRECTIONAL DRILLED DUCT SECTION
- GROUND ROD (MANHOLE DETAILS)

ABBREVIATIONS

ABND	ABANDON		
ACM	ASBESTOS CONTAINING MATERIAL	LOC	LAUNCH OPERATIONS CONTRACTOR
AUX	AUXILIARY	MCB	MAIN CIRCUIT BREAKER
AWG	AMERICAN WIRE GAUGE	MH	ELECTRICAL MANHOLE
BKR	BREAKER	N	NEUTRAL
BLDG	BUILDING	NF	NON–FUSED
BSD	BARE SOFT DRAWN	OCB	OIL CIRCUIT BREAKER
C, CND	CONDUIT	N.O.	NORMALLY OPEN
CKT	CIRCUIT	PILC (NJ)	PAPER INSULATED, LEAD COVERED (NEOPRENE JACKET)
CKT BKR	CIRCUIT BREAKER		
COMM	COMMUNICATIONS	POS	POSITION
CT	CURRENT TRANSFORMER	PT	POTENTIAL TRANSFORMER
CU	COPPER	PVC	POLYVINYL CHLORIDE
DB	DIRECT BURIED	PWR	POWER
DISC	DISCONNECT	SCH	SCHEDULE
DISTR	DISTRIBUTION	SECT. CAB.	SECTIONALIZING CABINET
DWG	DRAWING	SP	SPARE
ELEC	ELECTRICAL	SS	SUBSTATION
EPR	ETHYLENE–PROPYLENE RUBBER	STA	STATION
EXIST.	EXISTING	SUBSTA	SUBSTATION
FDR	FEEDER	SUPV	SUPERVISORY
GEN	GENERATOR	SW	SWITCH
G, GND	GROUND	SWGR	SWITCHGEAR
GALV	GALVANIZED	SWMU	SOLID WASTE MANAGEMENT UNIT
GRS	GALVANIZED RIGID STEEL	TYP	TYPICAL
HDPE	HIGH DENSITY POLYETHYLENE	UG	UNDERGROUND
ISC	INSTITUTION SERVICES CONTRACTOR	USS	UNIT SUBSTATION
KCMIL,MCM	THOUSAND CIRCULAR MILS	V	VOLT
KV	KILOVOLTS	VFI	VACUUM FAULT INTERRUPTER
KVA	KILOVOLT AMPERES	VLF	VERY LOW FREQUENCY
LBS	LOAD BREAK SWITCH	XFMR	TRANSFORMER
		XLP	CROSS–LINKED POLYETHYLENE INSULATED

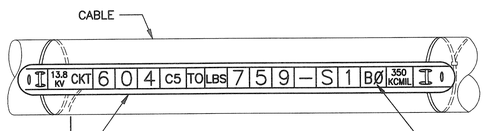

38mm HIGH POLYPROPYLENE TAGS WITH BLACK ON YELLOW FINISH STANDARD CHARACTERS (TYPICAL CABLE NUMBER SHOWN)

INDICATES PHASE OF SINGLE CONDUCTOR CABLE

FOR MANHOLES & CABLE VAULTS

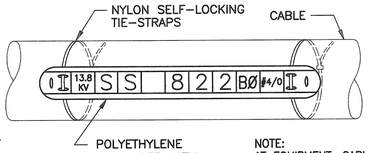

POLYETHYLENE TAGHOLDER WITH BLACK FINISH (TYPICAL)

NOTE:
AT EQUIPMENT, CABLE TAG SHALL IDENTIFY EQUIPMENT AT OTHER END OF THE CABLE.

AT EQUIPMENT

CIRCUIT IDENTIFICATION TAG DETAIL

FOR NEW AND EXISTING CABLE

A
V2
E2
E4 E12 E18
E9 E13 E19
E10 E14
E11 E15

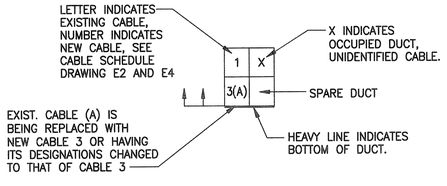

DISTRIBUTION DUCTBANK SECTION LOOKING IN DIRECTION OF ARROWS

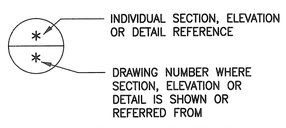

DETAIL REFERENCE

SYM.	ZONE	DESCRIPTION	DATE	APPROVED

REVISIONS

ENGINEER OF RECORD: W. WILSON — PE License No. 22283

Fred Wilson & Associates, Inc. Consulting Engineers
C.A. NO. 7188 • 904-398-8636
3970 Hendricks Avenue • Jacksonville, FL 32207

SIGNATURES		DATE
DESIGNED	V. KELEMEN	4/09
DRAWN	V. KELEMEN	4/09
CHECKED	H. OBERN	6/09
SUBMITTED		9/25/09
APPROVED		9/25/09
APPROVED		
APPROVED		
APPROVED		
APPROVED		
APPROVED		

NATIONAL AERONAUTICS AND SPACE ADMINISTRATION
JOHN F. KENNEDY SPACE CENTER, NASA
KENNEDY SPACE CENTER, FLORIDA

REPLACE FEEDERS AND DUCTS
VAB AREA NORTH

GENERAL NOTES AND LEGEND

FILE NO. | SIZE F | DWG. NO. 79K38608 | –

PROJ. NO. 98778 | SHEET 2

A/E FILE No. 0601\0601–25\0601–25.1
FILE: LEGEND.DWG
THIS DRAWING PREPARED BY AutoCAD 2008

V2

NOTICE — WHEN GOVERNMENT DRAWINGS, SPECIFICATIONS, OR OTHER DATA ARE USED FOR ANY PURPOSE OTHER THAN IN CONNECTION WITH A DEFINITELY RELATED GOVERNMENT PROCUREMENT OPERATION, THE UNITED STATES GOVERNMENT THEREBY INCURS NO RESPONSIBILITY NOR ANY OBLIGATION WHATSOEVER; AND THE FACT THAT THE GOVERNMENT MAY HAVE FORMULATED, FURNISHED, OR IN ANY WAY SUPPLIED THE SAID DRAWINGS, SPECIFICATIONS, OR OTHER DATA IS NOT TO BE REGARDED BY IMPLICATION OR OTHERWISE IN ANY MANNER CONSTRUED, AS LICENSING THE HOLDER, OR ANY OTHER PERSON OR CORPORATION; OR CONVEYING ANY RIGHTS OR PERMISSION TO MANUFACTURE, USE, OR SELL ANY PATENTED INVENTION THAT MAY IN ANY WAY BE RELATED THERETO.

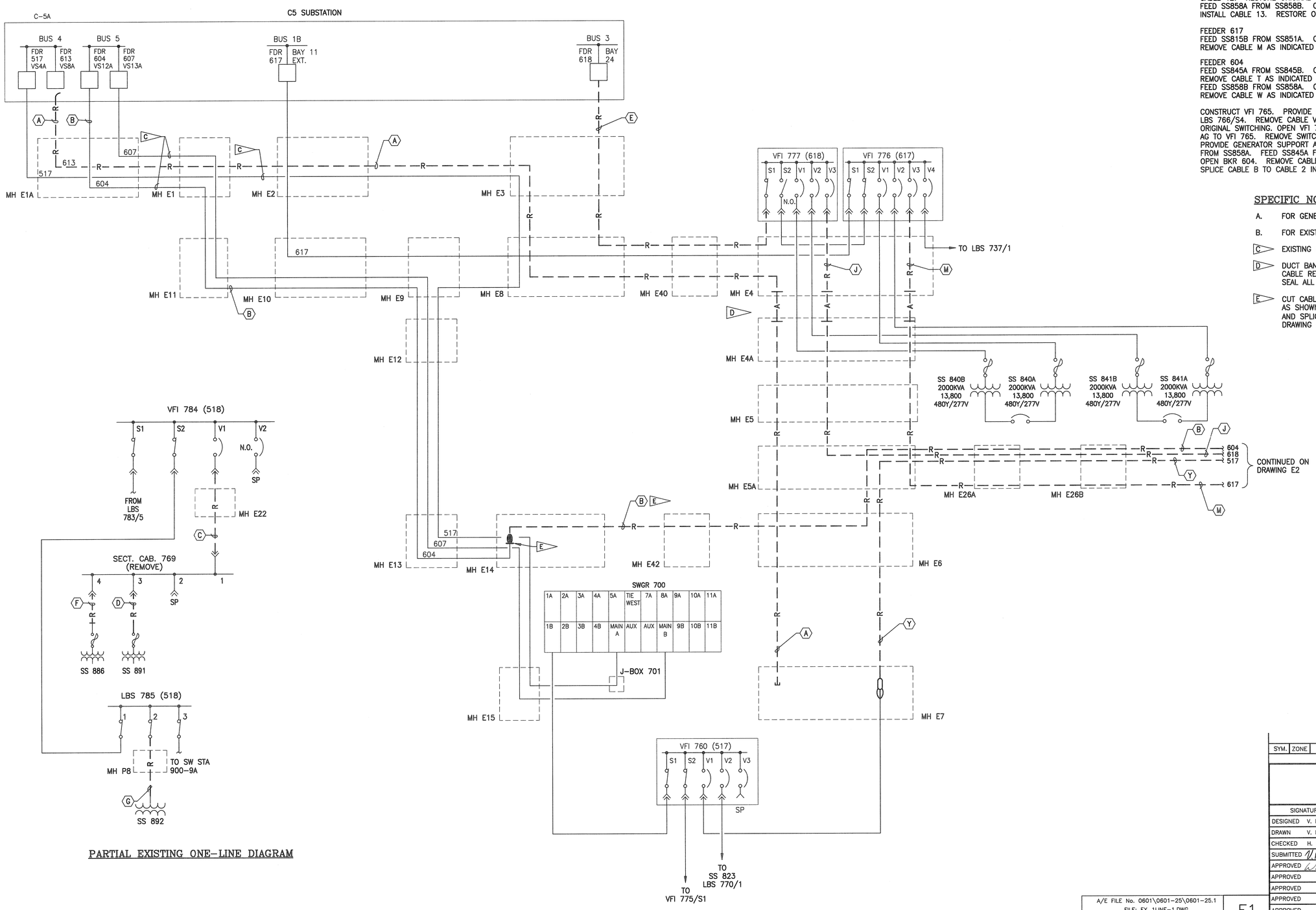

PARTIAL EXISTING ONE-LINE DIAGRAM

SUGGESTED SEQUENCE OF CONSTRUCTION:

TYPICALLY RUN NEW CABLE BEFORE REMOVING OLD CABLE WHERE POSSIBLE.

FEEDER 618
FEED SS845B FROM SS845A. OPEN TRANSFORMER PRIMARY SWITCHES. OPEN BKR 618. REMOVE CABLES E, J AND P AS INDICATED. INSTALL CABLES 3, 6 AND 17. RESTORE ORIGINAL SWITCHING.
FEED SS815A FROM SS815B. OPEN TRANSFORMER PRIMARY SWITCH. OPEN LBS 749/S3. REMOVE CABLE N AS INDICATED AND INSTALL CABLE 18. RESTORE ORIGINAL SWITCHING.

FEEDER 517
CLOSE LBS 763/S5 AND OPEN LBS 763/S1. OPEN VFI 760/V1. REMOVE CABLE Y AS INDICATED AND INSTALL CABLE 10. RESTORE ORIGINAL SWITCHING.
PROVIDE GENERATOR SUPPORT FOR SS822 AND SS1112, OPEN LBS 763/S2. REMOVE CABLES Z AND AA AND INSTALL CABLES 11 AND 14. RESTORE ORIGINAL SWITCHING.
PROVIDE GENERATOR SUPPORT FOR SS849, OPEN LBS 763/S3. REMOVE CABLE AB AND INSTALL CABLE 12. RESTORE ORIGINAL SWITCHING.
FEED SS858A FROM SS858B. OPEN TRANSFORMER PRIMARY SWITCH. REMOVE CABLE AC AND INSTALL CABLE 13. RESTORE ORIGINAL SWITCHING.

FEEDER 617
FEED SS815B FROM SS851A. OPEN TRANSFORMER PRIMARY SWITCH. OPEN VFI 776/V3. REMOVE CABLE M AS INDICATED AND INSTALL CABLE 9. RESTORE ORIGINAL SWITCHING.

FEEDER 604
FEED SS845A FROM SS845B. OPEN TRANSFORMER PRIMARY SWITCH. OPEN LBS 759/S2. REMOVE CABLE T AS INDICATED AND INSTALL CABLE 15. RESTORE ORIGINAL SWITCHING.
FEED SS858B FROM SS858A. OPEN TRANSFORMER PRIMARY SWITCH. OPEN LBS 766/S1. REMOVE CABLE W AS INDICATED AND INSTALL CABLE 19. RESTORE ORIGINAL SWITCHING.

CONSTRUCT VFI 765. PROVIDE GENERATOR SUPPORT AT SS848 AND SS846. OPEN LBS 766/S4. REMOVE CABLE V, AD AND AE. INSTALL CABLE 20, 21 AND 22. RESTORE ORIGINAL SWITCHING. OPEN VFI 765/V3 & V4. PULL BACK AND CONNECT CABLES AF AND AG TO VFI 765. REMOVE SWITCH STATION 708.
PROVIDE GENERATOR SUPPORT AT LBS 766 FOR SS846, SS847 & SS848. FEED SS858B FROM SS858A. FEED SS845A FROM SS845B. OPEN TRANSFORMER PRIMARY SWITCHES. OPEN BKR 604. REMOVE CABLES B, R AND U AS INDICATED. INSTALL CABLES 2 AND 16. SPLICE CABLE B TO CABLE 2 IN MH E14. REMOVE LBS 765.

SPECIFIC NOTES

A. FOR GENERAL NOTES AND LEGEND, SEE DRAWING V2.

B. FOR EXISTING CABLE SCHEDULE, SEE DRAWING E2.

C. EXISTING EPR CABLE TO REMAIN.

D. DUCT BANK HAS COLLASPED BETWEEN MH E4 AND MH E4A MAKING CABLE REMOVAL IMPOSSIBLE BETWEEN THESE TWO MANHOLES. CAP AND SEAL ALL CABLE ENDS THAT ARE ABANDONED IN MH E4 AND MH E4A.

E. CUT CABLE (B) IN MH E14 ON THE EPR SIDE OF THE EPR/XLP SPLICE AS SHOWN. REPLACE THE XLP PORTION OF CABLE (B) WITH CABLE (2) AND SPLICE CABLE (2) TO CABLE (B) IN MH E14. SEE MODIFIED ONE LINE, DRAWING E3.

SYM.	ZONE	DESCRIPTION	DATE	APPROVED
		REVISIONS		

ENGINEER OF RECORD: W. WILSON — PE License No. 22283

Fred Wilson & Associates, Inc. Consulting Engineers
C.A. NO. 7188 • 904-390-8636
3970 Hendricks Avenue • Jacksonville, FL 32207

SIGNATURES		DATE
DESIGNED	V. KELEMEN	4/09
DRAWN	V. KELEMEN	4/09
CHECKED	H. OBERN	6/09
SUBMITTED	W. Wilson	9/25/09
APPROVED	W. Wilson	9/25/09
APPROVED		
APPROVED		
APPROVED		
APPROVED		
APPROVED		

NATIONAL AERONAUTICS AND SPACE ADMINISTRATION
JOHN F. KENNEDY SPACE CENTER, NASA
KENNEDY SPACE CENTER, FLORIDA

REPLACE FEEDERS AND DUCTS
VAB AREA NORTH

EXISTING ONE LINE DIAGRAM
SHEET 1

FILE NO. | SIZE F | DWG. NO. 79K38608 | –
PROJ. NO. 98778 | SHEET 3

A/E FILE No. 0601\0601-25\0601-25.1
FILE: EX_1LINE-1.DWG
THIS DRAWING PREPARED BY AutoCAD 2008

E1

NOTICE – WHEN GOVERNMENT DRAWINGS, SPECIFICATIONS, OR OTHER DATA ARE USED FOR ANY PURPOSE OTHER THAN IN CONNECTION WITH A DEFINITELY-RELATED GOVERNMENT PROCUREMENT OPERATION, THE UNITED STATES GOVERNMENT LOSES NO RESPONSIBILITY NOR ANY OBLIGATION WHATSOEVER, AND THE FACT THAT THE GOVERNMENT MAY HAVE FORMULATED, FURNISHED, OR IN ANY WAY SUPPLIED THE SAID DRAWINGS, SPECIFICATIONS OR OTHER DATA IS NOT TO BE REGARDED BY IMPLICATION, OR OTHERWISE AS IN ANY MANNER LICENSING THE HOLDER OR ANY OTHER PERSON OR CORPORATION, OR CONVEYING ANY RIGHTS OR PERMISSION TO MANUFACTURE, USE OR SELL ANY PATENTED INVENTION THAT MAY IN ANY WAY BE RELATED THERETO.

EXISTING CABLE SCHEDULE

SEE DETAIL A / V2

	CABLE NO.	FDR		FROM	TO	REMARKS
G	A	613	1–3/C 500MCM – PILC	BREAKER 613	MH E7	DISCONNECTED AT C5 SUBSTATION. REMOVE
L	B	604	3–1/C 350KCMIL EPR, #1/0 XLP	BREAKER 604	LBS 759/S1	REMOVE CABLE FROM MH E14 TO LBS 759
	C	518	3–1/C #4/0 – XLP	VFI 784/V1	SECT. CAB. 769/1	REMOVE CABLE
	D	518	3–1/C #4/0 – EPR	SECT. CAB. 769/3	SS 891	REMOVE CABLE
B	E	618	3–1/C 350KCMIL – XLP	BREAKER 618	VFI 777/S1	REMOVE CABLE
	F	518	3–1/C #4/0 – EPR	SECT. CAB. 769/4	SS 886	N
	G	518	3–1/C #4/0 – XLP	LBS 785/2	SS 892	REMOVE CABLE
	H	–	–	–	–	–
D M	J	618	3–1/C #2/0 – XLP/EPR	VFI 777/V3	LBS 749/S5	REMOVE CABLE FROM VFI 777/V3 TO MH E27
	K	–	–	–	–	–
	L	–	–	–	–	–
E	M	617	3–1/C #2/0 – XLP	VFI 776/V3	SS 815B	REMOVE CABLE
M	N	618	3–1/C #2/0 – XLP/EPR	LBS 749/S3	SS 815A	REMOVE CABLE FROM MH E27 TO SS 815A
	P	618	3–1/C #2/0 – XLP/EPR	LBS 749/S4	SS 845B	REMOVE CABLE FROM MH E27 TO SS 845B
	R	–	–	–	–	–
	S	–	–	–	–	–
L	T	604	3–1/C #2/0 – XLP	LBS 759/S2	SS 845A	REMOVE CABLE
	U	604	3–1/C #1/0 – XLP	LBS 759/S5	LBS 766/S5	REMOVE CABLE
	V	604	3–1/C #1/0 – XLP	LBS 766/S4	SW STA 708/1	REMOVE CABLE
	W	604	3–1/C #1/0 – XLP	LBS 766/S1	SS 858B	REMOVE CABLE
F	Y	517	1–3/C #4/0 – PILC	VFI 760/V1	LBS 763/S1	REMOVE CABLE FROM MH E7 TO LBS 763
	Z	517	3–1/C #2/0 – XLP	LBS 763/S2	SS 822	REMOVE CABLE
	AA	517	3–1/C #2/0 – XLP	SS 822	SS 1112	REMOVE CABLE
	AB	517	3–1/C #2/0 – XLP	LBS 763/S3	SS 849	REMOVE CABLE
	AC	517	3–1/C #2/0 – XLP	LBS 763/S4	SS 858A	REMOVE CABLE
	AD	–	–	–	–	–
	AE	–	–	–	–	–
	AF	604	J	SW STA 708/4	ML INTERFACE	REMOVE CABLE
	AG	604	J	SW STA 708/5	ML INTERFACE	REMOVE CABLE

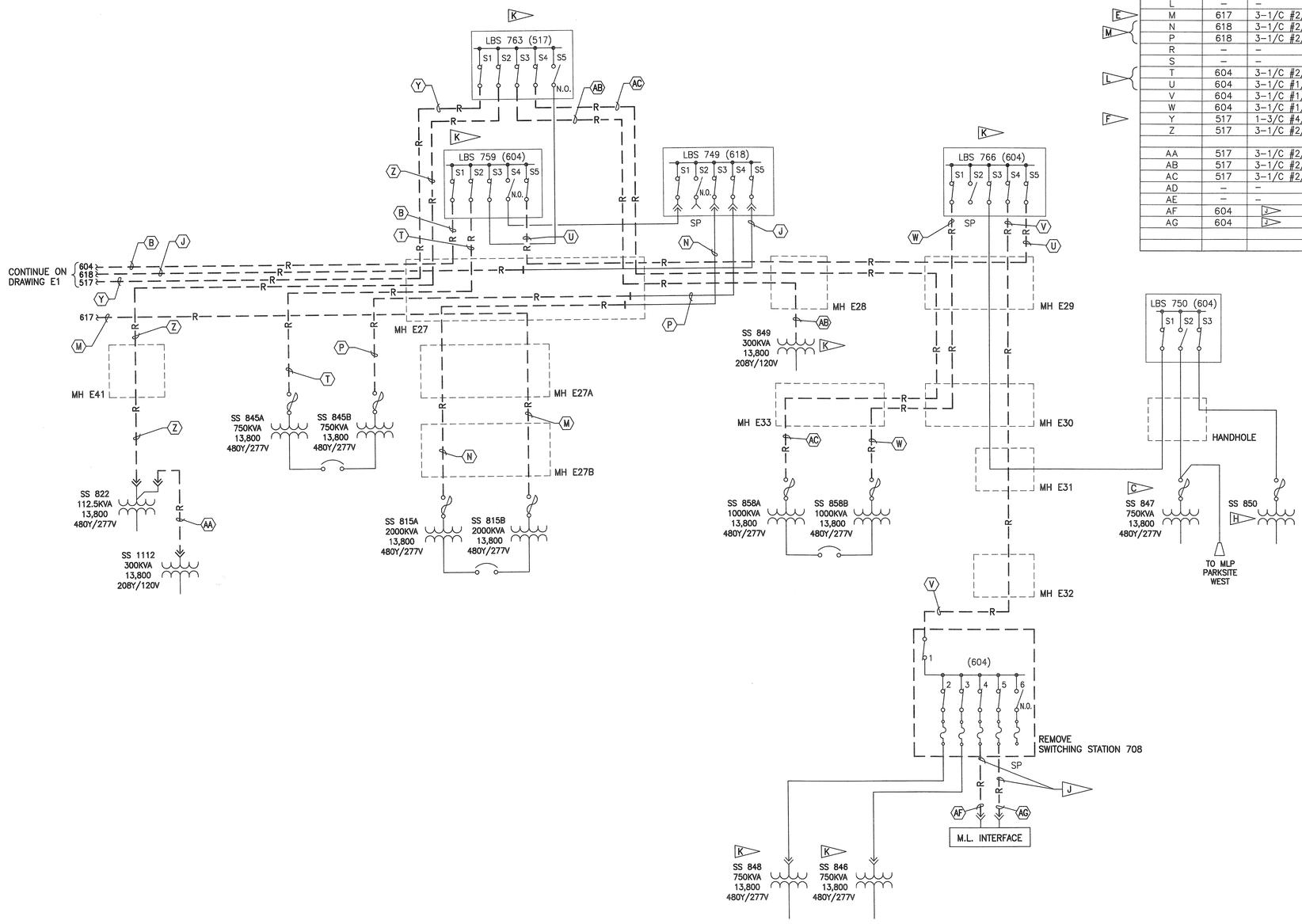

SPECIFIC NOTES

A. FOR GENERAL NOTES AND LEGEND, SEE DRAWING V2.

B. CABLE (E) IS 3–1/C 350KCMIL EPR FROM VFI 777–S1 TO MANHOLE E4.

C. SS 847 TO BE REPLACED BY OTHERS ON DWG 98K01044, PCN 98262.1.

D. CABLE (J) IS 3–1/C #4/0 EPR FROM VFI 777–V3 TO MANHOLE E4.

E. CABLE (M) IS 3–1/C #4/0 EPR FROM VFI 776–V3 TO MANHOLE E4.

F. CABLE (Y) IS 3–1/C #4/0 EPR FROM VFI 760–V1 TO MANHOLE E7.

G. CABLE (A) IS 3–1/C 500KCMIL EPR FROM C5 SUBSTATION TO MANHOLE E2.

H. SS 850 IS INSTALLED AT THE CONSTRUCTION TRAILERS FOR THE MLP PARKSITE WEST CONSTRUCTION.

J. CABLE IS MINING TYPE CABLE – AMERICAN MUSTANG #2/0, 3/C TYPE SHD–GC, 15KV. AIW CORP. P–136–48 MSHA EMR–1084.

K. EXISTING STUD BUSHINGS.

L. CABLES (B), (T) & (U) ARE 3–1/C #4/0 EPR FROM LBS 759 TO MANHOLE E27.

M. CABLES (J), (N) & (P) ARE 3–1/C #4/0 EPR FROM LBS 749 TO MANHOLE E27.

N. PROVIDE IN–GROUND SPLICE TO CONNECT CABLES "5" AND "F". CONNECT CONDUIT THAT CONTAINED CABLE "C" TO CONDUIT THAT CONTAINED CABLE "D" AT SECTIONALIZING CABINET 769 LOCATION. ROUTE CABLE "4" THROUGH THAT CONDUIT.

SYM.	ZONE	DESCRIPTION	DATE	APPROVED
		REVISIONS		

ENGINEER OF RECORD: W. WILSON — PE License No. 22283

Fred Wilson & Associates, Inc.
Consulting Engineers
C.A. NO. 7188 • 904-398-8434
3970 Hendricks Avenue • Jacksonville, FL 32207

SIGNATURES		DATE
DESIGNED	V. KELEMEN	4/09
DRAWN	V. KELEMEN	4/09
CHECKED	H. OBERN	6/09
SUBMITTED		9/25/09
APPROVED		9/25/09
APPROVED		
APPROVED		
APPROVED		
APPROVED		
APPROVED		

NATIONAL AERONAUTICS AND SPACE ADMINISTRATION
JOHN F. KENNEDY SPACE CENTER, NASA
KENNEDY SPACE CENTER, FLORIDA

REPLACE FEEDERS AND DUCTS VAB AREA NORTH

EXISTING ONE LINE DIAGRAM SHEET 2 AND EXISTING CABLE SCHEDULE

FILE NO. | SIZE F | DWG. NO. 79K38608

PROJ. NO. 98778 | SHEET 4

A/E FILE No. 0601\0601–25\0601–25.1
FILE: EX_1LINE–2.DWG
THIS DRAWING PREPARED BY AutoCAD 2008

E2

NOTICE – WHEN GOVERNMENT DRAWINGS, SPECIFICATIONS, OR OTHER DATA ARE USED FOR ANY PURPOSE OTHER THAN IN CONNECTION WITH A DEFINITELY RELATED GOVERNMENT PROCUREMENT OPERATION, THE UNITED STATES GOVERNMENT THEREBY INCURS NO RESPONSIBILITY, NOR ANY OBLIGATION WHATSOEVER; AND THE FACT THAT THE GOVERNMENT MAY HAVE FORMULATED, FURNISHED, OR IN ANY WAY SUPPLIED THE SAID DRAWINGS, SPECIFICATIONS OR OTHER DATA IS NOT TO BE REGARDED BY IMPLICATION OR OTHERWISE AS IN ANY MANNER LICENSING THE HOLDER OR ANY OTHER PERSON OR CORPORATION, OR CONVEYING ANY RIGHTS OR PERMISSION TO MANUFACTURE, USE, OR SELL ANY PATENTED INVENTION THAT MAY IN ANY WAY BE RELATED THERETO.

SPECIFIC NOTES

A. FOR GENERAL NOTES AND LEGEND, SEE DRAWING V2.

B. FOR NEW CABLE SCHEDULE, SEE DRAWING E4.

C. MANHOLE SPLICES OF NEW CABLE TO NEW CABLE ARE NOT SHOWN ON THIS DRAWING. REFER TO MANHOLE DETAIL DRAWINGS FOR NEW CABLE TO NEW CABLE SPLICES.

D. SPLICE CABLE 'B' TO CABLE '2' IN MANHOLE E14. RETAG AS CABLE 2.

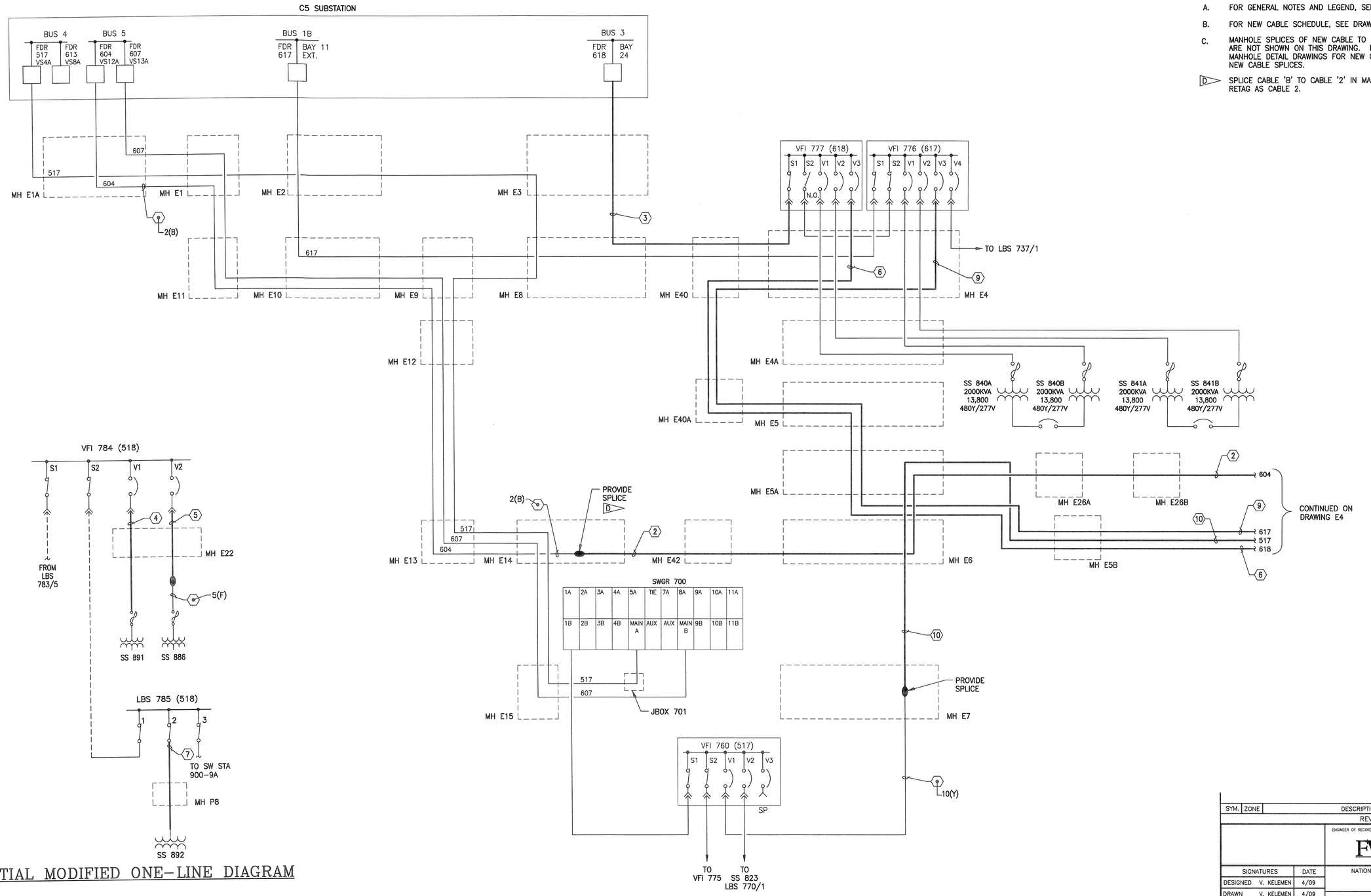

PARTIAL MODIFIED ONE-LINE DIAGRAM

MODIFIED ONE-LINE DIAGRAM

SYM.	ZONE	DESCRIPTION	DATE	APPROVED

REVISIONS

ENGINEER OF RECORD: W. WILSON — PE License No. 22283

Fred Wilson & Associates, Inc. Consulting Engineers
C.A. NO. 7188 • 904-398-8636
3970 Hendricks Avenue • Jacksonville, FL 32207

SIGNATURES		DATE
DESIGNED	V. KELEMEN	4/09
DRAWN	V. KELEMEN	4/09
CHECKED	H. OBERN	6/09
SUBMITTED	W. Wilson	9/25/09
APPROVED	[illegible]	9/25/09
APPROVED		
APPROVED		
APPROVED		
APPROVED		
APPROVED		

NATIONAL AERONAUTICS AND SPACE ADMINISTRATION
JOHN F. KENNEDY SPACE CENTER, NASA
KENNEDY SPACE CENTER, FLORIDA

REPLACE FEEDERS AND DUCTS
VAB AREA NORTH

MODIFIED ONE LINE DIAGRAM
SHEET 1

FILE NO. | SIZE F | DWG. NO. 79K38608 | –
PROJ. NO. 98778 | SHEET 5

A/E FILE No. 0601\0601-25\0601-25.1
FILE: MOD_1LINE-1.DWG
THIS DRAWING PREPARED BY AutoCAD 2008

E3

NOTICE – WHEN GOVERNMENT DRAWINGS, SPECIFICATIONS, OR OTHER DATA ARE USED FOR ANY PURPOSE OTHER THAN IN CONNECTION WITH A DEFINITELY GOVERNMENT-RELATED GOVERNMENT PROCUREMENT OPERATION, THE UNITED STATES GOVERNMENT THEREBY INCURS NO RESPONSIBILITY NOR ANY OBLIGATION WHATSOEVER; AND THE FACT THAT THE GOVERNMENT MAY HAVE FORMULATED, FURNISHED, OR IN ANY WAY SUPPLIED THE SAID DRAWINGS, SPECIFICATIONS OR OTHER DATA IS NOT TO BE REGARDED BY IMPLICATION OR OTHERWISE AS IN ANY MANNER LICENSING THE HOLDER OR ANY OTHER PERSON OR CORPORATION, OR CONVEYING ANY RIGHTS OR PERMISSION TO MANUFACTURE, USE, OR SELL ANY PATENTED INVENTION THAT MAY IN ANY WAY BE RELATED THERETO.

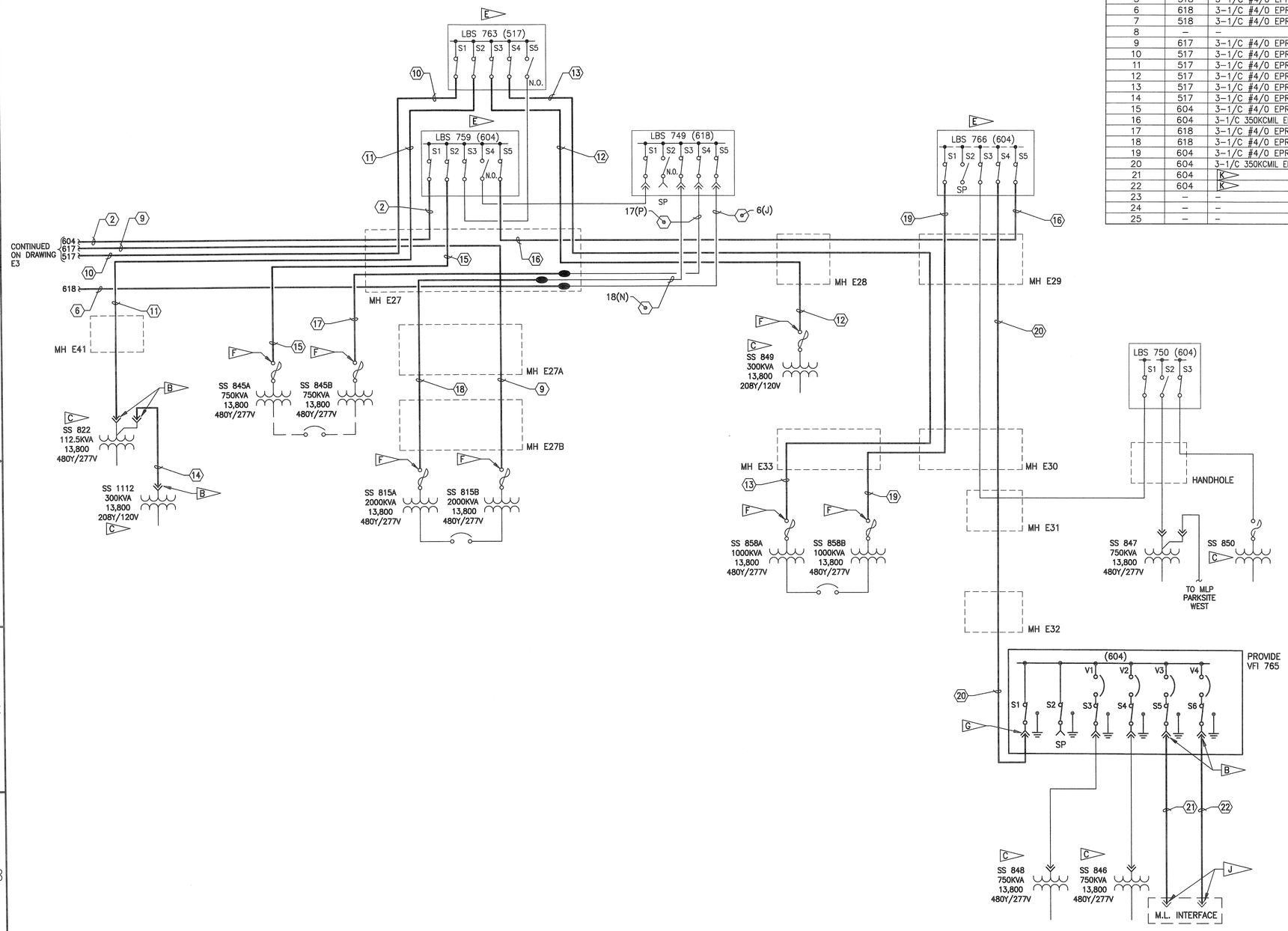

NEW CABLE SCHEDULE

SEE DETAIL A/V2

CABLE NO.	FDR		FROM	TO	REMARKS
1					
2	604	3-1/C 350KCMIL, EPR, 1/3 NEUTRAL	BKR 604	LBS 759/S1	SPLICE TO CABLE 'B' IN MH E14
3	618	3-1/C 350KCMIL, EPR, 1/3 NEUTRAL	BKR 618	VFI 777/S1	PROVIDE CABLE
4	518	3-1/C #4/0 EPR, FULL NEUTRAL	VFI 784/V1	SS 896	PROVIDE CABLE
5	518	3-1/C #4/0 EPR, FULL NEUTRAL	VFI 784/V2	SS 886	H
6	618	3-1/C #4/0 EPR, FULL NEUTRAL	VFI 777/V3	LBS 749/S5	SPLICE TO CABLE 'J' IN MH E27
7	518	3-1/C #4/0 EPR, FULL NEUTRAL	LBS 785/2	SS 892	PROVIDE CABLE
8	–	–	–	–	–
9	617	3-1/C #4/0 EPR, FULL NEUTRAL	VFI 776/V3	SS 815B	PROVIDE CABLE
10	517	3-1/C #4/0 EPR, FULL NEUTRAL	VFI 760/V1	LBS 763/S1	SPLICE TO CABLE 'Y' IN MH E7
11	517	3-1/C #4/0 EPR, FULL NEUTRAL	LBS 763/S2	SS 822	PROVIDE CABLE
12	517	3-1/C #4/0 EPR, FULL NEUTRAL	LBS 763/S3	SS 849	PROVIDE CABLE
13	517	3-1/C #4/0 EPR, FULL NEUTRAL	LBS 763/S4	SS 858A	PROVIDE CABLE
14	517	3-1/C #4/0 EPR, FULL NEUTRAL	SS 822	SS 1112	PROVIDE CABLE
15	604	3-1/C #4/0 EPR, FULL NEUTRAL	LBS 759/S2	SS 845A	PROVIDE CABLE
16	604	3-1/C 350KCMIL EPR, 1/3 NEUTRAL	LBS 759/S5	LBS 766/S5	PROVIDE CABLE
17	618	3-1/C #4/0 EPR, FULL NEUTRAL	LBS 749/S4	SS 845B	SPLICE TO CABLE 'P' IN MH E27
18	618	3-1/C #4/0 EPR, FULL NEUTRAL	LBS 749/S3	SS 815A	SPLICE TO CABLE 'N' IN MH E27
19	604	3-1/C #4/0 EPR, FULL NEUTRAL	LBS 766/S1	SS 858B	PROVIDE CABLE
20	604	3-1/C 350KCMIL EPR, 1/3 NEUTRAL	LBS 766/S4	VFI 765/S1	EXTEND DUCT TO VFI 765
21	604	K	VFI 765/V3	MLP INTERFACE	PROVIDE CABLE
22	604	K	VRI 765/V4	MLP INTERFACE	PROVIDE CABLE
23	–	–	–	–	–
24	–	–	–	–	–
25	–	–	–	–	–

SPECIFIC NOTES

A. FOR GENERAL NOTES AND LEGEND, SEE DRAWING V2.

B PROVIDE 200A DEAD FRONT ELBOWS. FOR TERMINATIONS AT SWITCH POSITIONS V3 AND V4, SEE DETAIL "BM" ON DRAWING E16.

C GOVERNMENT TO PROVIDE GENERATOR SUPPORT DURING CABLE REPLACEMENT, IF REQUIRED.

D. MANHOLE SPLICES OF NEW CABLE TO NEW CABLE ARE NOT SHOWN ON THIS DRAWING. REFER TO MANHOLE DETAIL DRAWINGS FOR NEW CABLE TO NEW CABLE SPLICES.

E PROVIDE 600A STUD BUSHING TERMINATIONS.

F PROVIDE 15KV BOLTED TERMINATIONS.

G PROVIDE 600A DEAD FRONT ELBOW.

H PROVIDE IN-GROUND SPLICE TO CONNECT CABLES "5" AND "F". PROVIDE ELECTRONIC BALL MARKER ABOVE SPLICE. CONNECT CONDUIT THAT CONTAINED CABLE "C" TO CONDUIT THAT CONTAINED CABLE "D" AT CABINET 769. ROUTE CABLE "4" THROUGH THEM.

J PROVIDE ADELET-PLM SOCKET FEMALE GEARMOUNT COUPLER (STD) (QUIK) (1/4-TURN) THREADS; PART # SFG 415A OR APPROVED EQUAL.

K PROVIDE MINING CABLE; 3/C-#4/0 EPR, 15kV 90 DEGREE C., TYPE SHD-GC POWER, SHIELDED ROUND PORTABLE W/GROUND CHECK.

SYM.	ZONE	DESCRIPTION	DATE	APPROVED
		REVISIONS		

ENGINEER OF RECORD: W. WILSON — PE License No. 22283

Fred Wilson & Associates, Inc.
Consulting Engineers
C.A. NO. 7188 • 904-398-8436
3970 Hendricks Avenue • Jacksonville, FL 32207

SIGNATURES		DATE
DESIGNED	V. KELEMEN	4/09
DRAWN	V. KELEMEN	4/09
CHECKED	H. OBERN	6/09
SUBMITTED	W. Wilson	9/25/09
APPROVED	[illegible]	9/25/09
APPROVED		
APPROVED		
APPROVED		
APPROVED		
APPROVED		

NATIONAL AERONAUTICS AND SPACE ADMINISTRATION
JOHN F. KENNEDY SPACE CENTER, NASA
KENNEDY SPACE CENTER, FLORIDA

REPLACE FEEDERS AND DUCTS
VAB AREA NORTH

MODIFIED ONE LINE DIAGRAM SHEET 2
AND NEW CABLE SCHEDULE

FILE NO. | SIZE F | DWG. NO. 79K38608 | –

PROJ. NO. 98778 | SHEET 6

A/E FILE No. 0601\0601-25\0601-25.1
FILE: MOD_1LINE-2.DWG
THIS DRAWING PREPARED BY AutoCAD 2008

E4

NOTICE – WHEN GOVERNMENT DRAWINGS, SPECIFICATIONS, OR OTHER DATA ARE USED FOR ANY PURPOSE OTHER THAN IN CONNECTION WITH A DEFINITELY RELATED GOVERNMENT PROCUREMENT OPERATION, THE UNITED STATES GOVERNMENT THEREBY INCURS NO RESPONSIBILITY NOR ANY OBLIGATION WHATSOEVER; AND THE FACT THAT THE GOVERNMENT MAY HAVE FORMULATED, FURNISHED, OR IN ANY WAY SUPPLIED THE SAID DRAWINGS, SPECIFICATIONS, OR OTHER DATA IS NOT TO BE REGARDED BY IMPLICATION OR OTHERWISE AS IN ANY MANNER LICENSING THE HOLDER OR ANY OTHER PERSON OR CORPORATION, OR CONVEYING ANY RIGHTS OR PERMISSION TO MANUFACTURE, USE, OR SELL ANY PATENTED INVENTION THAT MAY IN ANY WAY BE RELATED THERETO.

SPECIFIC NOTES

A. FOR GENERAL NOTES AND LEGEND, SEE DRAWING V2.

B. THIS AREA TO BE MODIFIED PER DRAWING NUMBER 79K38612.

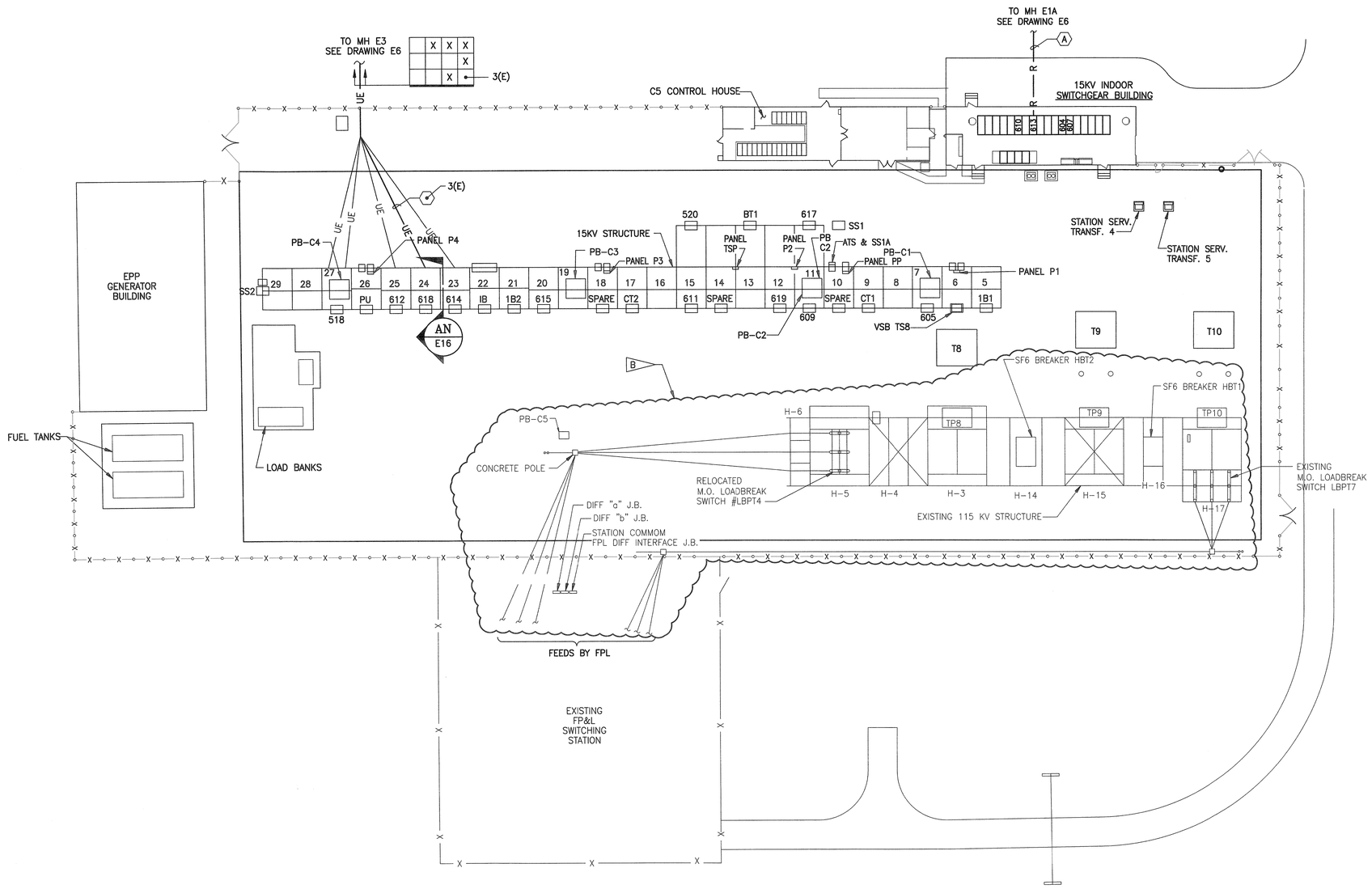

EXISTING ELECTRICAL SITE PLAN
C5 SUBSTATION

SCALE: 1:250

N

GRAPHIC SCALE

1:250 5 0 5 10 15 20 m

SYM.	ZONE	DESCRIPTION	DATE	APPROVED
		REVISIONS		

ENGINEER OF RECORD: W. WILSON — PE License No. 22283

Fred Wilson & Associates, Inc.
Consulting Engineers
C.A. NO. 7188 • 904-399-8636
3970 Hendricks Avenue • Jacksonville, FL 32207

SIGNATURES		DATE
DESIGNED	V. KELEMEN	4/09
DRAWN	V. KELEMEN	4/09
CHECKED	H. OBERN	6/09
SUBMITTED	V. Kelemen	9/25/09
APPROVED	[illegible]	9/25/09
APPROVED		
APPROVED		
APPROVED		
APPROVED		
APPROVED		

NATIONAL AERONAUTICS AND SPACE ADMINISTRATION
JOHN F. KENNEDY SPACE CENTER, NASA
KENNEDY SPACE CENTER, FLORIDA

REPLACE FEEDERS AND DUCTS
VAB AREA NORTH

SITE PLAN
C5 SUBSTATION

A/E FILE No. 0601\0601-25\0601-25.1
FILE: C5-SITE.DWG
THIS DRAWING PREPARED BY AutoCAD 2008

E5

FILE NO.	SIZE	DWG. NO.
	F	79K38608
PROJ. NO. 98778		SHEET 7

KSC FORM 1-11A (REV 6/91) (C/G 12/93) 09/25/2009 F:\ELECT\0601\0601-25\0601-25.1\C5-SITE

NOTICE – WHEN GOVERNMENT DRAWINGS, SPECIFICATIONS, OR OTHER DATA ARE USED FOR ANY PURPOSE OTHER THAN IN CONNECTION WITH A DEFINITELY RELATED GOVERNMENT PROCUREMENT OPERATION, THE UNITED STATES GOVERNMENT THEREBY INCURS NO RESPONSIBILITY NOR ANY OBLIGATION WHATSOEVER; AND THE FACT THAT THE GOVERNMENT MAY HAVE FORMULATED, FURNISHED, OR IN ANY WAY SUPPLIED THE SAID DRAWINGS, SPECIFICATIONS, OR OTHER DATA IS NOT TO BE REGARDED BY IMPLICATION OR OTHERWISE AS IN ANY MANNER LICENSING THE HOLDER OR ANY OTHER PERSON OR CORPORATION, OR CONVEYING ANY RIGHTS OR PERMISSION TO MANUFACTURE, USE, OR SELL ANY PATENTED INVENTION THAT MAY IN ANY WAY BE RELATED THERETO.

MATCHLINE – SEE DWG E7

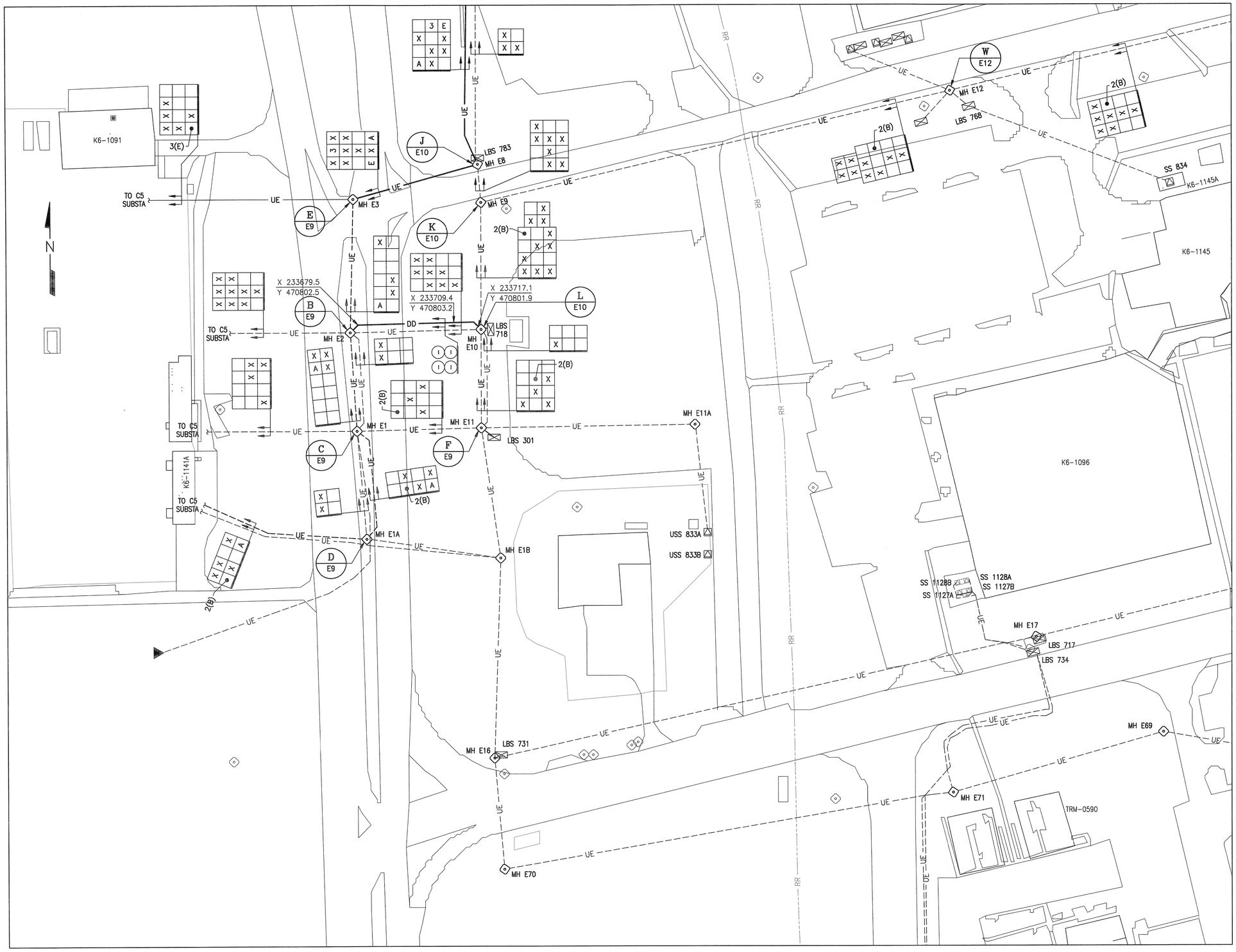

SPECIFIC NOTES:

A. FOR GENERAL NOTES AND LEGEND, SEE DRAWING V2.

GRAPHIC SCALE

1:500 — 0 5 10 20 30 40 50m

SITE PLAN – AREA 1

SCALE: 1:500

A/E FILE No. 0601\0601-25\0601-25.1
FILE: AREA01.DWG
THIS DRAWING PREPARED BY AutoCAD 2008

E6

SYM.	ZONE	DESCRIPTION	DATE	APPROVED
		REVISIONS		

ENGINEER OF RECORD: W. WILSON — PE License No. 22283

Fred Wilson & Associates, Inc.
Consulting Engineers
C.A. NO. 7188 • 904-398-8636
3970 Hendricks Avenue • Jacksonville, FL 32207

SIGNATURES		DATE
DESIGNED	V. KELEMEN	4/09
DRAWN	V. KELEMEN	4/09
CHECKED	H. OBERN	6/09
SUBMITTED	W. Wilson	9/25/09
APPROVED	R. Kile	9/25/09
APPROVED		
APPROVED		
APPROVED		
APPROVED		
APPROVED		

NATIONAL AERONAUTICS AND SPACE ADMINISTRATION
JOHN F. KENNEDY SPACE CENTER, NASA
KENNEDY SPACE CENTER, FLORIDA

REPLACE FEEDERS AND DUCTS
VAB AREA NORTH

SITE PLAN
AREA 1

FILE NO.	SIZE	DWG. NO.	
	F	79K38608	–
PROJ. NO. 98778		SHEET 8	

KSC FORM 1-11A (REV 6/91) (C/G 12/93)

09/25/2009 F:\ELECT\0601\0601-25\0601-25.1\AREA01

NOTICE – WHEN GOVERNMENT DRAWINGS, SPECIFICATIONS, OR OTHER DATA ARE USED FOR ANY PURPOSE OTHER THAN IN CONNECTION WITH A DEFINITELY RELATED GOVERNMENT PROCUREMENT OPERATION, THE UNITED STATES GOVERNMENT THEREBY INCURS NO RESPONSIBILITY, NOR ANY OBLIGATION WHATSOEVER; AND THE FACT THAT THE GOVERNMENT MAY HAVE FORMULATED, FURNISHED, OR IN ANY WAY SUPPLIED THE SAID DRAWINGS, SPECIFICATIONS OR OTHER DATA, IS NOT TO BE REGARDED BY IMPLICATION OR OTHERWISE AS IN ANY MANNER LICENSING THE HOLDER OR ANY OTHER PERSON OR CORPORATION, OR CONVEYING ANY RIGHTS OR PERMISSION TO MANUFACTURE, USE, OR SELL ANY PATENTED INVENTION THAT MAY IN ANY WAY BE RELATED THERETO.

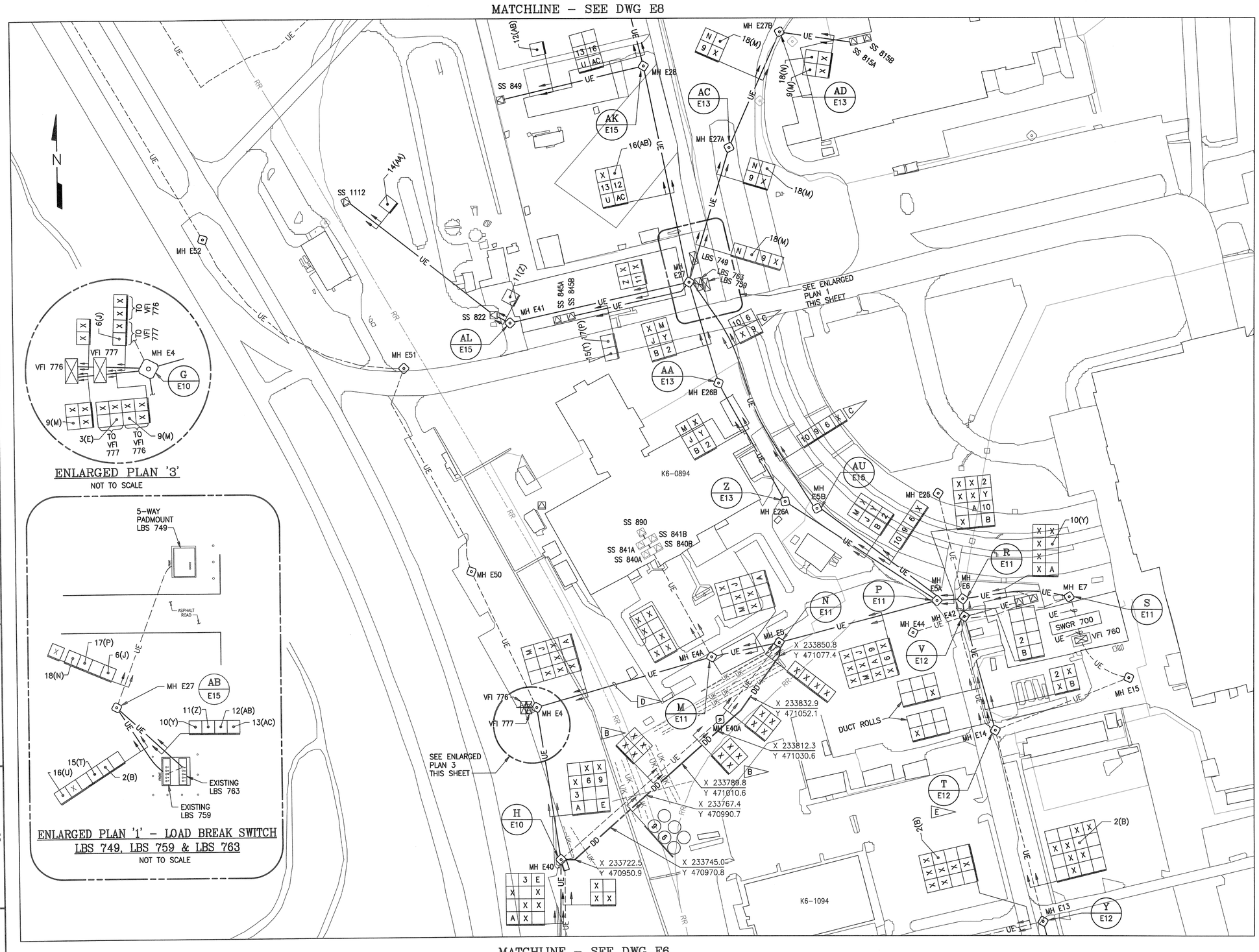

SITE PLAN – AREA 2

SCALE: 1:1000

SPECIFIC NOTES:

A. FOR GENERAL NOTES AND LEGEND, SEE DRAWING V2.

B. DUCT ROLLS BETWEEN MANHOLE E40 AND MANHOLE E40A.

C. DUCT CONFIGURATION CHANGES BETWEEN MH E5B AND MH E27 CONTRACTOR TO VERIFY CABLE COMING INTO MH E27 AND MARK ANY CHANGES ON THE RECORD DRAWINGS (AS BUILT).

D. DUCT BANK IS COLLAPSED.

E. FIREPROOFING TAPE ON CABLES IN MANHOLE MH E14 MAY CONTAIN ASBESTOS. CONTRACTOR SHALL ABATE ANY ACM FOUND ON CABLES BEING REMOVED PER SPECIFICATION SECTION 13285.

SYM.	ZONE	DESCRIPTION	DATE	APPROVED
		REVISIONS		

ENGINEER OF RECORD: W. WILSON — PE License No. 22283

Fred Wilson & Associates, Inc.
Consulting Engineers
C.A. NO. 7188 • 904-390-8634
3970 Hendricks Avenue • Jacksonville, FL 32207

SIGNATURES		DATE
DESIGNED	V. KELEMEN	4/09
DRAWN	V. KELEMEN	4/09
CHECKED	H. OBERN	6/09
SUBMITTED		9/25/09
APPROVED		9/25/09
APPROVED		
APPROVED		
APPROVED		
APPROVED		
APPROVED		

NATIONAL AERONAUTICS AND SPACE ADMINISTRATION
JOHN F. KENNEDY SPACE CENTER, NASA
KENNEDY SPACE CENTER, FLORIDA

REPLACE FEEDERS AND DUCTS
VAB AREA NORTH

SITE PLAN
AREA 2

FILE NO.	SIZE	DWG. NO.	
	F	79K38608	–
PROJ. NO. 98778		SHEET 9	

A/E FILE No. 0601\0601-25\0601-25.1
FILE: AREA02.DWG
THIS DRAWING PREPARED BY AutoCAD 2008

E7

KSC FORM 1-11A (REV 6/91) (C/G 12/93) | 09/25/2009 | F:\ELECT\0601\0601-25\0601-25.1\AREA02

NOTICE – WHEN GOVERNMENT DRAWINGS, SPECIFICATIONS, OR OTHER DATA ARE USED FOR ANY PURPOSE OTHER THAN IN CONNECTION WITH A DEFINITELY RELATED GOVERNMENT PROCUREMENT OPERATION, THE UNITED STATES GOVERNMENT THEREBY INCURS NO RESPONSIBILITY NOR ANY OBLIGATION WHATSOEVER; AND THE FACT THAT THE GOVERNMENT MAY HAVE FORMULATED, FURNISHED, OR IN ANY WAY SUPPLIED THE SAID DRAWINGS, SPECIFICATIONS, OR OTHER DATA IS NOT TO BE REGARDED BY IMPLICATION OR OTHERWISE AS IN ANY MANNER LICENSING THE HOLDER OR ANY OTHER PERSON OR CORPORATION, OR CONVEYING ANY RIGHTS OR PERMISSION TO MANUFACTURE, USE, OR SELL ANY PATENTED INVENTION THAT MAY IN ANY WAY BE RELATED THERETO.

ENLARGED PLAN '1'
NOT TO SCALE

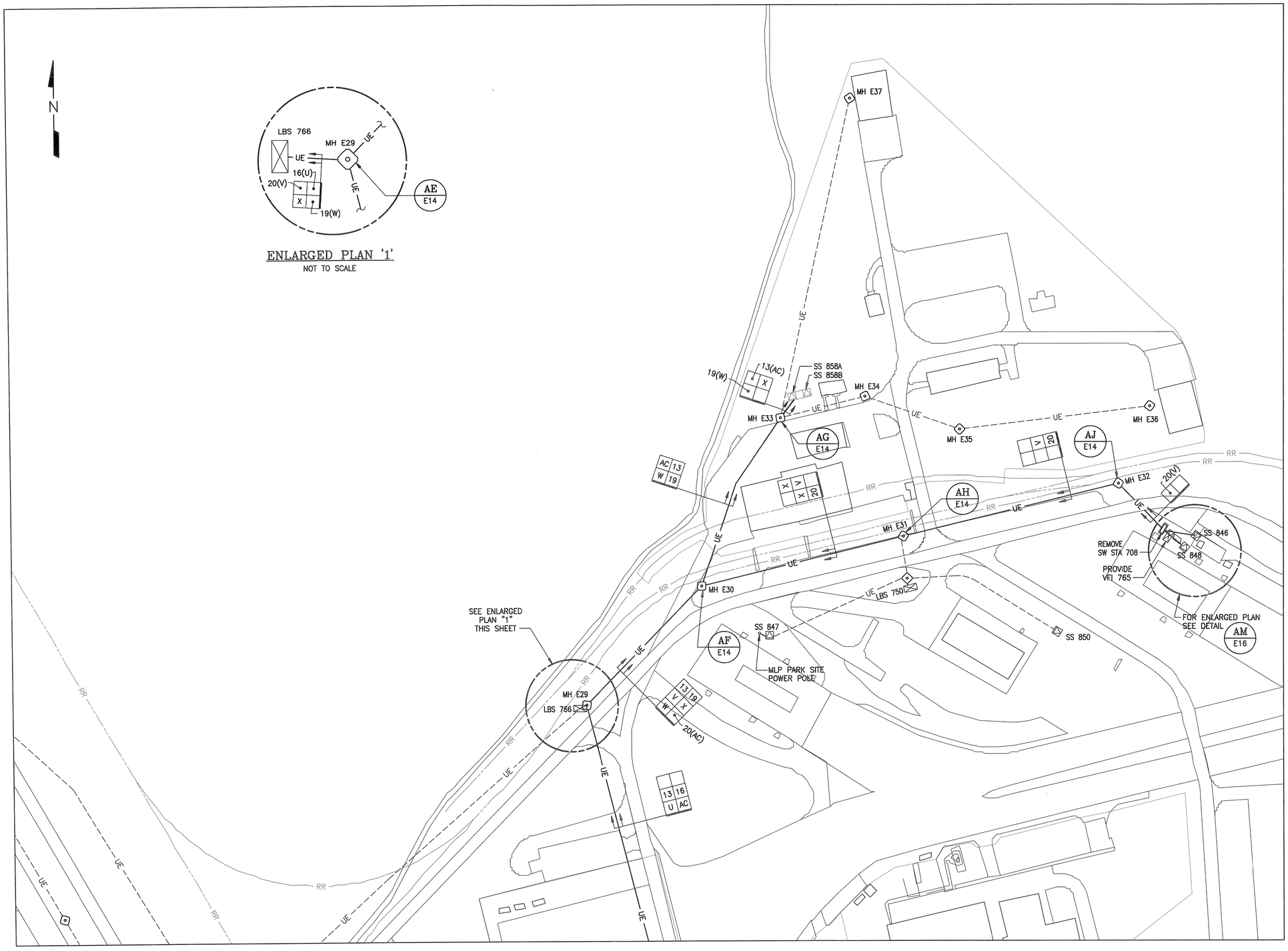

MATCHLINE – SEE DWG E7

SPECIFIC NOTES:

A. FOR GENERAL NOTES AND LEGEND, SEE DRAWING V2.

GRAPHIC SCALE
1:1000 — 0 50 100 m

SITE PLAN – AREA 3

SCALE: 1:1000

SYM.	ZONE	DESCRIPTION	DATE	APPROVED
		REVISIONS		

ENGINEER OF RECORD: W. WILSON — PE License No. 22283

Fred Wilson & Associates, Inc.
Consulting Engineers
C.A. NO. 7108 • 904-398-8636
3970 Hendricks Avenue • Jacksonville, FL 32207

SIGNATURES		DATE
DESIGNED	V. KELEMEN	4/09
DRAWN	V. KELEMEN	4/09
CHECKED	H. OBERN	6/09
SUBMITTED	W. Wilson	9/25/09
APPROVED	[illegible]	9/25/09
APPROVED		
APPROVED		
APPROVED		
APPROVED		
APPROVED		

NATIONAL AERONAUTICS AND SPACE ADMINISTRATION
JOHN F. KENNEDY SPACE CENTER, NASA
KENNEDY SPACE CENTER, FLORIDA

REPLACE FEEDERS AND DUCTS
VAB AREA NORTH

SITE PLAN
AREA 3

FILE NO.	SIZE	DWG. NO.	
	F	79K38608	–
PROJ. NO. 98778		SHEET 10	

A/E FILE No. 0601\0601-25\0601-25.1
FILE: AREA03.DWG
THIS DRAWING PREPARED BY AutoCAD 2008

E8

NOTICE — WHEN GOVERNMENT DRAWINGS, SPECIFICATIONS, OR OTHER DATA ARE USED FOR ANY PURPOSE OTHER THAN IN CONNECTION WITH A DEFINITELY RELATED GOVERNMENT PROCUREMENT OPERATION, THE UNITED STATES GOVERNMENT THEREBY INCURS NO RESPONSIBILITY NOR ANY OBLIGATION WHATSOEVER; AND THE FACT THAT THE GOVERNMENT MAY HAVE FORMULATED, FURNISHED, OR IN ANY WAY SUPPLIED THE SAID DRAWINGS, SPECIFICATIONS, OR OTHER DATA IS NOT TO BE REGARDED BY IMPLICATION OR OTHERWISE AS IN ANY MANNER LICENSING THE HOLDER OR ANY OTHER PERSON OR CORPORATION, OR CONVEYING ANY RIGHTS OR PERMISSION TO MANUFACTURE, USE, OR SELL ANY PATENTED INVENTION THAT MAY IN ANY WAY BE RELATED THERETO.

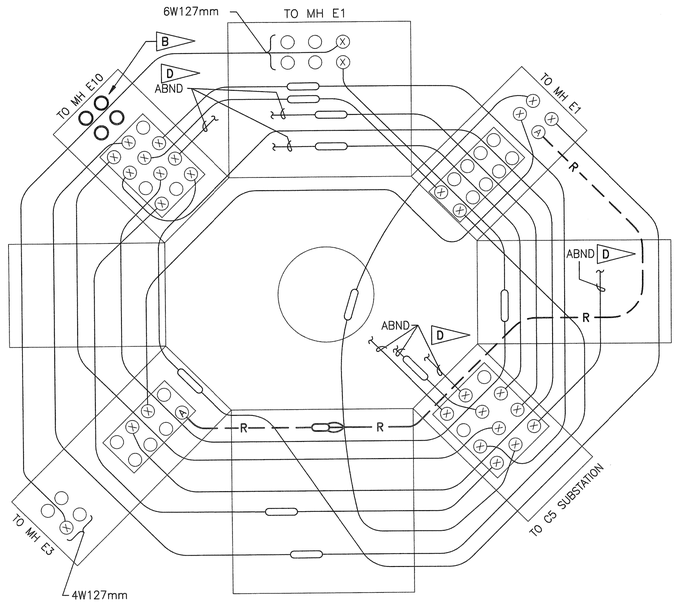

DETAIL MH E2 — B / E6 — NOT TO SCALE — E

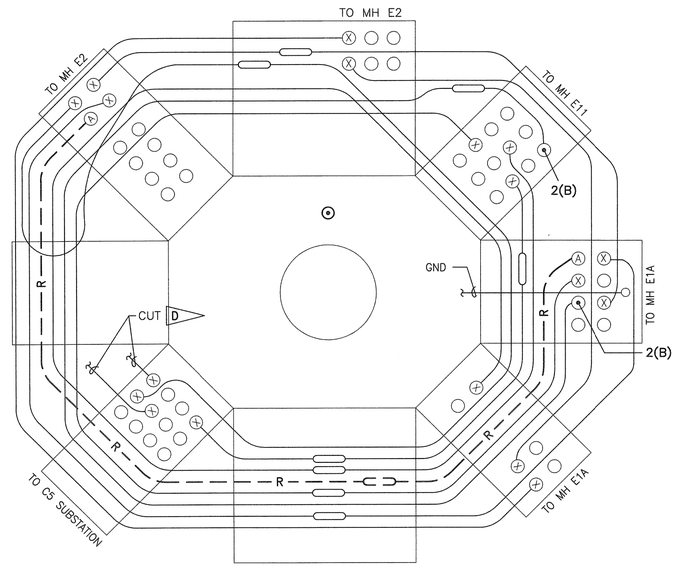

DETAIL MH E1 — C / E6 — NOT TO SCALE — E

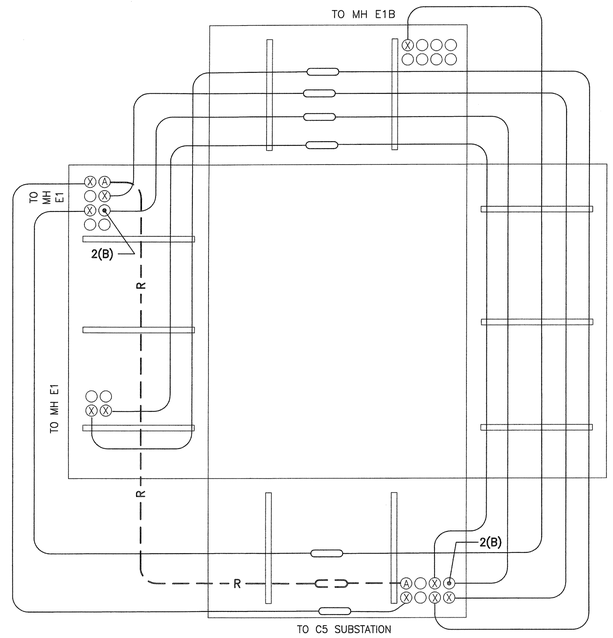

DETAIL MH E1A — D / E6 — NOT TO SCALE — E

SPECIFIC NOTES

A. FOR GENERAL NOTES AND LEGEND, SEE DRAWING V2.

B. CORE DRILL FOR DIRECTIONAL DRILLED 4 WAY 127mm DUCT. SEE DETAIL AT/E16.

C. CABLE FIREPROOFING MAY CONTAIN ASBESTOS. CONTRACTOR SHALL ABATE ANY ACM FOUND ON CABLE BEING REMOVED PER SPECIFICATION SECTION 02 82 13.00 98.

D. CUT CABLE BACK SO THAT ONLY 305mm OF CABLE EXTENDS INTO MANHOLE FROM THE DUCT ENTRY. CONTRACTOR TO PROVIDE END CAP ON ABANDONED CABLE.

E. PROVIDE CABLE TAGS ON ALL NEW CABLES. SEE CIRCUIT IDENTIFICATION TAG DETAIL A/V2.

F. PROVIDE CABLE RACK AND RACK ARM(S). SEE DETAIL BN/E16.

G. FEEDER 517/614 SWAP MADE IN MH E3 PER PCN 97397.1. CONTRACTOR TO VERIFY. FWA NOT SUPPLIED WITH AS-BUILT OF SWAP.

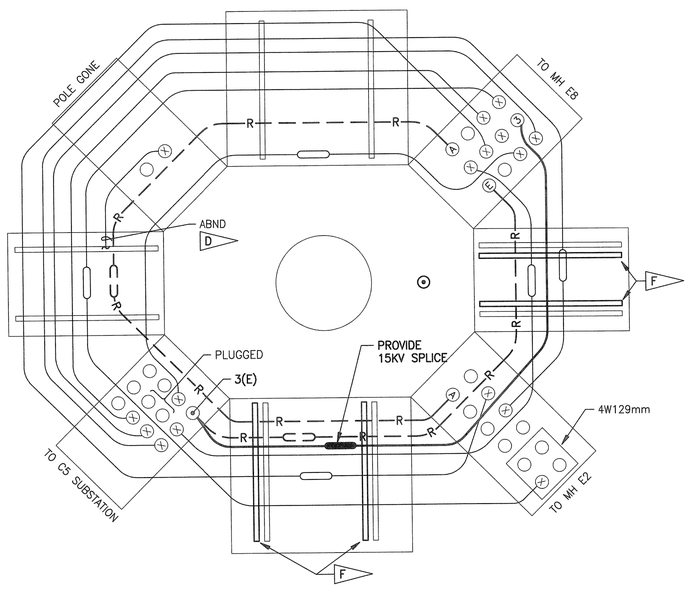

DETAIL MH E3 — E / E6 — G — NOT TO SCALE — E

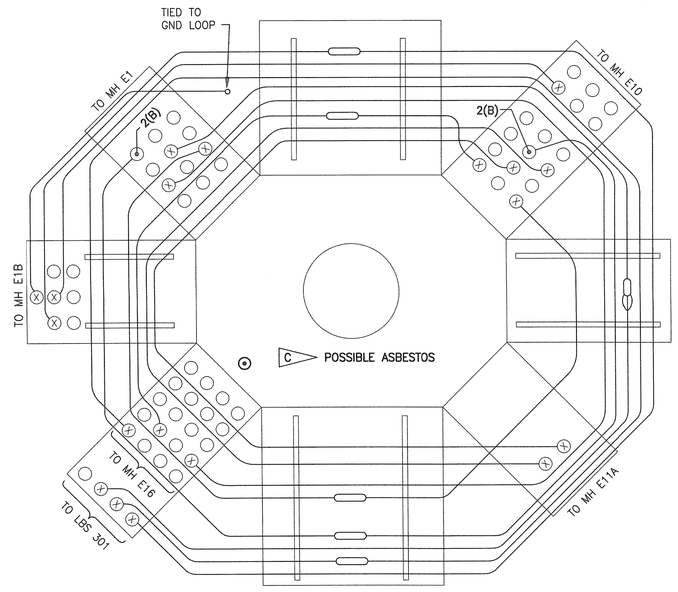

DETAIL MH E11 — F / E6 — NOT TO SCALE — E

SYM.	ZONE	DESCRIPTION	DATE	APPROVED
		REVISIONS		

ENGINEER OF RECORD: W. WILSON — PE License No. 22283

Fred Wilson & Associates, Inc. Consulting Engineers — C.A. NO. 7188 • 904-398-8636 — 3970 Hendricks Avenue • Jacksonville, FL 32207

SIGNATURES		DATE
DESIGNED	V. KELEMEN	4/09
DRAWN	V. KELEMEN	4/09
CHECKED	H. OBERN	6/09
SUBMITTED	W. Wilson	9/25/09
APPROVED	[illegible]	9/25/09
APPROVED		
APPROVED		
APPROVED		
APPROVED		
APPROVED		

NATIONAL AERONAUTICS AND SPACE ADMINISTRATION
JOHN F. KENNEDY SPACE CENTER, NASA
KENNEDY SPACE CENTER, FLORIDA

REPLACE FEEDERS AND DUCTS VAB AREA NORTH

MANHOLE LAYOUTS SHEET 1

FILE NO.	SIZE	DWG. NO.	
	F	79K38608	—
PROJ. NO. 98778		SHEET 11	

A/E FILE No. 0601\0601-25\0601-25.1
FILE: MHDET1.DWG
THIS DRAWING PREPARED BY AutoCAD 2008

E9

NOTICE – WHEN GOVERNMENT DRAWINGS, SPECIFICATIONS, OR OTHER DATA ARE USED FOR ANY PURPOSE OTHER THAN IN CONNECTION WITH A DEFINITELY RELATED GOVERNMENT PROCUREMENT OPERATION, THE UNITED STATES GOVERNMENT THEREBY INCURS NO RESPONSIBILITY NOR ANY OBLIGATION WHATSOEVER; AND THE FACT THAT THE GOVERNMENT MAY HAVE FORMULATED, FURNISHED, OR IN ANY WAY SUPPLIED THE SAID DRAWINGS, SPECIFICATIONS, OR OTHER DATA IS NOT TO BE REGARDED BY IMPLICATION OR OTHERWISE AS IN ANY MANNER LICENSING THE HOLDER OR ANY OTHER PERSON OR CORPORATION, OR CONVEYING ANY RIGHTS OR PERMISSION TO MANUFACTURE, USE, OR SELL ANY PATENTED INVENTION THAT MAY IN ANY WAY BE RELATED THERETO.

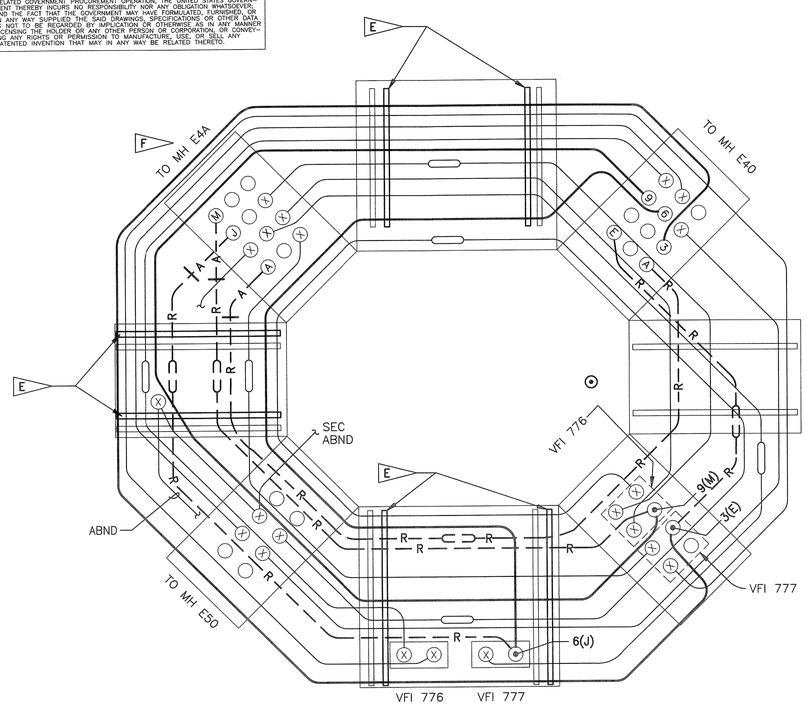

DETAIL MH E4 — G / E7
NOT TO SCALE

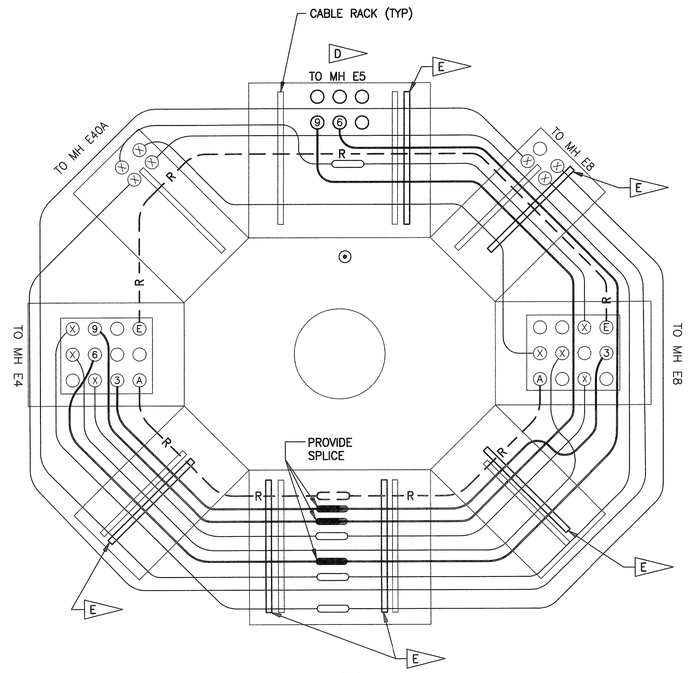

DETAIL MH E40 — H / E7
NOT TO SCALE

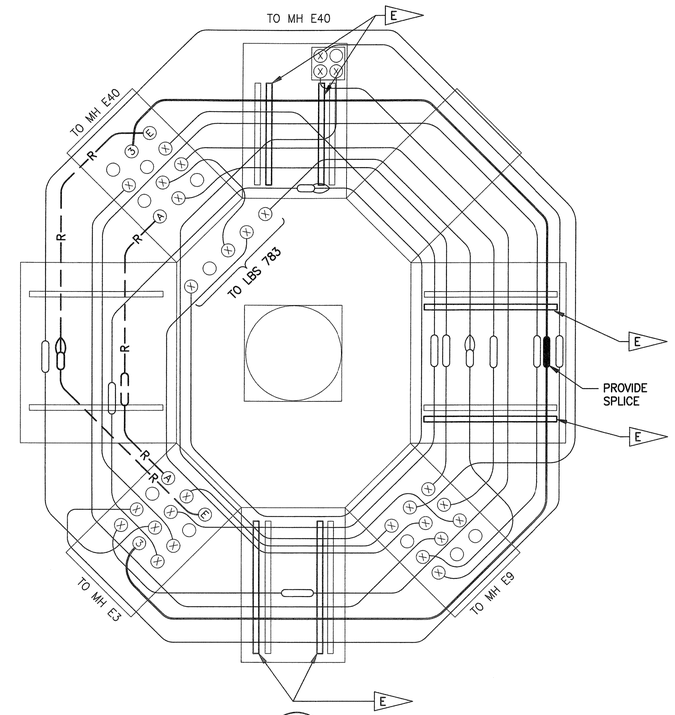

DETAIL MH E8 — J / E6
NOT TO SCALE

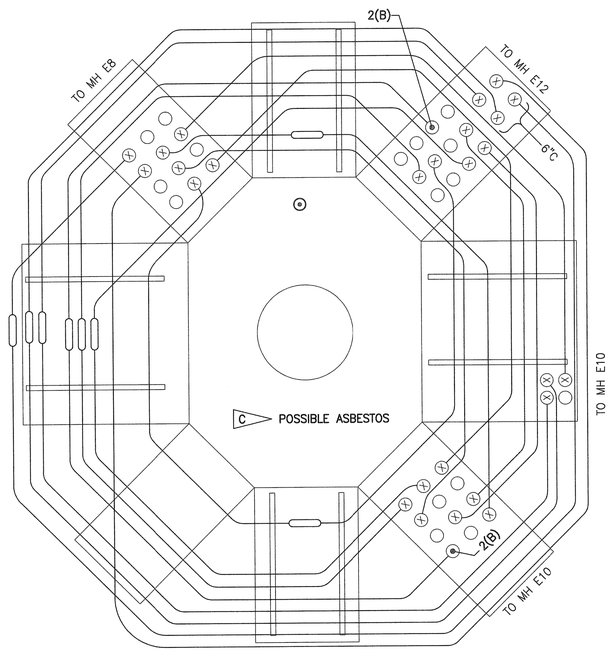

DETAIL MH E9 — K / E6
NOT TO SCALE

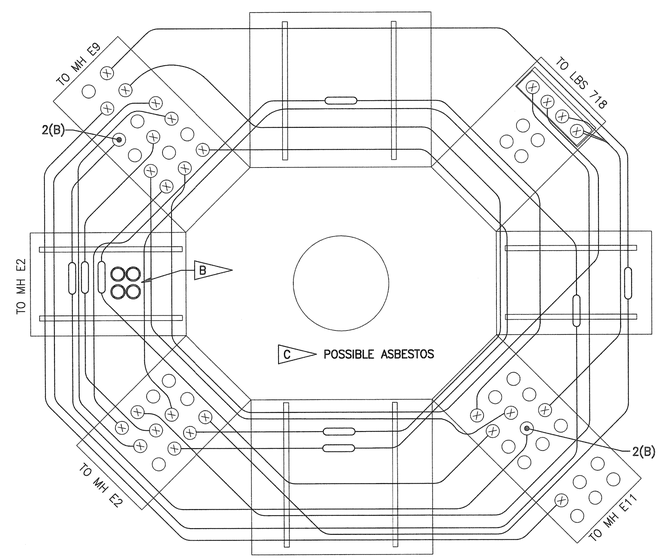

DETAIL MH E10 — L / E6
NOT TO SCALE

SPECIFIC NOTES

A. FOR GENERAL NOTES AND LEGEND, SEE DRAWING V2.

B. CORE DRILL FOR DIRECTIONAL DRILLED 4 WAY 127mm DUCT. SEE DETAIL AT/E16.

C. CABLE FIREPROOFING MAY CONTAIN ASBESTOS. CONTRACTOR SHALL ABATE ANY ACM FOUND ON CABLE BEING REMOVED PER SPECIFICATION SECTION 02 82 13.00 98.

D. CORE DRILL FOR DIRECTIONAL DRILLED 6 WAY 127mm DUCT. SEE DETAIL AT/E16.

E. PROVIDE CABLE RACK AND RACK ARM(S). SEE DETAIL BN/E16.

F. ABANDON CABLES ⟨A⟩, ⟨J⟩ AND ⟨M⟩ BETWEEN MANHOLE E4 AND MANHOLE E4A. DUCT BANK IS COLLAPSED.

G. PROVIDE CABLE TAGS ON ALL NEW CABLES. SEE CIRCUIT IDENTIFICATION TAG DETAIL A/V2.

SYM.	ZONE	DESCRIPTION	DATE	APPROVED

REVISIONS

ENGINEER OF RECORD: W. WILSON — PE License No. 22283

Fred Wilson & Associates, Inc. Consulting Engineers
C.A. NO. 7188 • 904-398-8636
7970 Hendricks Avenue • Jacksonville, FL 32207

SIGNATURES		DATE
DESIGNED	V. KELEMEN	4/09
DRAWN	V. KELEMEN	4/09
CHECKED	H. OBERN	6/09
SUBMITTED	W. Wilson	9/25/09
APPROVED	[illegible]	9/25/09
APPROVED		
APPROVED		
APPROVED		
APPROVED		
APPROVED		

NATIONAL AERONAUTICS AND SPACE ADMINISTRATION
JOHN F. KENNEDY SPACE CENTER, NASA
KENNEDY SPACE CENTER, FLORIDA

REPLACE FEEDERS AND DUCTS
VAB AREA NORTH

MANHOLE LAYOUTS
SHEET 2

FILE NO.	SIZE	DWG. NO.	
	F	79K38608	–
PROJ. NO. 98778		SHEET 12	

A/E FILE No. 0601\0601-25\0601-25.1
FILE: MHDET2.DWG
THIS DRAWING PREPARED BY AutoCAD 2008

E10

NOTICE – WHEN GOVERNMENT DRAWINGS, SPECIFICATIONS, OR OTHER DATA ARE USED FOR ANY PURPOSE OTHER THAN IN CONNECTION WITH A DEFINITELY RELATED GOVERNMENT PROCUREMENT OPERATION, THE UNITED STATES GOVERNMENT THEREBY INCURS NO RESPONSIBILITY NOR ANY OBLIGATION WHATSOEVER; AND THE FACT THAT SUCH GOVERNMENT MAY HAVE FORMULATED, FURNISHED, OR IN ANY WAY SUPPLIED THE SAID DRAWINGS, SPECIFICATIONS OR OTHER DATA IS NOT TO BE REGARDED BY IMPLICATION OR OTHERWISE AS IN ANY MANNER LICENSING THE HOLDER OR ANY OTHER PERSON OR CORPORATION, OR CONVEYING ANY RIGHTS OR PERMISSION TO MANUFACTURE, USE, OR SELL ANY PATENTED INVENTION THAT MAY IN ANY WAY BE RELATED THERETO.

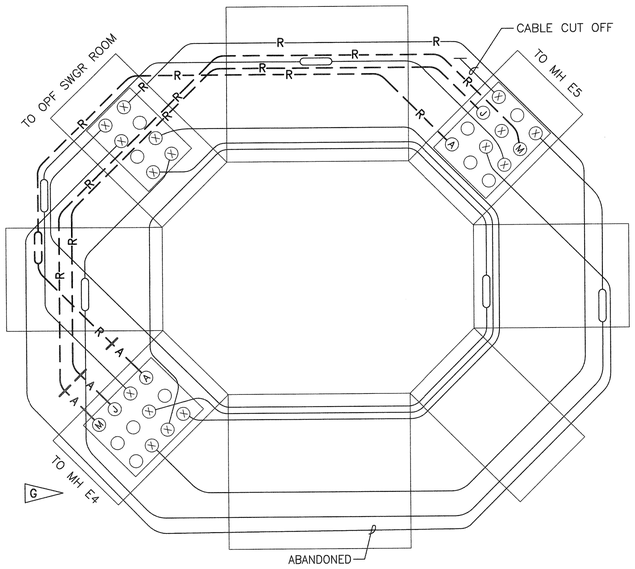

DETAIL MH E4A (M / E7)
NOT TO SCALE
H

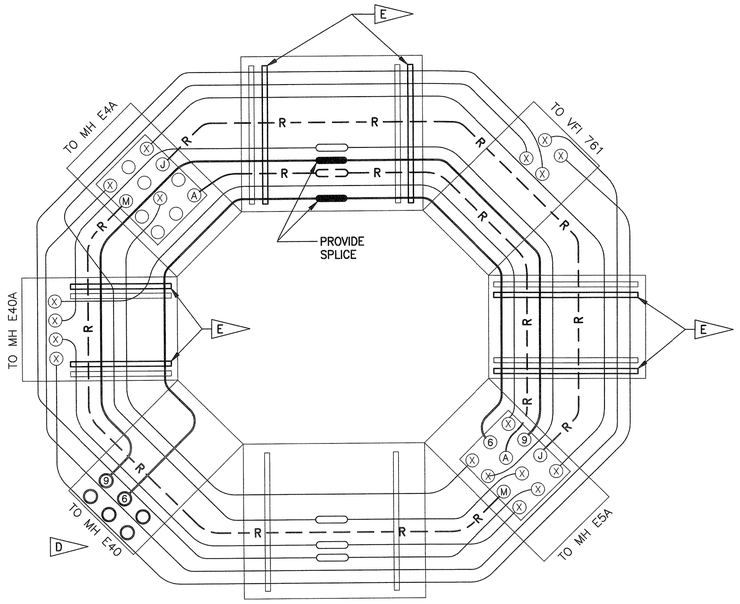

DETAIL MH E5 (N / E7)
NOT TO SCALE
H

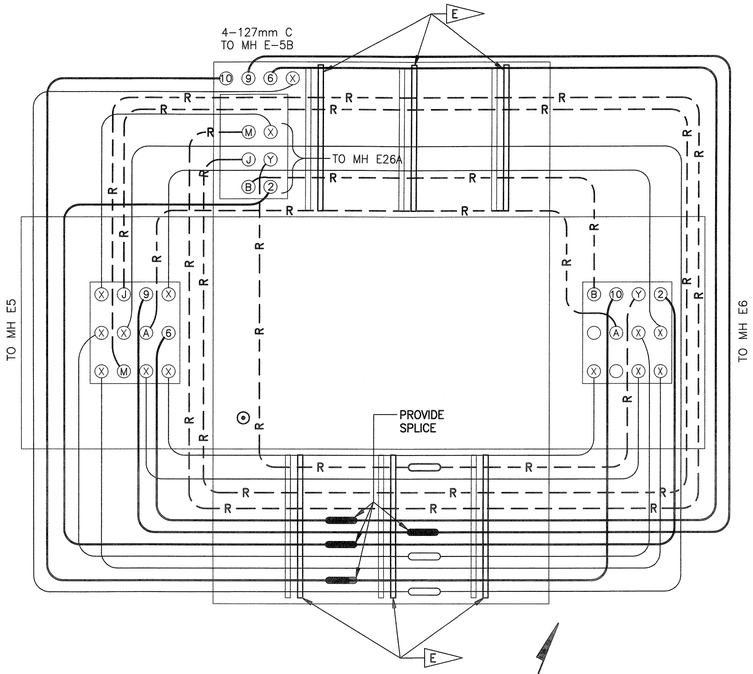

DETAIL MH E5A (P / E7)
NOT TO SCALE
H

SPECIFIC NOTES

A. FOR GENERAL NOTES AND LEGEND, SEE DRAWING V2.

B. CABLE FIREPROOFING MAY CONTAIN ASBESTOS. CONTRACTOR SHALL ABATE ANY ACM FOUND ON CABLE BEING REMOVED PER SPECIFICATION SECTION 02 82 13.00 98.

C. LIVE END SPLICE TO BE INSTALLED PER PCN 97506.

D. CORE DRILL FOR DIRECTIONAL DRILLED 6 WAY 127mm DUCT. SEE DETAIL AT/E16.

E. PROVIDE CABLE RACK AND RACK ARM(S). SEE DETAIL BN/E16.

F. CABLE TO BE REMOVED FROM UTILITY ANNEX TO MH E7 PER PCN 97506. REMOVE CABLE (A) FROM MH E7 TO MH E2.

G. ABANDON CABLES (A), (J) AND (M) BETWEEN MANHOLE E4 AND MANHOLE E4A. DUCT BANK IS COLLAPSED.

H. PROVIDE CABLE TAGS ON ALL NEW CABLES. SEE CIRCUIT IDENTIFICATION TAG DETAIL A/V2.

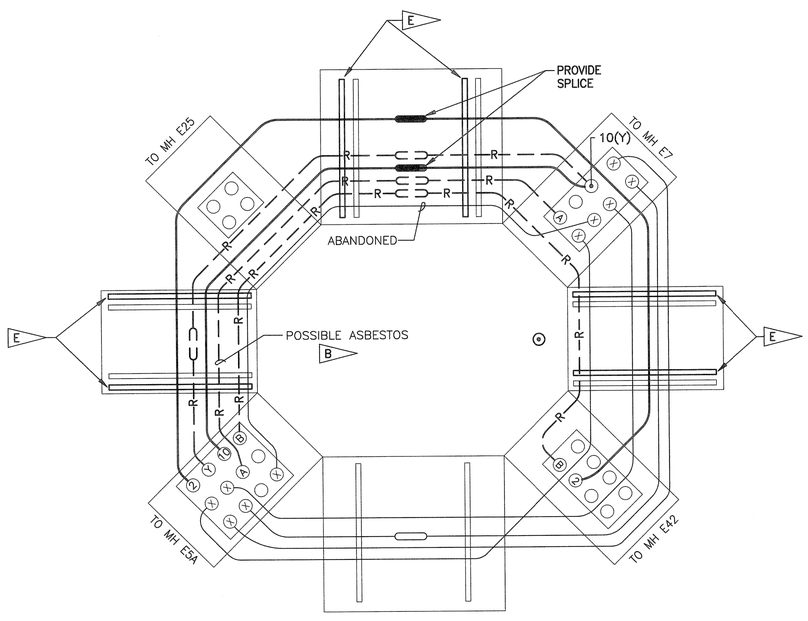

DETAIL MH E6 (R / E7)
NOT TO SCALE
H

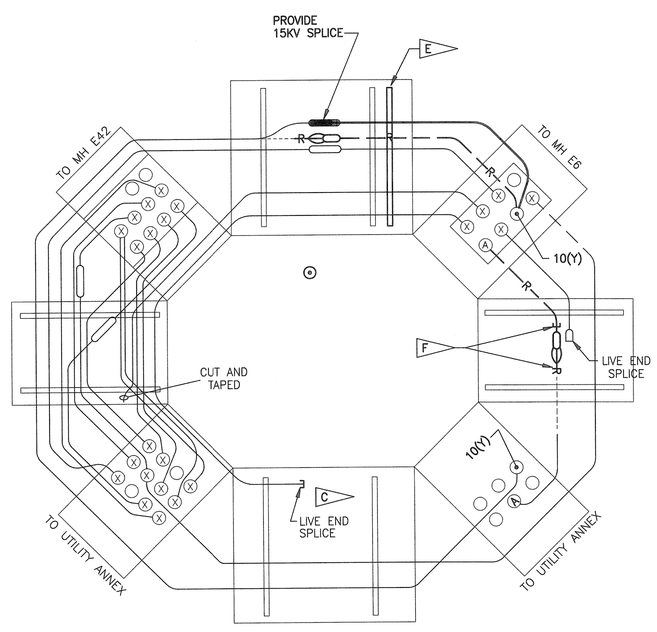

DETAIL MH E7 (S / E7)
NOT TO SCALE
H

SYM.	ZONE	DESCRIPTION	DATE	APPROVED

REVISIONS

ENGINEER OF RECORD: W. WILSON — PE License No. 22283

Fred Wilson & Associates, Inc.
Consulting Engineers
C.A. NO. 7188 • 904-398-8636
3970 Hendricks Avenue • Jacksonville, FL 32207

SIGNATURES		DATE
DESIGNED	V. KELEMEN	4/09
DRAWN	V. KELEMEN	4/09
CHECKED	H. OBERN	6/09
SUBMITTED	W. Wilson	9/25/09
APPROVED	[illegible]	9/25/09
APPROVED		
APPROVED		
APPROVED		
APPROVED		
APPROVED		

NATIONAL AERONAUTICS AND SPACE ADMINISTRATION
JOHN F. KENNEDY SPACE CENTER, NASA
KENNEDY SPACE CENTER, FLORIDA

REPLACE FEEDERS AND DUCTS VAB AREA NORTH

MANHOLE LAYOUTS SHEET 3

A/E FILE No. 0601\0601-25\0601-25.1
FILE: MHDET3.DWG
THIS DRAWING PREPARED BY AutoCAD 2008

E11

FILE NO.	SIZE	DWG. NO.	
	F	79K38608	–
PROJ. NO. 98778		SHEET 13	

NOTICE – WHEN GOVERNMENT DRAWINGS, SPECIFICATIONS, OR OTHER DATA ARE USED FOR ANY PURPOSE OTHER THAN IN CONNECTION WITH A DEFINITELY RELATED GOVERNMENT PROCUREMENT OPERATION, THE UNITED STATES GOVERNMENT THEREBY INCURS NO RESPONSIBILITY NOR ANY OBLIGATION WHATSOEVER; AND THE FACT THAT THE GOVERNMENT MAY HAVE FORMULATED, FURNISHED, OR IN ANY WAY SUPPLIED THE SAID DRAWINGS, SPECIFICATIONS, OR OTHER DATA IS NOT TO BE REGARDED BY IMPLICATION OR OTHERWISE AS IN ANY MANNER LICENSING THE HOLDER OR ANY OTHER PERSON OR CORPORATION, OR CONVEYING ANY RIGHTS OR PERMISSION TO MANUFACTURE, USE, OR SELL ANY PATENTED INVENTION THAT MAY IN ANY WAY BE RELATED THERETO.

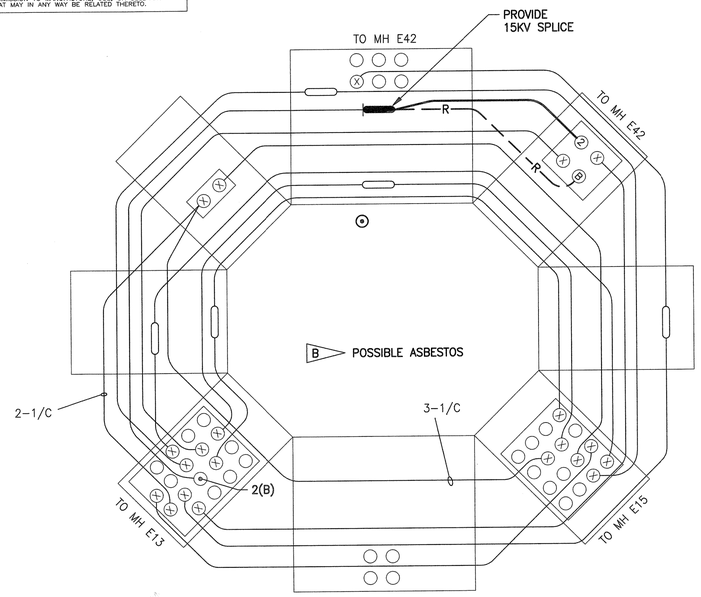

DETAIL MH E14 (T / E7)
NOT TO SCALE
D

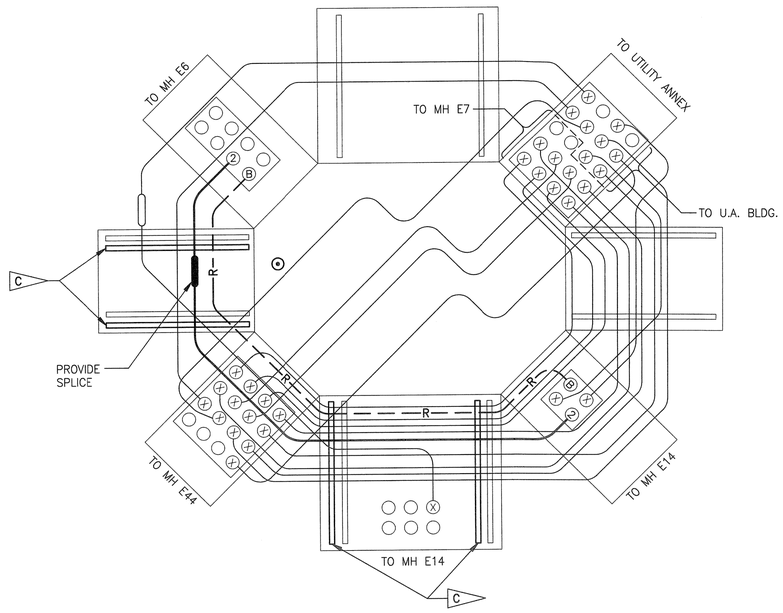

DETAIL MH E42 (V / E7)
NOT TO SCALE
D

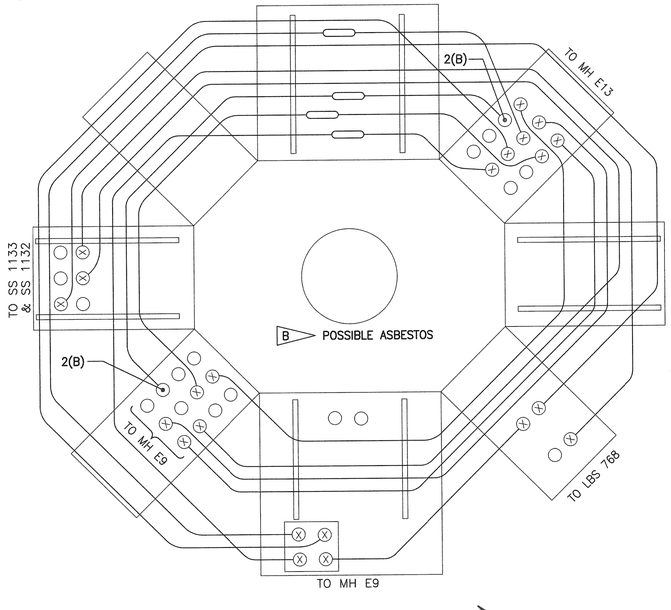

DETAIL MH E12 (W / E6)
NOT TO SCALE
D

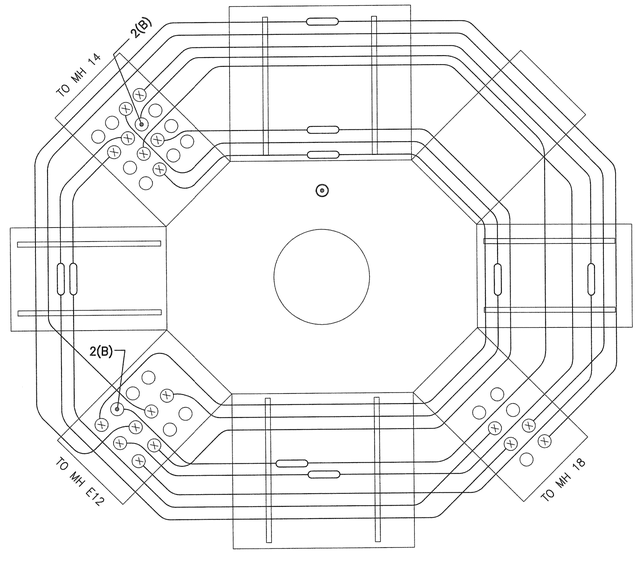

DETAIL MH E13 (Y / E7)
NOT TO SCALE
D

SPECIFIC NOTES

A. FOR GENERAL NOTES AND LEGEND, SEE DRAWING V2.

B CABLE FIREPROOFING MAY CONTAIN ASBESTOS. CONTRACTOR SHALL ABATE ANY ACM FOUND ON CABLE BEING REMOVED PER SPECIFICATION SECTION 02 82 13.00 98.

C PROVIDE CABLE RACK AND RACK ARM(S). SEE DETAIL BN/E16.

D PROVIDE CABLE TAGS ON ALL NEW CABLES. SEE CIRCUIT IDENTIFICATION TAG DETAIL A/V2.

SYM.	ZONE	DESCRIPTION	DATE	APPROVED
		REVISIONS		

ENGINEER OF RECORD: W. WILSON — PE License No. 22283

Fred Wilson & Associates, Inc.
Consulting Engineers
C.A. NO. 7188 • 904-398-8636
3970 Hendricks Avenue • Jacksonville, FL 32207

SIGNATURES		DATE
DESIGNED	V. KELEMEN	4/09
DRAWN	V. KELEMEN	4/09
CHECKED	H. OBERN	6/09
SUBMITTED	V. Kelemen	9/25/09
APPROVED		9/25/09
APPROVED		
APPROVED		
APPROVED		
APPROVED		
APPROVED		

NATIONAL AERONAUTICS AND SPACE ADMINISTRATION
JOHN F. KENNEDY SPACE CENTER, NASA
KENNEDY SPACE CENTER, FLORIDA

REPLACE FEEDERS AND DUCTS
VAB AREA NORTH

MANHOLE LAYOUTS
SHEET 4

FILE NO.	SIZE	DWG. NO.	
	F	79K38608	–
PROJ. NO. 98778		SHEET 14	

A/E FILE No. 0601\0601–25\0601–25.1
FILE: MHDET4.DWG
THIS DRAWING PREPARED BY AutoCAD 2008

E12

NOTICE – WHEN GOVERNMENT DRAWINGS, SPECIFICATIONS, OR OTHER DATA ARE USED FOR ANY PURPOSE OTHER THAN IN CONNECTION WITH A DEFINITELY RELATED GOVERNMENT PROCUREMENT OPERATION, THE UNITED STATES GOVERNMENT WINDS NO RESPONSIBILITY OR LIABILITY OR ANY OBLIGATION WHATSOEVER; AND THE FACT THAT THE GOVERNMENT MAY HAVE FORMULATED, FURNISHED, OR IN ANY WAY SUPPLIED THE SAID DRAWINGS, SPECIFICATIONS OR OTHER DATA IS NOT TO BE REGARDED BY IMPLICATION OR OTHERWISE AS IN ANY MANNER LICENSING THE HOLDER OR ANY OTHER PERSON OR CORPORATION, OR CONVEYING ANY RIGHTS OR PERMISSION TO MANUFACTURE, USE, OR SELL ANY PATENTED INVENTION THAT MAY IN ANY WAY BE RELATED THERETO.

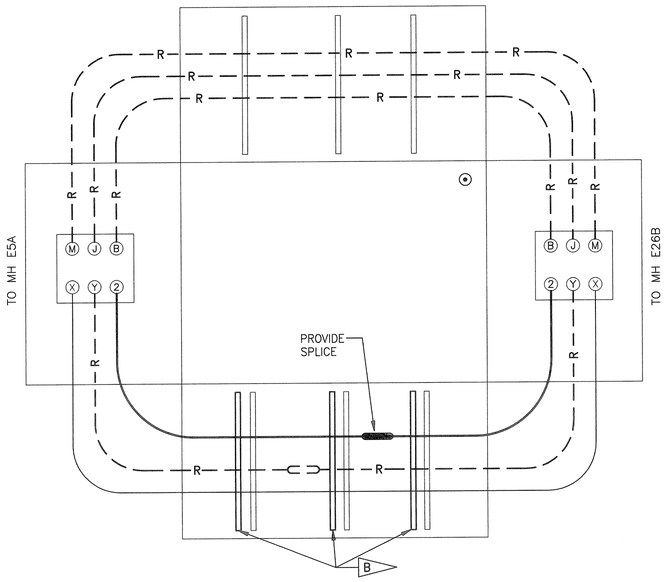

DETAIL MH E26A (Z / E7)
NOT TO SCALE
C

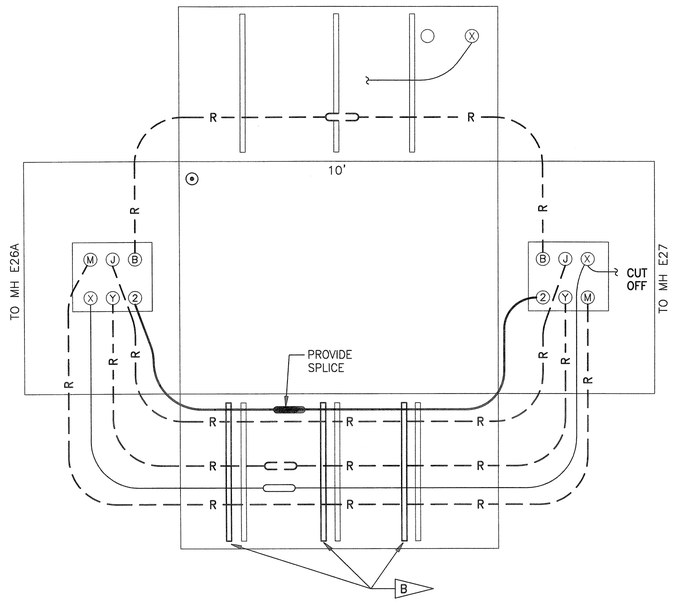

DETAIL MH E26B (AA / E7)
NOT TO SCALE
C

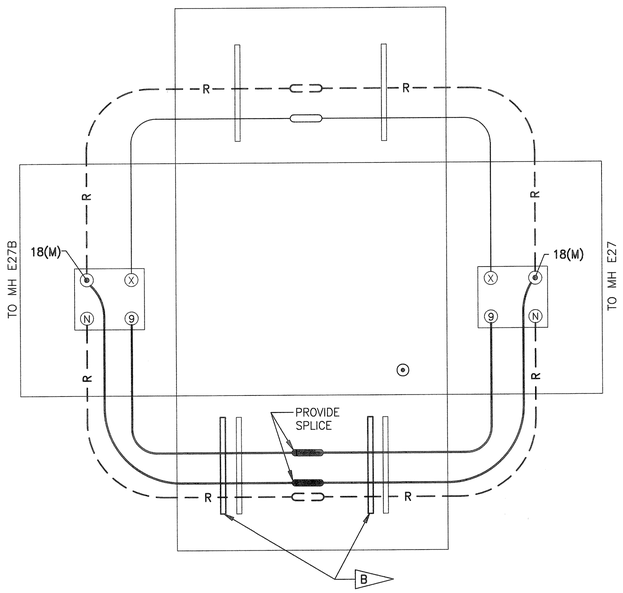

DETAIL MH E27A (AC / E7)
NOT TO SCALE
C

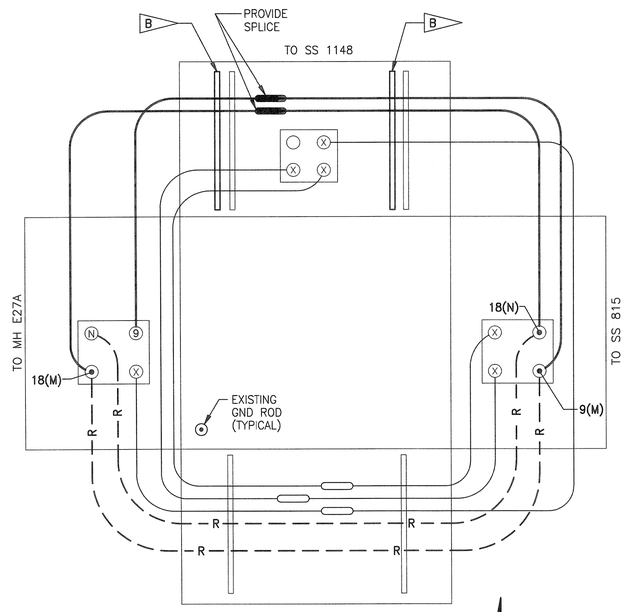

DETAIL MH E27B (AD / E7)
NOT TO SCALE
C

N

SPECIFIC NOTES

A. FOR GENERAL NOTES AND LEGEND, SEE DRAWING V2.

B — PROVIDE CABLE RACK AND RACK ARM(S). SEE DETAIL BN/E16.

C — PROVIDE CABLE TAGS ON ALL NEW CABLES. SEE CIRCUIT IDENTIFICATION TAG DETAIL A/V2.

SYM.	ZONE	DESCRIPTION	DATE	APPROVED
		REVISIONS		

ENGINEER OF RECORD: W. WILSON — PE License No. 22283

Fred Wilson & Associates, Inc.
Consulting Engineers
C.A. NO. 7188 • 904-398-8636
3970 Hendricks Avenue • Jacksonville, FL 32207

SIGNATURES		DATE
DESIGNED	V. KELEMEN	4/09
DRAWN	V. KELEMEN	4/09
CHECKED	H. OBERN	6/09
SUBMITTED		9/25/09
APPROVED		9/25/09
APPROVED		
APPROVED		
APPROVED		
APPROVED		
APPROVED		

NATIONAL AERONAUTICS AND SPACE ADMINISTRATION
JOHN F. KENNEDY SPACE CENTER, NASA
KENNEDY SPACE CENTER, FLORIDA

REPLACE FEEDERS AND DUCTS
VAB AREA NORTH

MANHOLE LAYOUTS
SHEET 5

FILE NO.	SIZE	DWG. NO.	
	F	79K38608	–
PROJ. NO. 98778		SHEET 15	

A/E FILE No. 0601\0601-25\0601-25.1
FILE: MHDET5.DWG
THIS DRAWING PREPARED BY AutoCAD 2008

E13

NOTICE - WHEN GOVERNMENT DRAWINGS, SPECIFICATIONS, OR OTHER DATA ARE USED FOR ANY PURPOSE OTHER THAN IN CONNECTION WITH A DEFINITELY RELATED GOVERNMENT PROCUREMENT OPERATION, THE UNITED STATES GOVERNMENT THEREBY INCURS NO RESPONSIBILITY NOR ANY OBLIGATION WHATSOEVER; AND THE FACT THAT THE GOVERNMENT MAY HAVE FORMULATED, FURNISHED, OR IN ANY WAY SUPPLIED THE SAID DRAWINGS, SPECIFICATIONS, OR OTHER DATA IS NOT TO BE REGARDED BY IMPLICATION OR OTHERWISE AS IN ANY MANNER LICENSING THE HOLDER OR ANY OTHER PERSON OR CORPORATION, OR CONVEYING ANY RIGHTS OR PERMISSION TO MANUFACTURE, USE, OR SELL ANY PATENTED INVENTION THAT MAY IN ANY WAY BE RELATED THERETO.

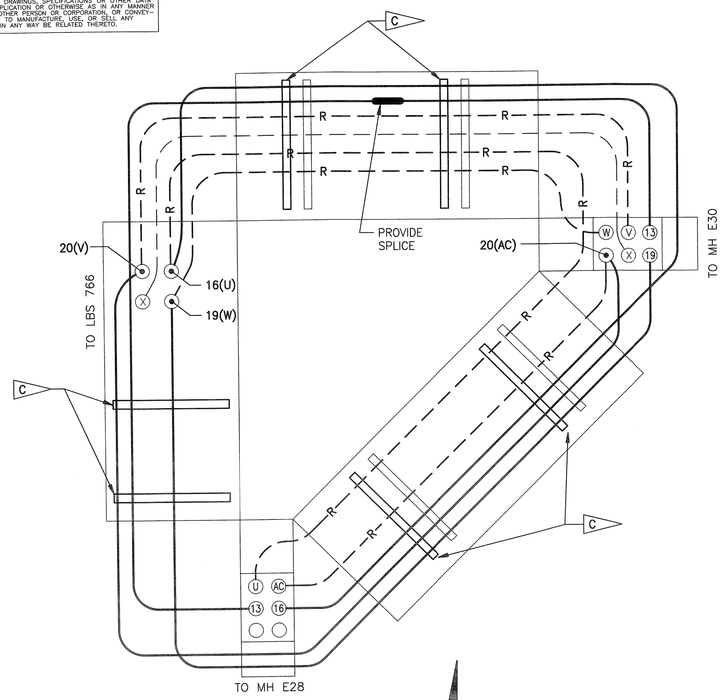

DETAIL MH E29 (AE / E8)
NOT TO SCALE
D

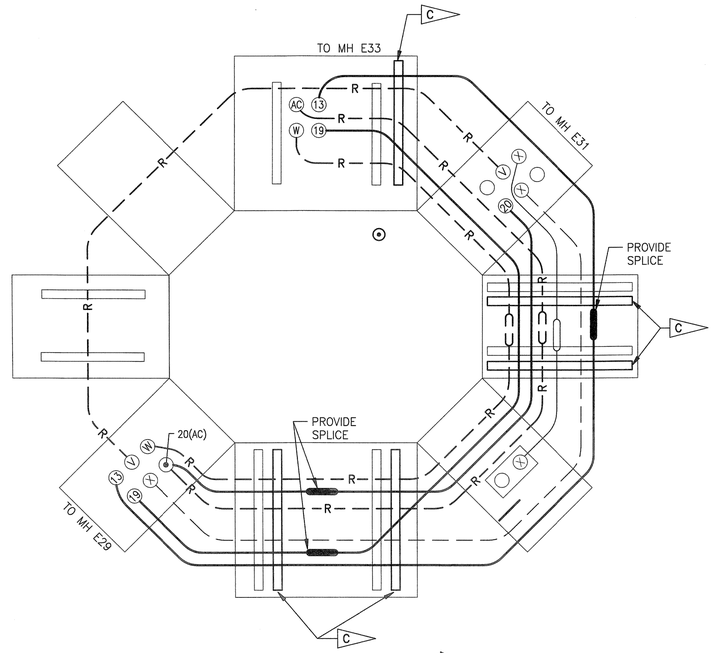

DETAIL MH E30 (AF / E8)
NOT TO SCALE
D

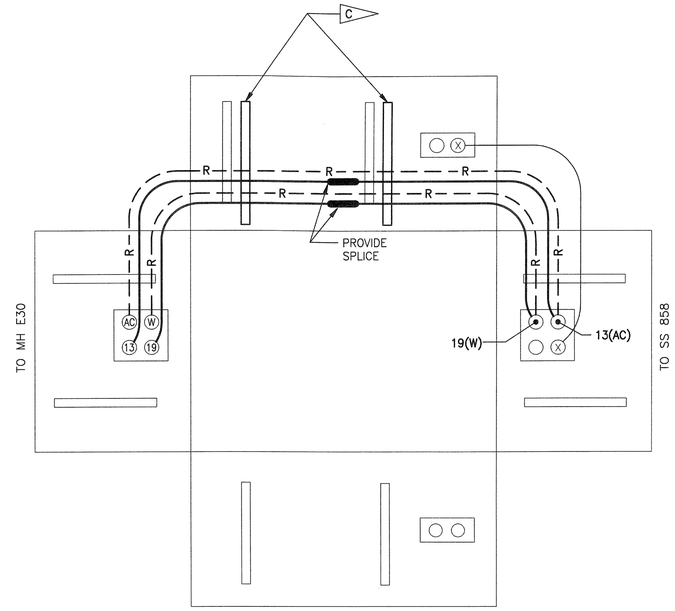

DETAIL MH E33 (AG / E8)
NOT TO SCALE
D

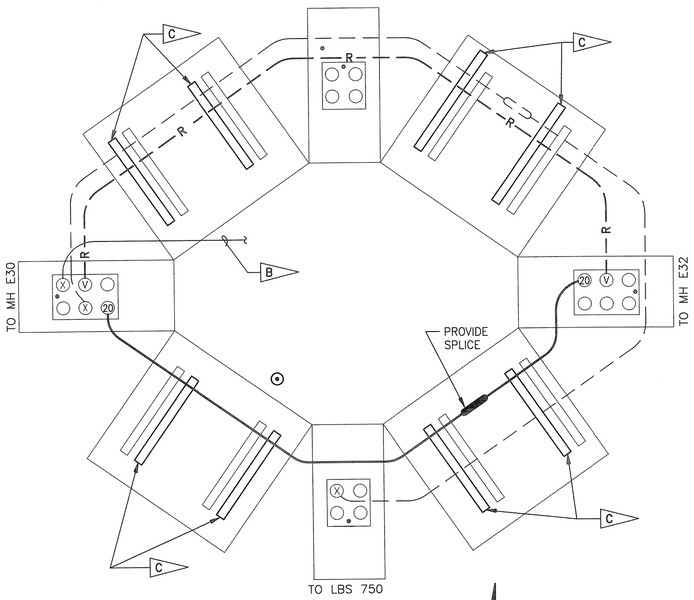

DETAIL MH E31 (AH / E8)
NOT TO SCALE
D

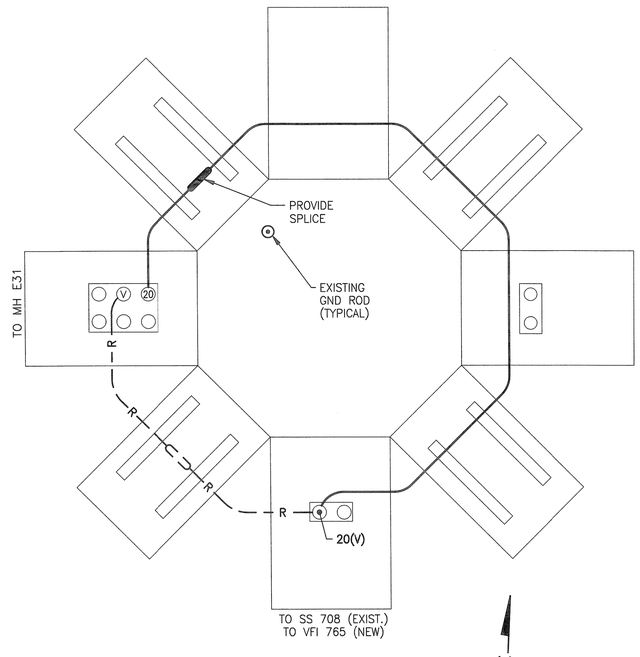

DETAIL MH E32 (AJ / E8)
NOT TO SCALE
D

SPECIFIC NOTES

A. FOR GENERAL NOTES AND LEGEND, SEE DRAWING V2.

B. CUT CABLE BACK SO THAT ONLY 305MM OF CABLE EXTEND INTO MANHOLE.

C. PROVIDE CABLE RACK AND RACK ARM(S). SEE DETAIL BN/E16.

D. PROVIDE CABLE TAGS ON ALL NEW CABLES. SEE CIRCUIT IDENTIFICATION TAG DETAIL A/V2.

SYM.	ZONE	DESCRIPTION	DATE	APPROVED

REVISIONS

ENGINEER OF RECORD: W. WILSON — PE License No. 22283

Fred Wilson & Associates, Inc. Consulting Engineers
C.A. NO. 7188 • 904-398-8636
3970 Hendricks Avenue • Jacksonville, FL 32207

SIGNATURES		DATE
DESIGNED	V. KELEMEN	4/09
DRAWN	V. KELEMEN	4/09
CHECKED	H. OBERN	6/09
SUBMITTED	W. Wilson	9/25/09
APPROVED	[illegible]	9/25/09
APPROVED		
APPROVED		
APPROVED		
APPROVED		
APPROVED		

NATIONAL AERONAUTICS AND SPACE ADMINISTRATION
JOHN F. KENNEDY SPACE CENTER, NASA
KENNEDY SPACE CENTER, FLORIDA

REPLACE FEEDERS AND DUCTS VAB AREA NORTH

MANHOLE LAYOUTS SHEET 6

FILE NO.	SIZE	DWG. NO.	
	F	79K38608	–
PROJ. NO. 98778		SHEET 16	

A/E FILE No. 0601\0601-25\0601-25.1
FILE: MHDET6.DWG
THIS DRAWING PREPARED BY AutoCAD 2008

E14

NOTICE – WHEN GOVERNMENT DRAWINGS, SPECIFICATIONS, OR OTHER DATA ARE USED FOR ANY PURPOSE OTHER THAN IN CONNECTION WITH A DEFINITELY RELATED GOVERNMENT PROCUREMENT OPERATION, THE UNITED STATES GOVERNMENT THEREBY INCURS NO RESPONSIBILITY NOR ANY OBLIGATION WHATSOEVER; AND THE FACT THAT THE GOVERNMENT MAY HAVE FORMULATED, FURNISHED, OR IN ANY WAY SUPPLIED THE SAID DRAWINGS, SPECIFICATIONS, OR OTHER DATA IS NOT TO BE REGARDED BY IMPLICATION OR OTHERWISE AS IN ANY MANNER LICENSING THE HOLDER OR ANY OTHER PERSON OR CORPORATION, OR CONVEYING ANY RIGHTS OR PERMISSION TO MANUFACTURE, USE, OR SELL ANY PATENTED INVENTION THAT MAY IN ANY WAY BE RELATED THERETO.

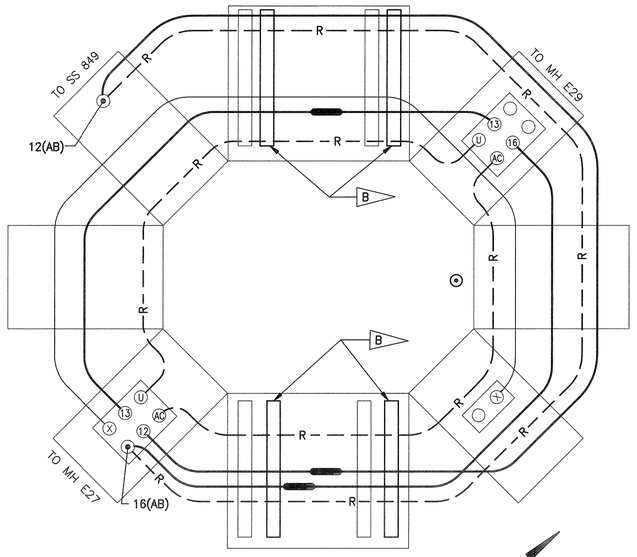

DETAIL MH E28 — NOT TO SCALE — D — AK / E7

SPECIFIC NOTES

A. FOR GENERAL NOTES AND LEGEND, SEE DRAWING V2.

B. PROVIDE CABLE RACK AND RACK ARM(S). SEE DETAIL BN/E16.

C. DUCT CONFIGUATION CHANGES BETWEEN MH E5B AND MH E27. CONTRACTOR TO VERIFY CABLE COMING INTO MH E27 AND MARK ANY CHANGES ON THE AS-BUILT RECORD DRAWINGS.

D. PROVIDE CABLE TAGS ON ALL NEW CABLES. SEE CIRCUIT IDENTIFICATION TAG DETAIL A/V2.

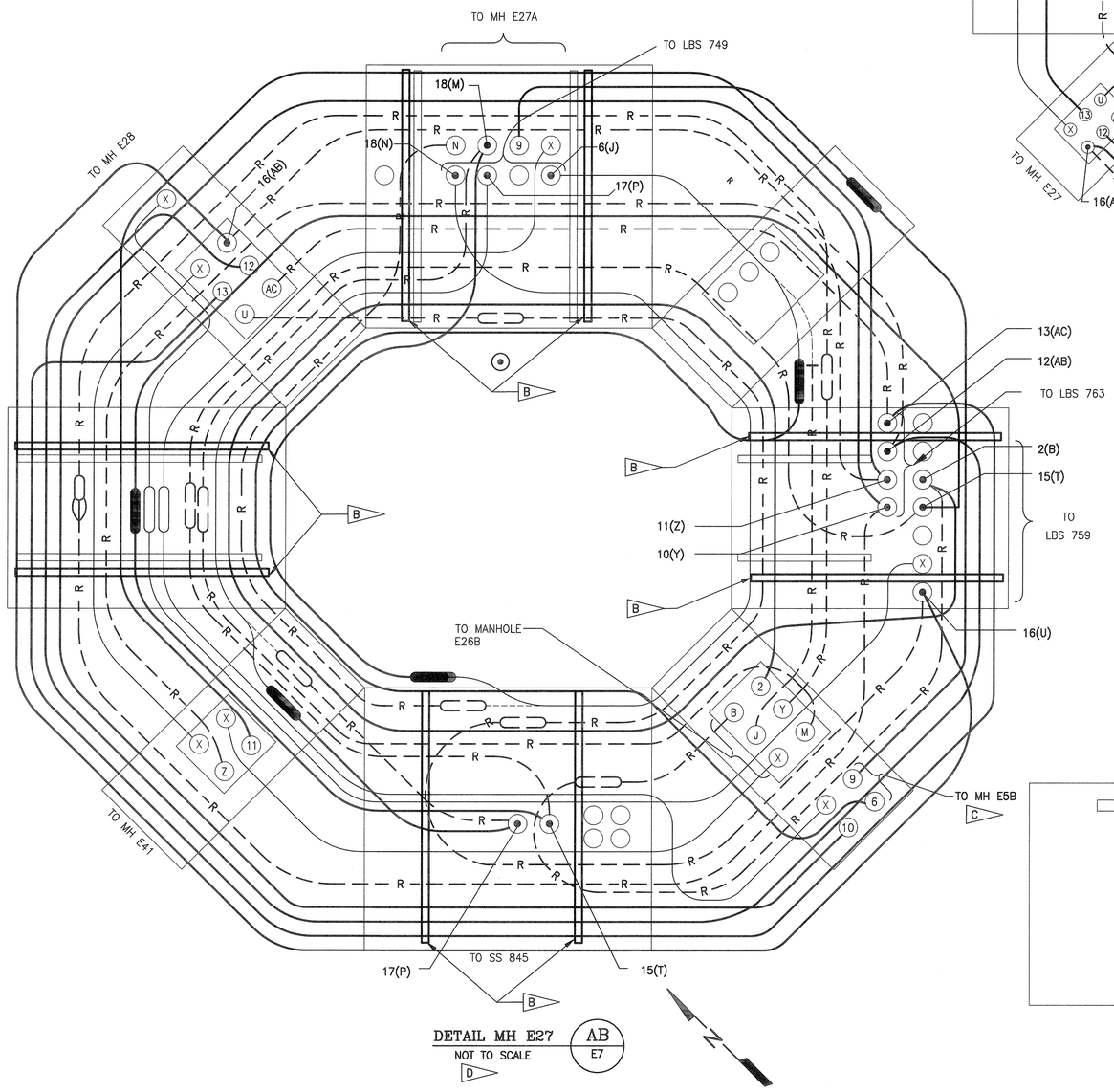

DETAIL MH E27 — NOT TO SCALE — D — AB / E7

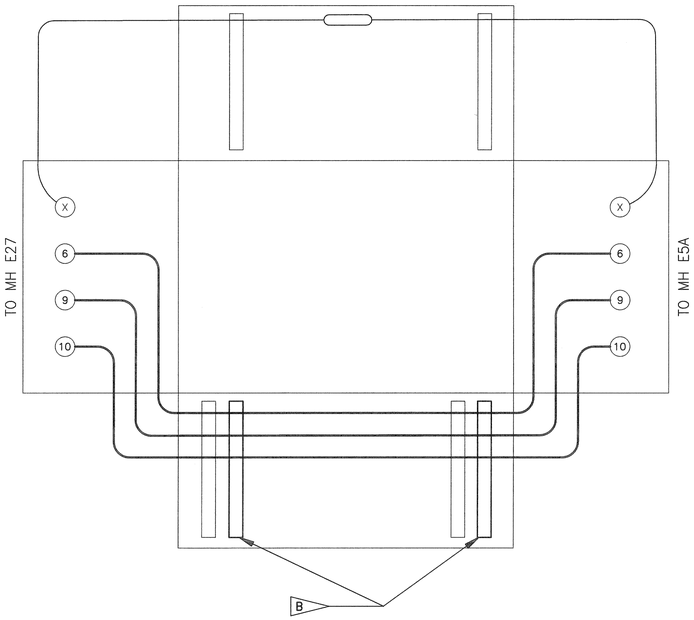

DETAIL MH E5B — NOT TO SCALE — D — AU / E7

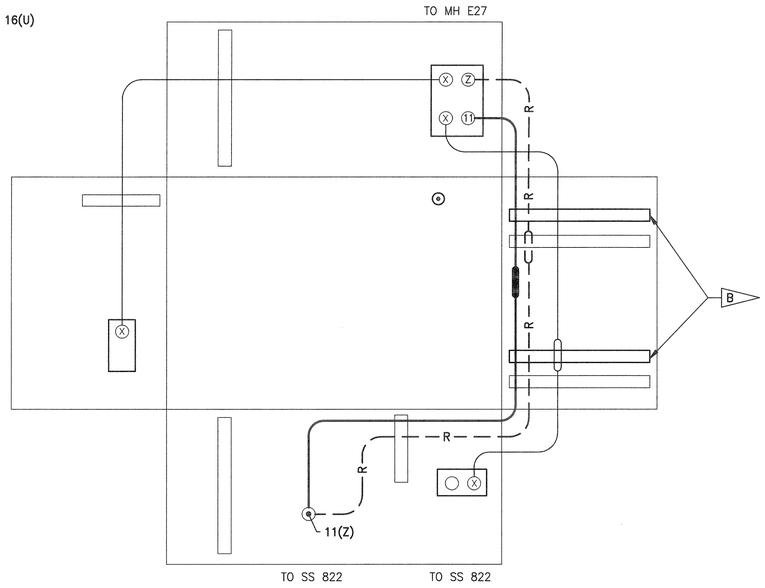

DETAIL MH E41 — NOT TO SCALE — D — AL / E7

SYM.	ZONE	DESCRIPTION	DATE	APPROVED
		REVISIONS		

ENGINEER OF RECORD: W. WILSON — PE License No. 22283

Fred Wilson & Associates, Inc. — Consulting Engineers — C.A. NO. 7188 • 904-398-8434 — 3970 Hendricks Avenue • Jacksonville, FL 32207

SIGNATURES		DATE
DESIGNED	V. KELEMEN	4/09
DRAWN	V. KELEMEN	4/09
CHECKED	H. OBERN	6/09
SUBMITTED	W. Wilson	9/25/09
APPROVED	[illegible]	9/25/09
APPROVED		
APPROVED		
APPROVED		
APPROVED		
APPROVED		

NATIONAL AERONAUTICS AND SPACE ADMINISTRATION
JOHN F. KENNEDY SPACE CENTER, NASA
KENNEDY SPACE CENTER, FLORIDA

REPLACE FEEDERS AND DUCTS VAB AREA NORTH

MANHOLE LAYOUTS SHEET 7

FILE NO. | SIZE F | DWG. NO. 79K38608 | –

PROJ. NO. 98778 | SHEET 17

A/E FILE No. 0601\0601-25\0601-25.1
FILE: MHDET7.DWG
THIS DRAWING PREPARED BY AutoCAD 2008

E15

KSC FORM 1-11A (REV 6/91) (C/G 12/93) — 09/25/2009 — F:\ELECT\0601\0601-25\0601-25.1\MHDET7

NOTICE – WHEN GOVERNMENT DRAWINGS, SPECIFICATIONS, OR OTHER DATA ARE USED FOR ANY PURPOSE OTHER THAN IN CONNECTION WITH A DEFINITELY RELATED GOVERNMENT PROCUREMENT OPERATION, THE UNITED STATES GOVERNMENT THEREBY INCURS NO RESPONSIBILITY NOR ANY OBLIGATION WHATSOEVER; AND THE FACT THAT THE GOVERNMENT MAY HAVE FORMULATED, FURNISHED, OR IN ANY WAY SUPPLIED THE SAID DRAWINGS, SPECIFICATIONS OR OTHER DATA IS NOT TO BE REGARDED BY IMPLICATION OR OTHERWISE IN ANY MANNER LICENSING THE HOLDER OR ANY OTHER PERSON OR CORPORATION, OR CONVEYING ANY RIGHTS OR PERMISSION TO MANUFACTURE, USE, OR SELL ANY PATENTED INVENTION THAT MAY IN ANY WAY BE RELATED THERETO.

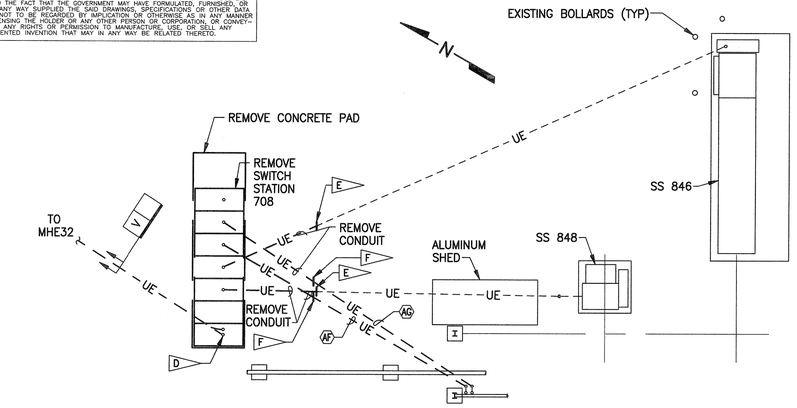

PARTIAL SITE PLAN – EXISTING

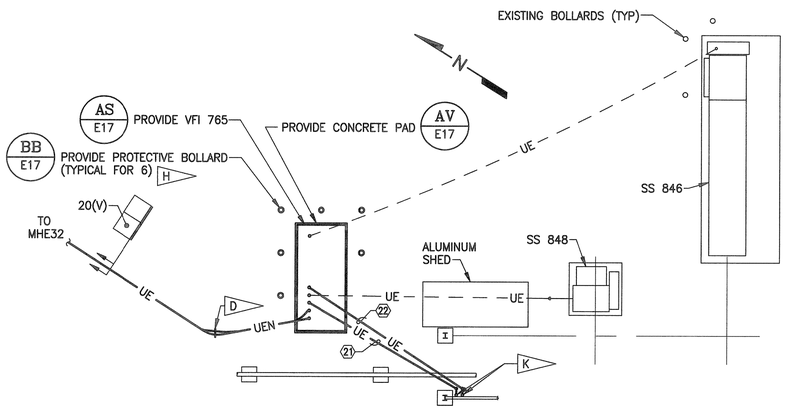

PARTIAL SITE PLAN – MODIFIED

SS 708 & VFI 765 DETAIL – ENLARGED PLAN (AM / E8)

SCALE: 1:100

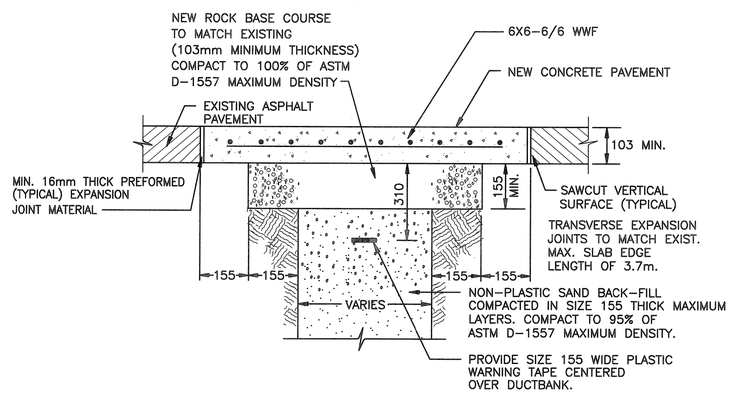

TYPICAL PORTLAND CEMENT CONCRETE PAVEMENT REPAIR (BF / E18)

NOT TO SCALE

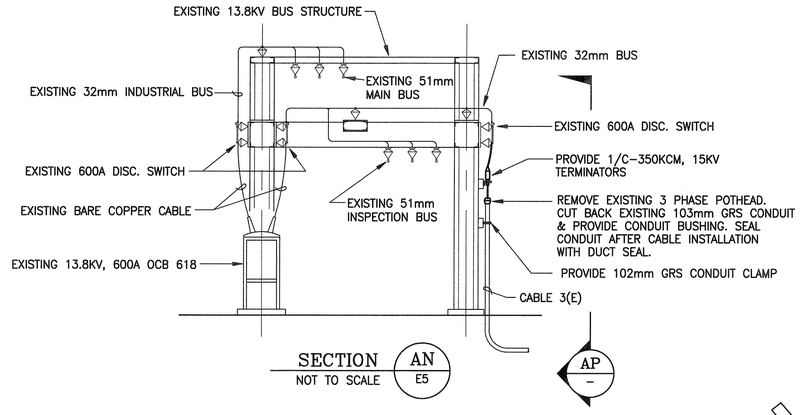

SECTION (AN / E5)

NOT TO SCALE

AP / –

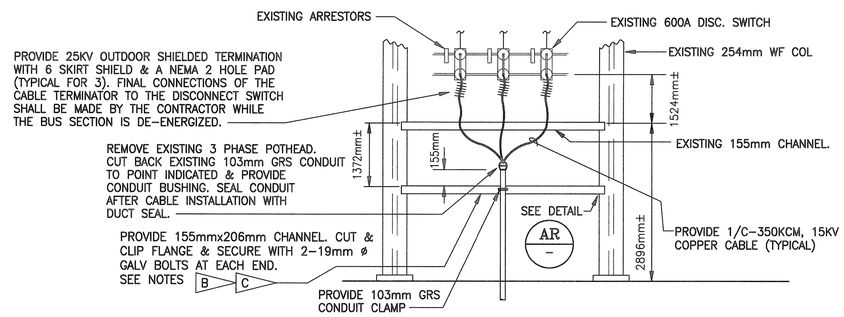

ELEVATION (AP / –)

NOT TO SCALE

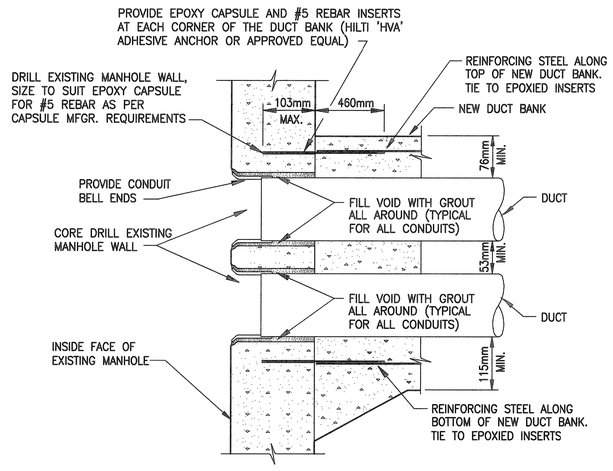

TYPICAL DUCT ENTRANCE TO EXISTING MANHOLE DETAIL (AT / E9, E10, E11, E19)

NOT TO SCALE

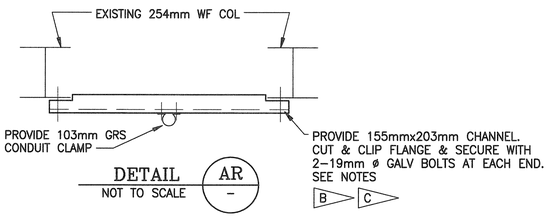

DETAIL (AR / –)

NOT TO SCALE

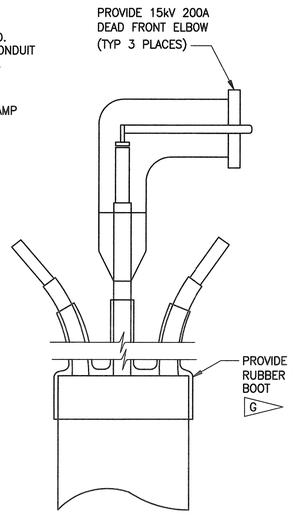

ELBOW DETAIL (BM / E4)

NOT TO SCALE

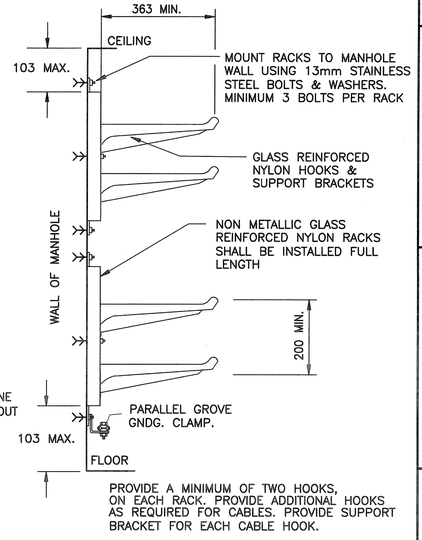

CABLE RACK INSTALLATION IN MANHOLES (BN / E9, E10, E11, E12, E13, E14, E15, E18, E19)

NOT TO SCALE

SPECIFIC NOTES:

A. FOR GENERAL NOTES AND LEGEND, SEE DRAWING V2.

B. 19mm ø AND 13mm ø BOLTS SHALL BE GALVANIZED, HIGH STRENGTH, FABRICATED PER ASTM A-325.

C. CHANNEL AND ANGLE INCLUDING PLATES, WASHERS, NUTS, BOLTS & OTHER ACCESSORIES SHALL BE GALVANIZED BY THE HOT DIP PROCESS AFTER FABRICATION, PER ASTM A-386.

D. REMOVE CABLE V AND CUT BACK CONDUIT RISERS UP TO AND INCLUDING ELBOWS. EXTEND EXISTING CONDUITS WITH 2-103mm SCH 80 PVC DB CONDUITS TO NEW VFI 765 LOCATION.

E. PULL BACK CABLES AND INTERCEPT EXISTING CONDUITS. EXTEND CONDUITS WITH 103mm SCH 80 PVC DB CONDUITS TO NEW VFI 765 LOCATION, CONNECT EXISTING CABLES TO VFI 765.

F. REMOVE CABLES AF AND AG AND INTERCEPT EXISTING CONDUITS. EXTEND CONDUITS WITH 103mm SCH 80 PVC DB CONDUITS TO NEW VFI 765 LOCATION.

G. PROVIDE SILICONE RUBBER BREAKOUT BOOT FOR AMERICAN MUSTANG, 15kV, 3C #2/0 TYPE SHD-GC CABLE.

H. INSTALL & LOCATE BOLLARDS SO AS TO ALLOW CLEARANCE OF DOOR OPENING OF AT LEAST 130'.

J. FOR CABLE SCHEDULE, SEE DRAWINGS E2 AND E4.

K. CONTRACTOR TO ADD AN ADDITIONAL 30' TO THE LENGTH OF MINING CABLE THAT PRESENTLY EXISTS ON THE PLATFORM AT THE MLP PARKSITE. USE 125' FOR BIDDING PURPOSES FOR CABLES 21 AND 22.

GRAPHIC SCALE

1:100 — 0 5 10 m

SYM.	ZONE	DESCRIPTION	DATE	APPROVED
		REVISIONS		

ENGINEER OF RECORD: W. WILSON — PE License No. 22283

Fred Wilson & Associates, Inc. Consulting Engineers
C.A. NO. 7188 • 904-398-8636
3970 Hendricks Avenue • Jacksonville, FL 32207

SIGNATURES		DATE
DESIGNED	V. KELEMEN	4/09
DRAWN	V. KELEMEN	4/09
CHECKED	H. OBERN	6/09
SUBMITTED		9/25/09
APPROVED		9/25/09
APPROVED		
APPROVED		
APPROVED		
APPROVED		
APPROVED		

NATIONAL AERONAUTICS AND SPACE ADMINISTRATION
JOHN F. KENNEDY SPACE CENTER, NASA
KENNEDY SPACE CENTER, FLORIDA

REPLACE FEEDERS AND DUCTS
VAB AREA NORTH

MISCELLANEOUS DETAILS
SHEET 1

A/E FILE No. 0601\0601-25\0601-25.1
FILE: MISC-DET1.DWG
THIS DRAWING PREPARED BY AutoCAD 2008

E16

FILE NO. | SIZE F | DWG. NO. 79K38608 | –

PROJ. NO. 98778 | SHEET 18

NOTICE — WHEN GOVERNMENT DRAWINGS, SPECIFICATIONS, OR OTHER DATA ARE USED FOR ANY PURPOSE OTHER THAN IN CONNECTION WITH A DEFINITELY RELATED GOVERNMENT PROCUREMENT OPERATION, THE UNITED STATES GOVERNMENT THEREBY INCURS NO RESPONSIBILITY NOR ANY OBLIGATION WHATSOEVER; AND THE FACT THAT THE GOVERNMENT MAY HAVE FORMULATED, FURNISHED, OR IN ANY WAY SUPPLIED THE SAID DRAWINGS, SPECIFICATIONS OR OTHER DATA IS NOT TO BE REGARDED BY IMPLICATION OR OTHERWISE IN ANY MANNER LICENSING THE HOLDER OR ANY OTHER PERSON OR CORPORATION, OR CONVEYING ANY RIGHTS OR PERMISSION TO MANUFACTURE, USE, OR SELL ANY PATENTED INVENTION THAT MAY IN ANY WAY BE RELATED THERETO.

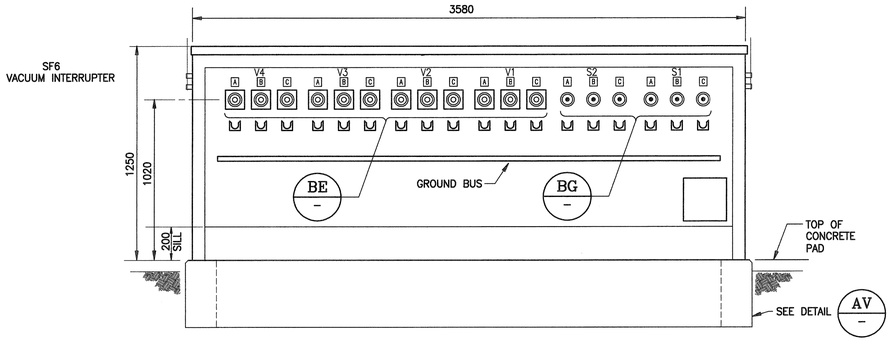

REAR ELEVATION
4 INTERRUPTERS & 2 SWITCHES
(DOORS NOT SHOWN FOR CLARITY)

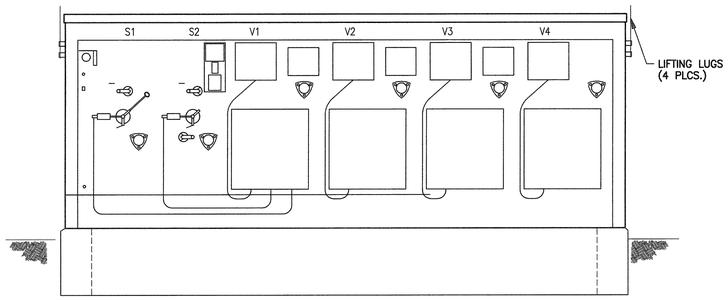

FRONT ELEVATION
(DOORS NOT SHOWN FOR CLARITY)

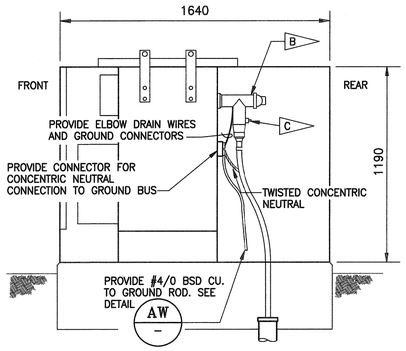

SIDE ELEVATION
(SIDE PANEL NOT SHOWN FOR CLARITY)

15KV PAD MOUNTED SWITCH VFI 765 WITH VACUUM INTERRUPTERS (AS / E16)

NOT TO SCALE

NOTE: DIMENSIONS MAY VARY WITH MANUFACTURER. VERIFY WITH FURNISHED EQUIPMENT.

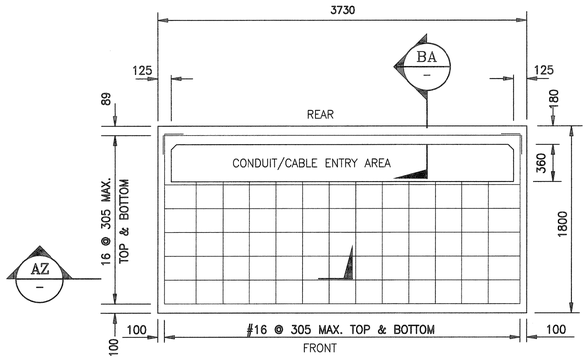

PLAN
NOT TO SCALE

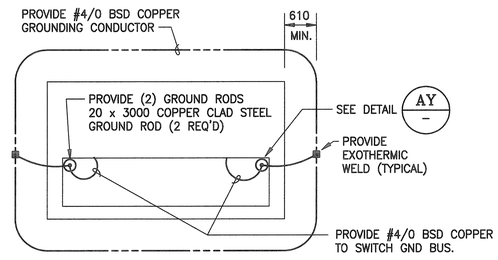

SWITCH GROUNDING DETAIL (AW)
NOT TO SCALE

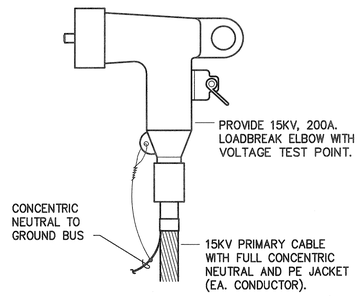

15KV, 200A. LOADBREAK ELBOW DETAIL
NOT TO SCALE
BE

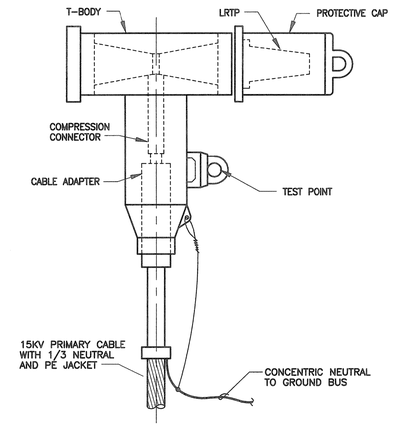

15KV, 600A. TERMINATOR ASSEMBLY (BG)
NOT TO SCALE

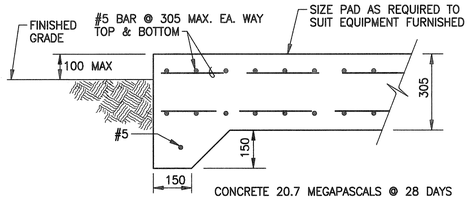

SECTION (AZ)
NOT TO SCALE

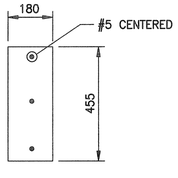

SECTION (BA)
NOT TO SCALE

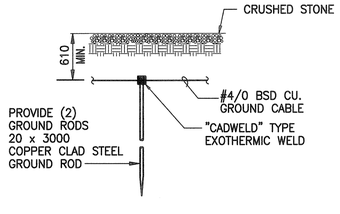

GROUND ROD DETAIL (AY)
NOT TO SCALE

CONCRETE PAD DETAIL FOR
15KV PAD MOUNTED SWITCH VFI 765 (AV / E16 E17)
NOT TO SCALE

NOTE: SIZE PAD TO FIT FURNISHED EQUIPMENT.

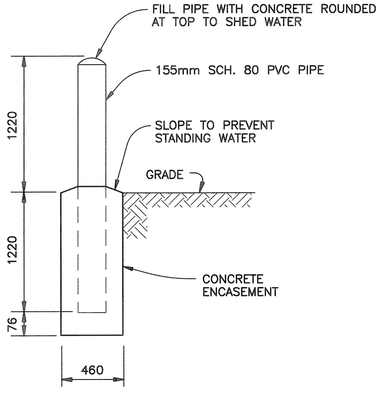

PROTECTIVE PIPE BUMPER (BB / E16)
NOT TO SCALE

SPECIFIC NOTES:

A. FOR GENERAL NOTES AND LEGEND SEE DWG. V2.

B. 600 AMP 15KV BOLTED ELBOW WITH CAPACITIVE TEST POINT AND PROTECTIVE CAP. FOR SWITCHED WAYS ONLY. SEE DETAIL BG/THIS SHEET.

C. HOT LINE VOLTAGE INDICATOR ON TEST POINT OF 600A LOAD BREAK ELBOW.

A/E FILE No. 0601\0601-25\0601-25.1
FILE: MISC-DET2.DWG
THIS DRAWING PREPARED BY AutoCAD 2008

E17

SYM.	ZONE	DESCRIPTION	DATE	APPROVED
		REVISIONS		

ENGINEER OF RECORD: W. WILSON — PE License No. 22283

Fred Wilson & Associates, Inc.
Consulting Engineers
C.A. NO. 7188 • 904/398-8636
3970 Hendricks Avenue • Jacksonville, FL 32207

SIGNATURES		DATE
DESIGNED	V. KELEMEN	4/09
DRAWN	V. KELEMEN	4/09
CHECKED	H. OBERN	6/09
SUBMITTED	V. Kelemen	9/25/09
APPROVED	[illegible]	9/27/09
APPROVED		
APPROVED		
APPROVED		
APPROVED		
APPROVED		

NATIONAL AERONAUTICS AND SPACE ADMINISTRATION
JOHN F. KENNEDY SPACE CENTER, NASA
KENNEDY SPACE CENTER, FLORIDA

REPLACE FEEDERS AND DUCTS
VAB AREA NORTH

MISCELLANEOUS DETAILS
SHEET 2

FILE NO. | SIZE F | DWG. NO. 79K38608 | —
PROJ. NO. 98778 | SHEET 19

NOTICE – WHEN GOVERNMENT DRAWINGS, SPECIFICATIONS, OR OTHER DATA ARE USED FOR ANY PURPOSE OTHER THAN IN CONNECTION WITH A DEFINITELY RELATED GOVERNMENT PROCUREMENT OPERATION, THE UNITED STATES GOVERNMENT THEREBY INCURS NO RESPONSIBILITY NOR ANY OBLIGATION WHATSOEVER, AND THE FACT THAT THE GOVERNMENT MAY HAVE FORMULATED, FURNISHED, OR IN ANY WAY SUPPLIED THE SAID DRAWINGS, SPECIFICATIONS, OR OTHER DATA IS NOT TO BE REGARDED BY IMPLICATION OR OTHERWISE AS IN ANY MANNER LICENSING THE HOLDER OR ANY OTHER PERSON OR CORPORATION, OR CONVEYING ANY RIGHTS OR PERMISSION TO MANUFACTURE, USE, OR SELL ANY PATENTED INVENTION THAT MAY IN ANY WAY BE RELATED THERETO.

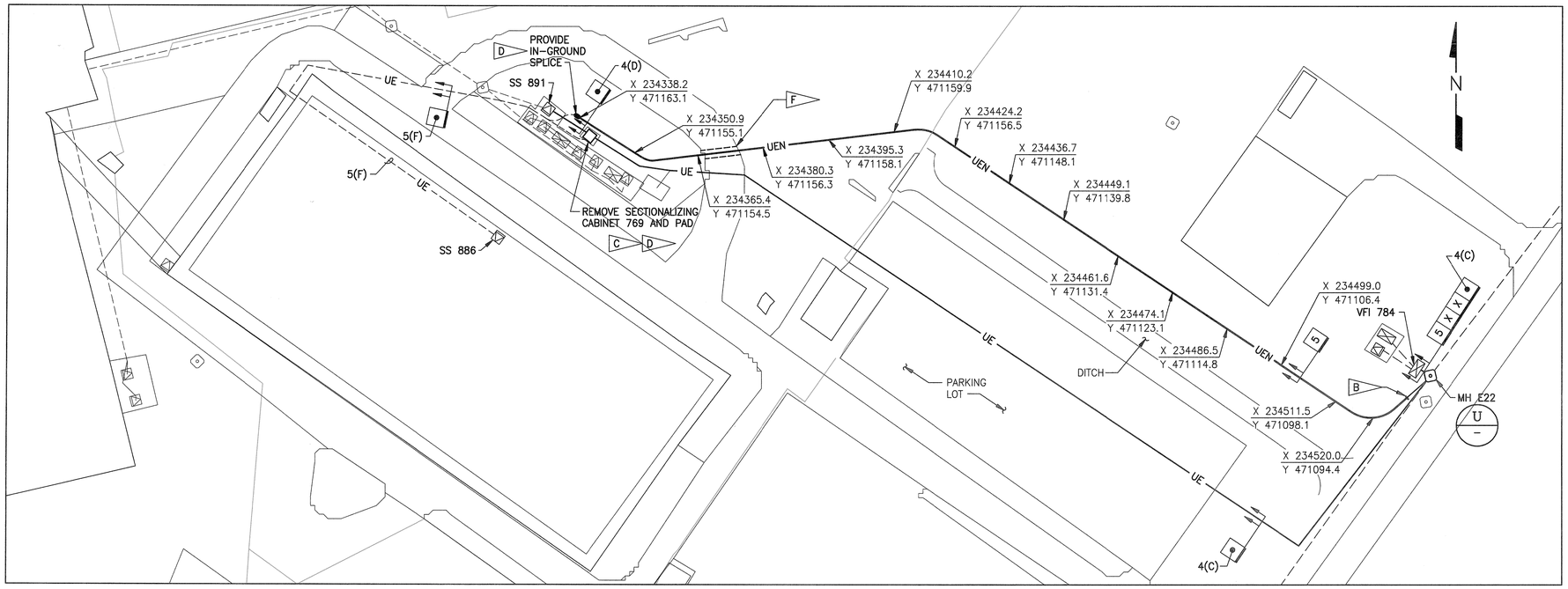

SITE PLAN – AREA 4

SCALE: 1:500

SPECIFIC NOTES:

A. FOR GENERAL NOTES AND LEGEND, SEE DRAWING V2.

B. PROVIDE 103mm SCHEDULE 40 PVC CONDUIT AND INTERCEPT EXISTING SPARE CONDUIT STUBBED OUT AT MH E22.

C. REMOVE SECTIONALIZING CABINET 769 AND CONCRETE PAD. REMOVE CONDUIT ELBOWS, STUBBED UP CONDUITS AND ELBOW CONNECTIONS AT SECTIONALIZING CABINET 769. CONTRACTOR TO USE CAUTION NOT TO DAMAGE CABLE "F" DURING CONDUIT REMOVAL.

D. PROVIDE IN-GROUND SPLICE TO CONNECT CABLES "5" AND "F". PROVIDE ELECTRONIC BALL MARKER ABOVE SPLICE. CONNECT CONDUIT THAT CONTAINED CABLE "C" TO CONDUIT THAT CONTAINED CABLE "D" AT CABINET 769. ROUTE CABLE "4" THROUGH THEM. SEE DETAIL BD/THIS SHEET.

E. PROVIDE CABLE RACK AND ARM(S), SEE DETAIL BN/E16.

F. SAW CUT EXISTING DRIVE. PATCH PER DETAIL BF/E16.

G. CONNECT CONCENTRIC NEUTRAL TO 4/0 BARE CU. COUNTERPOISE AT EACH SPLICE.

H. CONNECT COUNTERPOISE TO GROUND ROD WITH EXOTHERMIC WELDS.

J. PROVIDE CABLE TAGS ON ALL NEW CABLES. SEE CIRCUIT IDENTIFICATION TAG DETAIL A/V2.

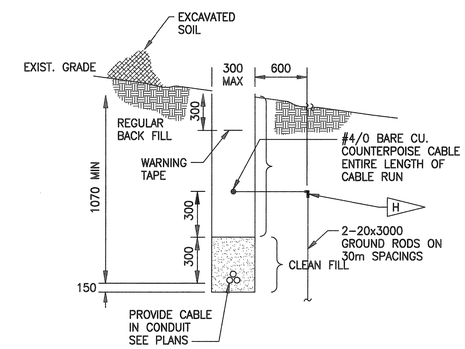

DIRECT BURIED CABLE TRENCH DETAIL

NOT TO SCALE

BA –

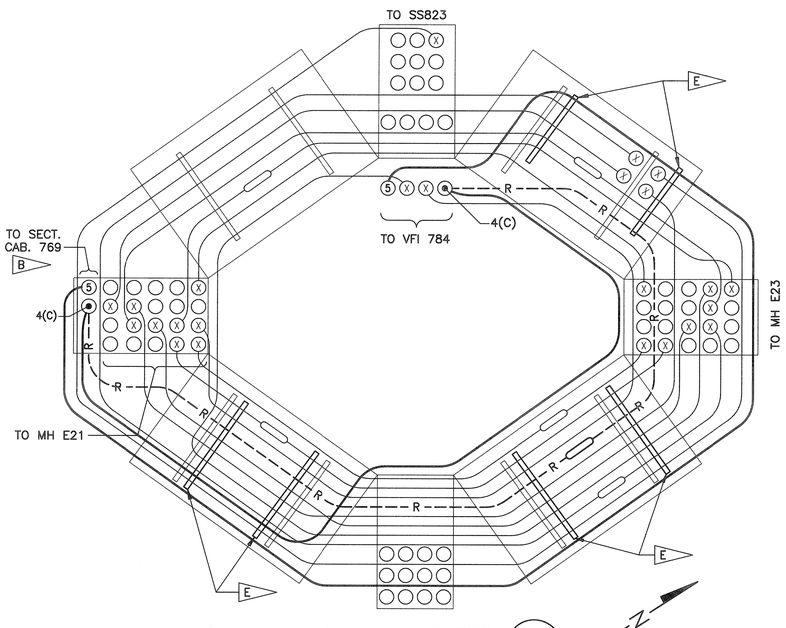

DETAIL MH E22

NOT TO SCALE

U –

J

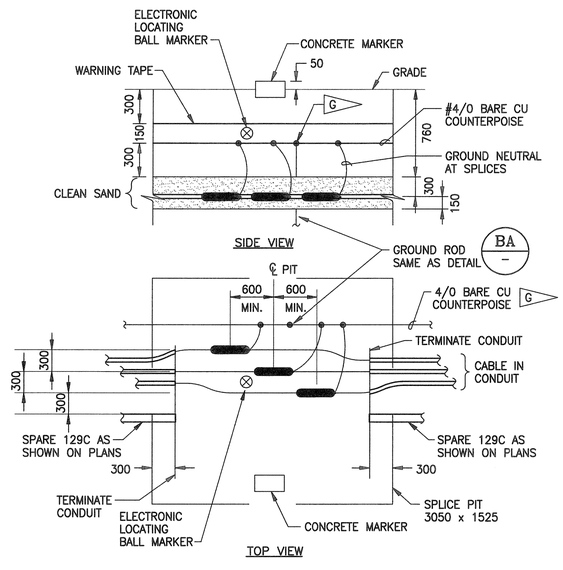

TYPICAL SPLICE PIT FOR DIRECT BURIED CABLE

NOT TO SCALE

BD –

GRAPHIC SCALE

1:500 — 0 5 10 20 30 40 50m

SYM.	ZONE	DESCRIPTION	DATE	APPROVED
		REVISIONS		

ENGINEER OF RECORD: W. WILSON — PE License No. 22283

Fred Wilson & Associates, Inc. Consulting Engineers
C.A. NO. 7188 • 904-398-8636
3970 Hendricks Avenue • Jacksonville, FL 32207

SIGNATURES		DATE
DESIGNED	V. KELEMEN	4/09
DRAWN	V. KELEMEN	4/09
CHECKED	H. OBERN	6/09
SUBMITTED	W Wilson	9/25/09
APPROVED	[illegible]	9/25/09
APPROVED		
APPROVED		
APPROVED		
APPROVED		
APPROVED		

NATIONAL AERONAUTICS AND SPACE ADMINISTRATION
JOHN F. KENNEDY SPACE CENTER, NASA
KENNEDY SPACE CENTER, FLORIDA

REPLACE FEEDERS AND DUCTS
VAB AREA NORTH

SITE PLAN
AREA 4

FILE NO. | SIZE F | DWG. NO. 79K38608 | –

PROJ. NO. 98778 | SHEET 20

A/E FILE No. 0601\0601-25\0601-25.1
FILE: AREA04.DWG
THIS DRAWING PREPARED BY AutoCAD 2008

E18

NOTICE – WHEN GOVERNMENT DRAWINGS, SPECIFICATIONS, OR OTHER DATA ARE USED FOR ANY PURPOSE OTHER THAN IN CONNECTION WITH A DEFINITELY RELATED GOVERNMENT PROCUREMENT OPERATION, THE UNITED STATES GOVERNMENT THEREBY INCURS NO RESPONSIBILITY NOR ANY OBLIGATION WHATSOEVER; AND THE FACT THAT THE GOVERNMENT MAY HAVE FORMULATED, FURNISHED, OR IN ANY WAY SUPPLIED THE SAID DRAWINGS, SPECIFICATIONS, OR OTHER DATA IS NOT TO BE REGARDED BY IMPLICATION OR OTHERWISE AS IN ANY MANNER LICENSING THE HOLDER OR ANY OTHER PERSON OR CORPORATION, OR CONVEYING ANY RIGHTS OR PERMISSION TO MANUFACTURE, USE, OR SELL ANY PATENTED INVENTION THAT MAY IN ANY WAY BE RELATED THERETO.

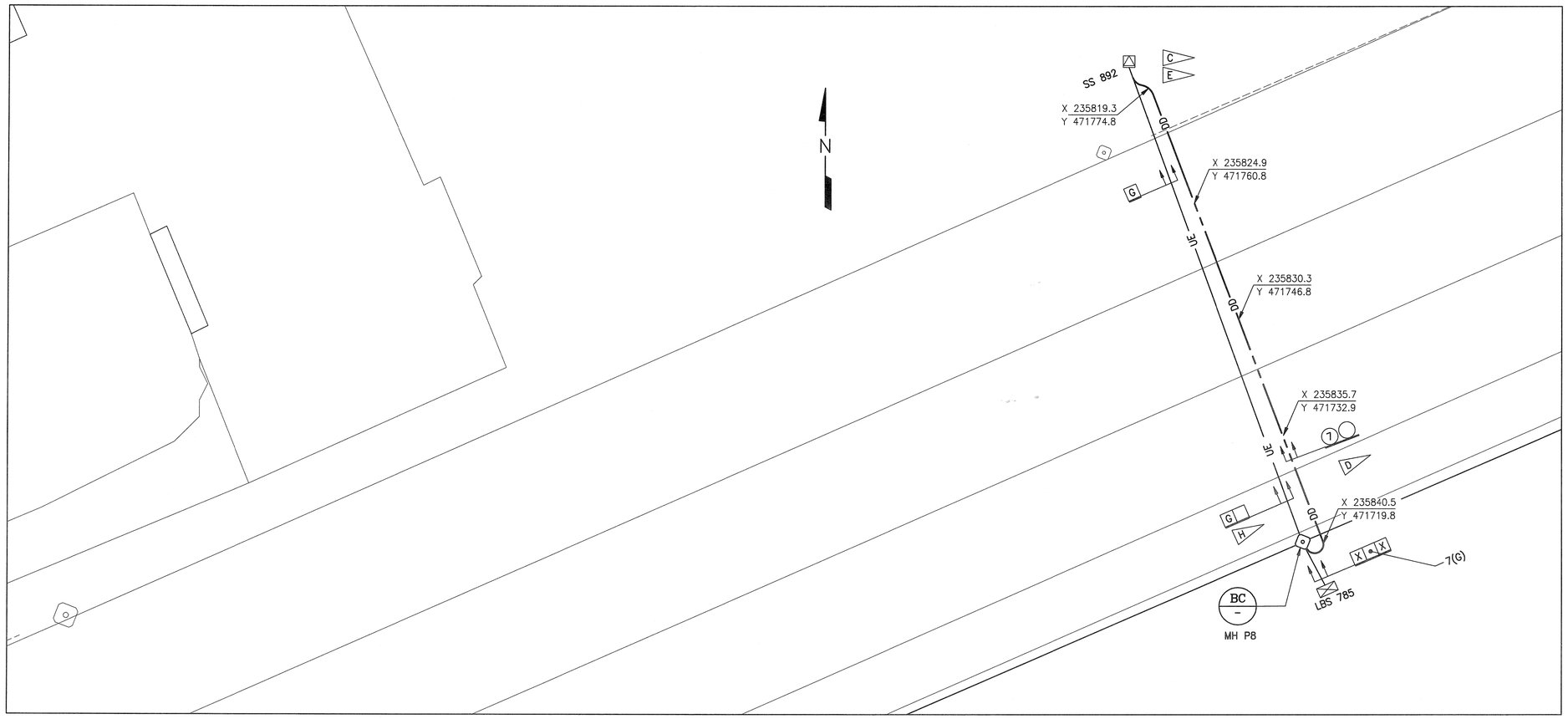

SITE PLAN AREA 5

SCALE: 1:250

SPECIFIC NOTES:

A. FOR GENERAL NOTES AND LEGEND, SEE DRAWING V2.

B. PROVIDE CABLE RACK AND RACK ARM(S), SEE DETAIL BN/E16.

C. CONTRACTOR TO INTERCEPT EXISTING SIZE 103 PVC CONDUIT. PROVIDE SIZE 127 (HDPE) TO SIZE 103 PVC REDUCING COUPLING. TIE NEW SIZE 127 HDPE CONDUIT TO EXISTING SIZE 103 PVC CONDUIT.

D. CONTRACTOR TO MAINTAIN A MINIMUM DEPTH OF 3m BELOW THE BOTTOM LAYER OF CRAWLERWAY MATERIAL WHEN DIRECTIONAL DRILLING.

E. CONTRACTOR TO CAP SPARE CONDUIT 3m SOUTHEAST OF SS 892. PROVIDE BALL MARKER FOR LOCATING SPARE IN THE FUTURE.

F. CORE DRILL 2 HOLES FOR SIZE 127 DIRECTIONAL DRILLED DUCT. SEE DETAIL AT/E16.

G. PROVIDE CABLE TAGS ON ALL NEW CABLES. SEE CIRCUIT IDENTIFICATION TAG DETAIL A/V2.

H. CONTRACTOR SHOULD ANTICIPATE ORANGEBURG DUCT WHEN REMOVING CABLE.

GRAPHIC SCALE

1:250 — 5 0 5 10 15 20 m

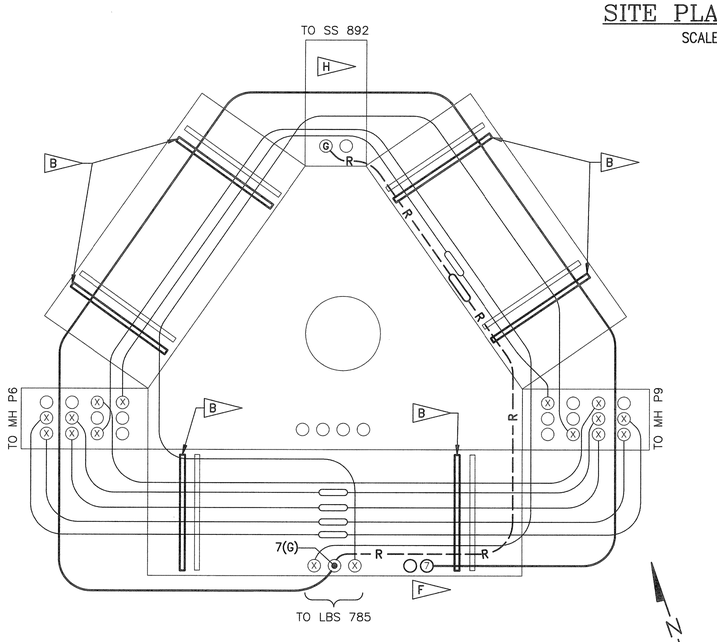

DETAIL MH P8

NOT TO SCALE

BC
–

G

SYM.	ZONE	DESCRIPTION	DATE	APPROVED
		REVISIONS		

ENGINEER OF RECORD: W. WILSON — PE License No. 22283

Fred Wilson & Associates, Inc.
Consulting Engineers
C.A. NO. 7188 • 904-398-8636
3970 Hendricks Avenue • Jacksonville, FL 32207

SIGNATURES		DATE
DESIGNED	V. KELEMEN	4/09
DRAWN	V. KELEMEN	4/09
CHECKED	H. OBERN	6/09
SUBMITTED	W. Wilson	9/25/09
APPROVED	[illegible]	9/25/09
APPROVED		
APPROVED		
APPROVED		
APPROVED		
APPROVED		

NATIONAL AERONAUTICS AND SPACE ADMINISTRATION
JOHN F. KENNEDY SPACE CENTER, NASA
KENNEDY SPACE CENTER, FLORIDA

REPLACE FEEDERS AND DUCTS VAB AREA NORTH

SITE PLAN AREA 5

FILE NO.	SIZE	DWG. NO.	
	F	79K38608	–
PROJ. NO. 98778		SHEET 21 OF 21	

A/E FILE No. 0601\0601-25\0601-25.1
FILE: AREA05.DWG
THIS DRAWING PREPARED BY AutoCAD 2008

E19