NOTICE – WHEN GOVERNMENT DRAWINGS, SPECIFICATIONS, OR OTHER DATA ARE USED FOR ANY PURPOSE OTHER THAN IN CONNECTION WITH A DEFINITELY RELATED GOVERNMENT PROCUREMENT OPERATION, THE UNITED STATES GOVERNMENT THEREBY INCURS NO RESPONSIBILITY NOR ANY OBLIGATION WHATSOEVER; AND THE FACT THAT THE GOVERNMENT MAY HAVE FORMULATED, FURNISHED, OR IN ANY WAY SUPPLIED THE SAID DRAWINGS, SPECIFICATIONS, OR OTHER DATA, IS NOT TO BE REGARDED BY IMPLICATION OR OTHERWISE IN ANY MANNER LICENSING THE HOLDER OR ANY OTHER PERSON OR CORPORATION, OR CONVEYING ANY RIGHTS OR PERMISSION TO MANUFACTURE, USE, OR SELL ANY PATENTED INVENTION THAT MAY IN ANY WAY BE RELATED THERETO.

NATIONAL AERONAUTICS AND SPACE ADMINISTRATION
JOHN F. KENNEDY SPACE CENTER

REVITIALIZE KSC HIGH AND MEDIUM VOLTAGE ELECTRICAL DISTRIBUTION SYSTEMS

MODIFY C-5 SUBSTATION FOR RING BUS CONFIGURATION

PCN 98778

SHEET NO.	REV.	FUNCTION CODE	INDEX OF DRAWINGS
1	–	V1	VICINITY MAP, PROJECT LOCATION MAP AND INDEX OF DRAWINGS
2	–	C1	MODIFIED CIVIL SITE PLAN
3	–	E1	LEGEND & GENERAL NOTES
4	–	E2	EXISTING SITE PLAN C–5 SUBSTATION
5	–	E3	MODIFIED SITE PLAN C–5 SUBSTATION
6	–	E4	EXISTING AND MODIFIED 115KV SINGLE LINE DIAGRAM
7	–	E5	EXISTING 13.8KV SINGLE LINE DIAGRAM
8	–	E6	EXISTING 115KV BUS DIFFERENTIAL SINGLE LINE DIAGRAM
9	–	E7	MODIFIED 115KV BUS DIFFERENTIAL SINGLE LINE DIAGRAM
10	–	E8	EXISTING BUS DIFFERENTIAL CONNECTION DETAILS AND CABLE & CONDUIT SCHEDULE
11	–	E9	MODIFIED BUS DIFFERENTIAL CONNECTION DETAILS AND CABLE & CONDUIT SCHEDULE
12	–	E10	EXISTING 115KV BREAKERS TP8, TP9 & TP10 AND 15KV BREAKERS TS8, TS9 & TS10 A.C. SCHEMATIC DIAGRAMS
13	–	E11	MODIFIED 115KV BREAKERS TP8, TP9 AND TP10 – A.C. SCHEMATIC DIAGRAMS
14	–	E12	MODIFIED 15KV BREAKERS BREAKERS TS8, TS9 AND TS10 – A.C. SCHEMATIC DIAGRAMS
15	–	E13	115KV BREAKER TP8 – EXISTING D.C. SCHEMATIC DIAGRAM
16	–	E14	115KV BREAKER TP8 – MODIFIED D.C. SCHEMATIC DIAGRAM
17	–	E15	15KV BREAKER TS8 – EXISTING/MODIFIED D.C. SCHEMATIC DIAGRAM
18	–	E16	TRANSFORMER T8 – EXISTING/MODIFIED D.C. SCHEMATIC DIAGRAM
19	–	E17	115KV BREAKER TP9 – EXISTING/MODIFIED D.C. SCHEMATIC DIAGRAMS AND RELAY FUNCTION TABLE
20	–	E18	115KV BREAKER TP10 – EXISTING/MODIFIED D.C. SCHEMATIC DIAGRAMS
21	–	E19	13.8KV BREAKERS TS9 AND TS10 –EXISTING/MODIFIED D.C. SCHEMATIC DIAGRAMS
22	–	E20	TRANSFORMERS T9 AND T10 – EXISTING/MODIFIED D.C. SCHEMATIC DIAGRAM
23	–	E21	115KV BUS TIE BREAKERS HBT1 AND HBT2 – A.C. SCHEMATIC DIAGRAM
24	–	E22	115KV BUS TIE BREAKER HBT1 – D.C. SCHEMATIC DIAGRAM
25	–	E23	115KV BUS TIE BREAKER HBT2 – D.C. SCHEMATIC DIAGRAM
26	–	E24	115KV BREAKER FAILURE SYSTEM – D.C. SCHEMATIC DIAGRAMS
27	–	E25	EXISTING ELECTRICAL CONDUIT AND GROUNDING PLAN
28	–	E26	MODIFIED ELECTRICAL CONDUIT AND GROUNDING PLAN
29	–	E27	115KV BUS TIE BREAKERS HBT1 AND HBT2 – PLAN AND ELEVATIONS
30	–	E28	TRANSFORMER T8, BREAKERS TP8 AND TS8 EXISTING/MODIFIED CONTROL PANEL 5 ARRANGEMENT
31	–	E29	EXISTING CONTROL SWITCHBOARD 1F–4F FRONT ELEVATION
32	–	E30	MODIFIED CONTROL SWITCHBOARD 1F–4F FRONT ELEVATION
33	–	E31	LIST OF EQUIPMENT
34	–	E32	EXISTING AND MODIFIED A.C. AND D.C. PANEL SCHEDULES
35	–	E33	EXISTING COMMUNICATION SYSTEM BLOCK DIAGRAM
36	–	E34	MISCELLANEOUS AND SUGGESTED SEQUENCE OF CONSTRUCTION
37	–	E35	TRANSFORMERS T9 & T10 OUTLINE AND DETAILS

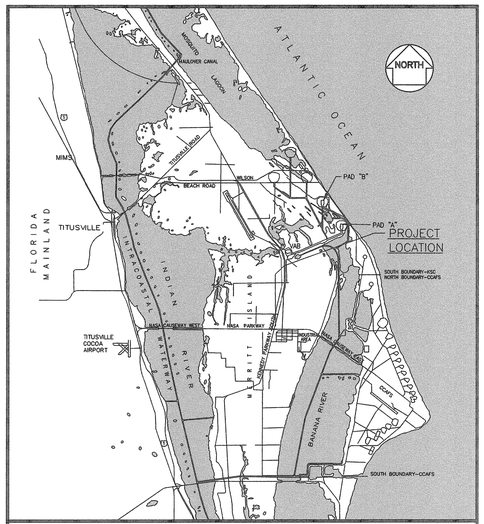

VICINITY MAP

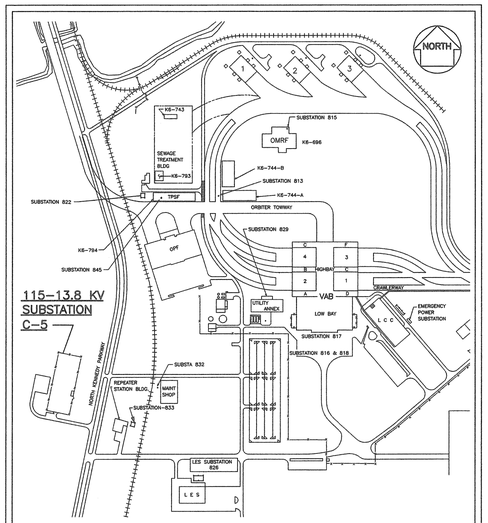

C–5 SUBSTATION PROJECT LOCATION MAP

NASA KSC Export Control Office (ECO)
Export/SBU Determination Record
EDDR#_____

TITLE OF DOCUMENT:

SENSITIVE BUT UNCLASSIFIED (SBU)
INSTRUCTIONS: This item must be reviewed under the requirements for "Sensitive But Unclassified Information" as described in NPR 1600.1, Chapter 5.24 http://nodis3.gsfc.nasa.gov/main_lib.html

	Yes	No	SBU Reviewer's Signature	Date
Document contains SBU?		✓	Earl T. Carnahe	9/29/09

EXPORT CONTROL (EC)
INSTRUCTIONS: If the document includes export–controlled data, contact your directorate Export Control Representative or the KSC ECO Help Desk (867–9209) for a determination of the proper export category.
http://exportcontrol.ksc.nasa.gov/index.cfm

ECO Reviewer's Name and Organization	ECO Reviewer's Signature	Date
Ernesto T. Couch, TA-030	Earl T. Carnahe	9/29/09

	EXPORT DETERMINATION (☑ one box only)	
EAR 99 NLR	☑ EAR 99 NLR	The information contained in the document is technical in content, but is not technical data as defined by the ITAR or the EAR, and therefore is EAR 99 NLR (no export license required). (General Prohibition Six (Embargo) applies to all items subject to the EAR, i.e. items on the CCL and which EAR 99 NLR. You may not make an export or re–export contrary to the provisions of part 746 (Embargoes and Other Special Controls) of the EAR and 22 CFR part 126.1 of the ITAR.)
EAR Controlled	☐	This document is within the purview of the Export Administration Regulations (EAR), 15 CFR 730–774, and is export controlled. Unless an export license or license exemption is obtained, it shall not be transferred to specific foreign nationals, or to the U.S. or abroad, without specific approval of a knowledgeable NASA export control official, and/or unless an export license or license exemption is obtained/available from the Bureau of Industry and Security, United States Department of Commerce. *Violations of these regulations are punishable by fine, imprisonment, or both.*
ITAR Controlled	☐	This document contains information which falls under the purview of the U.S. Munitions List (USML), as defined in the International Traffic in Arms Regulations (ITAR), 22 CFR 120–130, and is export controlled. It shall not be transferred to foreign nationals, in the U.S. or abroad, without specific approval of a knowledgeable NASA export control official, and/or unless an export license or license exemption is obtained/available from the United States Department of State. *Violations of these regulations are punishable by fine, imprisonment, or both.*

(Stamp Revision: (05–19–2009)

PROVIDE SHALL MEAN TO FURNISH AND INSTALL.
TECHNICAL SPECIFICATION 79K38613

Prepared By:

Fred Wilson & Associates, Inc.
Consulting Engineers
C.A. NO. 7188 • 904-398-8636
3970 Hendricks Avenue • Jacksonville, FL 32207

SYM.	ZONE	DESCRIPTION	DATE	APPROVED
		REVISIONS		

ENGINEER OF RECORD: LARRY JONES P.E. LICENSE NO. 19837
Fred Wilson & Associates, Inc.
Consulting Engineers
C.A. NO. 7188 • 904-398-8636
3970 Hendricks Avenue • Jacksonville, FL 32207

SIGNATURES		DATE
DESIGNED	M. YUDIN	4/09
DRAWN	C. GATES	4/09
CHECKED	L. JONES	4/09
SUBMITTED		9/29/09
APPROVED		9/29/09
APPROVED		9/29/09
APPROVED		
APPROVED		
APPROVED		
APPROVED		

NATIONAL AERONAUTICS AND SPACE ADMINISTRATION
JOHN F. KENNEDY SPACE CENTER, NASA
KENNEDY SPACE CENTER, FLORIDA

MODIFY C–5 SUBSTATION FOR RING BUS CONFIGURATION

VICINITY MAP, PROJECT LOCATION MAP AND INDEX OF DRAWINGS

FILE NO.	SIZE	DWG. NO.
	F	79K38551
PROJ. NO. PCN 98778		SHEET 1 OF 37

A/E FILE No. 0601\0601–25\0601–25.5
FILE: V1.DWG
THIS DRAWING PREPARED BY AutoCAD 2008

V1

NOTICE – WHEN GOVERNMENT DRAWINGS, SPECIFICATIONS, OR OTHER DATA ARE USED FOR ANY PURPOSE OTHER THAN IN CONNECTION WITH A DEFINITELY RELATED GOVERNMENT PROCUREMENT OPERATION, THE UNITED STATES GOVERNMENT THEREBY INCURS NO RESPONSIBILITY NOR ANY OBLIGATION WHATSOEVER; AND THE FACT THAT THE GOVERNMENT MAY HAVE FORMULATED, FURNISHED, OR IN ANY WAY SUPPLIED THE SAID DRAWINGS, SPECIFICATIONS OR OTHER DATA IS NOT TO BE REGARDED BY IMPLICATION OR OTHERWISE AS IN ANY MANNER LICENSING THE HOLDER OR ANY OTHER PERSON OR CORPORATION, OR CONVEYING ANY RIGHTS OR PERMISSION TO MANUFACTURE, USE, OR SELL ANY PATENTED INVENTION THAT MAY IN ANY WAY BE RELATED THERETO.

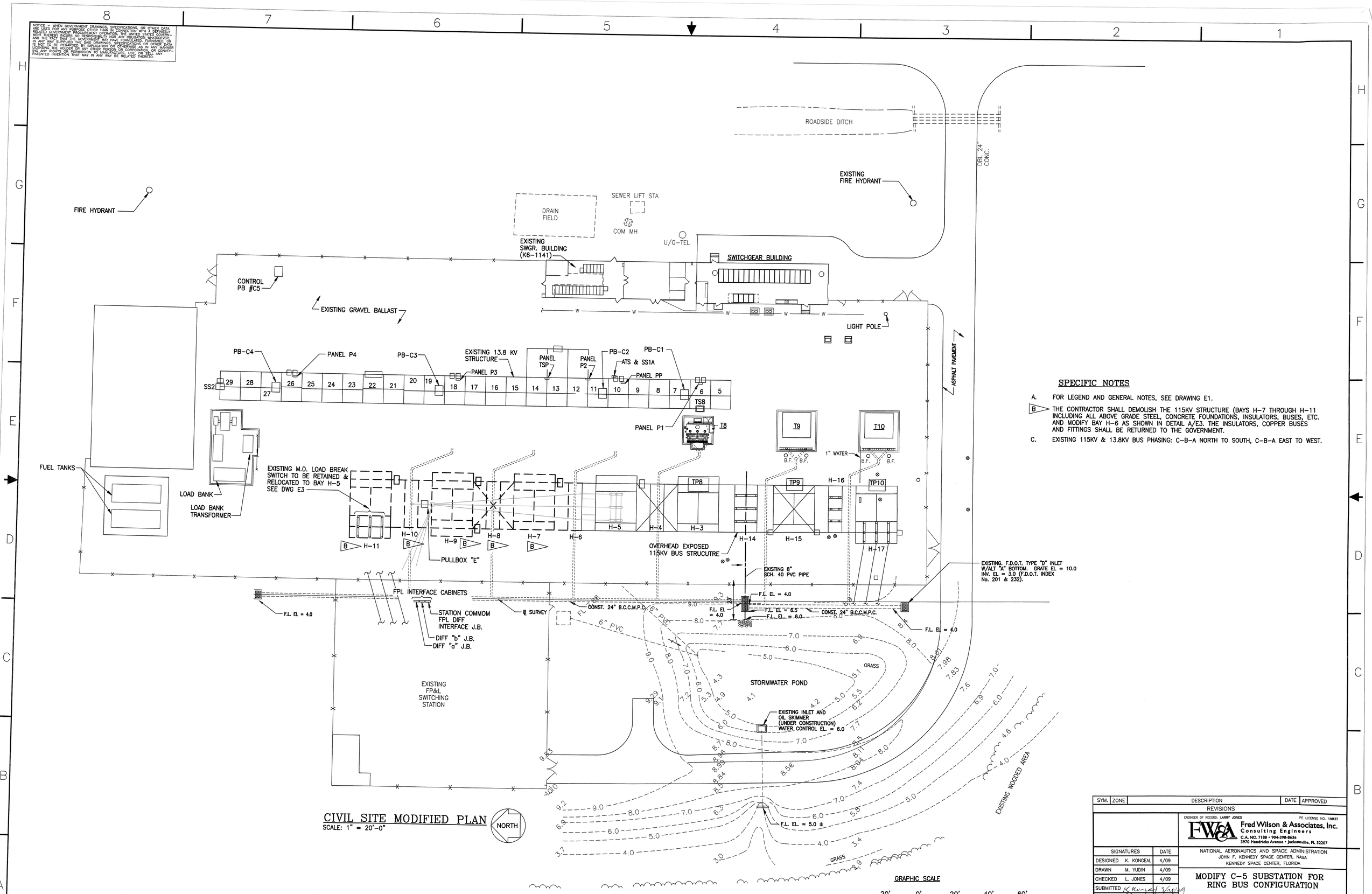

CIVIL SITE MODIFIED PLAN

SCALE: 1" = 20'-0"

SPECIFIC NOTES

A. FOR LEGEND AND GENERAL NOTES, SEE DRAWING E1.

B. THE CONTRACTOR SHALL DEMOLISH THE 115KV STRUCTURE (BAYS H-7 THROUGH H-11 INCLUDING ALL ABOVE GRADE STEEL, CONCRETE FOUNDATIONS, INSULATORS, BUSES, ETC. AND MODIFY BAY H-6 AS SHOWN IN DETAIL A/E3. THE INSULATORS, COPPER BUSES AND FITTINGS SHALL BE RETURNED TO THE GOVERNMENT.

C. EXISTING 115KV & 13.8KV BUS PHASING: C-B-A NORTH TO SOUTH, C-B-A EAST TO WEST.

SYM.	ZONE	DESCRIPTION	DATE	APPROVED
		REVISIONS		

ENGINEER OF RECORD: LARRY JONES — PE LICENSE NO. 19837

Fred Wilson & Associates, Inc.
Consulting Engineers
C.A. NO. 7188 • 904-398-8636
3970 Hendricks Avenue • Jacksonville, FL 32207

SIGNATURES		DATE
DESIGNED	K. KONGEAL	4/09
DRAWN	M. YUDIN	4/09
CHECKED	L. JONES	4/09
SUBMITTED	K Kongeal	7/24/09
APPROVED	L. Jones	7/24/09
APPROVED		
APPROVED		
APPROVED		
APPROVED		
APPROVED		

NATIONAL AERONAUTICS AND SPACE ADMINISTRATION
JOHN F. KENNEDY SPACE CENTER, NASA
KENNEDY SPACE CENTER, FLORIDA

MODIFY C-5 SUBSTATION FOR RING BUS CONFIGURATION

MODIFED CIVIL SITE PLAN

FILE NO. | SIZE F | DWG. NO. 79K38551

PROJ. NO. PCN 98778 | SHEET 2

A/E FILE No. 0601\0601-25\0601-25.5
FILE: C1.DWG
THIS DRAWING PREPARED BY AutoCAD 2005

C1

KSC FORM 1-11A (REV 6/91) (C/G 12/93)

09/24/2009 F:\ELECT\0601\0601-25\0601-25.5\C1

NOTICE – WHEN GOVERNMENT DRAWINGS, SPECIFICATIONS, OR OTHER DATA ARE USED FOR ANY PURPOSE OTHER THAN IN CONNECTION WITH A DEFINITELY RELATED GOVERNMENT PROCUREMENT OPERATION, THE UNITED STATES GOVERNMENT THEREBY INCURS NO RESPONSIBILITY NOR ANY OBLIGATION WHATSOEVER; AND THE FACT THAT THE GOVERNMENT MAY HAVE FORMULATED, FURNISHED, OR IN ANY WAY SUPPLIED THE SAID DRAWINGS, SPECIFICATIONS, OR OTHER DATA, IS NOT TO BE REGARDED BY IMPLICATION OR OTHERWISE AS IN ANY MANNER LICENSING THE HOLDER OR ANY OTHER PERSON OR CORPORATION, OR CONVEYING ANY RIGHTS OR PERMISSION TO MANUFACTURE, USE, OR SELL ANY PATENTED INVENTION THAT MAY IN ANY WAY BE RELATED THERETO.

GENERAL NOTES

1. UNDERGROUND UTILITIES HAVE BEEN LOCATED BY REFERRING TO ALL KNOWN RECORD DRAWINGS, BY CONFERRING WITH THE ISC PERSONNEL, TOPOGRAPHIC SURVEY, BY VISUAL OBSERVATIONS ALONG THE ROUTE AND BY THE USE OF UNDERGROUND LOCATORS. OTHER UNDERGROUND UTILITIES NOT FOUND OR SHOWN MAY BE PRESENT. THE LOCATION OF UTILITIES SHOWN ARE TO BE CONSIDERED APPROXIMATE ONLY, AND THE DRAWINGS SHALL NOT BE SCALED TO DETERMINE EXACT LOCATIONS. CONTRACTOR SHALL BE RESPONSIBLE FOR DETERMINING THE EXACT LOCATION AND ELEVATION OF THESE UTILITIES IN A TIMELY AND COORDINATED MANNER WHICH WILL ALLOW MODIFICATIONS TO THE PROPOSED ELEVATION OR CONFIGURATION OF NEW WORK, IF REQUIRED TO COMPENSATE FOR A CHANGED CONDITION..
2. PRIOR TO EXCAVATION OF THE CONCRETE PADS, CONDUITS, ETC. INSIDE THE SUBSTATION, THE CONTRACTOR SHALL REMOVE AND STOCKPILE GRAVEL WHICH MAY BE DISTURBED. IF REQUIRED, THE CONTRACTOR SHALL INSTALL A SILT FENCE TO CONTAIN THE GRAVEL. THE CONTRACTOR SHALL COORDINATE THE LOCATION OF THE STOCKPILED GRAVEL WITH CONTRACTING OFFICER OR HIS TECHNICAL REPRESENTATIVE AND WITH KSC ENVIRONMENTAL SERVICES. AFTER CONSTRUCTION IS COMPLETE, THE CONTRACTOR SHALL RESTORE THE GRAVEL IN THE SUBSTATION. PROVIDE ADDITIONAL GRAVEL (PER SPECIFICATION 16310) AS NECESSARY TO ESTABLISH NOT LESS THAN 8" DEPTH OF CLEAN GRAVEL.
3. THE CONTRACTOR SHALL EXERCISE CAUTION WHEN EXCAVATING AT THE SUBSTATION AREA. UNDERGROUND UTILITIES MAY EXIST WHICH ARE NOT INDICATED ON THE DRAWINGS. EXACT LOCATION OF BURIED UTILITIES SHALL BE NOTED BY THE CONTRACTOR ON "AS-BUILT" DRAWINGS.
4. ALL ELECTRICAL WORK AND MATERIAL, UNLESS NOTED AS EXISTING OR GOVERNMENT FURNISHED, IS NEW AND SHALL BE PROVIDED BY THE CONTRACTOR. ALL ELECTRICAL CONNECTIONS ARE TO BE PERFORMED BY THE CONTRACTOR.
5. AS DETERMINED BY THE CONTRACTING OFFICER, UNPAINTED/UNCOATED EXTERIOR ENCLOSURES SHALL BE PAINTED/COATED IN ACCORDANCE WITH NASA-STD-5008A. SPOT REPAIR AND CORROSION CONTROL, AS NECESSARY, SHALL BE DONE TO THE 115KV STRUCTURE. IT IS ANTICIPATED THAT NO MORE THAN APPROXIMATELY 200 SQUARE FEET OF STRUCTURAL STEEL WILL BE AFFECTED.
6. REMOVE ALL CONTROL CABLES AND WIRING TO EQUIPMENT BEING REPLACED. ABANDONED CABLES SHALL BE REMOVED COMPLETELY FROM EXISTING CONDUITS, PULLBOXES AND VAULTS. (THE ISC SHALL BE TASKED TO VERIFY ALL CONTROL POINTS ON THE EXISTING BREAKERS AND CONTROL PANELS. ONCE THE CONTROL POINTS HAVE BEEN VERIFIED, THE CONTRACTOR SHALL COORDINATE WITH THE CONTRACTING OFFICER PRIOR TO PERFORMING ANY WORK ON THE EXISTING BREAKERS AND BREAKER CONTROL PANELS). SPECIFIC PROCEDURES AS OUTLINED BY THE ISC MUST BE FOLLOWED BY THE CONTRACTOR WHEN WORKING AROUND THE EXISTING CONTROL AND RELAY WIRING INSTALLATIONS.
   THE CONTRACTOR WILL BE REQUIRED TO COORDINATE ALL WORK WITH THE ISC AND THE CONTRACTING OFFICER FOR ALL SYSTEMS THAT ARE NOT INCLUDED IN THE CONTRACT. ALL NEW A.C. AND D.C. POWER CABLES AND CONTROL CABLES MUST BE INSTALLED AS A SINGLE RUN. NO SPLICES ARE PERMITTED.
7. THE CONTRACTOR SHALL EXERCISE EXTREME CAUTION DURING CABLE INSTALLATION IN THE EXISTING PULL BOXES. THE PULL BOXES CONTAIN ENERGIZED CIRCUITS THAT MUST REMAIN IN SERVICE. ANY REQUIRED OUTAGES SHALL BE COORDINATED WITH THE GOVERNMENT.
8. THE GOVERNMENT MAINTAINS MONITORING WELLS AT THE C-5 SUBSTATION SITE. THE CONTRACTOR SHALL EXERCISE CARE SO AS NOT TO DISTURB MONITORING SITES AT THIS LOCATION DURING CONSTRUCTION. COORDINATE WITH THE CONTRACTING OFFICER FOR WORK REQUIRED WHICH MAY DISTURB THE MONITORING WELLS. (THE MONITORING WELLS THAT MAY BE AFFECTED ARE SHOWN IN THEIR APPROXIMATE LOCATIONS ON THE SITE AND CONDUIT PLANS).
9. ALL GROUND RODS SHALL BE INSTALLED UTILIZING THE WATER JETTING METHOD.
10. THE CONTRACTOR SHALL COORDINATE ANY REQUIRED OUTAGES WITH THE GOVERNMENT. OUTAGE REQUESTS MUST BE SUBMITTED AT LEAST 21 WORKING DAYS PRIOR TO THE START OF THE OUTAGE.
11. COORDINATE ALL WORK WITH THE ISC AND FPL BEFORE REMOVING OR CHANGING ANY OF THE 115KV DIFFERENTIAL INTERCONNECTING CABLES.
12. IF WALL PENETRATIONS ARE REQUIRED, GROUT AND SEAL PENETRATIONS WITH WATERPROOF MATERIALS AFTER CONDUITS ARE INSTALLED. PAINT WALLS AND CONDUITS TO MATCH BUILDING EXTERIORS.
13. WHERE THE CONTRACT DRAWINGS DEPICT AC OR DC SCHEMATICS, PANEL WIRING OR EQUIPMENT INTERCONNECTIONS, THE DRAWINGS ARE INCLUDED TO INDICATE THE "FUNCTIONAL" AND/OR "REPRESENTATIVE FIELD WIRING" INTERCONNECTIONS REQUIRED FOR THE PROJECT ONLY. THE CONTRACTOR SHALL BE RESPONSIBLE TO PREPARE AND SUBMIT THE ACTUAL FIELD RECORD DRAWINGS STRICTLY IN ACCORDANCE WITH REQUIREMENTS OF SECTION 16960 OF THE CONTRACT SPECIFICATIONS.

SINGLE LINE, SCHEMATIC & CONNECTION DIAGRAMS LEGEND

- NOTE REFERENCE
- POTENTIAL TRANSFORMER
- CURRENT TRANSFORMER, 1 PER PHASE (WITH POLARITY INDICATED) 1200:5 MR – MULTI RATIO CONN 1200:5 – CONNECTED TAP
- TRANSFORMER WITH LTC
  - DELTA CONNECTED PRIMARY
  - GROUNDED WYE CONNECTED SECONDARY
- S.A. SURGE ARRESTOR
- GROUND
- FUSE
- EXISTING EQUIPMENT
- REMOVE EQUIPMENT
- PROVIDE EQUIPMENT
- EXISTING TRANSFORMER
- REMOVE TRANSFORMER
- CONNECTION – DELTA, GROUNDED WYE
- REMOVE DISCONNECT SWITCH
- PROVIDE DISCONNECT SWITCH
- EXISTING DISCONNECT SWITCH (NORMALLY OPEN) N.O. – NORMALLY OPEN N.C. – NORMALLY CLOSED
- 50 51 SEL 751A — FEEDER PROTECTION RELAY
- 87TB TPS SEL 787 — TRANSFORMER PROTECTION (DIFFERENTIAL) RELAY
- 87c SEL 587Z — BUS DIFFERENTIAL RELAY LOWER CASE LETTER INDICATES BUS DIFFERENTIAL ZONE.
- GANG OPERATED DOUBLE END BREAK DISCONNECT SWITCH
- EXISTING CIRCUIT BREAKER
- REMOVE CIRCUIT BREAKER
- PROVIDE SF6 CIRCUIT BREAKER
- M — EXISTING 115KV MOTOR OPERATED SWITCH
- M — EXISTING 115KV MOTOR OPERATED LOAD BREAK SWITCH
- HOOK STICK OPERATED DISCONNECT SWITCH
- R — INDICATING LIGHT –R–RED W–WHITE G–GREEN A–AMBER
- NORMALLY OPEN CONTACT
- NORMALLY CLOSED CONTACT
- SOLENOID, RELAY, COIL
- 1 1X1 / 2 3X1 / 3 5X1 / 4 5X2 — 1 2 / 3 4 / 5 6 / 7 8 — SHORTING TYPE TERMINAL BLOCK
- --R--- REMOVE WIRING & CONNECTIONS
- 50BF1: 50BFx, 50BFy — SEL 501 — DUAL COIL OVERCURRENT (BREAKER FAILURE) RELAY (x) X COIL (y) Y COIL
- 86BF — BREAKER FAILURE LOCKOUT RELAY
- 86 — LOCKOUT RELAY (T–TRANSFORMER, B–BUS)
- C(L–), G, RES, L+, 4 2 3 1 PTT — PUST–TO–TEST INDICATING LIGHT R–RED W–WHITE A–AMBER

PLAN LEGEND

- ----A---- REMOVE CONDUCTORS, ABANDON CONDUIT
- —— UE —— EXISTING UNDERGROUND CONDUIT OR DUCT TO REMAIN.
- —— UE —— EXISTING UNDERGROUND CONDUIT OR DUCT WITH NEW CONDUCTORS.
- —— UEN —— NEW UNDERGROUND CONDUIT OR DUCT.
- EXISTING GROUNDING CABLE.
- NEW GROUNDING CABLE.
- EXOTHERMIC GROUND CONNECTIONS
- PB–C1 — EXISTING ELECTRICAL PULL BOX
- A — NOTE REFERENCE
- —— X —— FENCE
- —— COM —— EXISTING COMMUNICATION CONDUIT OR DUCT
- —— W —— EXISTING WATER LINE
- POWER POLE
- CONDUIT TURNING DOWN OR AWAY FROM OBSERVER
- CONDUIT TURNING UP OR TOWARD OBSERVER
- PROVIDE CONDUIT AS SPECIFIED
- —— E —— EXISTING CONDUIT OR CONDUCTORS
- MONITORING WELL

ABBREVIATIONS

A	–	AMMETER	KCMIL	–	THOUSAND CIRCULAR MILS
AIC	–	AMPS INTERRUPTING CAPACITY	LTC	–	LOAD TAP CHANGER
AS	–	AMMETER SWITCH	MH	–	MANHOLE
BIL	–	BASIC INSULATION IMPULSE LEVEL (WITHSTAND RATING)	M.O.	–	MOTOR OPERATED
BKR	–	BREAKER	MRCT	–	MULTI–RATIO CURRENT TRANSFORMER
BSD	–	BARE SOFT DRAWN	N.I.C.	–	NOT IN CONTRACT
C. CDT.	–	CONDUIT	O.H.	–	OVERHEAD
CKT.	–	CIRCUIT	PCB	–	POLYCHLORINATED BIPHENYLS
COMM	–	COMMUNICATION CABLE	PPM	–	PARTS PER MILLION
CU	–	COPPER	PTT	–	PUSH TO TEST
FDR	–	FEEDER	SEL	–	SCHWEITZER ENGINEERING LABORATORIES
GFE	–	GOVERNMENT FURNISHED EQUIPMENT	SF6	–	SULFUR HEXAFLOURIDE
GRS	–	GALVANIZED RIGID STEEL	STA SVC	–	STATION SERVICE
ISC	–	INSTITUTIONAL SERVICES CONTRACTOR	SW	–	SWITCH
J.B.	–	JUNCTION BOX	TRANSF.	–	TRANSFORMER
KCCS	–	KENNEDY COMPLEX CONTROL SYSTEM	U/G	–	UNDERGROUND
			VAC	–	VACUUM
			VCB	–	VACUUM CIRCUIT BREAKER

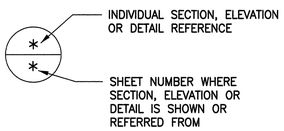

DETAIL REFERENCE

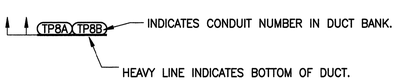

SUBSTATION DUCT BANK SECTION

LOOKING IN DIRECTION OF ARROWS

SYM.	ZONE	DESCRIPTION	DATE	APPROVED
		REVISIONS		

ENGINEER OF RECORD: LARRY JONES — PE LICENSE NO. 19837

Fred Wilson & Associates, Inc. Consulting Engineers
C.A. NO. 7188 • 904-398-8636
3970 Hendricks Avenue • Jacksonville, FL 32207

SIGNATURES		DATE
DESIGNED	M. YUDIN	4/09
DRAWN	C. GATES	4/09
CHECKED	L. JONES	4/09
SUBMITTED		9/24/09
APPROVED		9/24/09
APPROVED		
APPROVED		
APPROVED		
APPROVED		
APPROVED		

NATIONAL AERONAUTICS AND SPACE ADMINISTRATION
JOHN F. KENNEDY SPACE CENTER, NASA
KENNEDY SPACE CENTER, FLORIDA

MODIFY C–5 SUBSTATION FOR RING BUS CONFIGURATION

LEGEND AND GENERAL NOTES

FILE NO. | SIZE F | DWG. NO. 79K38551

PROJ. NO. PCN 98778 | SHEET 3

A/E FILE No. 0601\0601–25\0601–25.5
FILE: E1.DWG
THIS DRAWING PREPARED BY AutoCAD 2008

E1

NOTICE – WHEN GOVERNMENT DRAWINGS, SPECIFICATIONS, OR OTHER DATA ARE USED FOR ANY PURPOSE OTHER THAN IN CONNECTION WITH A DEFINITELY RELATED GOVERNMENT PROCUREMENT OPERATION, THE UNITED STATES GOVERNMENT THEREBY INCURS NO RESPONSIBILITY NOR ANY OBLIGATION WHATSOEVER; AND THE FACT THAT THE GOVERNMENT MAY HAVE FORMULATED, FURNISHED, OR IN ANY WAY SUPPLIED THE SAID DRAWINGS, SPECIFICATIONS OR OTHER DATA IS NOT TO BE REGARDED BY IMPLICATION OR OTHERWISE AS IN ANY MANNER LICENSING THE HOLDER OR ANY OTHER PERSON OR CORPORATION, OR CONVEYING ANY RIGHTS OR PERMISSION TO MANUFACTURE, USE, OR SELL ANY PATENTED INVENTION THAT MAY IN ANY WAY BE RELATED THERETO.

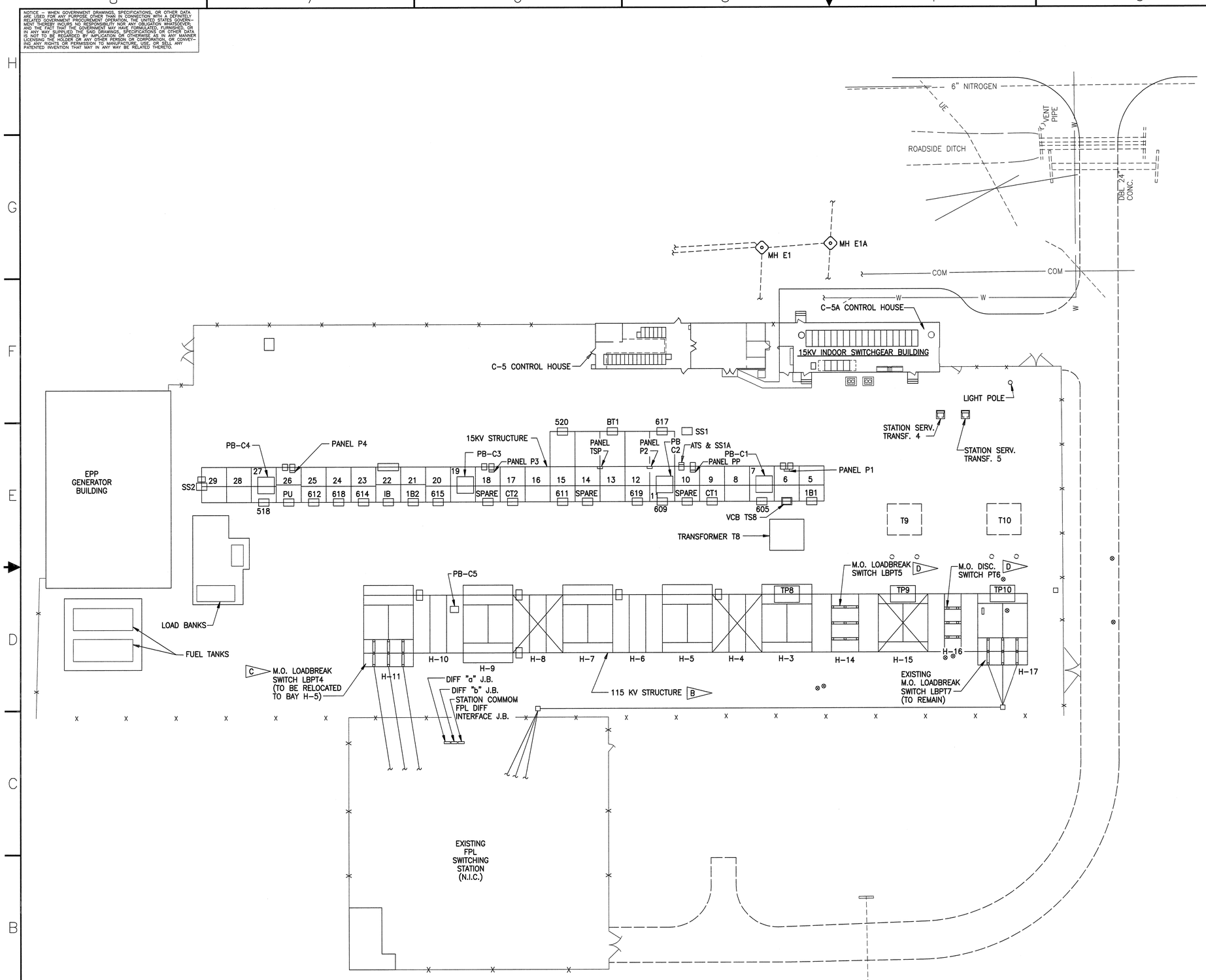

MODIFIED ELECTRICAL SITE PLAN
C-5 SUBSTATION

SCALE: 1" = 20'-0"

SPECIFIC NOTES

A. FOR LEGEND AND GENERAL NOTES, SEE DRAWING E1.

B. THE CONTRACTOR SHALL DEMOLISH THE 115KV STRUCTURE (BAYS H-7 THROUGH H-11) INCLUDING ALL ABOVE GRADE STEEL, CONCRETE FOUNDATIONS, INSULATORS, BUSES, ETC. AND MODIFY BAY H-6 AS SHOWN IN DETAIL A/E3. INSULATORS, COPPER BUSES AND FITTINGS SHALL BE RETURNED TO THE GOVERNMENT.

C. M.O. LOADBREAK SWITCH LBPT4 SHALL BE RELOCATED TO BAY H-5. SEE DRAWING E3.

D. THE CONTRACTOR SHALL REMOVE SWITCHES LBPT5 AND PT6 AND THEIR MOTOR OPERATORS AND RETURN TO THE GOVERNMENT.

GRAPHIC SCALE

1"= 20'- 0" 20' 0' 20' 40' 60'

SYM.	ZONE	DESCRIPTION	DATE	APPROVED
		REVISIONS		

ENGINEER OF RECORD: LARRY JONES — PE LICENSE NO. 19837

Fred Wilson & Associates, Inc.
Consulting Engineers
C.A. NO. 7188 • 904-398-8636
3970 Hendricks Avenue • Jacksonville, FL 32207

SIGNATURES		DATE
DESIGNED	M. YUDIN	4/09
DRAWN	R. LENOVER	4/09
CHECKED	L. JONES	4/09
SUBMITTED		9/24/09
APPROVED		9/24/09
APPROVED		
APPROVED		
APPROVED		
APPROVED		
APPROVED		

NATIONAL AERONAUTICS AND SPACE ADMINISTRATION
JOHN F. KENNEDY SPACE CENTER, NASA
KENNEDY SPACE CENTER, FLORIDA

MODIFY C-5 SUBSTATION FOR RING BUS CONFIGURATION

EXISTING SITE PLAN
C-5 SUBSTATION

FILE NO.	SIZE	DWG. NO.
	F	79K38551
PROJ. NO. PCN 98778		SHEET 4

A/E FILE No. 0601\0601-25\0601-25.5
FILE: E2.DWG
THIS DRAWING PREPARED BY AutoCAD 2008

E2

NOTICE – WHEN GOVERNMENT DRAWINGS, SPECIFICATIONS, OR OTHER DATA ARE USED FOR ANY PURPOSE OTHER THAN IN CONNECTION WITH A DEFINITELY RELATED GOVERNMENT PROCUREMENT OPERATION, THE UNITED STATES GOVERNMENT THEREBY INCURS NO RESPONSIBILITY NOR ANY OBLIGATION WHATSOEVER; AND THE FACT THAT THE GOVERNMENT MAY HAVE FORMULATED, FURNISHED, OR IN ANY WAY SUPPLIED THE SAID DRAWINGS, SPECIFICATIONS OR OTHER DATA IS NOT TO BE REGARDED BY IMPLICATION OR OTHERWISE IN ANY MANNER LICENSING THE HOLDER OR ANY OTHER PERSON OR CORPORATION, OR CONVEYING ANY RIGHTS OR PERMISSION TO MANUFACTURE, USE, OR SELL ANY PATENTED INVENTION THAT MAY IN ANY WAY BE RELATED THERETO.

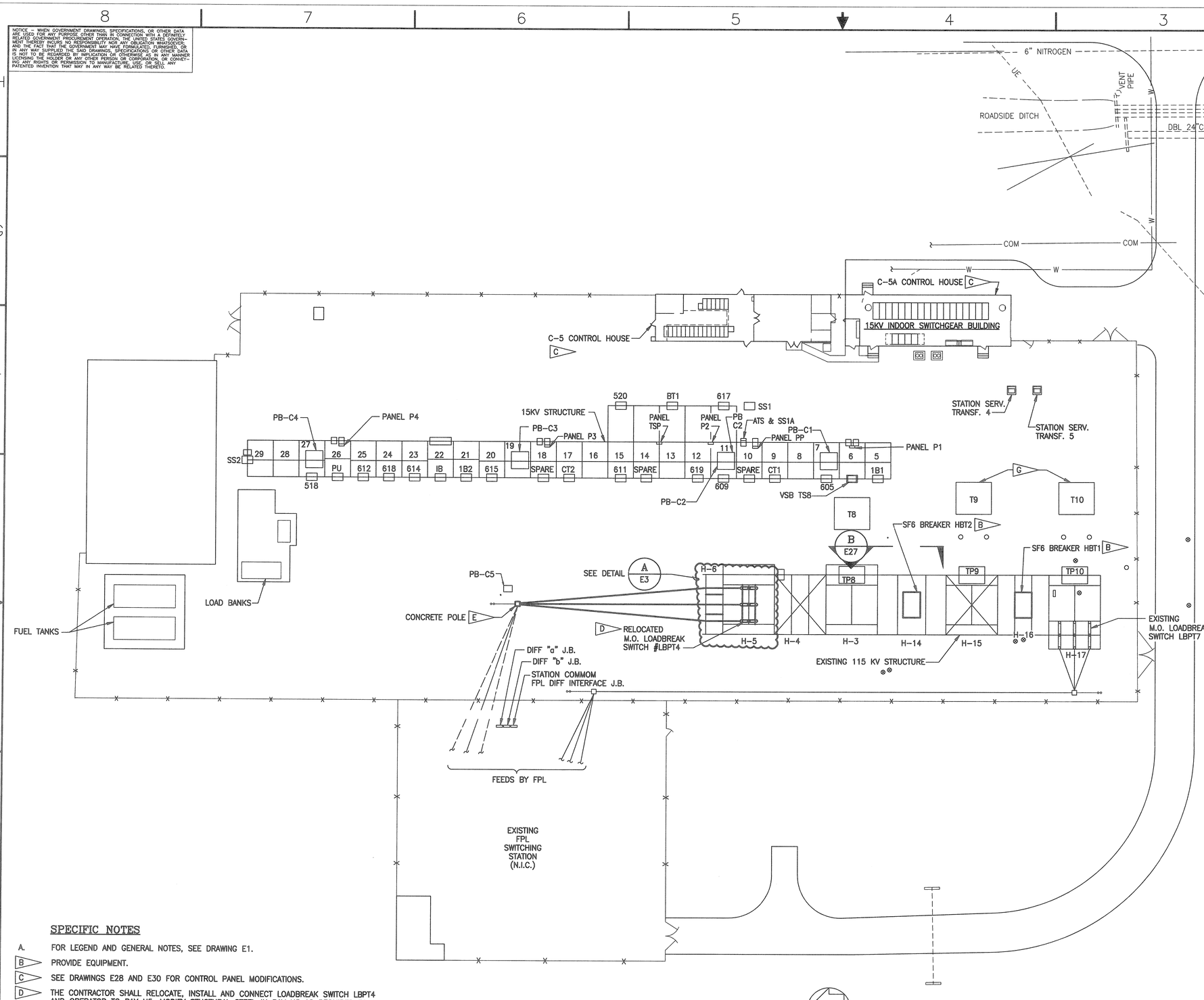

MODIFIED ELECTRICAL SITE PLAN
C-5 SUBSTATION

SCALE: 1" = 20'-0"

NORTH

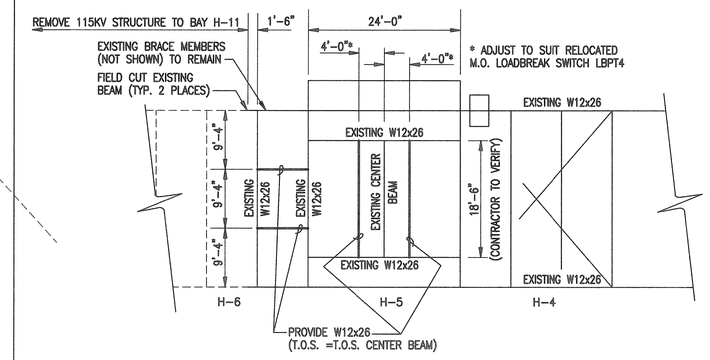

STRUCTURAL NOTES AND MATERIAL SPECIFICATIONS

STRUCTURAL GENERAL NOTES

1. STEEL CONSTRUCTION SHALL BE IN ACCORDANCE WITH THE AISC STEEL CONSTRUCTION MANUAL (13TH EDITION).
2. FIELD VERIFY ALL EXISTING STEEL DIMENSIONS BEFORE COMMENCING CONSTRUCTION. SPECIAL ATTENTION SHALL BE GIVEN TO THE MOUNTING BOLT LOCATIONS FOR SUPPORTS FOR SWITCH LBPT4 .
3. NEW BEAM CONNECTIONS SHALL BE MADE WITH DOUBLE ANGLE CONNECTIONS USING A MINIMUM OF 3 BOLTS IN EACH LEG OF ANGLES. ANGLES SHALL NOT BE LESS THAN 3/8" THICKNESS.
4. SUBMIT SHOP DRAWINGS SHOWING ALL STRUCTURAL STEEL DETAILS.
5. COMPLY WITH ALL APPLICABLE REGULATIONS WHEN FIELD-CUTTING AND/OR FIELD-DRILLING EXISTING GALVANIZED MEMBERS. REPAIR ALL SURFACES DAMAGED BY CONTRACTOR'S ACTIVITIES WITH ZRC WORLDWIDE COLD GALVANIZING, SHERWIN WILLIAMS ZINC CLAD III HS ZINC, INTERNATIONAL PAINT INTERZINC 52, OR OTHER APPROVED GALVANIZING PRODUCT.

STRUCTURAL MATERIAL SPECIFICATIONS

STRUCTURAL STEEL

BEAMS:	ASTM A992
ANGLES:	ASTM A36
PLATES:	ASTM A36

STRUCTURAL STEEL CONNECTIONS:

BOLTS:	ASTM A325 TYPE 1
NUTS:	ASTM A563 GRADE A HEAVY HEX
WASHERS:	ASTM F436

BOLTS FOR CONNECTING STRUCTURAL STEEL SHALL BE 3/4" DIAMETER. HOLES FOR BOLTS SHALL BE 13/16" DIAMETER.

GALVANIZING:

BOLTS, NUTS & WASHERS:	ASTM A153
NEW STRUCTURAL STEEL:	ASTM A123

DETAIL A (C1, E2, E3)
SCALE: 1" = 10'-0"

SPECIFIC NOTES

A. FOR LEGEND AND GENERAL NOTES, SEE DRAWING E1.

B. PROVIDE EQUIPMENT.

C. SEE DRAWINGS E28 AND E30 FOR CONTROL PANEL MODIFICATIONS.

D. THE CONTRACTOR SHALL RELOCATE, INSTALL AND CONNECT LOADBREAK SWITCH LBPT4 AND OPERATOR TO BAY H5. MODIFY STUCTURAL STEEL IN BAY H5 AS REQUIRED TO INSTALL LOADBREAK SWITCH. PROVIDE GALVANIZED HARDWARE FOR INSTALLING LOADBREAK SWITCH LBPT4. NEW HARDWARE SHALL MATCH EXISTING HARDWARE (SIZE, QUANTITY, GRADE, ETC.). PRIOR TO ENERGIZING LBPT4, THE CONTRACTOR SHALL CONDUCT TESTS ON ALL COMPONENTS OF THE EQUIPMENT INCLUDING THE MOTOR OPERATOR, IN ACCORDANCE WITH NETA ATS-2009 & MANUFACTURER'S RECOMMENDATIONS.

E. INSTALLATION OF TRANSMISSION POLE, GUYS, HARDWARE, TRANSMISSION LINE, JUMPERS AND TERMINATIONS TO LBPT4 SHALL BE COMPLETED BY FPL.

F. EXISTING 115KV & 13.8KV BUS PHASING: C-B-A NORTH TO SOUTH, C-B-A EAST TO WEST.

G. THE CONTRACTOR SHALL REPLACE THE RADIATORS, FANS AND HARDWARE ON TRANSFORMERS T9 AND T10.

GRAPHIC SCALES

1"= 20'- 0" 20' 0' 20' 40' 60'

1"= 10' 10' 0' 10' 20' 30'

SYM.	ZONE	DESCRIPTION	DATE	APPROVED
		REVISIONS		

ENGINEER OF RECORD: LARRY JONES — PE LICENSE NO. 19837

Fred Wilson & Associates, Inc.
Consulting Engineers
C.A. NO.7188 • 904-398-8636
3970 Hendricks Avenue • Jacksonville, FL 32207

SIGNATURES		DATE
DESIGNED	M. YUDIN	4/09
DRAWN	C. GATES	4/09
CHECKED	L. JONES	4/09
SUBMITTED		9/24/09
APPROVED		9/24/09
APPROVED		
APPROVED		
APPROVED		
APPROVED		
APPROVED		

NATIONAL AERONAUTICS AND SPACE ADMINISTRATION
JOHN F. KENNEDY SPACE CENTER, NASA
KENNEDY SPACE CENTER, FLORIDA

MODIFY C-5 SUBSTATION FOR RING BUS CONFIGURATION

MODIFIED SITE PLAN
C-5 SUBSTATION

FILE NO.	SIZE	DWG. NO.	
	F	79K38551	
PROJ. NO. PCN 98778		SHEET 5	

A/E FILE No. 0601\0601-25\0601-25.5
FILE: E3.DWG
THIS DRAWING PREPARED BY AutoCAD 2008

E3

NOTICE — WHEN GOVERNMENT DRAWINGS, SPECIFICATIONS, OR OTHER DATA ARE USED FOR ANY PURPOSE OTHER THAN IN CONNECTION WITH A DEFINITELY RELATED GOVERNMENT PROCUREMENT OPERATION, THE UNITED STATES GOVERNMENT THEREBY INCURS NO RESPONSIBILITY NOR ANY OBLIGATION WHATSOEVER; AND THE FACT THAT THE GOVERNMENT MAY HAVE FORMULATED, FURNISHED, OR IN ANY WAY SUPPLIED THE SAID DRAWINGS, SPECIFICATIONS OR OTHER DATA IS NOT TO BE REGARDED BY IMPLICATION OR OTHERWISE IN ANY MANNER LICENSING THE HOLDER OR ANY OTHER PERSON OR CORPORATION, OR CONVEYING ANY RIGHTS OR PERMISSION TO MANUFACTURE, USE, OR SELL ANY PATENTED INVENTION THAT MAY IN ANY WAY BE RELATED THERETO.

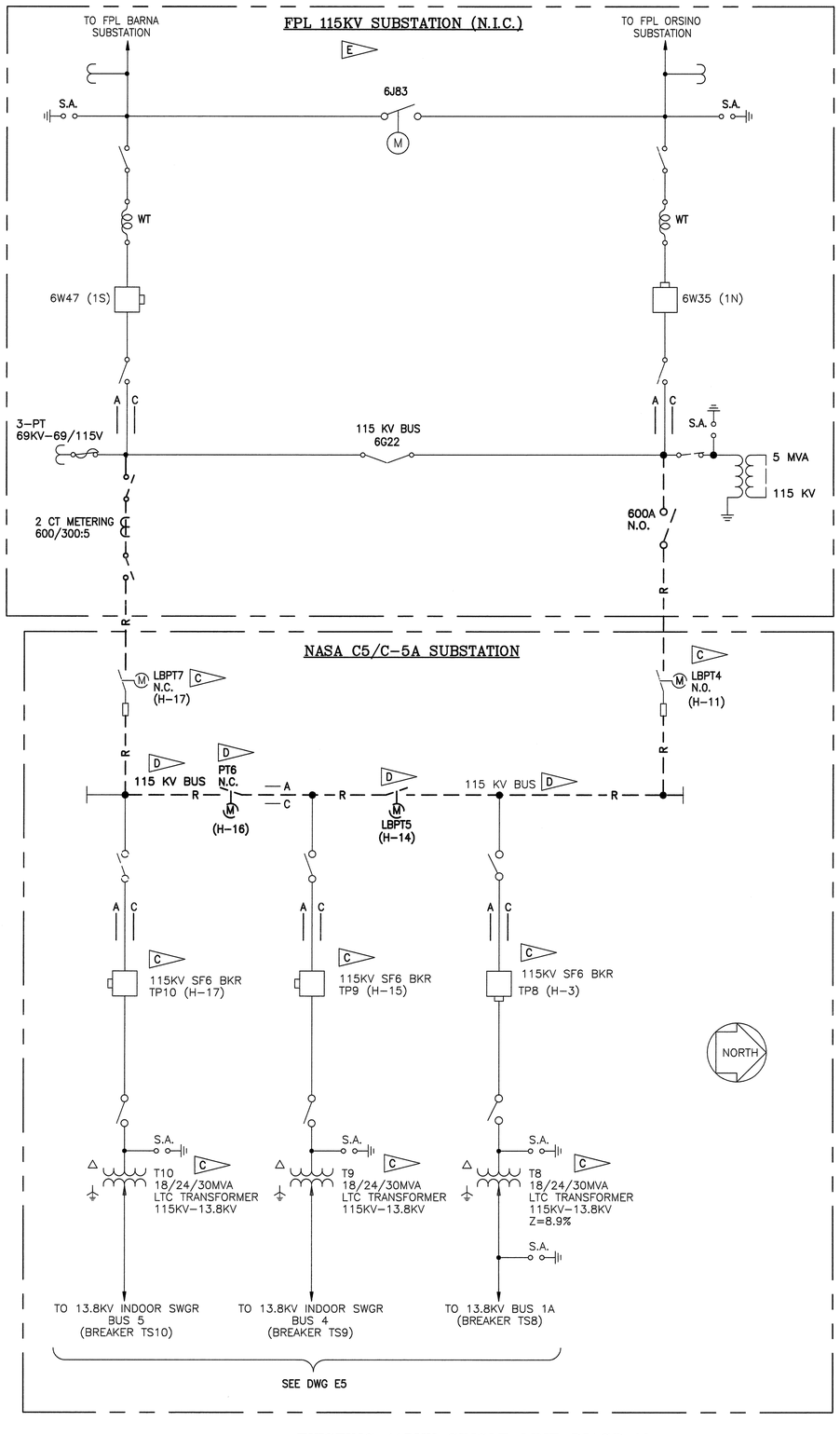

EXISTING 115KV SINGLE LINE DIAGRAM

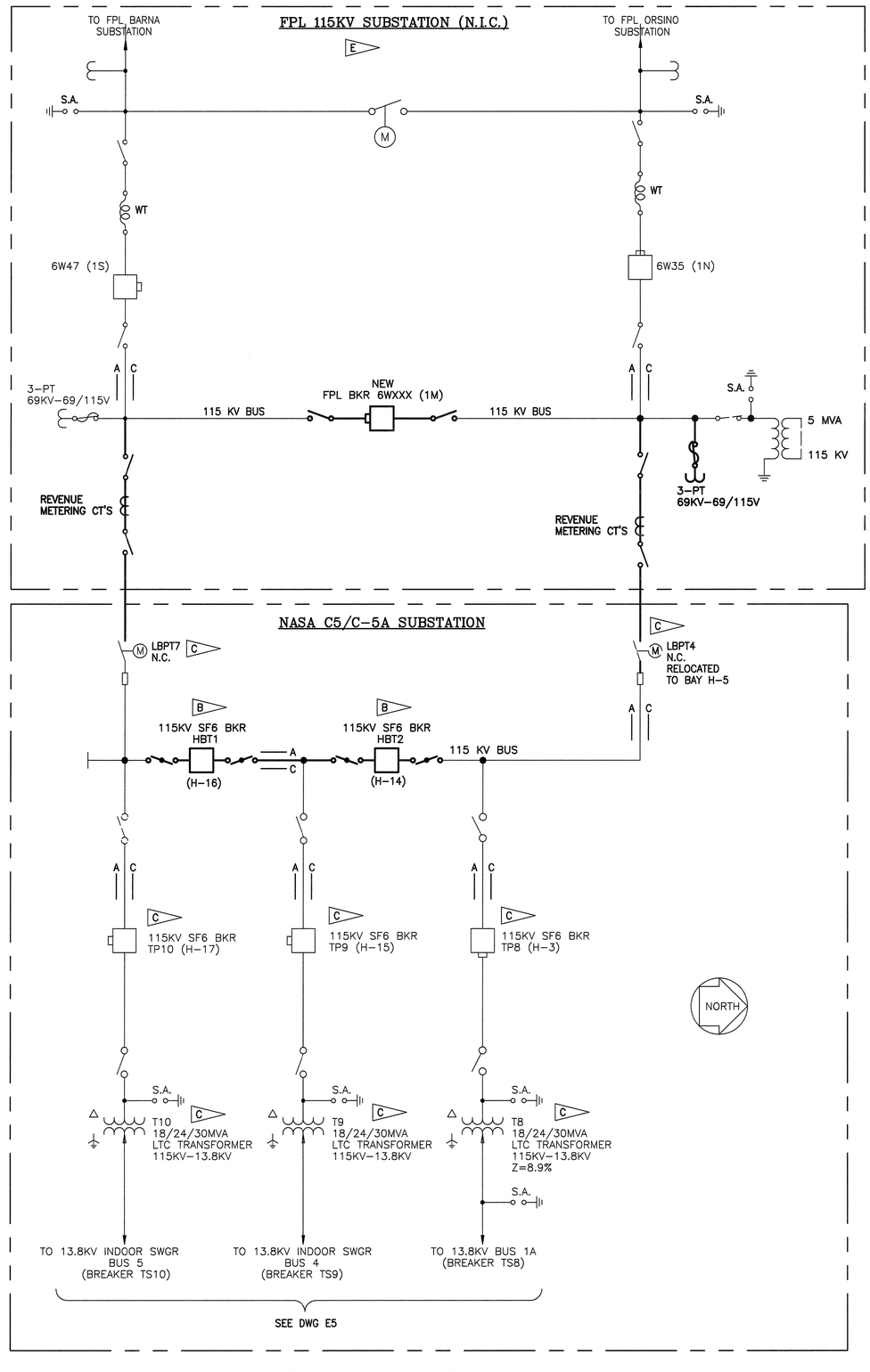

MODIFIED 115KV SINGLE LINE DIAGRAM

SPECIFIC NOTES

A. FOR LEGEND AND GENERAL NOTES, SEE DRAWING E1.

B PROVIDE EQUIPMENT.

C EXISTING EQUIPMENT.

D REMOVE EQUIPMENT.

E ALL NEW WORK SHOWN WITHIN THE BOUNDARIES OF THE FPL SUBSTATION SHALL BE DONE BY FPL.

SYM.	ZONE	DESCRIPTION	DATE	APPROVED
		REVISIONS		

ENGINEER OF RECORD: LARRY JONES — PE LICENSE NO. 19837

Fred Wilson & Associates, Inc. Consulting Engineers
C.A. NO. 7188 • 904-398-8636
3970 Hendricks Avenue • Jacksonville, FL 32207

SIGNATURES		DATE
DESIGNED	M. YUDIN	4/09
DRAWN	B. GEMMELL	4/09
CHECKED	L. JONES	4/09
SUBMITTED		9/24/09
APPROVED		9/24/09
APPROVED		
APPROVED		
APPROVED		
APPROVED		
APPROVED		

NATIONAL AERONAUTICS AND SPACE ADMINISTRATION
JOHN F. KENNEDY SPACE CENTER, NASA
KENNEDY SPACE CENTER, FLORIDA

MODIFY C-5 SUBSTATION FOR RING BUS CONFIGURATION

EXISTING AND MODIFIED SINGLE LINE DIAGRAMS

FILE NO. | SIZE F | DWG. NO. 79K38551

PROJ. NO. PCN 98778 | SHEET 6

A/E FILE No. 0601\0601-25\0601-25.5
FILE: E4.DWG
THIS DRAWING PREPARED BY AutoCAD 2008

E4

NOTICE — WHEN GOVERNMENT DRAWINGS, SPECIFICATIONS, OR OTHER DATA ARE USED FOR ANY PURPOSE OTHER THAN IN CONNECTION WITH A DEFINITELY RELATED GOVERNMENT PROCUREMENT OPERATION, THE UNITED STATES GOVERNMENT THEREBY INCURS NO RESPONSIBILITY NOR ANY OBLIGATION WHATSOEVER; AND THE FACT THAT THE GOVERNMENT MAY HAVE FORMULATED, FURNISHED, OR IN ANY WAY SUPPLIED THE SAID DRAWINGS, SPECIFICATIONS, OR OTHER DATA IS NOT TO BE REGARDED BY IMPLICATION OR OTHERWISE IN ANY MANNER WHATSOEVER, THE HOLDER OR ANY OTHER PERSON OR CORPORATION, OR CONVEYING ANY RIGHTS OR PERMISSION TO MANUFACTURE, USE, OR SELL ANY PATENTED INVENTION THAT MAY IN ANY WAY BE RELATED THERETO.

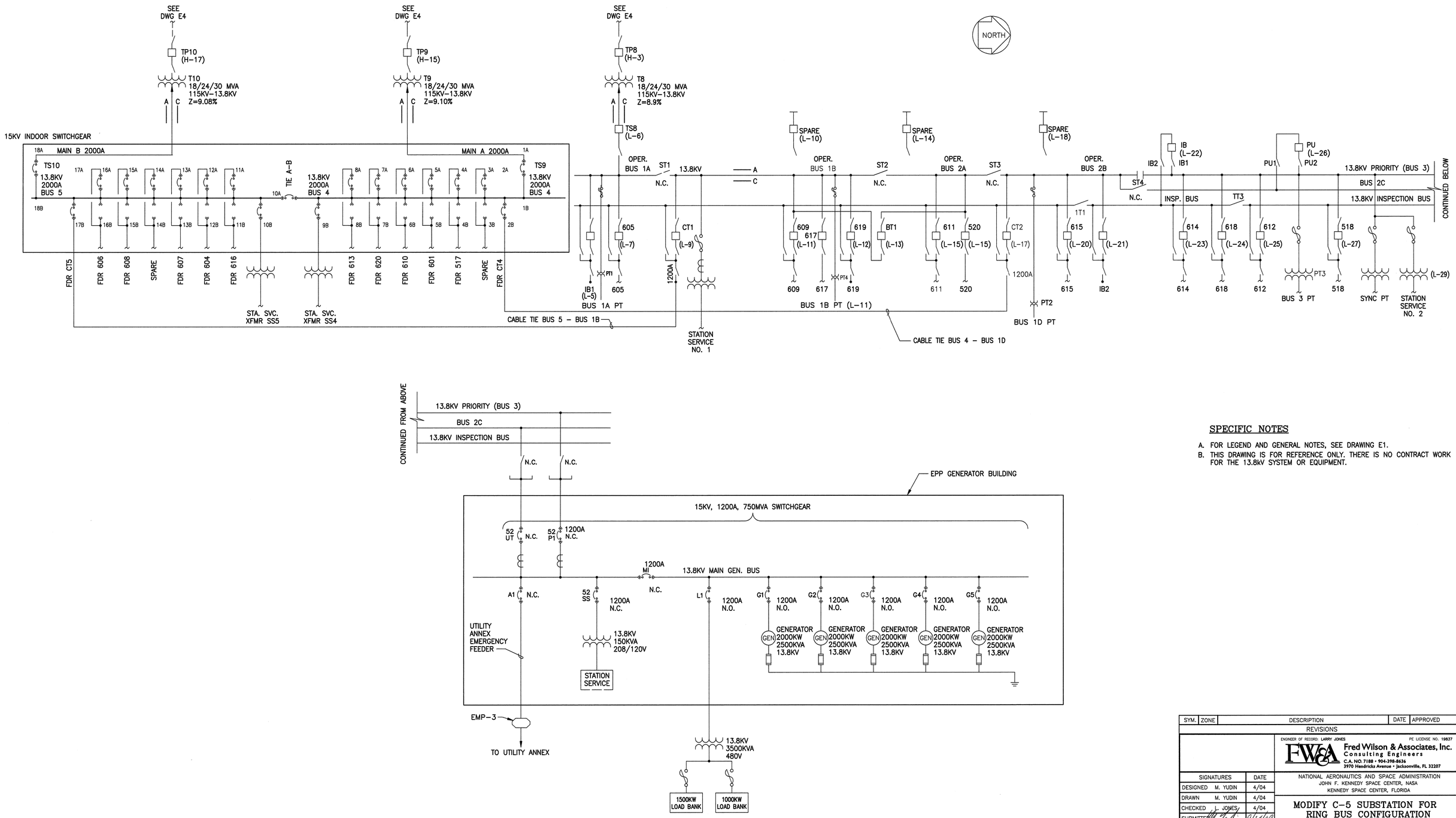

SPECIFIC NOTES

A. FOR LEGEND AND GENERAL NOTES, SEE DRAWING E1.
B. THIS DRAWING IS FOR REFERENCE ONLY. THERE IS NO CONTRACT WORK FOR THE 13.8kV SYSTEM OR EQUIPMENT.

SYM.	ZONE	DESCRIPTION	DATE	APPROVED
		REVISIONS		

ENGINEER OF RECORD: LARRY JONES — PE LICENSE NO. 19837

Fred Wilson & Associates, Inc.
Consulting Engineers
C.A. NO. 7188 • 904-398-8636
3970 Hendricks Avenue • Jacksonville, FL 32207

SIGNATURES		DATE
DESIGNED	M. YUDIN	4/04
DRAWN	M. YUDIN	4/04
CHECKED	L. JONES	4/04
SUBMITTED		9/24/09
APPROVED		9/24/09
APPROVED		
APPROVED		
APPROVED		
APPROVED		
APPROVED		

NATIONAL AERONAUTICS AND SPACE ADMINISTRATION
JOHN F. KENNEDY SPACE CENTER, NASA
KENNEDY SPACE CENTER, FLORIDA

MODIFY C-5 SUBSTATION FOR RING BUS CONFIGURATION

EXISTING 13.8KV SINGLE LINE DIAGRAM

FILE NO. | SIZE F | DWG. NO. 79K38551
PROJ. NO. PCN 98778 | SHEET 7

A/E FILE No. 0601\0601-25\0601-25.5
FILE: E5.DWG
THIS DRAWING PREPARED BY AutoCAD 2008

E5

KSC FORM 1-11A (REV 6/91) (C/G 12/93) 09/23/2009 F:\ELECT\0601\0601-25\0601-25.5\E5

NOTICE - WHEN GOVERNMENT DRAWINGS, SPECIFICATIONS, OR OTHER DATA ARE USED FOR ANY PURPOSE OTHER THAN IN CONNECTION WITH A DEFINITELY RELATED GOVERNMENT PROCUREMENT OPERATION, THE UNITED STATES GOVERNMENT THEREBY INCURS NO RESPONSIBILITY, NOR ANY OBLIGATION WHATSOEVER; AND THE FACT THAT THE GOVERNMENT MAY HAVE FORMULATED, FURNISHED, OR IN ANY WAY SUPPLIED THE SAID DRAWINGS, SPECIFICATIONS, OR OTHER DATA, IS NOT TO BE REGARDED BY IMPLICATION OR OTHERWISE AS IN ANY MANNER LICENSING THE HOLDER OR ANY OTHER PERSON OR CORPORATION, OR CONVEYING ANY RIGHTS OR PERMISSION TO MANUFACTURE, USE, OR SELL ANY PATENTED INVENTION THAT MAY IN ANY WAY BE RELATED THERETO.

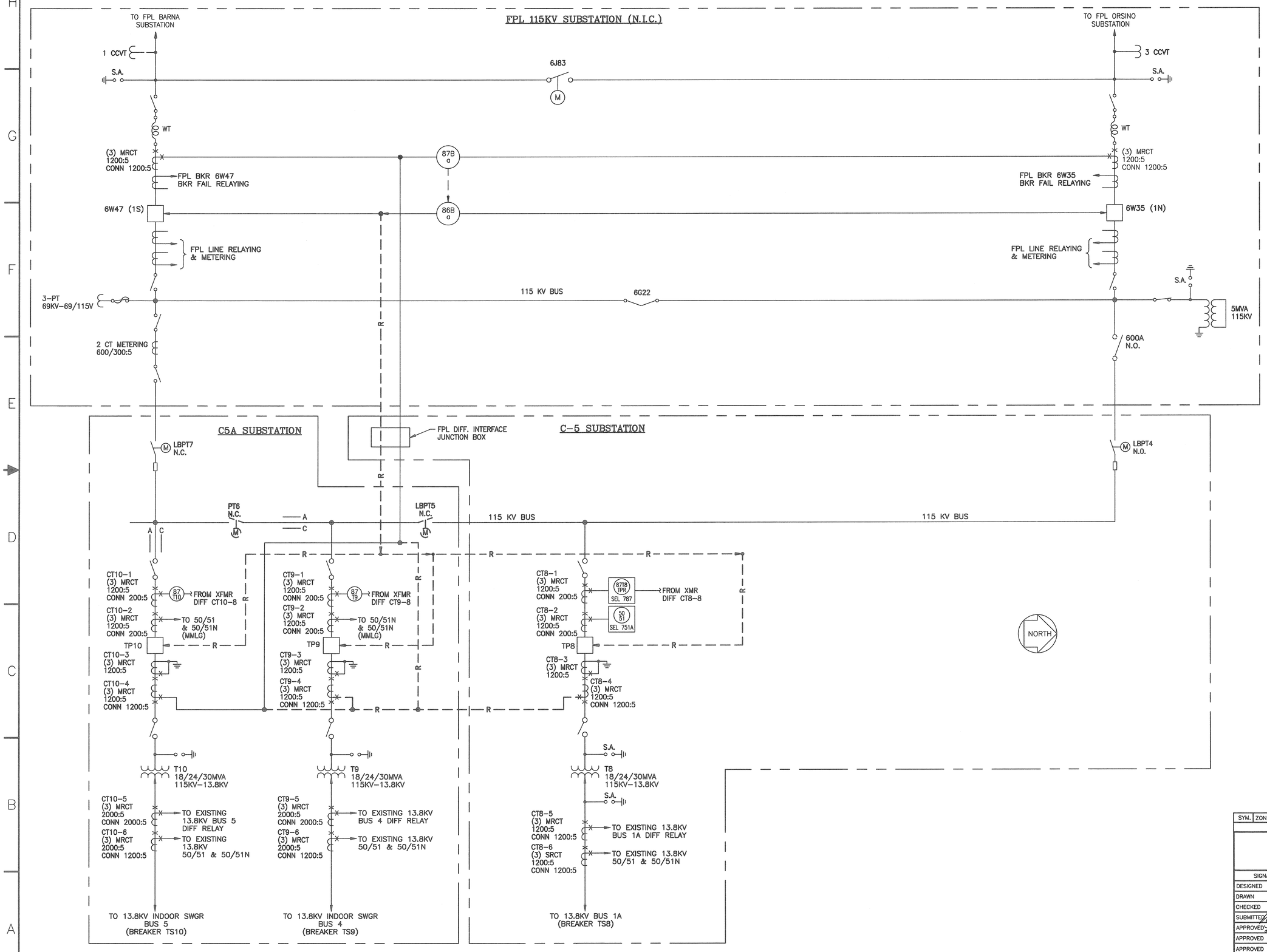

SPECIFIC NOTES

A. FOR LEGEND AND GENERAL NOTES, SEE DRAWING E1.

SYM.	ZONE	DESCRIPTION	DATE	APPROVED
		REVISIONS		

ENGINEER OF RECORD: LARRY JONES — PE LICENSE NO. 19837

FW&A Fred Wilson & Associates, Inc. Consulting Engineers
C.A. NO. 7188 • 904-398-8636
3970 Hendricks Avenue • Jacksonville, FL 32207

SIGNATURES		DATE
DESIGNED	M. YUDIN	4/09
DRAWN	M. YUDIN	4/09
CHECKED	L. JONES	4/09
SUBMITTED		9/24/09
APPROVED		9/24/09
APPROVED		
APPROVED		
APPROVED		
APPROVED		
APPROVED		

NATIONAL AERONAUTICS AND SPACE ADMINISTRATION
JOHN F. KENNEDY SPACE CENTER, NASA
KENNEDY SPACE CENTER, FLORIDA

MODIFY C-5 SUBSTATION FOR RING BUS CONFIGURATION

EXISTING 115KV BUS DIFFERENTIAL SINGLE LINE DIAGRAM

A/E FILE No. 0601\0601-25\0601-25.5
FILE: E6.DWG
THIS DRAWING PREPARED BY AutoCAD 2008

E6

FILE NO.	SIZE	DWG. NO.
	F	79K38551
PROJ. NO. PCN 98778		SHEET 8

NOTICE – WHEN GOVERNMENT DRAWINGS, SPECIFICATIONS, OR OTHER DATA ARE USED FOR ANY PURPOSE OTHER THAN IN CONNECTION WITH A DEFINITELY RELATED GOVERNMENT PROCUREMENT OPERATION, THE UNITED STATES GOVERNMENT THEREBY INCURS NO RESPONSIBILITY NOR ANY OBLIGATION WHATSOEVER; AND THE FACT THAT THE GOVERNMENT MAY HAVE FORMULATED, FURNISHED, OR IN ANY WAY SUPPLIED THE SAID DRAWINGS, SPECIFICATIONS OR OTHER DATA IS NOT TO BE REGARDED BY IMPLICATION OR OTHERWISE IN ANY MANNER LICENSING THE HOLDER OR ANY OTHER PERSON OR CORPORATION, OR CONVEYING ANY RIGHTS OR PERMISSION TO MANUFACTURE, USE, OR SELL ANY PATENTED INVENTION THAT MAY IN ANY WAY BE RELATED THERETO.

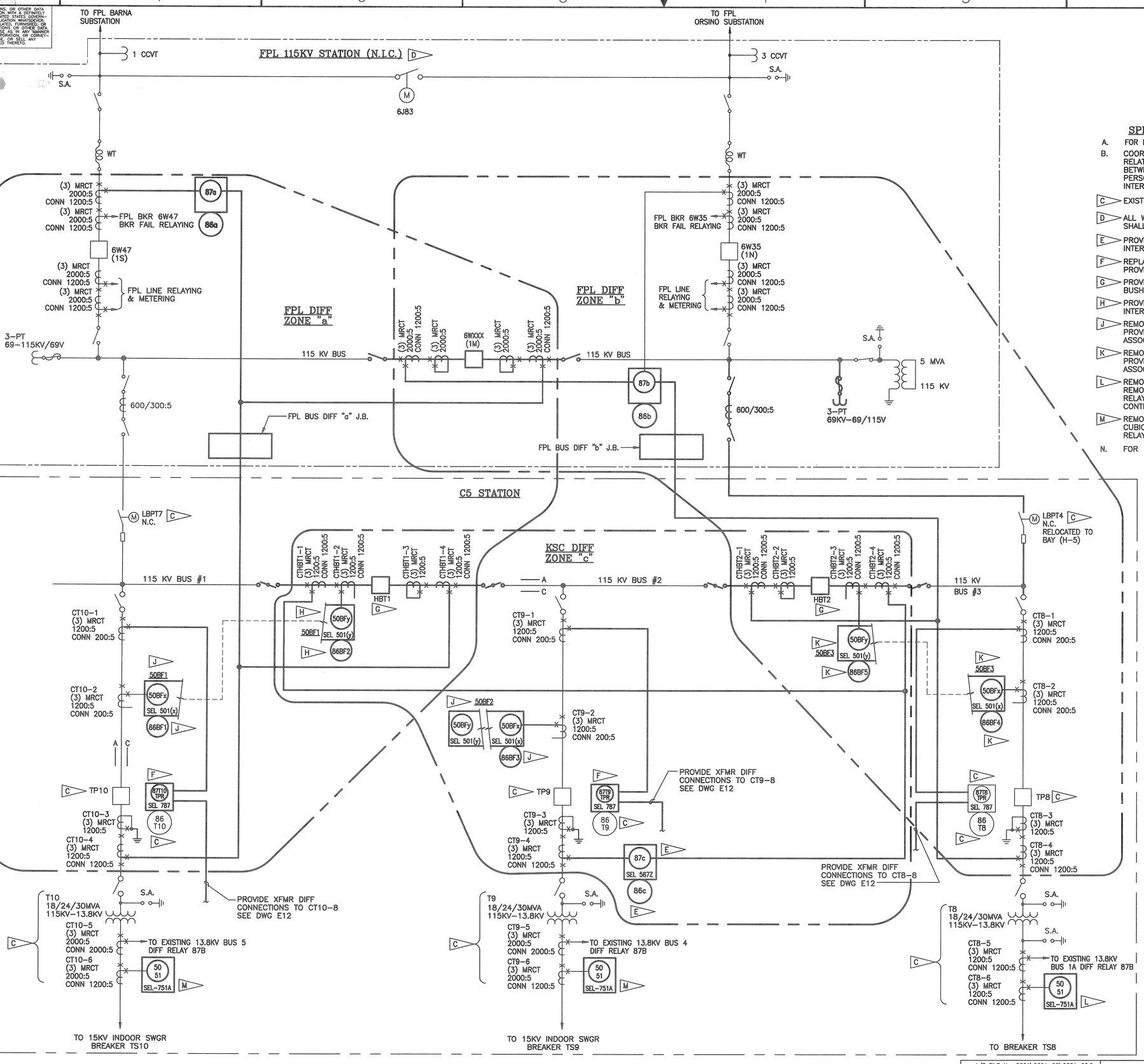

SPECIFIC NOTES

A. FOR LEGEND AND GENERAL NOTES, SEE DRAWING E1.

B. COORDINATE WITH NASA AND FPL IN THE SCHEDULING OF ALL WORK RELATED TO THE REMOVAL AND RECONNECTION OF INTERFACE CABLES BETWEEN THE FP&L SUBSTATION AND THE C-5/C-5A SUBSTATION. FP&L PERSONNEL WILL MAKE NEW TERMINATIONS AT THE DIFFERENTIAL AND INTERFACE JUNCTION BOXES.

C. EXISTING EQUIPMENT.

D. ALL WORK SHOWN WITHIN THE BOUNDARIES OF THE FPL SUBSTATION SHALL BE DONE BY FPL.

E. PROVIDE BUS DIFFERENTIAL AND LOCKOUT RELAYS AND ALL ASSOCIATED INTERCONNECTIONS.

F. REPLACE EXISTING TRANSFORMER DIFFERENTIAL RELAYS ON PANELS 1F AND 3F. PROVIDE SEL-787 DIFFERENTIAL RELAYS.

G. PROVIDE 115KV SF6 BREAKERS COMPLETE WITH 4 SETS MULTI-RATIO BUSHING CT'S.

H. PROVIDE BREAKER FAILURE AND LOCKOUT RELAYS AND ALL ASSOCIATED INTERCONNECTIONS.

J. REMOVE EXISTING KCCG OVERCURRENT RELAYS ON PANELS 1F AND 3F. PROVIDE SEL-501 BREAKER FAILURE RELAYS, LOCKOUT RELAYS AND ALL ASSOCIATED INTERCONNECTIONS.

K. REMOVE EXISTING SEL-751A OVERCURRENT RELAY ON PANEL 5. PROVIDE SEL-501 BREAKER FAILURE RELAY, LOCKOUT RELAY AND ALL ASSOCIATED INTERCONNECTIONS.

L. REMOVE EXISTING KCGG OVERCURRENT RELAY (51TS8) ON PANEL 5. REMOVE EXISTING INTERCONNECTIONS FROM THE SEL-751A OVERCURRENT RELAY (51TP8) AND RECONNECT TO BREAKER TS8 CURRENT, TRIP AND CONTROL CIRCUITS.

M. REMOVE EXISTING MMCO OVERCURRENT RELAYS ON 15KV SWITCHGEAR CUBICLES 1 AND 18 (TS9 AND TS10). PROVIDE SEL-751A OVERCURRENT RELAYS AND ALL ASSOCIATED INTERCONNECTIONS.

N. FOR 115KV BUS DIFFERENTIAL INTERFACE DETAILS, SEE DRAWING E9.

SYM.	ZONE	DESCRIPTION	DATE	APPROVED
		REVISIONS		

ENGINEER OF RECORD: LARRY JONES — PE LICENSE NO. 19837

Fred Wilson & Associates, Inc. Consulting Engineers
C.A. NO. 7188 • 904-398-8636
3970 Hendricks Avenue • Jacksonville, FL 32207

SIGNATURES		DATE
DESIGNED	M. YUDIN	4/09
DRAWN	M. YUDIN	4/09
CHECKED	L. JONES	4/09
SUBMITTED		9/24/09
APPROVED		9/24/09
APPROVED		
APPROVED		
APPROVED		
APPROVED		
APPROVED		

NATIONAL AERONAUTICS AND SPACE ADMINISTRATION
JOHN F. KENNEDY SPACE CENTER, NASA
KENNEDY SPACE CENTER, FLORIDA

MODIFY C-5 SUBSTATION FOR RING BUS CONFIGURATION

MODIFIED 115KV BUS DIFFERENTIAL SINGLE LINE DIAGRAM

A/E FILE No. 0601\0601-25\0601-25.5
FILE: E7.DWG
THIS DRAWING PREPARED BY AutoCAD 2008

E7

FILE NO. | SIZE F | DWG. NO. 79K38551
PROJ. NO. PCN 98778 | SHEET 9

NOTICE – WHEN GOVERNMENT DRAWINGS, SPECIFICATIONS, OR OTHER DATA ARE USED FOR ANY PURPOSE OTHER THAN IN CONNECTION WITH A DEFINITELY RELATED GOVERNMENT PROCUREMENT OPERATION, THE UNITED STATES GOVERNMENT THEREBY INCURS NO RESPONSIBILITY NOR ANY OBLIGATION WHATSOEVER; AND THE FACT THAT THE GOVERNMENT MAY HAVE FORMULATED, FURNISHED, OR IN ANY WAY SUPPLIED THE SAID DRAWINGS, SPECIFICATIONS, OR OTHER DATA IS NOT TO BE REGARDED BY IMPLICATION OR OTHERWISE AS IN ANY MANNER LICENSING THE HOLDER OR ANY OTHER PERSON OR CORPORATION, OR CONVEYING ANY RIGHTS OR PERMISSION TO MANUFACTURE, USE, OR SELL ANY PATENTED INVENTION THAT MAY IN ANY WAY BE RELATED THERETO.

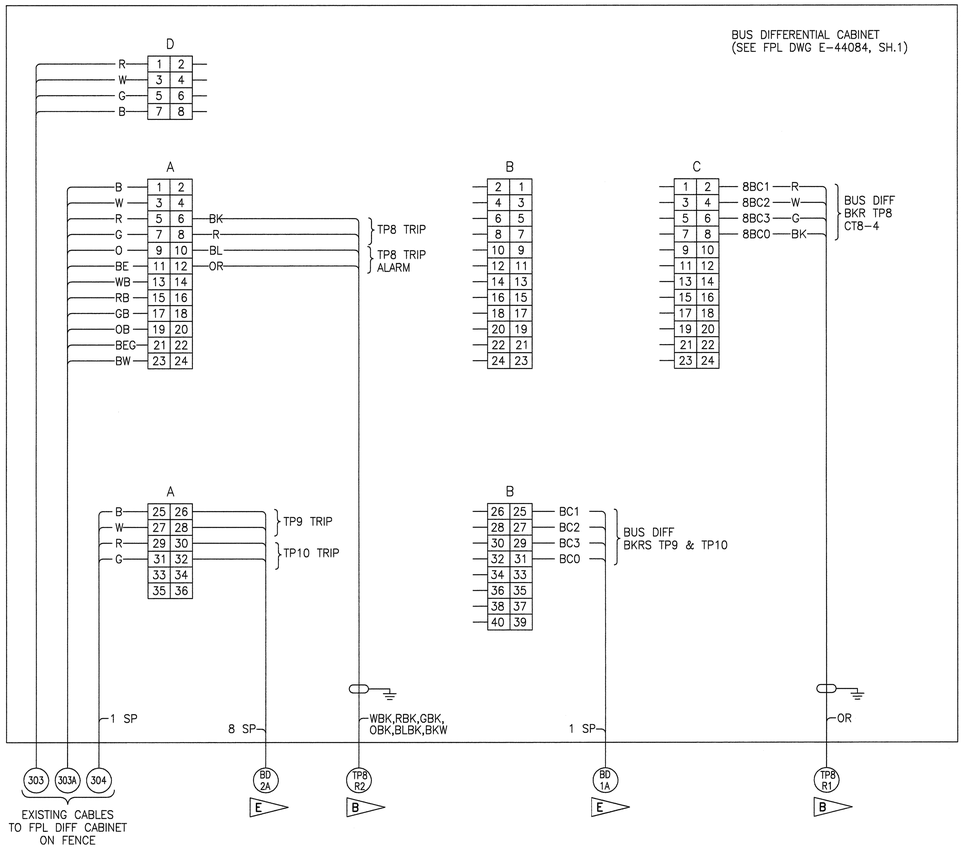

EXISTING C5 115KV BUS DIFFERENTIAL TERMINATIONS

EXISTING CONDUIT AND CABLE SCHEDULE D

	CABLE NUMBER	CONDUIT /DUCT NUMBER	FROM	TO	VIA	CONDUIT SIZE	CONDUIT MATL.	CABLE VOLT	CABLE COND	CABLE SIZE	FUNCTION	REMARKS
	– 115KV CIRCUIT BREAKER TP8 –											
C	TP8-AC	TP8A	CKT BKR TP8	AC YARD PANEL P1	EXISTING DUCT, PB-C1	EXISTING		600	5/C	#10 SH	AC SUPPLY	A.C. POWER CKT 32, 34
C	TP8-DC	TP8B	CKT BKR TP8	CONTROL PANEL 5	EXISTING DUCTS, PB-C3, PB-C5	EXISTING		600	5/C	#10 SH	DC SUPPLY	125V DC CONTROL PWR
C	TP8-C1		CKT BKR TP8	CONTROL PANEL 5				600	12/C	#12 SH	CONTROLS/ALARMS	
C	TP8-C2		CKT BKR TP8	CONTROL PANEL 5				600	12/C	#12 SH	CONTROLS/ALARMS	
C	TP8-C3		CKT BKR TP8	CONTROL PANEL 5				600	12/C	#12 SH	CONTROLS/ALARMS	
B	TP8-R1	TP8C	CKT BKR TP8	FPL BUS DIFF INTERFACE J.B.	EXISTING DUCTS, PB-C5	EXISTING		600	5/C	#10 SH	BUS DIFF "b"	CT8-4
B	TP8-R2		PANEL 5					600	12/C	#12 SH	CONTROLS/ALARMS	
C	TP8-R3		CKT BKR TP8	CONTROL PANEL 5	EXISTING DUCTS, PB-C3, PB-C5	EXISTING		600	5/C	#10 SH	RELAYING CT	
C	TP8-R4		CKT BKR TP8	CONTROL PANEL 5				600	5/C	#10 SH	RELAYING CT	XFMR T8 DIFF
C	TP8-R5		CKT BKR TP8	CONTROL PANEL 5				600	5/C	#10 SH	RELAYING CT	SPARE CT (CT8-3)
	– 15KV CIRCUIT BREAKER TS8 –											
C	TS8-AC	TS8A	CKT BKR TS8	AC YARD PANEL P1	EXISTING DUCT, PB-C1	EXISTING		600	5/C	#10 SH	AC SUPPLY	A.C. POWER CKT 15
C	TS8-DC	TS8B	CKT BKR TS8	CONTROL PANEL 5	EXISTING DUCTS, PB-C1	EXISTING		600	5/C	#10 SH	DC SUPPLY	125V DC CONTROL PWR
C	TS8-C1		CKT BKR TS8	CONTROL PANEL 5				600	12/C	#12 SH	CONTROLS/ALARMS	
C	TS8-C2		CKT BKR TS8	CONTROL PANEL 5				600	12/C	#12 SH	CONTROLS/ALARMS	
C	TS8-R1	TS8C	CKT BKR TS8	CONTROL PANEL 5	EXISTING DUCTS, PB-C1	EXISTING		600	5/C	#10 SH	RELAYING CT	13.8KV BUS DIFF.
C	TS8-R2		CKT BKR TS8	CONTROL PANEL 5				600	5/C	#10 SH	RELAYING CT	MMCO RELAY
C	TS8-R3		CKT BKR TS8	CONTROL PANEL 5				600	5/C	#10 SH	RELAYING CT	METERING
C	TS8-R4		CKT BKR TS8	CONTROL PANEL 5				600	5/C	#10 SH	RELAYING CT	XFMR T8 DIFF
C	188	–	CKT BKR TS8	TRANSFORMER T8	EXISTING DUCT	EXISTING		600	5/C	#10 SH	–	
	– 115KV TRANSFORMER T8 –											
C	T8-AC	T8A	TRANSFORMER T8	AC YARD PANEL P1	EXISTING DUCT, PB-C1	EXISTING		600	4/C	#10 SH	TRANSF FANS & TAP CHNGR	A.C. POWER CKT 14
C	T8-DC		TRANSFORMER T8	CONTROL PANEL 5	EXISTING DUCTS, PB-C1	EXISTING		600	4/C	#10 SH	DC SUPPLY	125V DC CONTROL PWR
C	T8-P1		TRANSFORMER T8	CONTROL PANEL 5				600	4/C	#10 SH	POTENTIAL SUPPLY	
C	T8-R1		TRANSFORMER T8	CONTROL PANEL 5				600	4/C	#10 SH	RELAYING	NEUTRAL CT
C	T8-A1	T8B	TRANSFORMER T8	CONTROL PANEL 5	EXISTING DUCTS, PB-C1	EXISTING		600	12/C	#12 SH	ALARM	TRANSF. MISC. ALARM
C	T8-A2		TRANSFORMER T8	CONTROL PANEL 5				600	12/C	#12 SH	ALARM	TRANSF. MISC. ALARM
C	T8-C1		TRANSFORMER T8	CONTROL PANEL 5				600	12/C	#12 SH	CONTROL	–
C	T8-C2		TRANSFORMER T8	CONTROL PANEL 5				600	12/C	#12 SH	CONTROL	TAP CHNGR. CONTROL & IND.
C	T8-C3		TRANSFORMER T8	CONTROL PANEL 5				600	12/C	#12 SH	CONTROL/ALARM	SUDDEN PRESS. TRIP & ALARM
C	T8-S3	T8C	TRANSFORMER T8	CONTROL PANEL 5	EXISTING DUCTS, PB-C1	EXISTING		–	–	–	–	SPARE CONDUIT
	– 115KV CIRCUIT BREAKERS TP9 & TP10 –											
E	BD-1A	BD1	CONTROL SWBD 4F	FPL BUS DIFFERENTIAL INTERFACE CABINET	EXISTING DUCTS & HANDHOLE	EXIST 3"C		600	5/C	#10 SH	BKRS TP9 & TP10 BUS DIFF CT'S	
E	BD-2A	BD2				EXIST 3"C		600	12/C	#12 SH	BKRS TP9 & TP10 TRIP CKTS	

SPECIFIC NOTES

A. FOR LEGEND AND GENERAL NOTES, SEE DRAWING E1.

B REMOVE MULTICONDUCTOR CABLES BACK TO BREAKER TP8.

C MULTICONDUCTOR CABLES TO REMAIN.

D FOR ADDITIONAL CABLING, SEE MODIFIED CABLE AND CONDUIT SCHEDULE, DRAWING E9.

E REMOVE MULTICONDUCTOR CABLES BACK TO CONTROL SWITCHBOARD 4F.

SYM.	ZONE	DESCRIPTION	DATE	APPROVED

REVISIONS

ENGINEER OF RECORD: LARRY JONES — PE LICENSE NO. 19837

Fred Wilson & Associates, Inc. Consulting Engineers
C.A. NO. 7188 • 904-398-8636
3970 Hendricks Avenue • Jacksonville, FL 32207

SIGNATURES		DATE
DESIGNED	M. YUDIN	4/09
DRAWN	M. YUDIN	4/09
CHECKED	L. JONES	4/09
SUBMITTED		9/24/09
APPROVED		9/24/09
APPROVED		
APPROVED		
APPROVED		
APPROVED		
APPROVED		

NATIONAL AERONAUTICS AND SPACE ADMINISTRATION
JOHN F. KENNEDY SPACE CENTER, NASA
KENNEDY SPACE CENTER, FLORIDA

MODIFY C-5 SUBSTATION FOR RING BUS CONFIGURATION

EXISTING BUS DIFFERENTIAL CONNECTION DETAILS, AND CABLE & CONDUIT SCHEDULE

FILE NO. | SIZE F | DWG. NO. 79K38551

PROJ. NO. PCN 98778 | SHEET 10

A/E FILE No. 0601\0601-25\0601-25.5
FILE: E8.DWG
THIS DRAWING PREPARED BY AutoCAD 2008

E8

NOTICE – WHEN GOVERNMENT DRAWINGS, SPECIFICATIONS, OR OTHER DATA ARE USED FOR ANY PURPOSE OTHER THAN IN CONNECTION WITH A DEFINITELY RELATED GOVERNMENT PROCUREMENT OPERATION, THE UNITED STATES GOVERNMENT THEREBY INCURS NO RESPONSIBILITY NOR ANY OBLIGATION WHATSOEVER; AND THE FACT THAT THE GOVERNMENT MAY HAVE FORMULATED, FURNISHED, OR IN ANY WAY SUPPLIED THE SAID DRAWINGS, SPECIFICATIONS OR OTHER DATA IS NOT TO BE REGARDED BY IMPLICATION OR OTHERWISE IN ANY MANNER LICENSING THE HOLDER OR ANY OTHER PERSON OR CORPORATION, OR CONVEYING ANY RIGHTS OR PERMISSION TO MANUFACTURE, USE, OR SELL ANY PATENTED INVENTION THAT MAY IN ANY WAY BE RELATED THERETO.

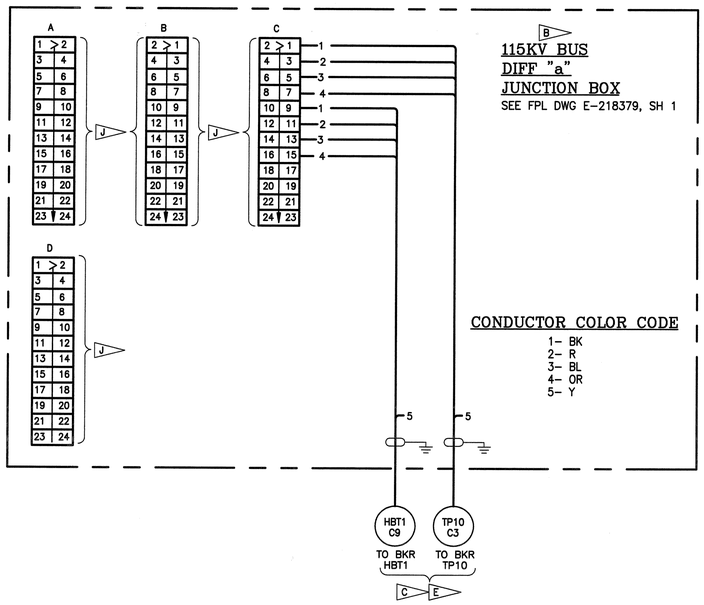

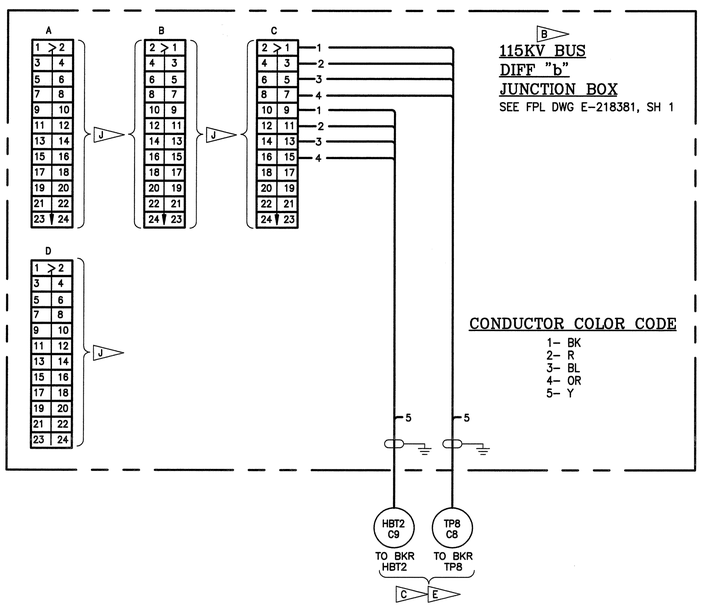

C-5/C-5A SUBSTATION MODIFIED CONDUIT AND CABLE SCHEDULE

CABLE NUMBER	CONDUIT /DUCT NUMBER	FROM	TO	VIA	CONDUIT SIZE	CONDUIT MATL.	CABLE VOLT	CABLE COND	CABLE SIZE	FUNCTION	REMARKS
– 115KV CIRCUIT BREAKERS–BREAKER FAILURE SYSTEM –											
BF–C1	BF1	CONTROL PNLS 1F & 2F	FPL STATION COMMON INTERFACE CABINET	EXISTING DUCTS, PB–C3, PB–C5	2"	PVC	600V	12/C	#12 SH	BKR FAILURE TRIPS & LOCKOUTS	FPL BKRS 6WXXX (1M) & 6W47 (1S)
BF–C2							600V	12/C	#12 SH		
BF–C3	BF2	CONTROL PNLS 4F & 5	FPL STATION COMMON INTERFACE CABINET		2"	PVC	600V	12/C	#12 SH	BKR FAILURE TRIPS & LOCKOUTS	FPL BKRS 6WXXX (1M) & 6W35 (1N)
BF–C4							600V	12/C	#12 SH		
– 115KV CIRCUIT BREAKER TP8											
TP8–AC	TP8A	POWER PANEL P1	CKT BKR TP8	EXISTING DUCTS, PB–C1	2"	PVC	600V	5/C	#10 SH	A.C. SUPPLY	
TP8–DC	TP8B	CKT BKR TP8	CONTROL PNL 5	EXISTING DUCTS, PB–C3, PB–C5	2"	PVC	600V	5/C	#10 SH	D.C. SUPPLY	
TP8–C1							600V	12/C	#12 SH	CONTROLS/ALARMS	
TP8–C2							600V	12/C	#12 SH	CONTROLS/ALARMS	
TP8–C3	TP8C	CKT BKR TP8	CONTROL PNL 5	EXISTING DUCTS, PB–C3, PB–C5	2"	PVC	600V	12/C	#12 SH	CONTROLS/ALARMS	
TP8–C4							600V	12/C	#12 SH	CONTROLS/ALARMS	
TP8–C5							600V	5/C	#10 SH	BKR O.C. (CTB–2)	BREAKER FAILURE SYSTEM
TP8–C6	TP8D	CONTROL PNL 5/ CKT BKR TP8	FPL DIFF "b" & STATION COMMON INTERFACE J.B.'S	EXISTING & NEW DUCTS, PB–C5	2"	PVC	600V	12/C	#12 SH	CONTROLS/ALARMS	FPL INTERLOCKS & DIFF (CABLE TP8–C7 WAS TP8–R2, CABLE TP8–C8 WAS TP8–R1)
TP8–C7							600V	12/C	#12 SH	CONTROLS/ALARMS	
TP8–C8							600V	5/C	#10 SH	115KV BUS DIFF "b"	
– 115KV CIRCUIT BREAKER TP10 – G											
TP10–C1	BD3A	CONTROL PNL 1F/ CKT BKR TP10	FPL DIFF "a" & STATION COMMON INTERFACE J.B.'S	EXISTING & NEW DUCTS	2"	PVC	600V	12/C	#12 SH	CONTROLS/ALARMS	FPL INTERLOCKS G
TP10–C2							600V	12/C	#12 SH	CONTROLS/ALARMS	
TP10–C3	BD4A	CKT BKR TP10		EXISTING & NEW DUCTS, EXISTING HANDHOLE	2"		600V	5/C	#10 SH	115KV BUS DIFF "a"	G
– 115KV CIRCUIT BREAKER HBT1 –											
HBT1–AC	HBT1A	CONTROL PNL 2F	CKT BKR HBT1	EXISTING DUCTS	3"	PVC	600V	5/C	#10 SH	A.C. SUPPLY	
HBT1–DC							600V	5/C	#10 SH	D.C. SUPPLY	
HBT1–C1							600V	12/C	#12 SH	CONTROLS/ALARMS	
HBT1–C2							600V	12/C	#12 SH	CONTROLS/ALARMS	
HBT1–C3	HBT1B	CONTROL PNL 2F	CKT BKR HBT1	EXISTING DUCTS	3"	PVC	600V	12/C	#12 SH	CONTROLS/ALARMS	
HBT1–C4							600V	12/C	#12 SH	CONTROLS/ALARMS	
HBT1–C5							600V	5/C	#10 SH	BKR O.C. (CTHBT1–2)	BREAKER FAILURE SYSTEM
HBT1–C6		CONTROL PNL 2F	STATION COMMON JB	EXISTING DUCTS			600V	12/C	#10 SH	CONTROL/ALARMS	FPL INTERLOCKS
HBT1–C7	BD3, BD4	CONTROL PNL 2F/ CKT BKR HBT1	FPL DIFF "a" & STATION COMMON INTERFACE J.B.'S	EXISTING & NEW DUCTS, EXISTING HANDHOLE	2"	PVC	600V	12/C	#12 SH	CONTROLS/ALARMS	FPL INTERLOCKS
HBT1–C8							600V	12/C	#12 SH	CONTROLS/ALARMS	
HBT1–C9	BD3, BD4	CKT BKR HBT1		EXISTING & NEW DUCTS, EXISTING HANDHOLE	2"	PVC	600V	5/C	#10 SH	115KV BUS DIFF "a"	
HBT1–C10							600V	12/C	#12 SH	CONTROLS/ALARMS	FPL INTERLOCKS
– 115KV CIRCUIT BREAKER HBT2 –											
HBT2–AC	HBT2A	CONTROL PNL 4F	CKT BKR HBT2	EXISTING DUCTS	3"	PVC	600V	5/C	#10 SH	A.C. SUPPLY	
HBT2–DC							600V	5/C	#10 SH	D.C. SUPPLY	
HBT2–C1							600V	12/C	#12 SH	CONTROLS/ALARMS	
HBT2–C2							600V	12/C	#12 SH	CONTROLS/ALARMS	
HBT2–C3	HBT2B	CONTROL PNL 4F	CKT BKR HBT2	EXISTING DUCTS	3"	PVC	600V	12/C	#12 SH	CONTROLS/ALARMS	
HBT2–C4							600V	12/C	#12 SH	CONTROLS/ALARMS	
HBT2–C5							600V	5/C	#10 SH	BKR O.C. (CTHBT2–3)	BREAKER FAILURE SYSTEM
HBT2–C6		CONTROL PNL 4F	STATION COMMON JB	EXISTING DUCTS			600V	12/C	#10 SH	CONTROL/ALARMS	FPL INTERLOCKS
HBT2–C7	BD1, BD2	CONTROL PNL 4F/ CKT BKR HBT2	FPL DIFF "b" & STATION COMMON INTERFACE J.B.'S	EXISTING & NEW DUCTS, EXISTING HANDHOLE	2"	PVC	600V	12/C	#12 SH	CONTROLS/ALARMS	FPL INTERLOCKS
HBT2–C8							600V	12/C	#12 SH	CONTROLS/ALARMS	
HBT2–C9	BD1, BD2	CKT BKR HBT2		EXISTING & NEW DUCTS, EXISTING HANDHOLE	2"	PVC	600V	5/C	#10 SH	115KV BUS DIFF "b"	
HBT2–C10							600V	12/C	#12 SH	CONTROLS/ALARMS	FPL INTERLOCKS
– 115KV M.O. LOADBREAK SWITCH LBT4 –											
SW4–AC	SW4A	SWITCH LBPT4	EXISTING CONT'L SWBD 15A	EXISTING & NEW 3" CONDUITS VIA PB–C3 & PB–C5	2"	PVC GRS	600V	5/C	#10 SH	AC SUPPLY	SEE FLAG NOTE U DWG E26
SW4–DC		SWITCH LBPT4	EXISTING CONT'L SWBD 15A				600V	5/C	#10 SH	DC SUPPLY	
SW4–C1		SWITCH LBPT4	EXISTING CONT'L SWBD 15A				600V	12/C	#12 SH	CONTROL	
–	SW4B	PULL BOX PB–C3	SWBD 15A	EXISTING	2"	PVC					
KYZ–1	SW4C	PULL BOX PB–C5	COMM RACK1527 IN C5 CONT BLDG	EXISTING	2"	PVC	–	3/C	#14 SH	KYZ PULSE (CDT WAS SPARE)	FINAL CONNECTIONS IN FIC 1527 RACK BY OTHERS
KYZ–2											
– PRNMARY METERING –											
KYZ–1	–	STA COMMON FPL INTERFACE J.B.	PB–C5	EXISTING DUCTS	–	–	–	3/C	#14 SH	KYZ PULSE	
KYZ–2											

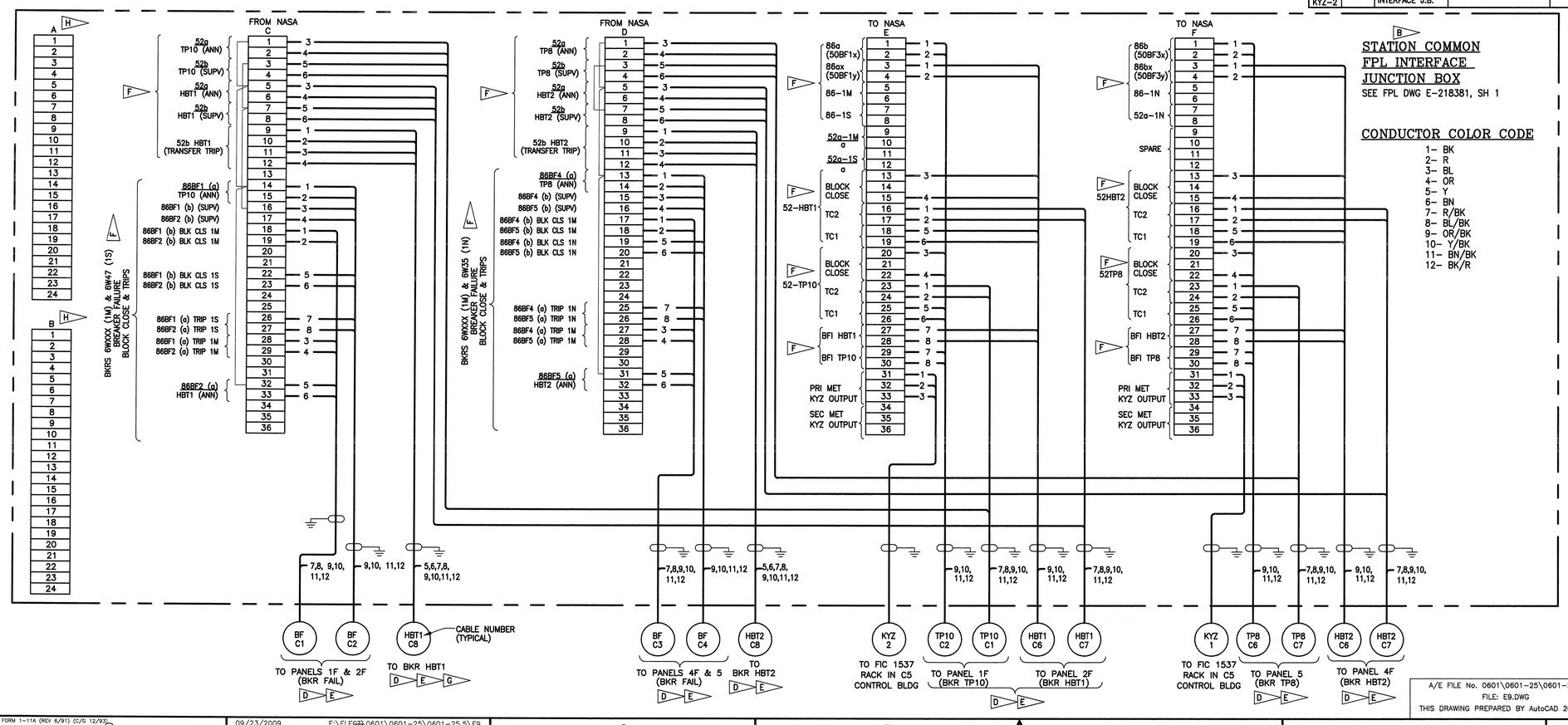

SPECIFIC NOTES

A. FOR LEGEND AND GENERAL NOTES, SEE DRAWING E1.

B. DIFFERENTIAL AND INTERFACE JUNCTION BOXES, TERMINAL BLOCKS AND CONNECTIONS SHALL BE PROVIDED BY FPL.

C. PROVIDE 5/C #10 CABLES WITH OVERALL SHIELD FROM 115KV SF6 BREAKERS TP8, TP10, HBT1 AND HBT2. TAG NEW CABLES USING CABLE NUMBERS AS INDICATED. COORDINATE FINAL CONNECTIONS WITH FPL.

D. TAG NEW CABLES USING CABLE NUMBERS AS INDICATED. COORDINATE ROUTING AND FINAL CONNECTIONS WITH FPL.

E. MULTICONDUCTOR CABLES SHALL CONFORM TO COLOR CODE ICEA METHOD 1, TABLE K–2.

F. CONDUCTORS FURNISHED BY FPL. COORDINATE FINAL CONNECTIONS WITH FPL.

G. PROVIDE CABLES INDICATED. EXISTING A.C. & D.C. POWER AND CONTROL CABLES TO BREAKER TP10 ARE TO REMAIN AND NOT BE MODIFIED.

H. TERMINAL BLOCKS "A" AND "B" ARE RESERVED FOR INTER–TIE PANELS INTERCONNECTIONS BY FPL.

J. CABLE AND CONNECTIONS BY FPL.

K. THE CONTRACTOR SHALL COORDINATE WITH NASA AND FPL FOR THE SCHEDULING OF ALL WORK RELATED TO THE REMOVAL AND RECONNECTION OF INTERFACE CABLES BETWEEN THE FPL SUBSTATION AND THE C–5/C–5A SUBSTATION. FPL PERSONNEL WILL MAKE THE NEW TERMINATIONS AT THE DIFFERENTIAL INTERFACE JUNCTION CABINETS.

L. CONTROL & CT CABLES TP8–AC, TP8–DC, TP8–C1, C2 AND C3 SHALL REMAIN. FOR ADDITIONAL CONTROL AND CT CABLES, SEE EXISTING CABLE AND CONDUIT SCHEDULE, DRAWING E8.

SYM.	ZONE	DESCRIPTION	DATE	APPROVED
		REVISIONS		

ENGINEER OF RECORD: LARRY JONES — PE LICENSE NO. 19837

Fred Wilson & Associates, Inc.
Consulting Engineers
C.A. NO. 7188 • 904-398-8636
3970 Hendricks Avenue • Jacksonville, FL 32207

SIGNATURES		DATE
DESIGNED	M. YUDIN	4/04
DRAWN	B. GEMMELL	4/09
CHECKED	L. JONES	4/09
SUBMITTED		9/24/09
APPROVED		9/24/09
APPROVED		
APPROVED		
APPROVED		
APPROVED		
APPROVED		

NATIONAL AERONAUTICS AND SPACE ADMINISTRATION
JOHN F. KENNEDY SPACE CENTER, NASA
KENNEDY SPACE CENTER, FLORIDA

MODIFY C–5 SUBSTATION FOR RING BUS CONFIGURATION

MODIFIED BUS DIFFERENTIAL CONNECTION DETAILS AND CABLE & CONDUIT SCHEDULE

FILE NO. | SIZE F | DWG. NO. 79K38551

PROJ. NO. PCN 98778 | SHEET 11

A/E FILE No. 0601\0601–25\0601–25.5
FILE: E9.DWG
THIS DRAWING PREPARED BY AutoCAD 2008

E9

NOTICE – WHEN GOVERNMENT DRAWINGS, SPECIFICATIONS, OR OTHER DATA ARE USED FOR ANY PURPOSE OTHER THAN IN CONNECTION WITH A DEFINITELY RELATED GOVERNMENT PROCUREMENT OPERATION, THE UNITED STATES GOVERNMENT THEREBY INCURS NO RESPONSIBILITY NOR ANY OBLIGATION WHATSOEVER, AND THE FACT THAT THE GOVERNMENT MAY HAVE FORMULATED, FURNISHED, OR IN ANY WAY SUPPLIED THE SAID DRAWINGS, SPECIFICATIONS OR OTHER DATA IS NOT TO BE REGARDED BY IMPLICATION OR OTHERWISE AS IN ANY MANNER LICENSING THE HOLDER OR ANY OTHER PERSON OR CORPORATION, OR CONVEYING ANY RIGHTS OR PERMISSION TO MANUFACTURE, USE, OR SELL ANY PATENTED INVENTION THAT MAY IN ANY WAY BE RELATED THERETO.

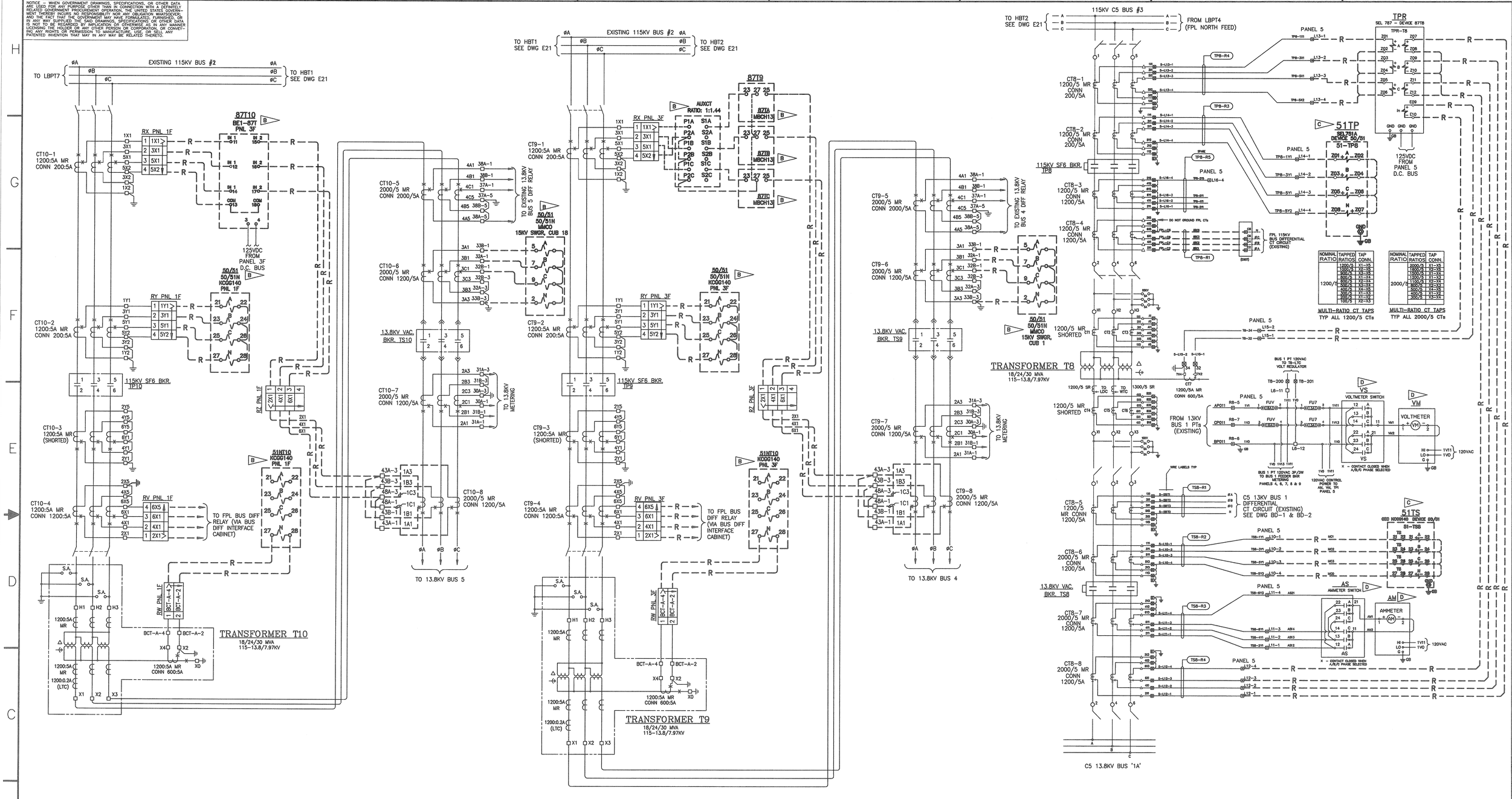

REFERENCE DRAWINGS

WIRING SCHEMATIC & CONNECTION DRAWINGS ..... IET DRAWING IET-9.
INDOOR VACCLAD SWGR CONNECTION DIAGRAM ..... WESTINGHOUSE DRAWING 7072H01
INDOOR VACCLAD SWGR CONNECTION DIAGRAM ..... WESTINGHOUSE DRAWING 7072H18
CONTROL PANEL 5 A.C. ELEMENTARY DIAGRAM ..... SELAH/NEWKIRK DRAWING 84233-AC-1

SPECIFIC NOTES:

A. FOR LEGEND AND GENERAL NOTES, SEE DRAWING E1.

B ▷ REMOVE EQUIPMENT AND CONNECTIONS.

C ▷ REMOVE EXISTING KCGG OVERCURRENT RELAY (51TS) ON PANEL 5. REMOVE EXISTING INTERCONNECTIONS FROM THE SEL-751A OVERCURRENT RELAY (51TP) AND RECONNECT TO BREAKER TS8 CURRENT, TRIP AND CONTROL CIRCUITS.

D ▷ EXISTING EQUIPMENT.

E. REFERENCE DRAWINGS WILL BE PROVIDED TO THE CONTRACTOR AFTER CONTRACT AWARD.

SYM.	ZONE	DESCRIPTION	DATE	APPROVED
		REVISIONS		

ENGINEER OF RECORD: LARRY JONES — PE LICENSE NO. 19837

Fred Wilson & Associates, Inc.
Consulting Engineers
C.A. NO. 7188 • 904-398-8636
3970 Hendricks Avenue • Jacksonville, FL 32207

SIGNATURES		DATE
DESIGNED	M. YUDIN	4/09
DRAWN	C. GATES	4/09
CHECKED	L. JONES	4/09
SUBMITTED		9/24/09
APPROVED		9/24/09
APPROVED		
APPROVED		
APPROVED		
APPROVED		
APPROVED		

NATIONAL AERONAUTICS AND SPACE ADMINISTRATION
JOHN F. KENNEDY SPACE CENTER, NASA
KENNEDY SPACE CENTER, FLORIDA

MODIFY C-5 SUBSTATION FOR RING BUS CONFIGURATION

EXISTING 115kV BREAKERS TP8, TP9 & TP10 AND 15KV BREAKERS TS8 TS9 & TS10 – A.C. SCHEMATIC DIAGRAMS

A/E FILE No. 0601\0601-25\0601-25.5
FILE: E10.DWG
THIS DRAWING PREPARED BY AutoCAD 2008

E10

FILE NO.	SIZE	DWG. NO.	
	F	79K38551	
PROJ. NO. PCN 98778			SHEET 12

NOTICE – WHEN GOVERNMENT DRAWINGS, SPECIFICATIONS, OR OTHER DATA ARE USED FOR ANY PURPOSE OTHER THAN IN CONNECTION WITH A DEFINITELY RELATED GOVERNMENT PROCUREMENT OPERATION, THE UNITED STATES GOVERNMENT THEREBY INCURS NO RESPONSIBILITY NOR ANY OBLIGATION WHATSOEVER; AND THE FACT THAT THE GOVERNMENT MAY HAVE FORMULATED, FURNISHED, OR IN ANY WAY SUPPLIED THE SAID DRAWINGS, SPECIFICATIONS OR OTHER DATA IS NOT TO BE REGARDED BY IMPLICATION OR OTHERWISE IN ANY MANNER LICENSING THE HOLDER OR ANY OTHER PERSON OR CORPORATION, OR CONVEYING ANY RIGHTS OR PERMISSION TO MANUFACTURE, USE, OR SELL ANY PATENTED INVENTION THAT MAY IN ANY WAY BE RELATED THERETO.

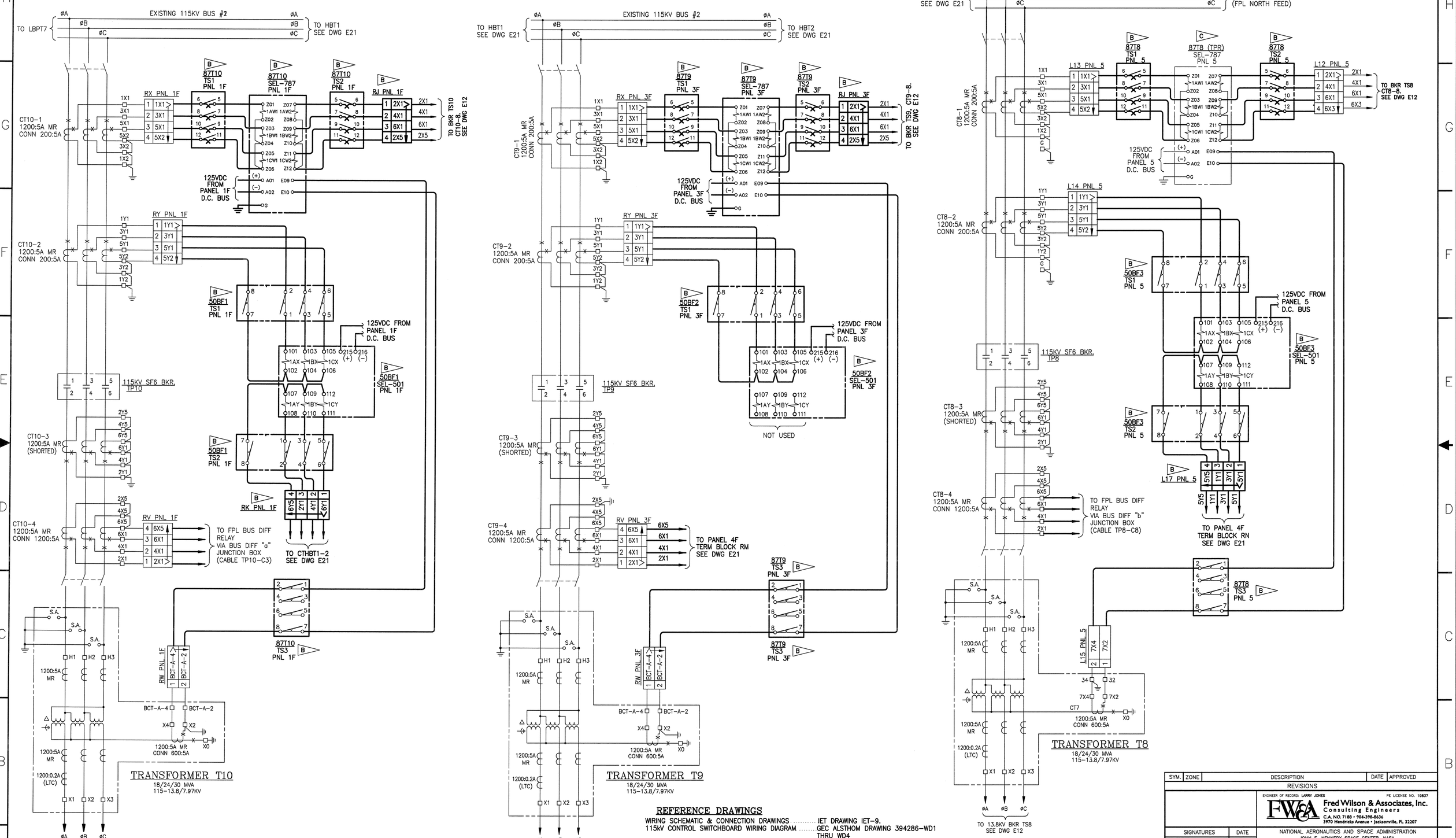

REFERENCE DRAWINGS

WIRING SCHEMATIC & CONNECTION DRAWINGS ..... IET DRAWING IET-9.
115kV CONTROL SWITCHBOARD WIRING DIAGRAM ..... GEC ALSTHOM DRAWING 394286-WD1 THRU WD4
CONTROL PANEL 5 MODIFICATIONS & WIRING DIAGRAMS ..... SELAH/NEWKIRK DRAWING 84233, SHEETS 1 THROUGH 18.

SPECIFIC NOTES:

A. FOR LEGEND AND GENERAL NOTES, SEE DRAWING E1.

B. EQUIPMENT AND CONNECTIONS SHOWN IN BOLD ARE NEW AND ARE TO BE PROVIDED BY THE CONTRACTOR.

C. EXISTING EQUIPMENT.

D. REFERENCE DRAWINGS WILL BE PROVIDED TO THE CONTRACTOR AFTER CONTRACT AWARD.

SYM.	ZONE	DESCRIPTION	DATE	APPROVED

REVISIONS

ENGINEER OF RECORD: LARRY JONES — PE LICENSE NO. 19837

Fred Wilson & Associates, Inc. Consulting Engineers
C.A. NO. 7188 • 904-398-8436
3970 Hendricks Avenue • Jacksonville, FL 32207

SIGNATURES		DATE
DESIGNED	M. YUDIN	4/09
DRAWN	M. YUDIN	4/09
CHECKED	L. JONES	4/09
SUBMITTED		9/24/09
APPROVED		9/24/09
APPROVED		
APPROVED		
APPROVED		
APPROVED		
APPROVED		

NATIONAL AERONAUTICS AND SPACE ADMINISTRATION
JOHN F. KENNEDY SPACE CENTER, NASA
KENNEDY SPACE CENTER, FLORIDA

MODIFY C-5 SUBSTATION FOR RING BUS CONFIGURATION

MODIFIED 115KV BREAKERS TP8, TP9 AND TP10 A.C. SCHEMATIC DIAGRAMS

FILE NO. | SIZE F | DWG. NO. 79K38551

PROJ. NO. PCN 98778 | SHEET 13

A/E FILE No. 0601\0601-25\0601-25.5
FILE: E11.DWG
THIS DRAWING PREPARED BY AutoCAD 2008

E11

NOTICE – WHEN GOVERNMENT DRAWINGS, SPECIFICATIONS, OR OTHER DATA ARE USED FOR ANY PURPOSE OTHER THAN IN CONNECTION WITH A DEFINITELY RELATED GOVERNMENT PROCUREMENT OPERATION, THE UNITED STATES GOVERNMENT THEREBY INCURS NO RESPONSIBILITY NOR ANY OBLIGATION WHATSOEVER; AND THE FACT THAT THE GOVERNMENT MAY HAVE FORMULATED, FURNISHED, OR IN ANY WAY SUPPLIED THE SAID DRAWINGS, SPECIFICATIONS OR OTHER DATA IS NOT TO BE REGARDED BY IMPLICATION OR OTHERWISE IN ANY MANNER LICENSING THE HOLDER OR ANY OTHER PERSON OR CORPORATION, OR CONVEYING ANY RIGHTS OR PERMISSION TO MANUFACTURE, USE, OR SELL ANY PATENTED INVENTION THAT MAY IN ANY WAY BE RELATED THERETO.

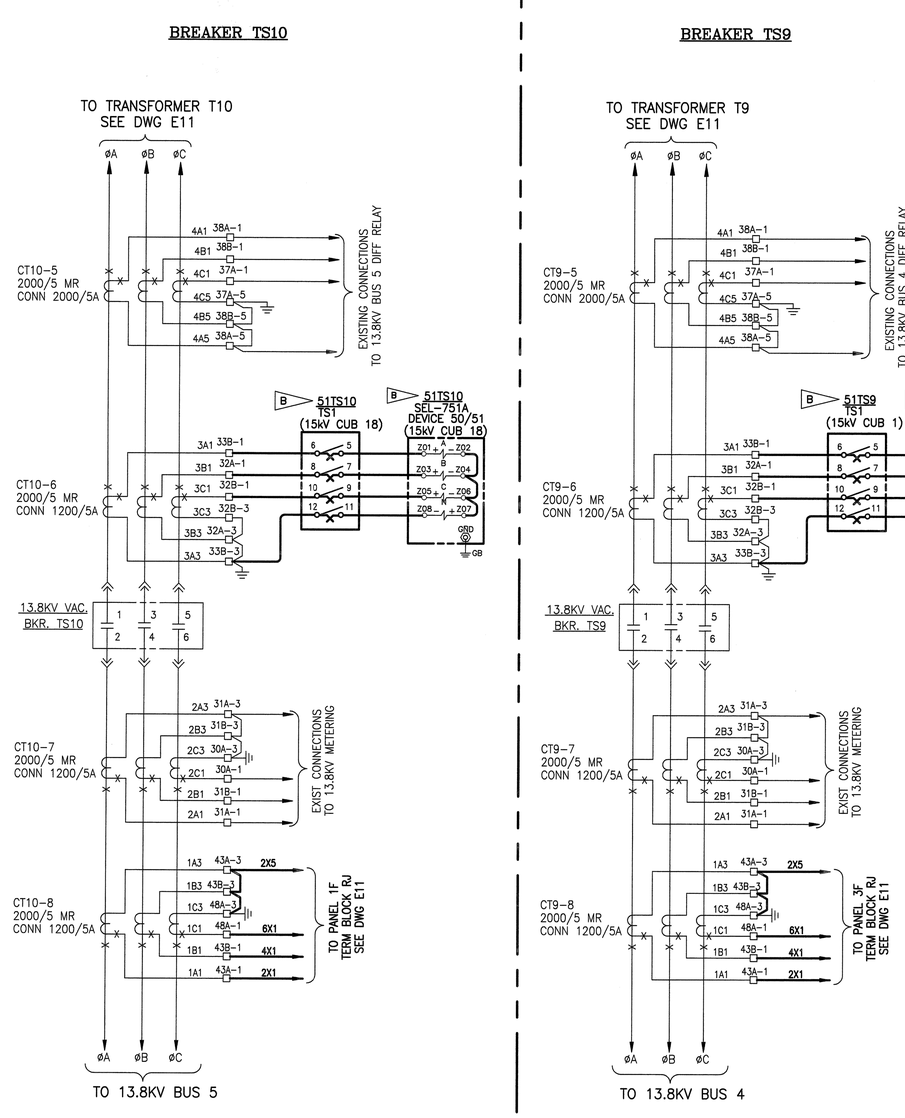

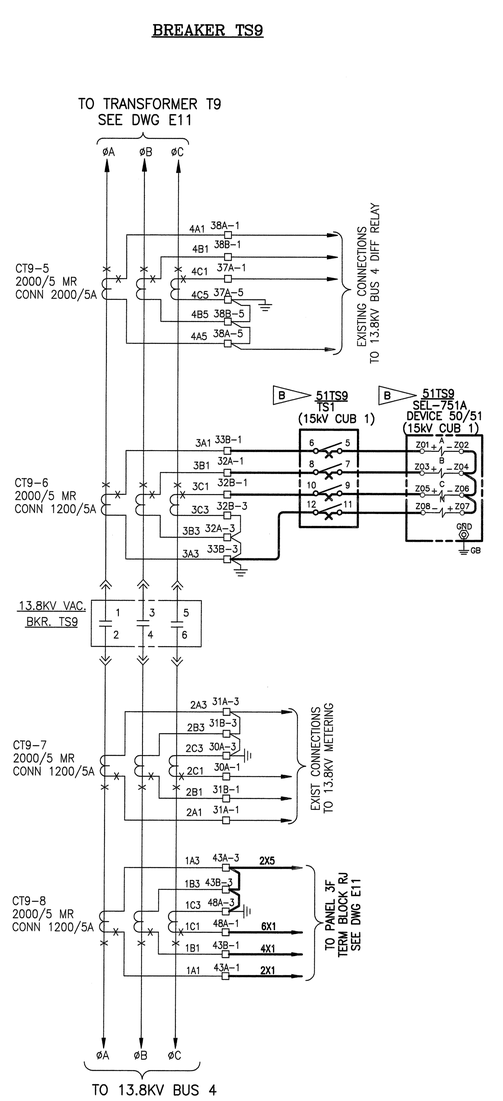

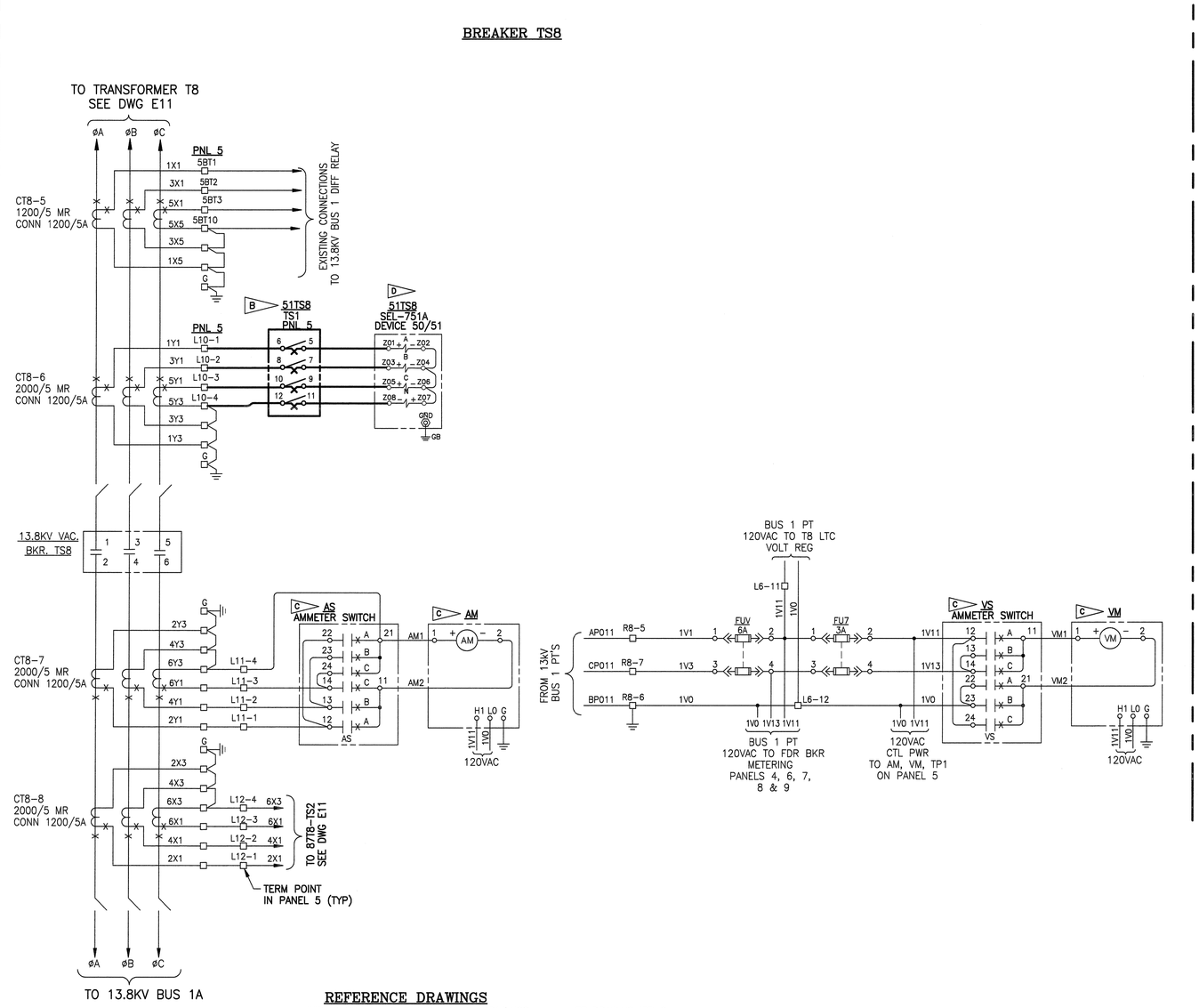

REFERENCE DRAWINGS

WIRING SCHEMATIC & CONNECTION DRAWINGS ..... JET DRAWING JET-9.
INDOOR VACCLAD SWGR CONNECTION DIAGRAM ..... WESTINGHOUSE DRAWING 7072H01
INDOOR VACCLAD SWGR CONNECTION DIAGRAM ..... WESTINGHOUSE DRAWING 7072H18
CONTROL PANEL 5 MODIFICATIONS & WIRING DIAGRAMS ..... SELAH/NEWKIRK DRAWING 84233, SHEETS 1 THROUGH 18.

SPECIFIC NOTES:

A. FOR LEGEND AND GENERAL NOTES, SEE DRAWING E1.

B ▷ EQUIPMENT AND CONNECTIONS SHOWN IN BOLD ARE NEW AND ARE TO BE PROVIDED BY THE CONTRACTOR.

C ▷ EXISTING EQUIPMENT.

D ▷ DISCONNECT THE SEL-751A OVERCURRENT RELAY (51TP8) FROM CT8-2 BREAKER TP8) AND AND RECONNECT TO CT8-6 (BREAKER TS8) CURRENT, TRIP AND CONTROL CIRCUITS.

E. REFERENCE DRAWINGS WILL BE PROVIDED TO THE CONTRACTOR AFTER CONTRACT AWARD.

SYM.	ZONE	DESCRIPTION	DATE	APPROVED
		REVISIONS		

ENGINEER OF RECORD: LARRY JONES — P.E. LICENSE NO. 19837

Fred Wilson & Associates, Inc.
Consulting Engineers
C.A. NO. 7188 • 904-398-8636
3970 Hendricks Avenue • Jacksonville, FL 32207

SIGNATURES		DATE
DESIGNED	M. YUDIN	4/09
DRAWN	M. YUDIN	4/09
CHECKED	L. JONES	4/09
SUBMITTED		9/24/09
APPROVED		9/24/09
APPROVED		
APPROVED		
APPROVED		
APPROVED		
APPROVED		

NATIONAL AERONAUTICS AND SPACE ADMINISTRATION
JOHN F. KENNEDY SPACE CENTER, NASA
KENNEDY SPACE CENTER, FLORIDA

MODIFY C-5 SUBSTATION FOR RING BUS CONFIGURATION

MODIFIED 15KV BREAKERS TS8, TS9 AND TS10 A.C. SCHEMATIC DIAGRAMS

A/E FILE No. 0601\0601-25\0601-25.5
FILE: E12.DWG
THIS DRAWING PREPARED BY AutoCAD 2008

E12

FILE NO. | SIZE F | DWG. NO. 79K38551

PROJ. NO. PCN 98778 | SHEET 14

NOTICE – WHEN GOVERNMENT DRAWINGS, SPECIFICATIONS, OR OTHER DATA ARE USED FOR ANY PURPOSE OTHER THAN IN CONNECTION WITH A DEFINITELY-RELATED GOVERNMENT PROCUREMENT OPERATION, THE UNITED STATES GOVERNMENT THEREBY INCURS NO RESPONSIBILITY NOR ANY OBLIGATION WHATSOEVER, AND THE FACT THAT THE GOVERNMENT MAY HAVE FORMULATED, FURNISHED, OR IN ANY WAY SUPPLIED THE SAID DRAWINGS, SPECIFICATIONS OR OTHER DATA IS NOT TO BE REGARDED BY IMPLICATION OR OTHERWISE AS IN ANY MANNER LICENSING THE HOLDER OR ANY OTHER PERSON OR CORPORATION, OR CONVEYING ANY RIGHTS OR PERMISSION TO MANUFACTURE, USE, OR SELL ANY PATENTED INVENTION THAT MAY IN ANY WAY BE RELATED THERETO.

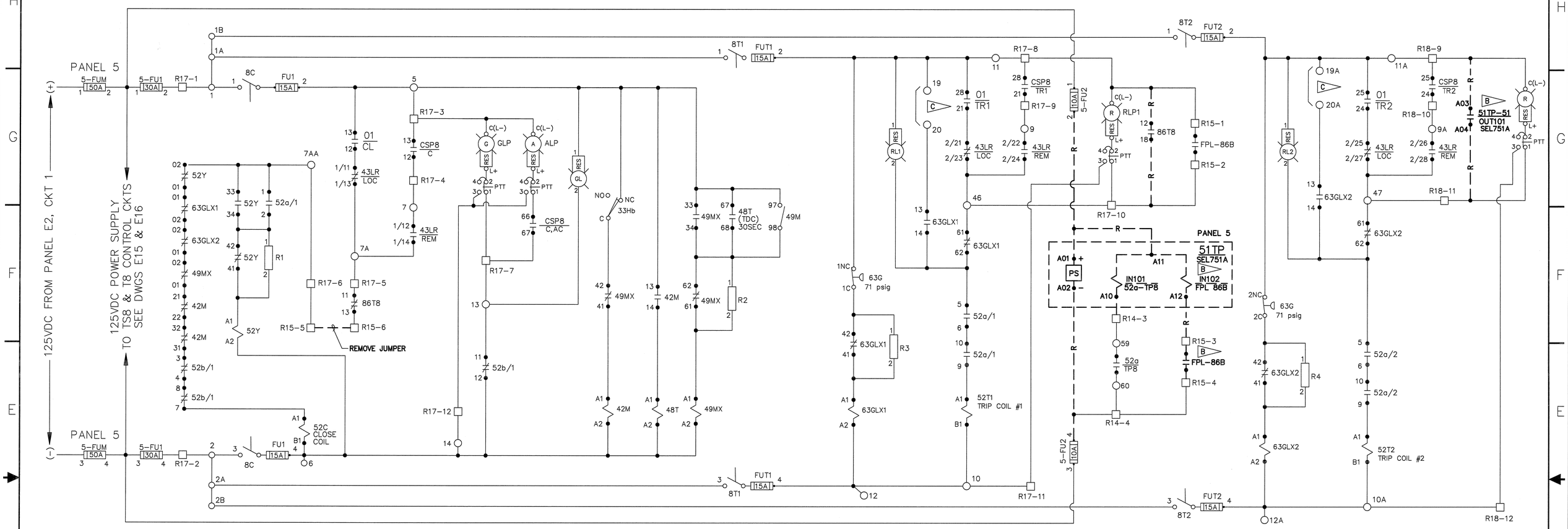

TP8 SF6 115KV BREAKER DC CONTROL

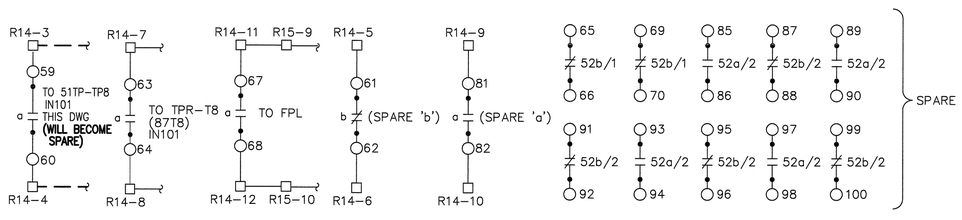

BREAKER AUXILIARY SWITCH CONTACTS

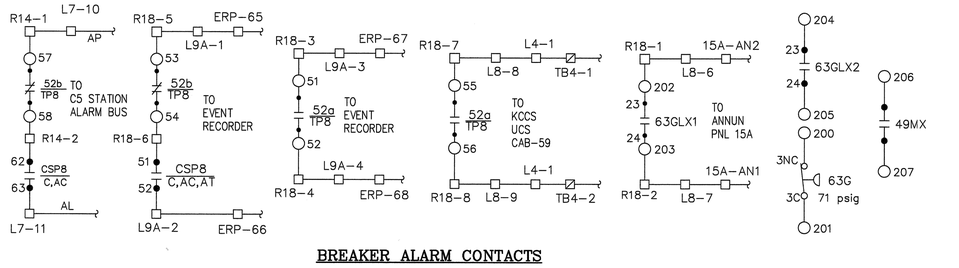

BREAKER ALARM CONTACTS

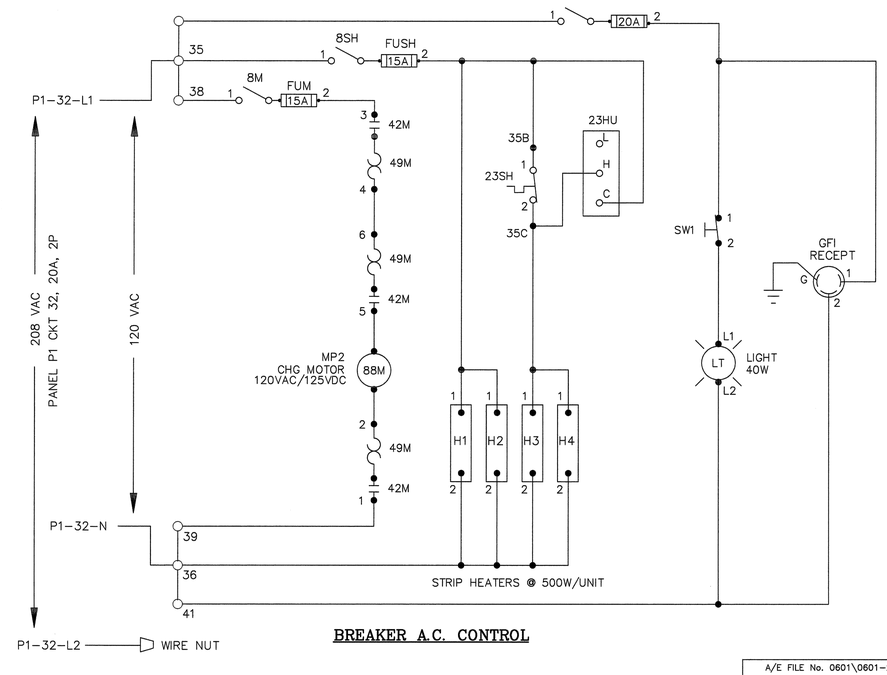

BREAKER A.C. CONTROL

REFERENCE DRAWINGS

CONTROL PANEL 5 MODIFICATIONS & WIRING DIAGRAMS ..... SELAH/NEWKIRK DRAWING 84233, SHEETS 1 THROUGH 18.

SPECIFIC NOTES:

A. FOR LEGEND AND GENERAL NOTES, SEE DRAWING E1.

B ▷ REMOVE EQUIPMENT AND CONNECTIONS. NEW CONNECTIONS SHALL BE ROUTED TO TP8 TRIP CIRCUIT. SEE DRAWING E14.

C ▷ OPTIONAL LOW SF6 PRESSURE TRIP NOT CONNECTED AT THIS TIME.

D. REFERENCE DRAWINGS WILL BE PROVIDED TO THE CONTRACTOR AFTER CONTRACT AWARD.

SYM.	ZONE	DESCRIPTION	DATE	APPROVED
		REVISIONS		

ENGINEER OF RECORD: LARRY JONES — PE LICENSE NO. 19837

Fred Wilson & Associates, Inc. Consulting Engineers
C.A. NO. 7188 • 904-398-8636
3970 Hendricks Avenue • Jacksonville, FL 32207

SIGNATURES		DATE
DESIGNED	M. YUDIN	5/09
DRAWN	R. LENOVER	5/09
CHECKED	L. JONES	5/09
SUBMITTED		9/24/09
APPROVED		9/24/09
APPROVED		
APPROVED		
APPROVED		
APPROVED		
APPROVED		

NATIONAL AERONAUTICS AND SPACE ADMINISTRATION
JOHN F. KENNEDY SPACE CENTER, NASA
KENNEDY SPACE CENTER, FLORIDA

MODIFY C-5 SUBSTATION FOR RING BUS CONFIGURATION

115kV BREAKER TP8
EXISTING D.C. SCHEMATIC DIAGRAM

FILE NO. | SIZE F | DWG. NO. 79K38551
PROJ. NO. PCN 98778 | SHEET 15

A/E FILE No. 0601\0601-25\0601-25.5
FILE: E13.DWG
THIS DRAWING PREPARED BY AutoCAD 2008

E13

NOTICE — WHEN GOVERNMENT DRAWINGS, SPECIFICATIONS, OR OTHER DATA ARE USED FOR ANY PURPOSE OTHER THAN IN CONNECTION WITH A DEFINITELY RELATED GOVERNMENT PROCUREMENT OPERATION, THE UNITED STATES GOVERNMENT THEREBY INCURS NO RESPONSIBILITY NOR ANY OBLIGATION WHATSOEVER; AND THE FACT THAT THE GOVERNMENT MAY HAVE FORMULATED, FURNISHED, OR IN ANY WAY SUPPLIED THE SAID DRAWINGS, SPECIFICATIONS OR OTHER DATA IS NOT TO BE REGARDED BY IMPLICATION OR OTHERWISE IN ANY MANNER LICENSING THE HOLDER OR ANY OTHER PERSON OR CORPORATION, OR CONVEYING ANY RIGHTS OR PERMISSION TO MANUFACTURE, USE, OR SELL ANY PATENTED INVENTION THAT MAY IN ANY WAY BE RELATED THERETO.

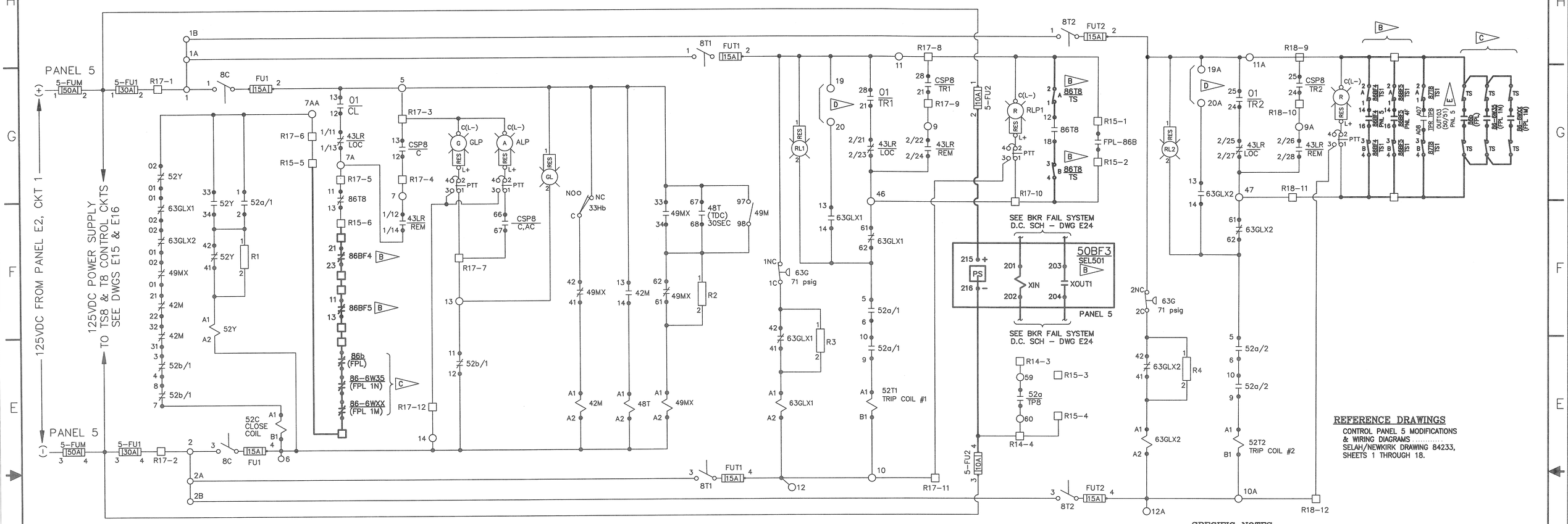

TP8 SF6 115KV BREAKER DC CONTROL

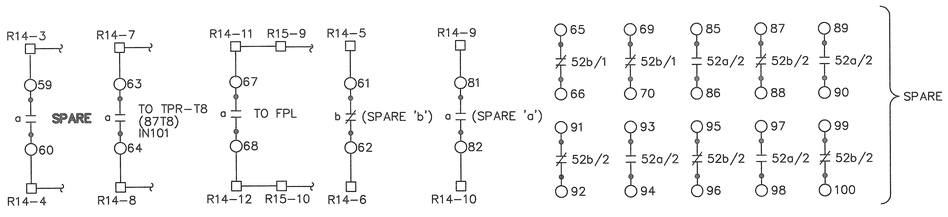

BREAKER AUXILIARY SWITCH CONTACTS

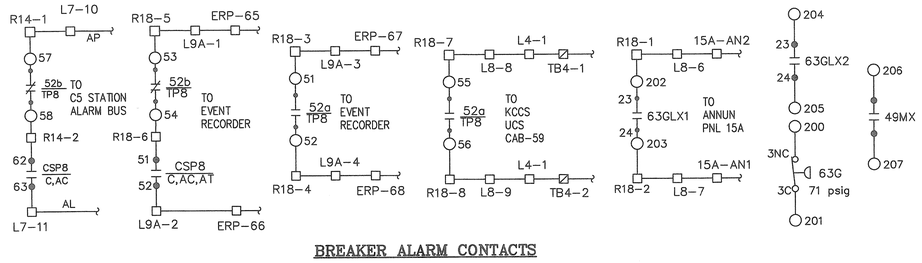

BREAKER ALARM CONTACTS

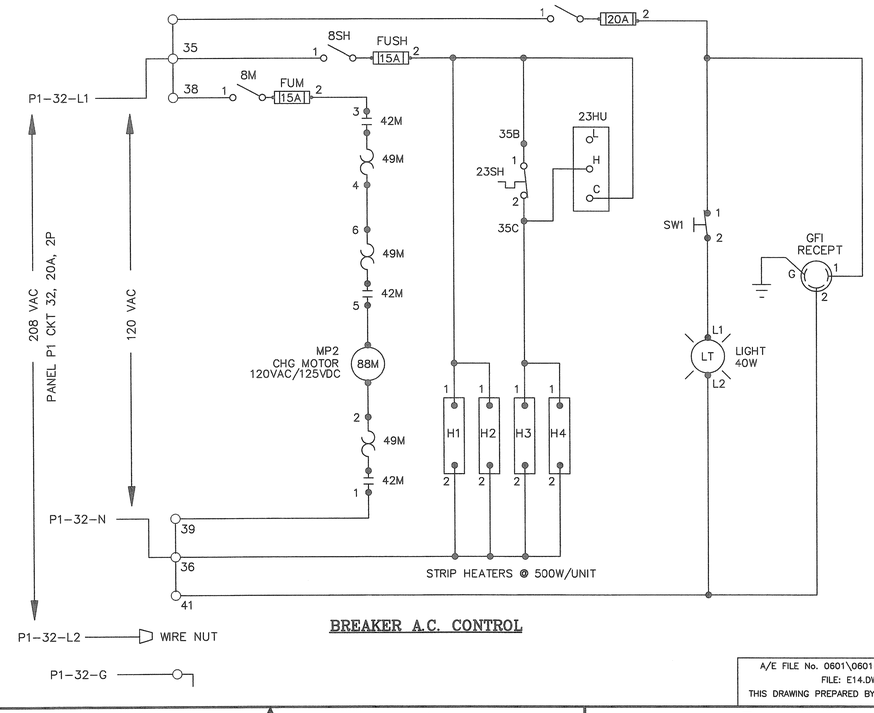

BREAKER A.C. CONTROL

SPECIFIC NOTES:

A. FOR LEGEND AND GENERAL NOTES, SEE DRAWING E1.

B ▷ PROVIDE EQUIPMENT.

C ▷ EQUIPMENT SHOWN SHALL BE FURNISHED AND CONNECTED TO THE STATION COMMON FPL INTERFACE JUNCTION BOX BY FPL. FIELD WIRING BETWEEN THE STATION COMMON FPL INTERFACE JUNCTION BOX AND NASA CONTROL EQUIPMENT SHALL BE PERFORMED BY THE CONTRACTOR. FINAL CONNECTIONS TO FPL EQUIPMENT SHALL BE PERFORMED BY FPL.

D ▷ OPTIONAL LOW SF6 PRESSURE TRIP NOT CONNECTED AT THIS TIME.

E ▷ THE CONTRACTOR SHALL CONNECT OUTPUT 103 AT THE EXISTING 87T8 RELAY AS SHOWN. (TO BE USED AS OVERCURRENT TRIP).

F. EQUIPMENT AND CONNECTIONS SHOWN IN BOLD ARE NEW AND SHALL BE PROVIDED BY THE CONTRACTOR.

G. REFERENCE DRAWINGS WILL BE PROVIDED TO THE CONTRACTOR AFTER CONTRACT AWARD.

SYM.	ZONE	DESCRIPTION	DATE	APPROVED
		REVISIONS		

ENGINEER OF RECORD: LARRY JONES — PE LICENSE NO. 19837
Fred Wilson & Associates, Inc. Consulting Engineers
C.A. NO. 7188 • 904-398-8636
3970 Hendricks Avenue • Jacksonville, FL 32207

SIGNATURES		DATE
DESIGNED	M. YUDIN	5/09
DRAWN	R. LENOVER	5/09
CHECKED	L. JONES	5/09
SUBMITTED		9/24/09
APPROVED		9/24/09
APPROVED		
APPROVED		
APPROVED		
APPROVED		
APPROVED		

NATIONAL AERONAUTICS AND SPACE ADMINISTRATION
JOHN F. KENNEDY SPACE CENTER, NASA
KENNEDY SPACE CENTER, FLORIDA

MODIFY C-5 SUBSTATION FOR RING BUS CONFIGURATION

115kV BREAKER TP8
MODIFIED D.C. SCHEMATIC DIAGRAM

FILE NO. | SIZE F | DWG. NO. 79K38551
PROJ. NO. PCN 98778 | SHEET 16

A/E FILE No. 0601\0601-25\0601-25.5
FILE: E14.DWG
THIS DRAWING PREPARED BY AutoCAD 2008

E14

NOTICE – WHEN GOVERNMENT DRAWINGS, SPECIFICATIONS, OR OTHER DATA ARE USED FOR ANY PURPOSE OTHER THAN IN CONNECTION WITH A DEFINITELY RELATED GOVERNMENT PROCUREMENT OPERATION, THE UNITED STATES GOVERNMENT THEREBY INCURS NO RESPONSIBILITY NOR ANY OBLIGATION WHATSOEVER; AND THE FACT THAT THE GOVERNMENT MAY HAVE FORMULATED, FURNISHED, OR IN ANY WAY SUPPLIED THE SAID DRAWINGS, SPECIFICATIONS OR OTHER DATA IS NOT TO BE REGARDED BY IMPLICATION OR OTHERWISE IN ANY MANNER LICENSING THE HOLDER OR ANY OTHER PERSON OR CORPORATION, OR CONVEYING ANY RIGHTS OR PERMISSION TO MANUFACTURE, USE, OR SELL ANY PATENTED INVENTION THAT MAY IN ANY WAY BE RELATED THERETO.

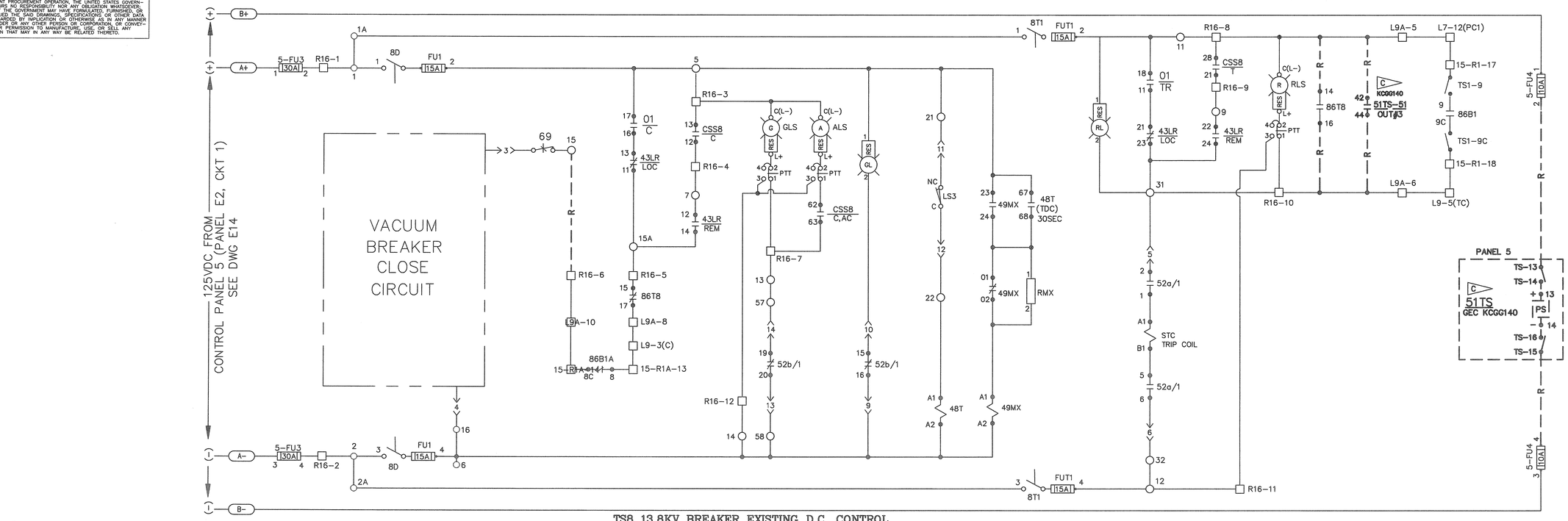

TS8 13.8KV BREAKER EXISTING D.C. CONTROL

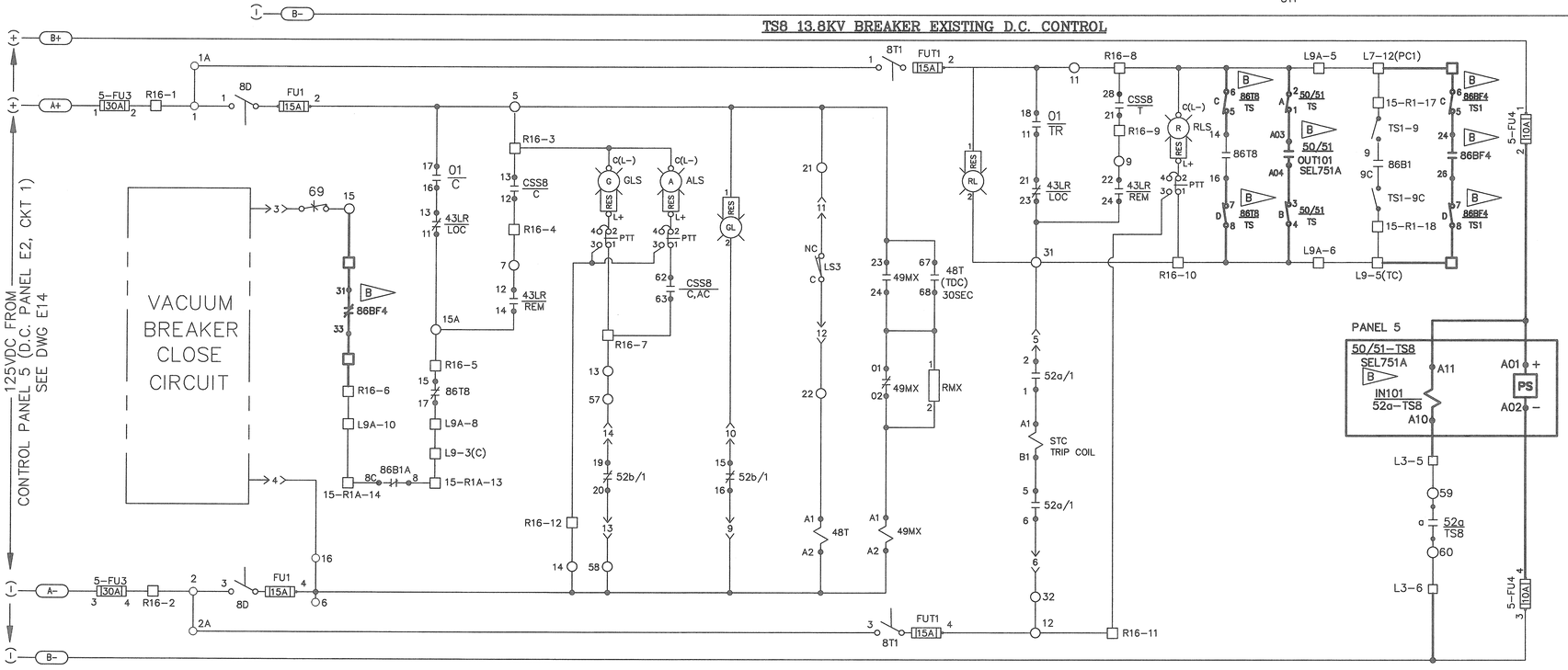

TS8 13.8KV BREAKER MODIFIED D.C. CONTROL

REFERENCE DRAWINGS

CONTROL PANEL 5 MODIFICATIONS & WIRING DIAGRAMS..... SELAH/NEWKIRK DRAWING 84233, SHEETS 1 THROUGH 18.

SPECIFIC NOTES:

A. FOR LEGEND AND GENERAL NOTES, SEE DRAWING E1.

B. EQUIPMENT AND CONNECTIONS SHOWN IN BOLD ARE NEW AND ARE TO BE PROVIDED BY THE CONTRACTOR.

C. REMOVE EQUIPMENT.

D. REFERENCE DRAWINGS WILL BE PROVIDED TO THE CONTRACTOR AFTER CONTRACT AWARD.

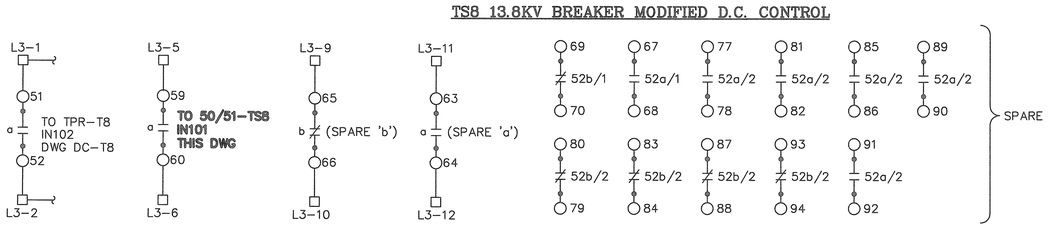

BREAKER AUXILIARY SWITCH CONTACTS

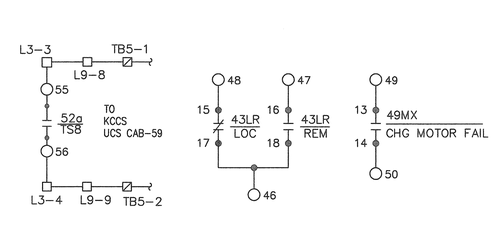

BREAKER ALARM CONTACTS

SYM.	ZONE	DESCRIPTION	DATE	APPROVED
		REVISIONS		

ENGINEER OF RECORD: LARRY JONES — PE LICENSE NO. 19837

Fred Wilson & Associates, Inc. Consulting Engineers
C.A. NO. 7188 • 904-398-8636
3970 Hendricks Avenue • Jacksonville, FL 32207

SIGNATURES		DATE
DESIGNED	M. YUDIN	5/09
DRAWN	R. LENOVER	5/09
CHECKED	L. JONES	5/09
SUBMITTED		9/24/09
APPROVED		9/24/09
APPROVED		
APPROVED		
APPROVED		
APPROVED		
APPROVED		

NATIONAL AERONAUTICS AND SPACE ADMINISTRATION
JOHN F. KENNEDY SPACE CENTER, NASA
KENNEDY SPACE CENTER, FLORIDA

MODIFY C-5 SUBSTATION FOR RING BUS CONFIGURATION

15kV BREAKER TS8 EXISTING/MODIFIED D.C. SCHEMATIC DIAGRAM

FILE NO. | SIZE F | DWG. NO. 79K38551

PROJ. NO. PCN 98778 | SHEET 17

A/E FILE No. 0601\0601-25\0601-25.5
FILE: E15.DWG
THIS DRAWING PREPARED BY AutoCAD 2008

E15

NOTICE – WHEN GOVERNMENT DRAWINGS, SPECIFICATIONS, OR OTHER DATA ARE USED FOR ANY PURPOSE OTHER THAN IN CONNECTION WITH A DEFINITELY RELATED GOVERNMENT PROCUREMENT OPERATION, THE UNITED STATES GOVERNMENT THEREBY INCURS NO RESPONSIBILITY NOR ANY OBLIGATION WHATSOEVER; AND THE FACT THAT THE GOVERNMENT MAY HAVE FORMULATED, FURNISHED, OR IN ANY WAY SUPPLIED THE SAID DRAWINGS, SPECIFICATIONS, OR OTHER DATA IS NOT TO BE REGARDED BY IMPLICATION OR OTHERWISE IN ANY MANNER CONSTRUED, TO LICENSE THE HOLDER OR ANY OTHER PERSON OR CORPORATION, OR CONVEYING ANY RIGHTS OR PERMISSION TO MANUFACTURE, USE, OR SELL ANY PATENTED INVENTION THAT MAY IN ANY WAY BE RELATED THERETO.

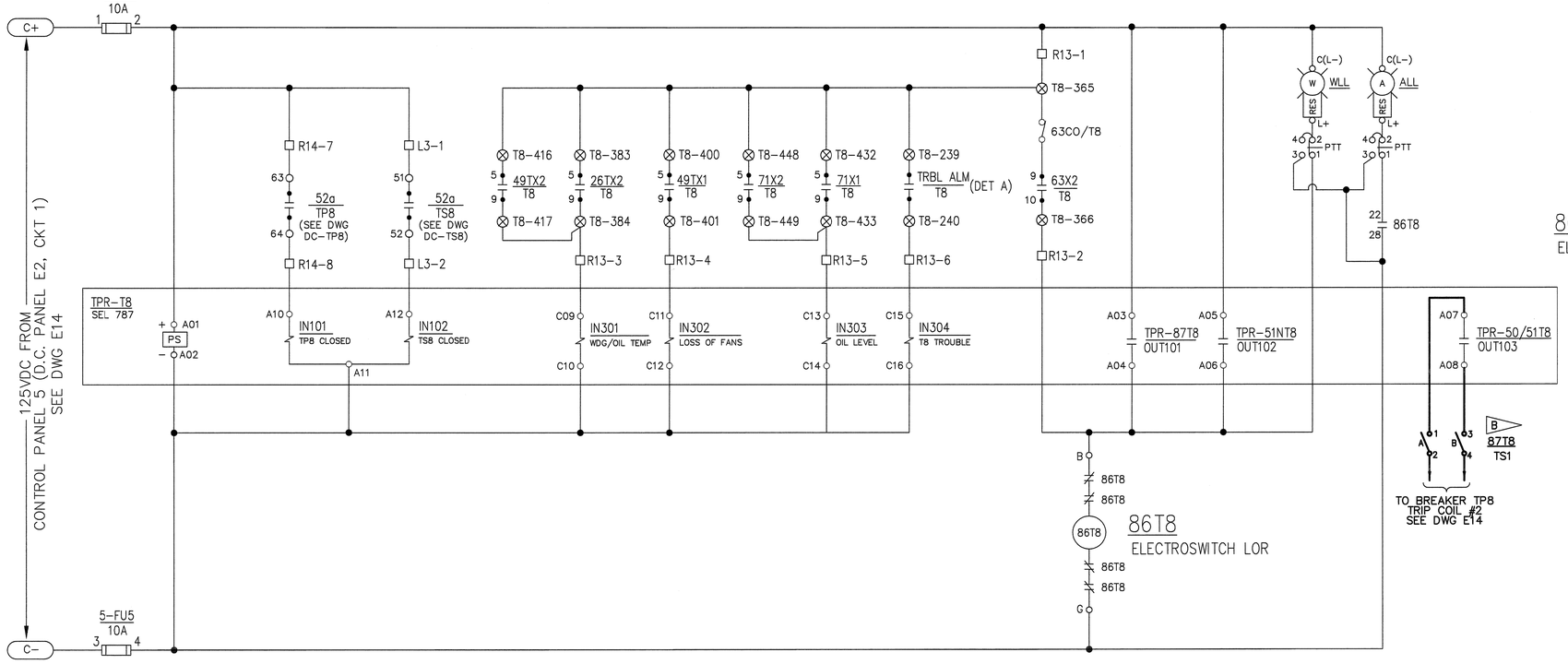

TRANSFORMER T8 – EXISTING PROTECTIVE RELAY SYSTEM DC SCHEMATIC

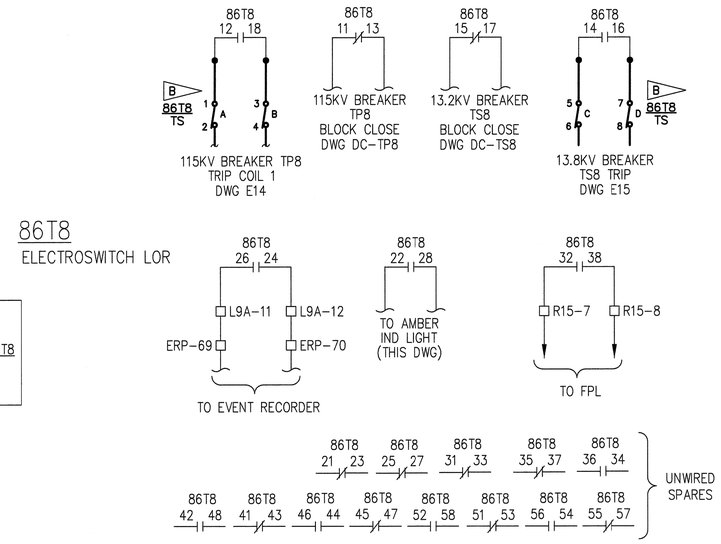

REFERENCE DRAWINGS

CONTROL PANEL 5 MODIFICATIONS & WIRING DIAGRAMS ..... SELAH/NEWKIRK DRAWING 84233, SHEETS 1 THROUGH 18.

SPECIFIC NOTES:

A. FOR LEGEND AND GENERAL NOTES, SEE DRAWING E1.

B ▷ EQUIPMENT AND CONNECTIONS SHOWN IN BOLD ARE NEW AND ARE TO BE PROVIDED BY THE CONTRACTOR.

C. REFERENCE DRAWINGS WILL BE PROVIDED TO THE CONTRACTOR AFTER CONTRACT AWARD.

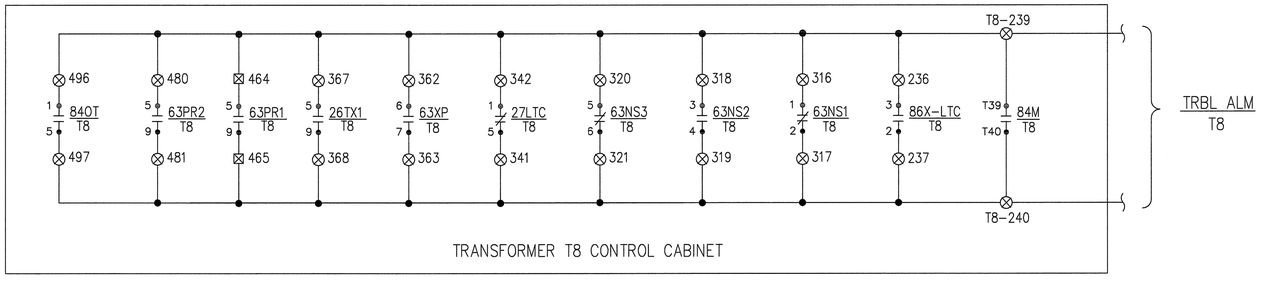

TRANSFORMER T8 EXISTING TROUBLE ALARM SCHEMATIC

SYM.	ZONE	DESCRIPTION	DATE	APPROVED
		REVISIONS		

ENGINEER OF RECORD: LARRY JONES — PE LICENSE NO. 19837

Fred Wilson & Associates, Inc.
Consulting Engineers
C.A. NO. 7188 • 904-398-8636
3970 Hendricks Avenue • Jacksonville, FL 32207

SIGNATURES		DATE
DESIGNED	M. YUDIN	5/09
DRAWN	R. LENOVER	5/09
CHECKED	L. JONES	5/09
SUBMITTED		9/24/09
APPROVED		9/24/09
APPROVED		
APPROVED		
APPROVED		
APPROVED		
APPROVED		

NATIONAL AERONAUTICS AND SPACE ADMINISTRATION
JOHN F. KENNEDY SPACE CENTER, NASA
KENNEDY SPACE CENTER, FLORIDA

MODIFY C-5 SUBSTATION FOR RING BUS CONFIGURATION

TRANSFORMER T8
EXISTING/MODIFIED
D.C. SCHEMATIC DIAGRAM

FILE NO. | SIZE F | DWG. NO. 79K38551

PROJ. NO. PCN 98778 | SHEET 18

A/E FILE No. 0601\0601-25\0601-25.5
FILE: E16.DWG
THIS DRAWING PREPARED BY AutoCAD 2008

E16

NOTICE – WHEN GOVERNMENT DRAWINGS, SPECIFICATIONS, OR OTHER DATA ARE USED FOR ANY PURPOSE OTHER THAN IN CONNECTION WITH A DEFINITELY RELATED GOVERNMENT PROCUREMENT OPERATION, THE UNITED STATES GOVERNMENT THEREBY INCURS NO RESPONSIBILITY NOR ANY OBLIGATION WHATSOEVER; AND THE FACT THAT THE GOVERNMENT MAY HAVE FORMULATED, FURNISHED, OR IN ANY WAY SUPPLIED THE SAID DRAWINGS, SPECIFICATIONS, OR OTHER DATA, IS NOT TO BE REGARDED BY IMPLICATION OR OTHERWISE AS IN ANY MANNER LICENSING THE HOLDER OR ANY OTHER PERSON OR CORPORATION, OR CONVEYING ANY RIGHTS OR PERMISSION TO MANUFACTURE, USE, OR SELL ANY PATENTED INVENTION THAT MAY IN ANY WAY BE RELATED THERETO.

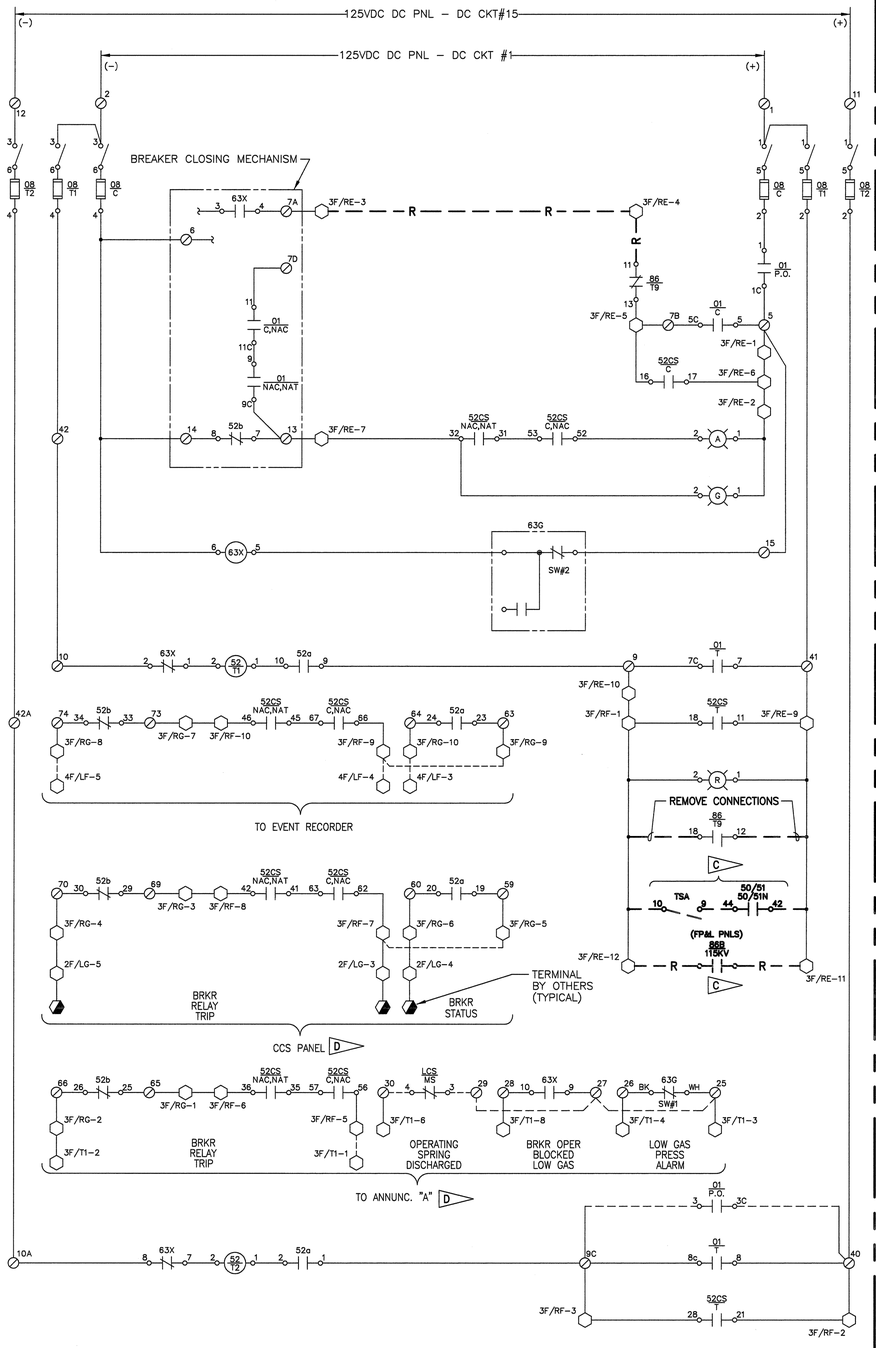

115kV BREAKER TP9
EXISTING D.C. SCHEMATIC DIAGRAM

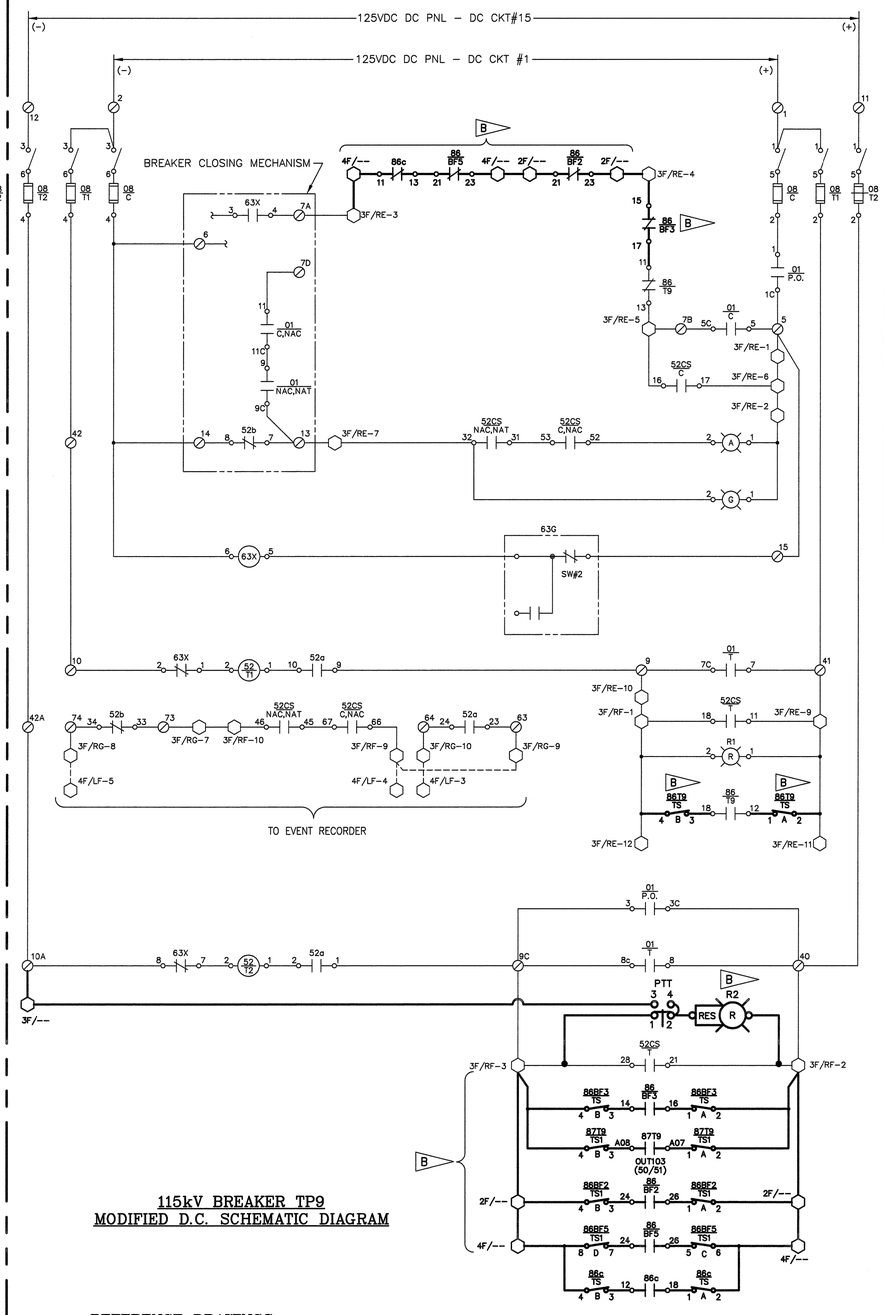

115kV BREAKER TP9
MODIFIED D.C. SCHEMATIC DIAGRAM

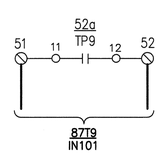

	–	XFMR T10 RELAYING	XFMR T9 RELAYING	XFMR T8 RELAYING	115KV BUS DIFFERENTIAL			115KV BREAKER FAILURE RELAYING									
	XFMR SECONDARY OVERCURRENT	XFMR T10 DIFF. & OVERCURRENT (PANEL 1F)	XFMR T9 DIFF. & OVERCURRENT (PANEL 3F)	XFMR T8 DIFF. & OVERCURRENT (PANEL 5)	ZONE "a"	ZONE "b"	ZONE "c" (PANEL 4F)	115KV BREAKER TP10 (PANEL 1F)	115KV BREAKER HBT1 (PANEL 1F & 2F)	115KV BREAKER TP9 (PANEL 3F)	–	115KV BREAKER TP8 (PANEL 5)	115KV BREAKER HBT2 (PANEL 4F & 5)	115KV FPL BREAKER 6W35 (1N)	115KV FPL BREAKER 6W47 (1S)	115KV FPL BREAKER 6WXXX (1M)	
DEVICE FUNCTION NUMBER	50/51–T8 50/51–T9 50/51–T10	87T10 86T10 50/51N	87T9 86T9 50/51N	87T8 86T8 50/51N	87a 86a	87b 86b	87c 86c	50BF1(x) 86BF1	50BF1(y) 86BF2	50BF2(x) 86BF3	– –	50BF3(x) 86BF4	50BF3(y) 86BF5	RELAYS PROVIDED BY FPL			DEVICE FUNCTION NUMBER
RELAY TYPE	SEL 751A	SEL 787	SEL 787	SEL 787	RELAYS PROVIDED BY FPL		SEL 587Z	SEL 501		SEL 501		SEL 501					RELAY TYPE
115KV BREAKER TP10		X			X			X	X						X	X	115KV BREAKER TP10
115KV BREAKER TP9			X				X		X	X			X				115KV BREAKER TP9
115KV BREAKER TP8				X		X						X	X	X		X	115KV BREAKER TP8
115KV BREAKER HBT1					X			X	X	X			X		X	X	115KV BREAKER HBT1
115KV BREAKER HBT2						X	X		X	X		X	X	X		X	115KV BREAKER HBT2
115KV FPL BREAKER 6W35 (1N)						X						X	X	X		X	115KV FPL BREAKER 6W35 (1N)
115KV FPL BREAKER 6W47 (1S)					X			X	X						X	X	115KV FPL BREAKER 6W47 (1S)
115KV FPL BREAKER 6WXXX (1M)					X	X		X	X			X	X	X	X	X	115KV FPL BREAKER 6WXXX (1M)
13.8KV TRANSFORMER BREAKER TS10	X	X						X									13.8KV TRANSFORMER BREAKER TS10
13.8KV TRANSFORMER BREAKER TS9	X		X							X							13.8KV TRANSFORMER BREAKER TS9
13.8KV TRANSFORMER BREAKER TS8	X			X								X					13.8KV TRANSFORMER BREAKER TS8
ALARM								X	X	X		X	X				ALARM
BLOCK CLOSE		X	X	X	X	X	X	X	X	X		X	X				BLOCK CLOSE

PROTECTIVE RELAY FUNCTION TABLE

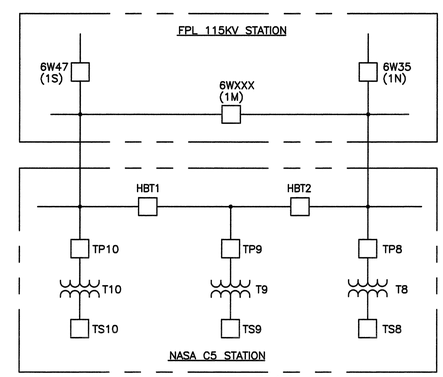

KEY PLAN

LEGEND

- [X] TRIP ASSOCIATED DEVICE
- INITIATES BREAKER FAILURE TIMING

DEVICE NO.	DESCRIPTION
50BF	BREAKER FAIL PROTECTION x – "X" COIL y – "Y" COIL
86	LOCKOUT RELAY T – TRANSFORMER B – BUS BF – BREAKER FAIL x – "X" COIL y – "Y" COIL
87	DIFFERENTIAL RELAY T – TRANSFORMER B –BUS

REFERENCE DRAWINGS

WIRING SCHEMATIC & CONNECTION DRAWINGS ..... IET DRAWINGS IET–1 THRU IET–19

SPECIFIC NOTES:

A. FOR LEGEND AND GENERAL NOTES, SEE DRAWING E1.

B ▷ EQUIPMENT AND CONNECTIONS SHOWN IN BOLD ARE NEW AND ARE TO BE PROVIDED BY THE CONTRACTOR.

C ▷ REMOVE EQUIPMENT AND CONNECTIONS.

D ▷ CONTACT OUTPUTS FOR ANNUNCIATOR AND CCS PANELS ARE SHOWN FOR EXISTING D.C. SCHEMATIC DAIGRAM AND IS TYPICAL FOR MODIFIED D.C. SCHEMATIC DAIGRAM.

SYM.	ZONE	DESCRIPTION	DATE	APPROVED
		REVISIONS		

ENGINEER OF RECORD: LARRY JONES — PE LICENSE NO. 19837

Fred Wilson & Associates, Inc.
Consulting Engineers
C.A. NO. 7188 • 904-398-8636
3970 Hendricks Avenue • Jacksonville, FL 32207

SIGNATURES		DATE
DESIGNED	M. YUDIN	5/09
DRAWN	R. LENOVER	5/09
CHECKED	L. JONES	5/09
SUBMITTED		9/24/09
APPROVED		9/24/09
APPROVED		
APPROVED		
APPROVED		
APPROVED		
APPROVED		

NATIONAL AERONAUTICS AND SPACE ADMINISTRATION
JOHN F. KENNEDY SPACE CENTER, NASA
KENNEDY SPACE CENTER, FLORIDA

MODIFY C–5 SUBSTATION FOR RING BUS CONFIGURATION

115kV BREAKER TP9
EXISTING/MODIFIED D.C. SCHEMATIC DIAGRAMS AND RELAY FUNCTION TABLE

FILE NO. — SIZE F — DWG. NO. 79K38551
PROJ. NO. PCN 98778 — SHEET 19

A/E FILE No. 0601\0601–25\0601–25.5
FILE: E17.DWG
THIS DRAWING PREPARED BY AutoCAD 2008

E17

NOTICE - WHEN GOVERNMENT DRAWINGS, SPECIFICATIONS, OR OTHER DATA ARE USED FOR ANY PURPOSE OTHER THAN IN CONNECTION WITH A DEFINITELY RELATED GOVERNMENT PROCUREMENT OPERATION, THE UNITED STATES GOVERNMENT THEREBY INCURS NO RESPONSIBILITY NOR ANY OBLIGATION WHATSOEVER, AND THE FACT THAT THE GOVERNMENT MAY HAVE FORMULATED, FURNISHED, OR IN ANY WAY SUPPLIED THE SAID DRAWINGS, SPECIFICATIONS OR OTHER DATA IS NOT TO BE REGARDED BY IMPLICATION OR OTHERWISE AS IN ANY MANNER LICENSING THE HOLDER OR ANY OTHER PERSON OR CORPORATION, OR CONVEYING ANY RIGHTS OR PERMISSION TO MANUFACTURE, USE OR SELL ANY PATENTED INVENTION THAT MAY IN ANY WAY BE RELATED THERETO.

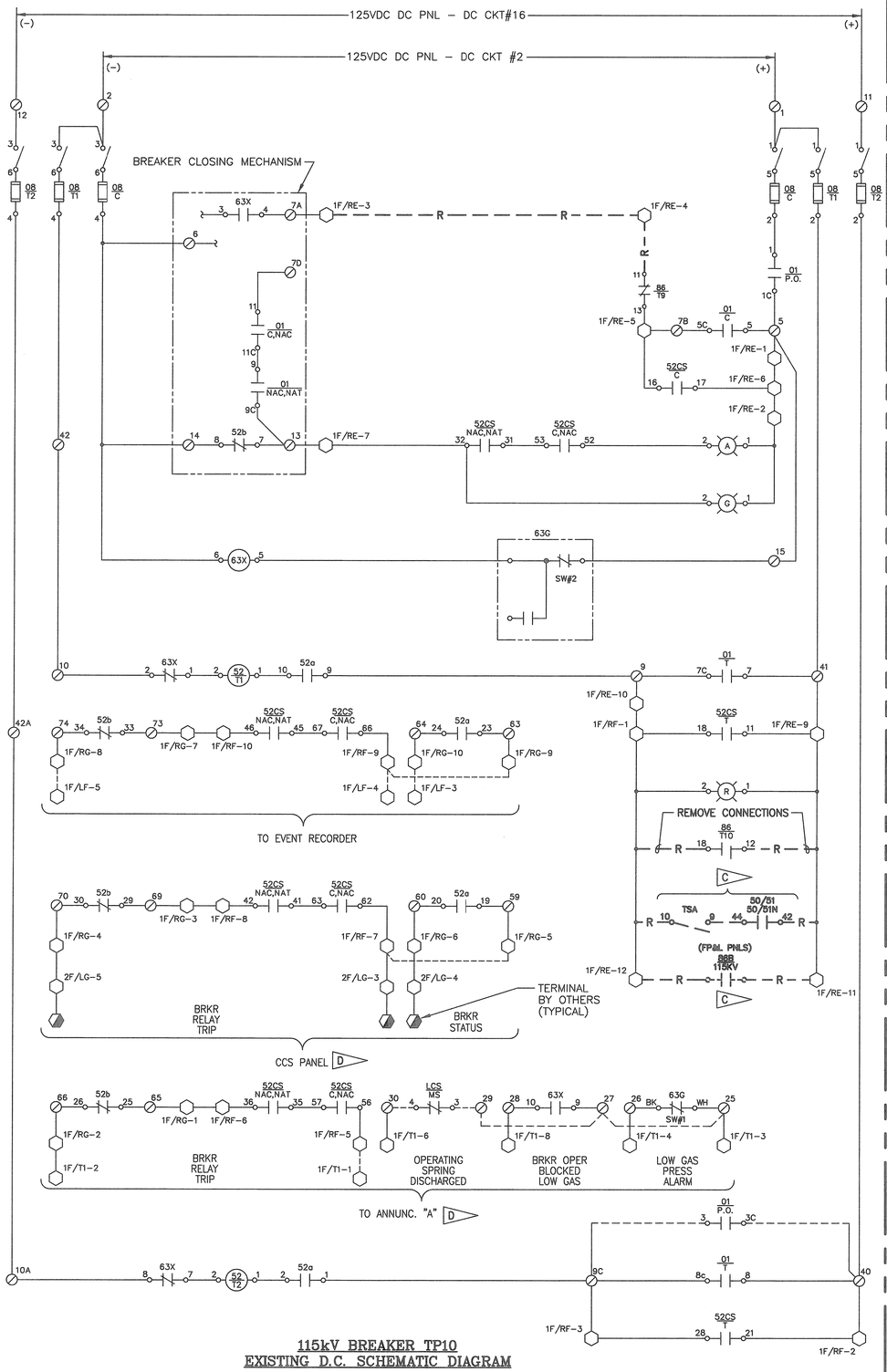

115kV BREAKER TP10
EXISTING D.C. SCHEMATIC DIAGRAM

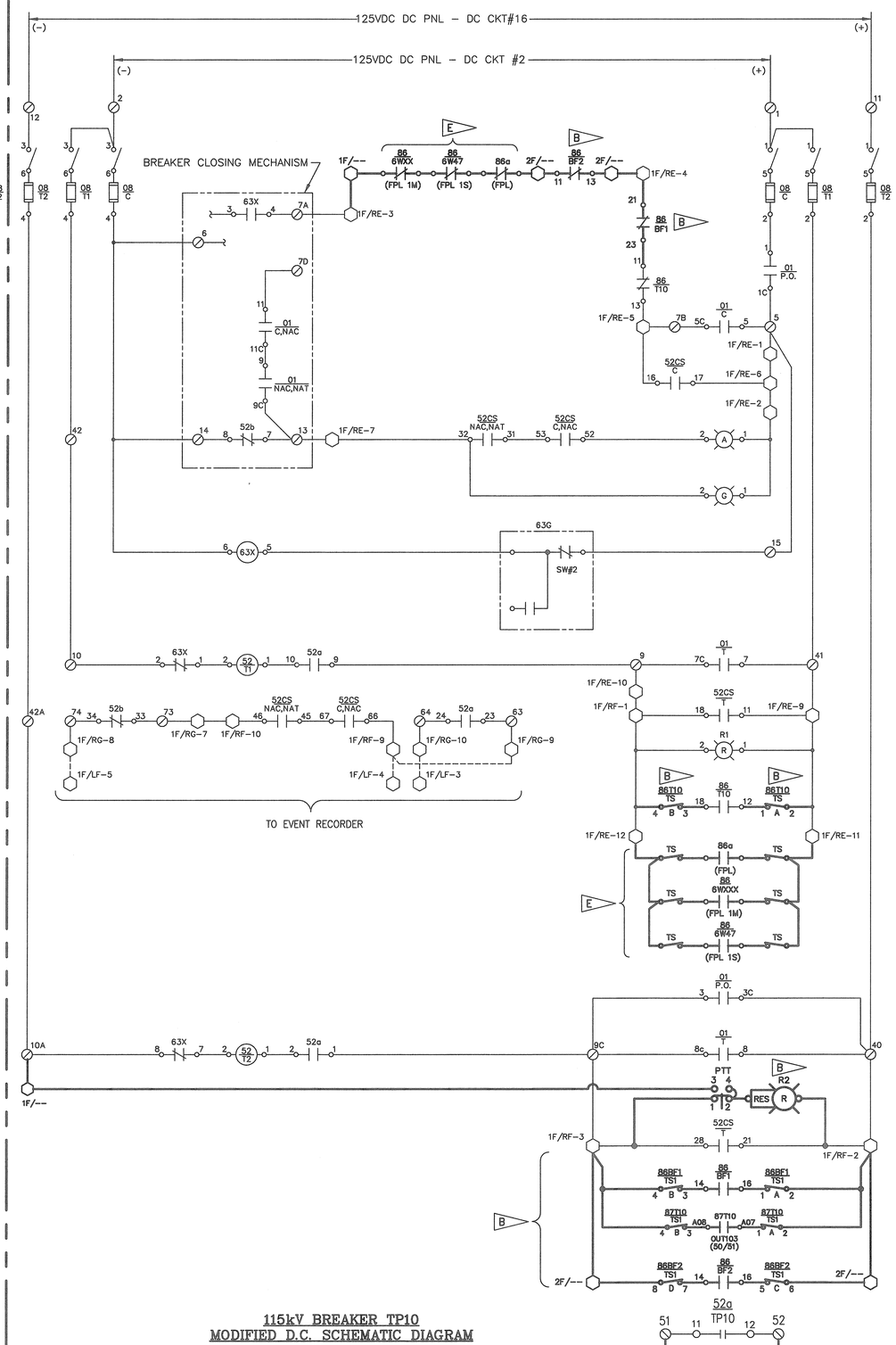

115kV BREAKER TP10
MODIFIED D.C. SCHEMATIC DIAGRAM

REFERENCE DRAWINGS

WIRING SCHEMATIC & CONNECTION DRAWINGS ..... IET DRAWINGS IET-1 THRU IET-19

SPECIFIC NOTES:

A. FOR LEGEND AND GENERAL NOTES, SEE DRAWING E1.

B. EQUIPMENT AND CONNECTIONS SHOWN IN BOLD ARE NEW AND ARE TO BE PROVIDED BY THE CONTRACTOR.

C. REMOVE EQUIPMENT AND CONNECTIONS.

D. CONTACT OUTPUTS FOR ANNUNCIATOR AND CCS PANELS ARE SHOWN FOR EXISTING D.C. SCHEMATIC DIAGRAM AND ARE TYPICAL FOR MODIFIED D.C. SCHEMATIC DIAGRAM.

E. EQUIPMENT SHOWN SHALL BE FURNISHED AND CONNECTED TO THE STATION COMMON FPL INTERFACE JUNCTION BOX BY FPL. FIELD WIRING BETWEEN THE STATION COMMON FPL INTERFACE JUNCTION BOX AND NASA CONTROL EQUIPMENT SHALL BE PERFORMED BY THE CONTRACTOR. FINAL CONNECTIONS TO FPL EQUIPMENT SHALL BE PERFORMED BY FPL.

F. REFERENCE DRAWINGS WILL BE PROVIDED TO THE CONTRACTOR AFTER CONTRACT AWARD.

SYM.	ZONE	DESCRIPTION	DATE	APPROVED
		REVISIONS		

ENGINEER OF RECORD: LARRY JONES — PE LICENSE NO. 19837
Fred Wilson & Associates, Inc. Consulting Engineers
C.A. NO. 7188 • 904-398-8636
3970 Hendricks Avenue • Jacksonville, FL 32207

SIGNATURES		DATE
DESIGNED	M. YUDIN	5/09
DRAWN	R. LENOVER	5/09
CHECKED	L. JONES	5/09
SUBMITTED		9/24/09
APPROVED		9/24/09
APPROVED		
APPROVED		
APPROVED		
APPROVED		
APPROVED		

NATIONAL AERONAUTICS AND SPACE ADMINISTRATION
JOHN F. KENNEDY SPACE CENTER, NASA
KENNEDY SPACE CENTER, FLORIDA

MODIFY C-5 SUBSTATION FOR RING BUS CONFIGURATION

115kV BREAKER TP10
EXISTING/MODIFIED
D.C. SCHEMATIC DIAGRAMS

FILE NO. | SIZE F | DWG. NO. 79K38551
PROJ. NO. PCN 98778 | SHEET 20

A/E FILE No. 0601\0601-25\0601-25.5
FILE: E18.DWG
THIS DRAWING PREPARED BY AutoCAD 2008

E18

NOTICE – WHEN GOVERNMENT DRAWINGS, SPECIFICATIONS, OR OTHER DATA ARE USED FOR ANY PURPOSE OTHER THAN IN CONNECTION WITH A DEFINITELY RELATED GOVERNMENT PROCUREMENT OPERATION, THE UNITED STATES GOVERNMENT THEREBY INCURS NO RESPONSIBILITY NOR ANY OBLIGATION WHATSOEVER; AND THE FACT THAT THE GOVERNMENT MAY HAVE FORMULATED, FURNISHED, OR IN ANY WAY SUPPLIED THE SAID DRAWINGS, SPECIFICATIONS OR OTHER DATA IS NOT TO BE REGARDED BY IMPLICATION OR OTHERWISE IN ANY MANNER LICENSING THE HOLDER OR ANY OTHER PERSON OR CORPORATION, OR CONVEYING ANY RIGHTS OR PERMISSION TO MANUFACTURE, USE, OR SELL ANY PATENTED INVENTION THAT MAY IN ANY WAY BE RELATED THERETO.

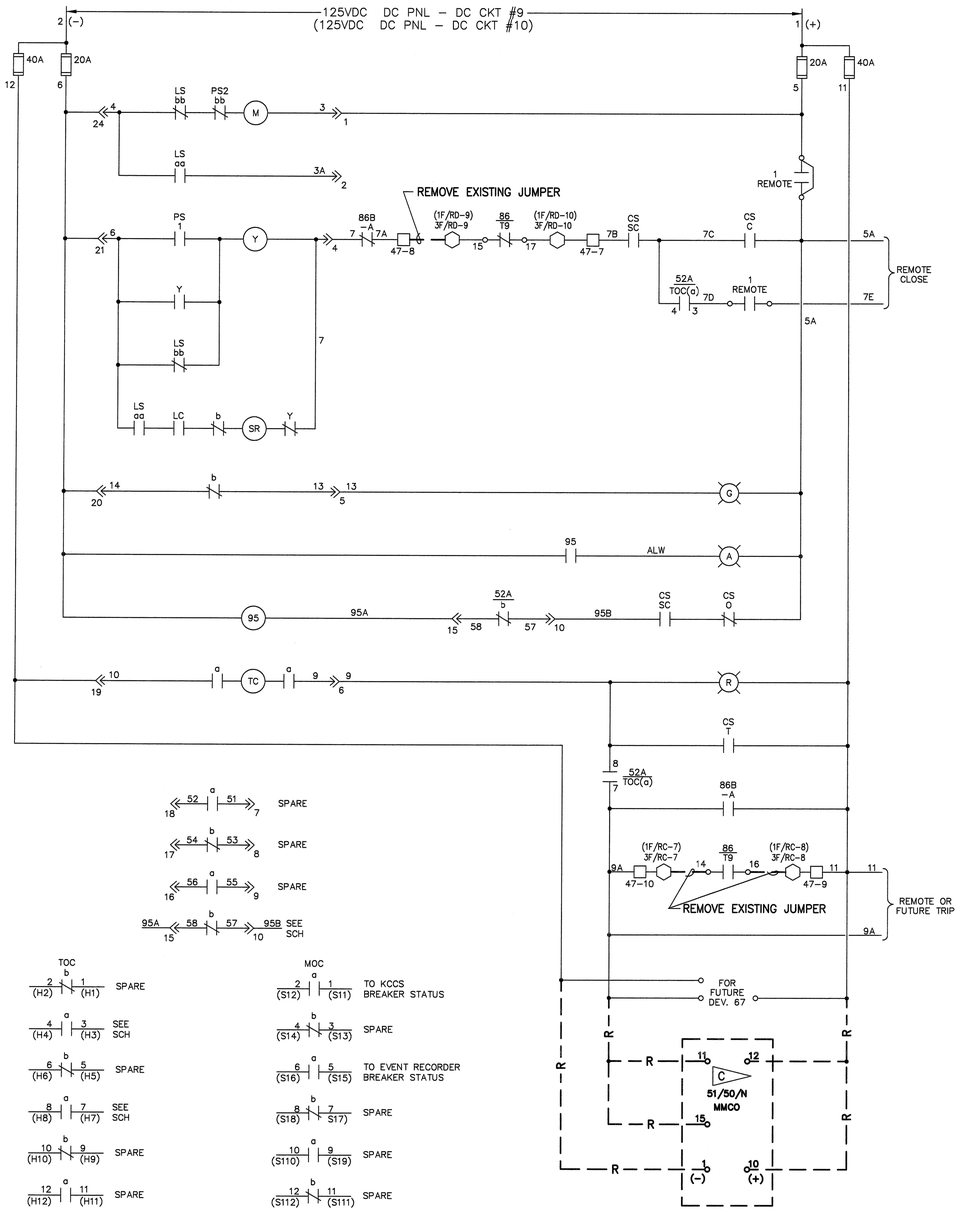

13.8kV MAIN BREAKER TS9 EXISTING D.C. SCHEMATIC DIAGRAM

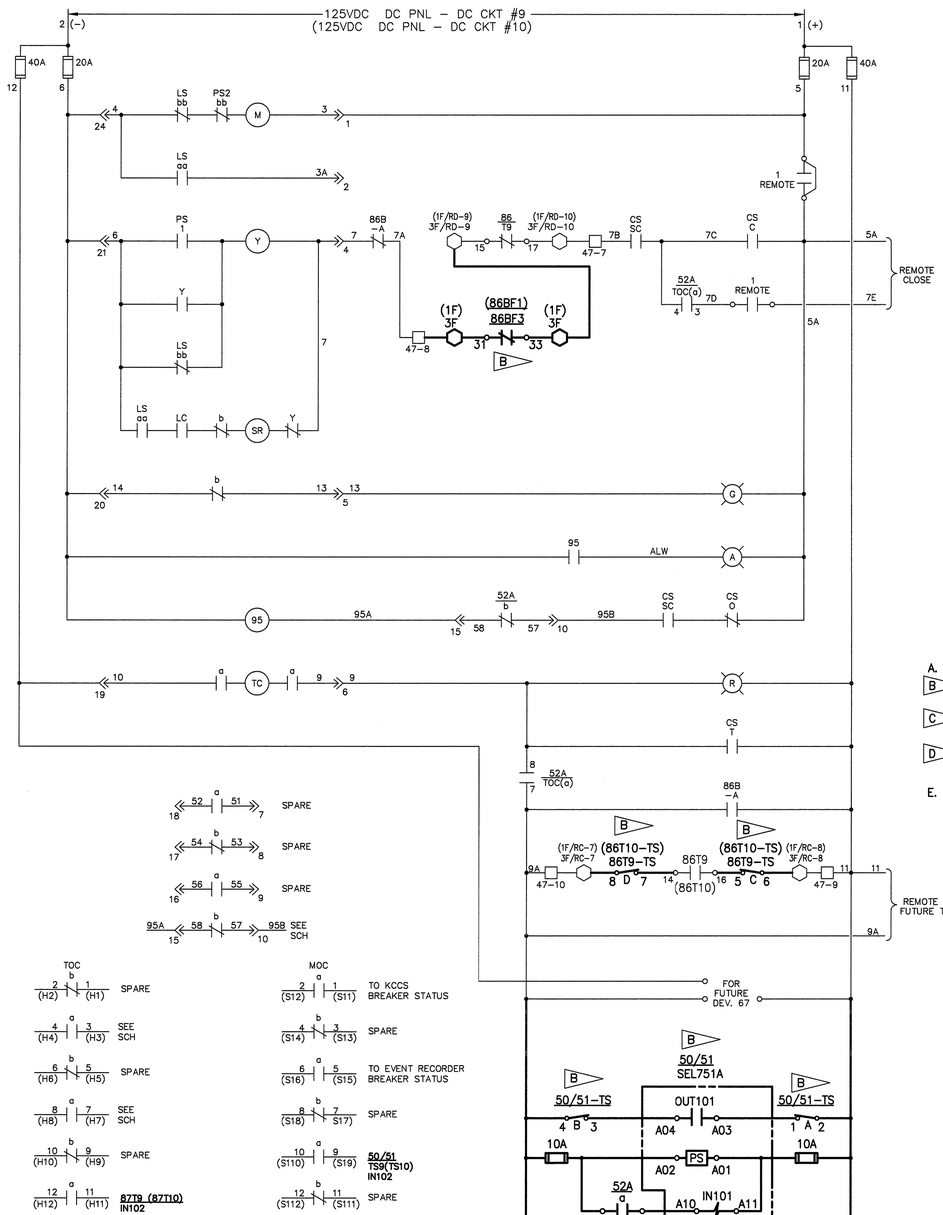

13.8KV MAIN BREAKER TS9 MODIFIED D.C. SCHEMATIC DIAGRAM

REFERENCE DRAWINGS

WIRING SCHEMATIC & CONNECTION DRAWINGS ..... IET DRAWINGS IET–1 THRU IET–19

SPECIFIC NOTES:

A. FOR LEGEND AND GENERAL NOTES, SEE DRAWING E1.

B. EQUIPMENT AND CONNECTIONS SHOWN IN BOLD ARE NEW AND ARE TO BE PROVIDED BY THE CONTRACTOR.

C. REMOVE EQUIPMENT AND CONNECTIONS. RETURN THE MMCO RELAY TO THE GOVERNMENT.

D. WHERE INDICATED IN PARENTHESIS (), ITEM DESIGNATIONS ARE APPLICABLE TO BREAKER TS10.

E. REFERENCE DRAWINGS WILL BE PROVIDED TO THE CONTRACTOR AFTER CONTRACT AWARD.

SYM.	ZONE	DESCRIPTION	DATE	APPROVED
		REVISIONS		

ENGINEER OF RECORD: LARRY JONES — PE LICENSE NO. 19837

Fred Wilson & Associates, Inc. Consulting Engineers
C.A. NO. 7188 • 904-398-8636
3970 Hendricks Avenue • Jacksonville, FL 32207

SIGNATURES		DATE
DESIGNED	M. YUDIN	5/09
DRAWN	R. LENOVER	5/09
CHECKED	L. JONES	5/09
SUBMITTED		9/24/09
APPROVED		9/24/09
APPROVED		
APPROVED		
APPROVED		
APPROVED		
APPROVED		

NATIONAL AERONAUTICS AND SPACE ADMINISTRATION
JOHN F. KENNEDY SPACE CENTER, NASA
KENNEDY SPACE CENTER, FLORIDA

MODIFY C–5 SUBSTATION FOR RING BUS CONFIGURATION

13.8kV BREAKERS TS9 AND TS10 EXISTING/MODIFIED D.C. SCHEMATIC DIAGRAMS

FILE NO. | SIZE F | DWG. NO. 79K38551

PROJ. NO. PCN 98778 | SHEET 21

A/E FILE No. 0601\0601–25\0601–25.5
FILE: E19.DWG
THIS DRAWING PREPARED BY AutoCAD 2008

E19

NOTICE – WHEN GOVERNMENT DRAWINGS, SPECIFICATIONS, OR OTHER DATA ARE USED FOR ANY PURPOSE OTHER THAN IN CONNECTION WITH A DEFINITELY RELATED GOVERNMENT PROCUREMENT OPERATION, THE UNITED STATES GOVERNMENT THEREBY INCURS NO RESPONSIBILITY NOR ANY OBLIGATION WHATSOEVER; AND THE FACT THAT THE GOVERNMENT MAY HAVE FORMULATED, FURNISHED, OR IN ANY WAY SUPPLIED THE SAID DRAWINGS, SPECIFICATIONS, OR OTHER DATA IS NOT TO BE REGARDED BY IMPLICATION OR OTHERWISE AS IN ANY MANNER LICENSING THE HOLDER OR ANY OTHER PERSON OR CORPORATION, OR CONVEYING ANY RIGHTS OR PERMISSION TO MANUFACTURE, USE, OR SELL ANY PATENTED INVENTION THAT MAY IN ANY WAY BE RELATED THERETO.

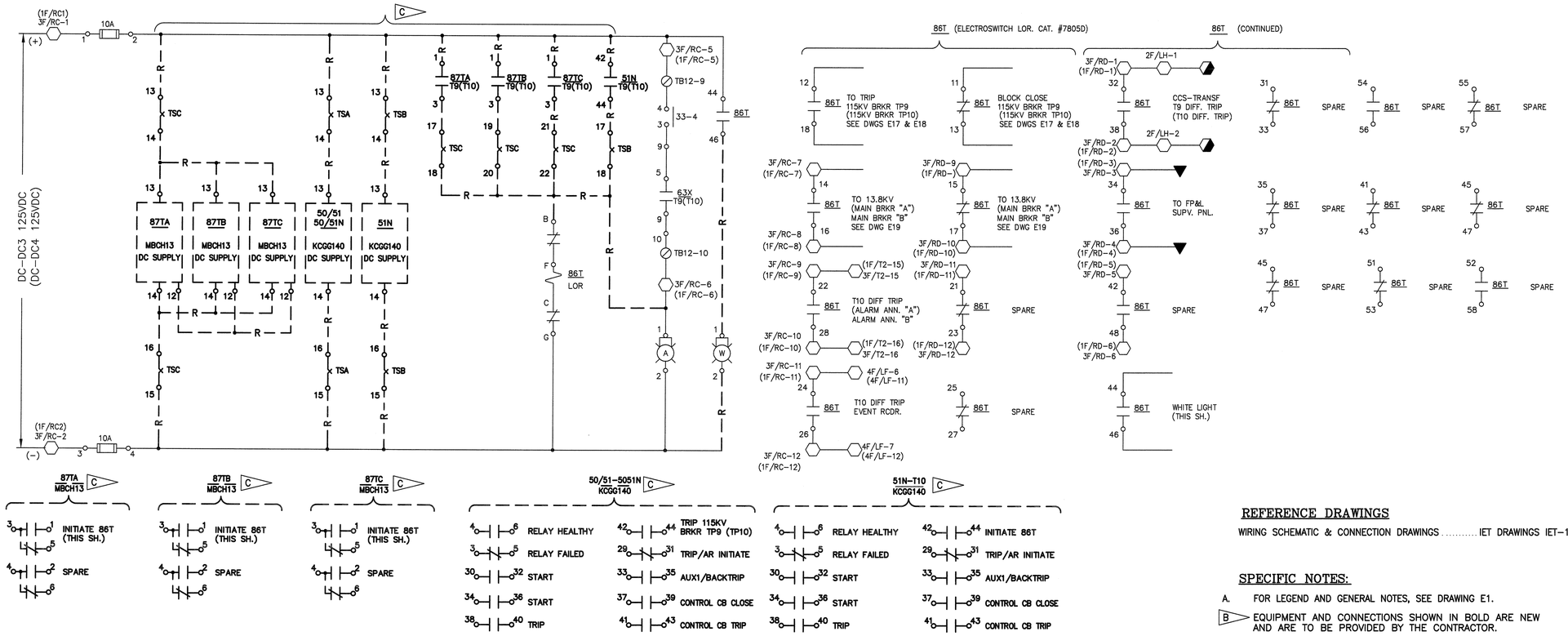

TRANSFORMER T9 (T10) DIFFERENTIAL – EXISTING D.C. SCHEMATIC DIAGRAM D

REFERENCE DRAWINGS

WIRING SCHEMATIC & CONNECTION DRAWINGS ..... IET DRAWINGS IET-1 THRU IET-19

SPECIFIC NOTES:

A. FOR LEGEND AND GENERAL NOTES, SEE DRAWING E1.

B. EQUIPMENT AND CONNECTIONS SHOWN IN BOLD ARE NEW AND ARE TO BE PROVIDED BY THE CONTRACTOR.

C. REMOVE EQUIPMENT AND CONNECTIONS. RETURN ALL RELAYS TO THE GOVERNMENT.

D. WHERE INDICATED IN PARENTHESIS (), ITEM DESIGNATIONS ARE APPLICABLE TO TRANSFORMER T10.

E. REFERENCE DRAWINGS WILL BE PROVIDED TO THE CONTRACTOR AFTER CONTRACT AWARD.

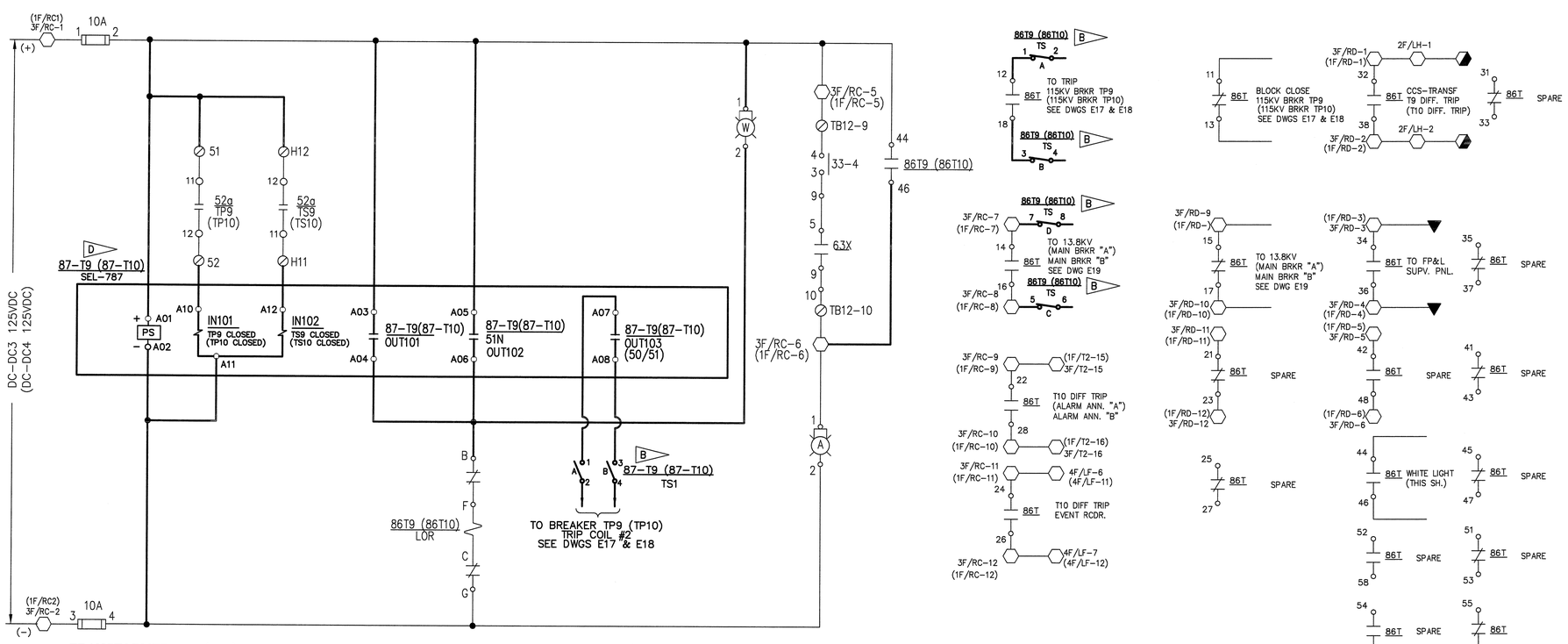

TRANSFORMER T9 (T10) DIFFERENTIAL – MODIFIED D.C. SCHEMATIC DIAGRAM D

LEGEND

- 115KV BREAKER OR TRANSFORMER TERMINAL BLOCK
- 115KV CONTROL PANEL TERMINAL BLOCK
- 115KV FP&L PANEL TERMINAL BLOCK
- CCS HIM PANEL TERMINAL BLOCK

SYM.	ZONE	DESCRIPTION	DATE	APPROVED
		REVISIONS		

ENGINEER OF RECORD: LARRY JONES — PE LICENSE NO. 19837

Fred Wilson & Associates, Inc. Consulting Engineers
C.A. NO. 7188 • 904-398-8636
3970 Hendricks Avenue • Jacksonville, FL 32207

SIGNATURES		DATE
DESIGNED	M. YUDIN	5/09
DRAWN	R. LENOVER	5/09
CHECKED	L. JONES	5/09
SUBMITTED		9/24/09
APPROVED		9/24/09
APPROVED		
APPROVED		
APPROVED		
APPROVED		
APPROVED		

NATIONAL AERONAUTICS AND SPACE ADMINISTRATION
JOHN F. KENNEDY SPACE CENTER, NASA
KENNEDY SPACE CENTER, FLORIDA

MODIFY C-5 SUBSTATION FOR RING BUS CONFIGURATION

TRANSFORMERS T9 AND T10 EXISTING/MODIFIED D.C. SCHEMATIC DIAGRAM

FILE NO. | SIZE F | DWG. NO. 79K38551

PROJ. NO. PCN 98778 | SHEET 22

A/E FILE No. 0601\0601-25\0601-25.5
FILE: E20.DWG
THIS DRAWING PREPARED BY AutoCAD 2008

E20

KSC FORM 1-11A (REV 6/91) (C/G 12/93)

09/23/2009 F:\ELECT\0601\0601-25\0601-25.5\E20

NOTICE – WHEN GOVERNMENT DRAWINGS, SPECIFICATIONS, OR OTHER DATA ARE USED FOR ANY PURPOSE OTHER THAN IN CONNECTION WITH A DEFINITELY RELATED GOVERNMENT PROCUREMENT OPERATION, THE UNITED STATES GOVERNMENT THEREBY INCURS NO RESPONSIBILITY NOR ANY OBLIGATION WHATSOEVER; AND THE FACT THAT THE GOVERNMENT MAY HAVE FORMULATED, FURNISHED, OR IN ANY WAY SUPPLIED THE SAID DRAWINGS, SPECIFICATIONS, OR OTHER DATA IS NOT TO BE REGARDED BY IMPLICATION OR OTHERWISE AS IN ANY MANNER LICENSING THE HOLDER OR ANY OTHER PERSON OR CORPORATION, OR CONVEYING ANY RIGHTS OR PERMISSION TO MANUFACTURE, USE, OR SELL ANY PATENTED INVENTION THAT MAY IN ANY WAY BE RELATED THERETO.

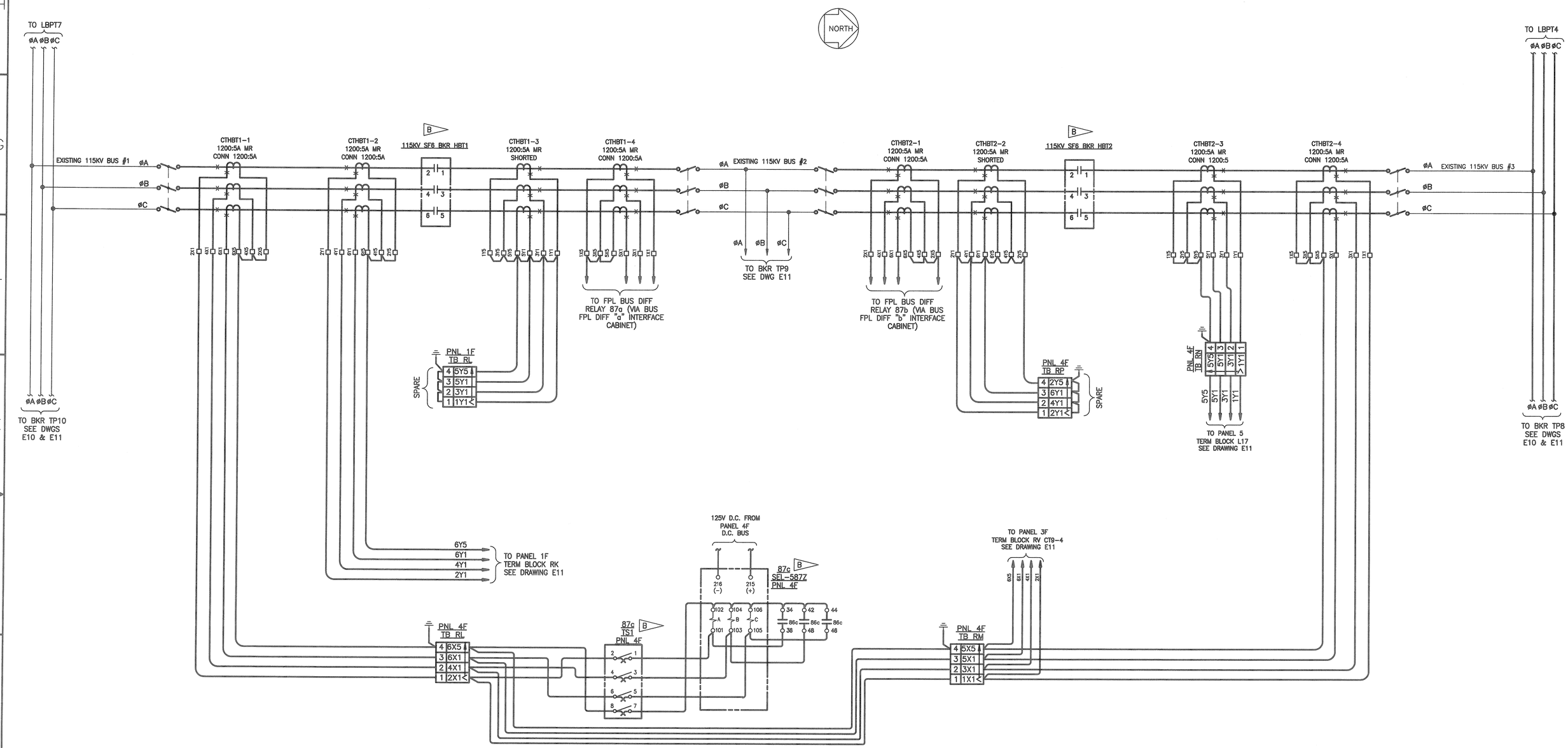

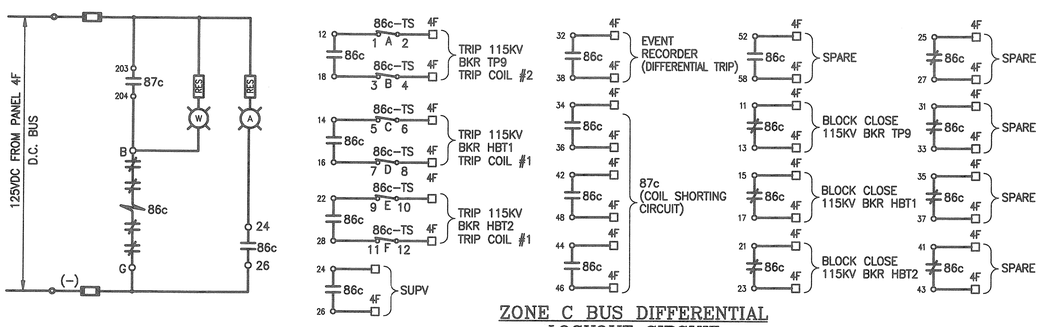

ZONE C BUS DIFFERENTIAL LOCKOUT CIRCUIT D.C. SCHEMATIC DIAGRAM

REFERENCE DRAWINGS

115kV CONTROL SWITCHBOARD WIRING DIAGRAM.....GEC ALSTHOM DRAWING 394286-WD1 THRU WD4

CONTROL PANEL 5 MODIFICATIONS & WIRING DIAGRAMS.....SELAH/NEWKIRK DRAWING 84233, SHEETS 1 THROUGH 18.

SPECIFIC NOTES:

A. FOR LEGEND AND GENERAL NOTES, SEE DRAWING E1.

B. EQUIPMENT AND CONNECTIONS SHOWN IN BOLD ARE NEW AND ARE TO BE PROVIDED BY THE CONTRACTOR.

C. REFERENCE DRAWINGS WILL BE PROVIDED TO THE CONTRACTOR AFTER CONTRACT AWARD.

SYM.	ZONE	DESCRIPTION	DATE	APPROVED
		REVISIONS		

ENGINEER OF RECORD: LARRY JONES — PE LICENSE NO. 19837

Fred Wilson & Associates, Inc.
Consulting Engineers
C.A. NO. 7188 • 904-398-8636
3970 Hendricks Avenue • Jacksonville, FL 32207

SIGNATURES		DATE
DESIGNED	M. YUDIN	5/09
DRAWN	M. YUDIN	5/09
CHECKED	L. JONES	5/09
SUBMITTED		8/24/09
APPROVED		8/24/09
APPROVED		
APPROVED		
APPROVED		
APPROVED		
APPROVED		

NATIONAL AERONAUTICS AND SPACE ADMINISTRATION
JOHN F. KENNEDY SPACE CENTER, NASA
KENNEDY SPACE CENTER, FLORIDA

MODIFY C-5 SUBSTATION FOR RING BUS CONFIGURATION

115kV BUS TIE BREAKERS HBT1 AND HBT2
A.C. SCHEMATIC DIAGRAM

FILE NO. | SIZE F | DWG. NO. 79K38551

PROJ. NO. PCN 98778 | SHEET 23

A/E FILE No. 0601\0601-25\0601-25.5
FILE: E21.DWG
THIS DRAWING PREPARED BY AutoCAD 2008

E21

KSC FORM 1-11A (REV 6/91) (C/G 12/93)

09/23/2009 F:\ELECT\0601\0601-25\0601-25.5\E21

NOTICE – WHEN GOVERNMENT DRAWINGS, SPECIFICATIONS, OR OTHER DATA ARE USED FOR ANY PURPOSE OTHER THAN IN CONNECTION WITH A DEFINITELY RELATED GOVERNMENT PROCUREMENT OPERATION, THE UNITED STATES GOVERNMENT THEREBY INCURS NO RESPONSIBILITY NOR ANY OBLIGATION WHATSOEVER, AND THE FACT THAT THE GOVERNMENT MAY HAVE FORMULATED, FURNISHED, OR IN ANY WAY SUPPLIED THE SAID DRAWINGS, SPECIFICATIONS OR OTHER DATA IS NOT TO BE REGARDED BY IMPLICATION OR OTHERWISE AS IN ANY MANNER LICENSING THE HOLDER OR ANY OTHER PERSON OR CORPORATION, OR CONVEYING ANY RIGHTS OR PERMISSION TO MANUFACTURE, USE OR SELL ANY PATENTED INVENTION THAT MAY IN ANY WAY BE RELATED THERETO.

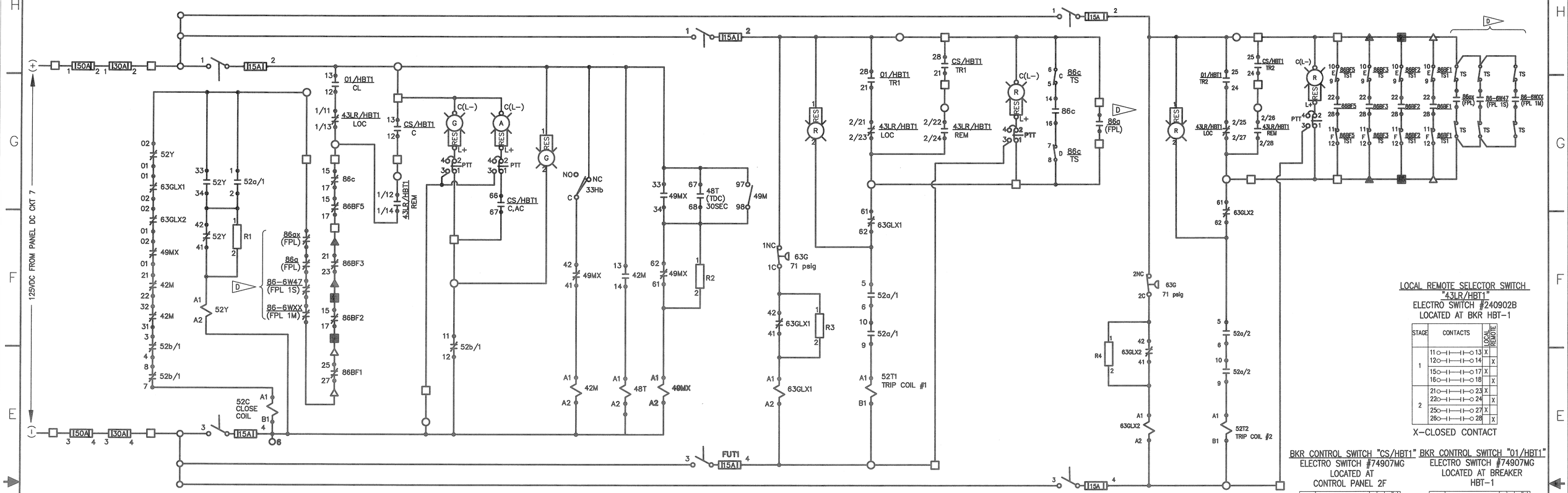

LOCAL REMOTE SELECTOR SWITCH "43LR/HBT1"
ELECTRO SWITCH #240902B
LOCATED AT BKR HBT-1

STAGE	CONTACTS	LOCAL	REMOTE
1	11–13	X	
	12–14		X
	15–17	X	
	16–18		X
2	21–23	X	
	22–24		X
	25–27	X	
	26–28		X

X–CLOSED CONTACT

BKR CONTROL SWITCH "CS/HBT1"
ELECTRO SWITCH #74907MG
LOCATED AT
CONTROL PANEL 2F

STAGE	CONTACTS	TRIP	NAT	NAC	CLOSE
1	12–13				X
	16–17				X
2	21–28	X			
	24–25	X			
3	31–32		X	X	
	35–36		X	X	
4	41–42		X	X	X
5	51–52		X	X	X
6	62–63			X	X
	66–67			X	X
7	71–72	X	X		
	75–76	X	X		

NAT–NORMAL AFTER TRIP
NAC–NORMAL AFTER CLOSE
X–CLOSED CONTACT

BKR CONTROL SWITCH "01/HBT1"
ELECTRO SWITCH #74907MG
LOCATED AT BREAKER
HBT-1

STAGE	CONTACTS	TRIP	NAT	NAC	CLOSE
1	12–13				X
	16–17				X
2	21–28	X			
	24–25	X			
3	31–32		X	X	
	35–36		X	X	
4	41–42		X	X	X
5	51–52		X	X	X
6	62–63			X	X
	66–67			X	X
7	71–72	X	X		
	75–76	X	X		

NAT–NORMAL AFTER TRIP
NAC–NORMAL AFTER CLOSE
X–CLOSED CONTACT

HBT1 SF6 115kV BREAKER DC CONTROL

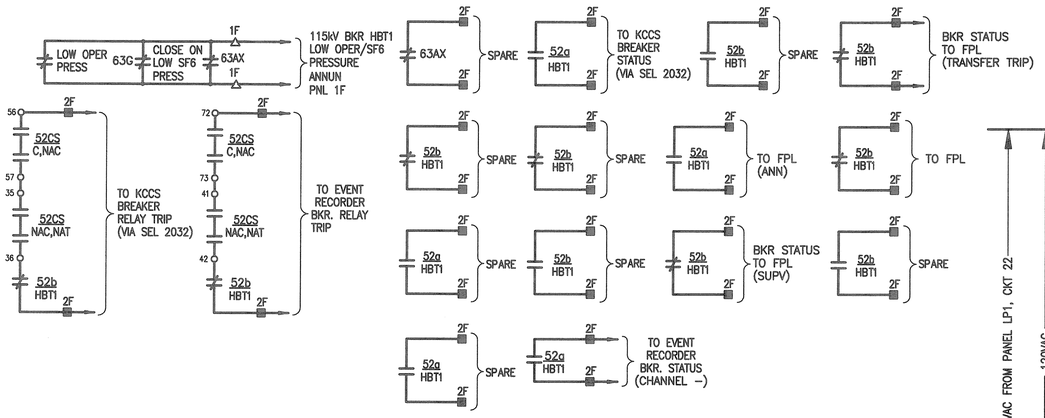

BREAKER AUXILIARY SWITCH CONTACTS

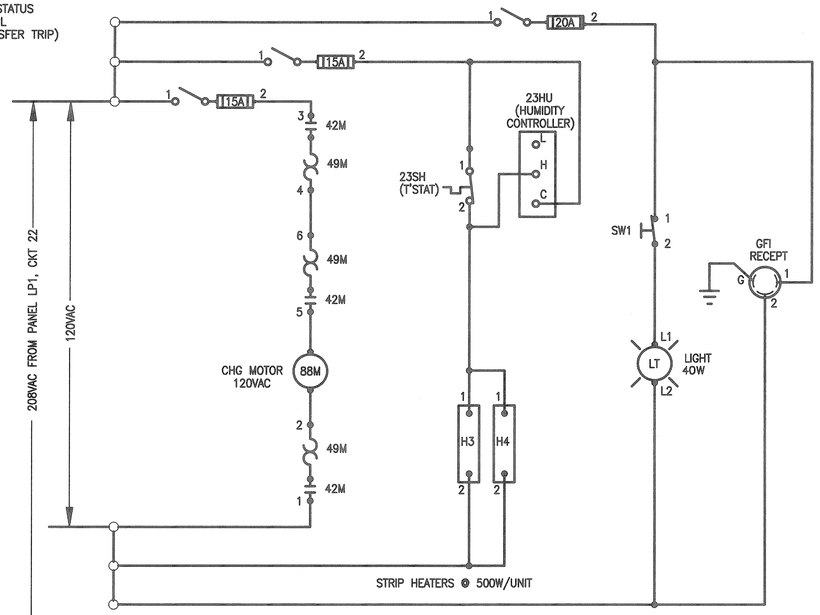

BREAKER A.C. CONTROL

LEGEND:

- TERMINAL AT CONTROL PANEL 1F
- TERMINAL AT CONTROL PANEL 2F
- TERMINAL AT CONTROL PANEL 3F
- TERMINAL AT CONTROL PANEL 4F
- 15A–XX TERMINAL AT PANEL 15A
- ERP–XX TERMINAL AT EVENT RECORDER PANEL
- UCS–59 TERMINAL AT KCCS INTERFACE CABINET UCS–59
- TERMINAL AT 115kV BREAKER HBT1

REFERENCE DRAWINGS

115kV CONTROL SWITCHBOARD WIRING DIAGRAM ..... GEC ALSTHOM DRAWING 394286–WD1 THRU WD4

SPECIFIC NOTES:

A. FOR LEGEND AND GENERAL NOTES, SEE DRAWING E1.

B. DEVICE NUMBERS USED ARE PER IEEE C37.2–1996.

C. EQUIPMENT AND CONNECTIONS SHOWN IN BOLD ARE NEW AND ARE TO BE FURNISHED AND INSTALLED BY THE CONTRACTOR.

D. EQUIPMENT SHOWN SHALL BE FURNISHED AND CONNECTED TO THE STATION COMMON FPL INTERFACE JUNCTION BOX BY FPL. FIELD WIRING BETWEEN THE STATION COMMON FPL INTERFACE JUNCTION BOX AND NASA CONTROL EQUIPMENT SHALL BE PERFORMED BY THE CONTRACTOR. FINAL CONNECTIONS TO FPL EQUIPMENT SHALL BE PERFORMED BY FPL.

SYM.	ZONE	DESCRIPTION	DATE	APPROVED
		REVISIONS		

ENGINEER OF RECORD: LARRY JONES — PE LICENSE NO. 19837
Fred Wilson & Associates, Inc. Consulting Engineers
C.A. NO. 7188 • 904-398-8636
3970 Hendricks Avenue • Jacksonville, FL 32207

SIGNATURES		DATE
DESIGNED	M. YUDIN	5/09
DRAWN	M. YUDIN	5/09
CHECKED	L. JONES	5/09
SUBMITTED		9/24/09
APPROVED		9/24/09
APPROVED		
APPROVED		
APPROVED		
APPROVED		
APPROVED		

NATIONAL AERONAUTICS AND SPACE ADMINISTRATION
JOHN F. KENNEDY SPACE CENTER, NASA
KENNEDY SPACE CENTER, FLORIDA

MODIFY C–5 SUBSTATION FOR RING BUS CONFIGURATION

115kV BUS TIE BREAKER HBT1
D.C. SCHEMATIC DIAGRAM

FILE NO. | SIZE F | DWG. NO. 79K38551
PROJ. NO. PCN 98778 | SHEET 24

A/E FILE No. 0601\0601–25\0601–25.5
FILE: E22.DWG
THIS DRAWING PREPARED BY AutoCAD 2008

E22

KSC FORM 1–11A (REV 6/91) (C/G 12/93) | 09/23/2009 | F:\ELECT\0601\0601–25\0601–25.5\E22

NOTICE – WHEN GOVERNMENT DRAWINGS, SPECIFICATIONS, OR OTHER DATA ARE USED FOR ANY PURPOSE OTHER THAN IN CONNECTION WITH A DEFINITELY RELATED GOVERNMENT PROCUREMENT OPERATION, THE UNITED STATES GOVERNMENT THEREBY INCURS NO RESPONSIBILITY NOR ANY OBLIGATION WHATSOEVER; AND THE FACT THAT THE GOVERNMENT MAY HAVE FORMULATED, FURNISHED, OR IN ANY WAY SUPPLIED THE SAID DRAWINGS, SPECIFICATIONS, OR OTHER DATA IS NOT TO BE REGARDED BY IMPLICATION OR OTHERWISE AS IN ANY MANNER LICENSING THE HOLDER OR ANY OTHER PERSON OR CORPORATION, OR CONVEYING ANY RIGHTS OR PERMISSION TO MANUFACTURE, USE, OR SELL ANY PATENTED INVENTION THAT MAY IN ANY WAY BE RELATED THERETO.

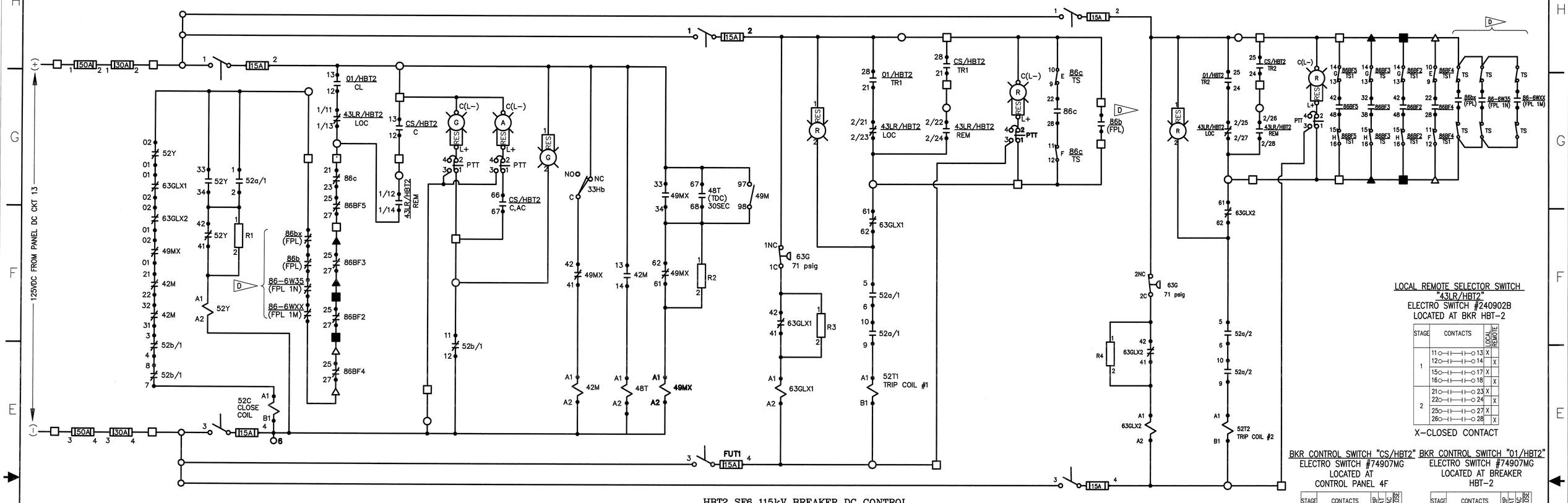

LOCAL REMOTE SELECTOR SWITCH "43LR/HBT2"
ELECTRO SWITCH #240902B
LOCATED AT BKR HBT-2

STAGE	CONTACTS	LOCAL	REMOTE
1	11 — 13	X	
	12 — 14		X
	15 — 17	X	
	16 — 18		X
2	21 — 23	X	
	22 — 24		X
	25 — 27	X	
	26 — 28		X

X–CLOSED CONTACT

BKR CONTROL SWITCH "CS/HBT2"
ELECTRO SWITCH #74907MG
LOCATED AT
CONTROL PANEL 4F

STAGE	CONTACTS	TRIP	NAT	NAC	CLOSE
1	12 — 13				X
	16 — 17				X
2	21 — 28	X			
	24 — 25	X			
3	31 — 32		X	X	
	35 — 36		X	X	
4	41 — 42		X	X	X
5	51 — 52		X	X	X
6	62 — 63			X	X
	66 — 67			X	X
7	71 — 72	X	X		
	75 — 76	X	X		

NAT–NORMAL AFTER TRIP
NAC–NORMAL AFTER CLOSE
X–CLOSED CONTACT

BKR CONTROL SWITCH "01/HBT2"
ELECTRO SWITCH #74907MG
LOCATED AT BREAKER
HBT-2

STAGE	CONTACTS	TRIP	NAT	NAC	CLOSE
1	12 — 13				X
	16 — 17				X
2	21 — 28	X			
	24 — 25	X			
3	31 — 32		X	X	
	35 — 36		X	X	
4	41 — 42		X	X	X
5	51 — 52		X	X	X
6	62 — 63			X	X
	66 — 67			X	X
7	71 — 72	X	X		
	75 — 76	X	X		

NAT–NORMAL AFTER TRIP
NAC–NORMAL AFTER CLOSE
X–CLOSED CONTACT

HBT2 SF6 115kV BREAKER DC CONTROL

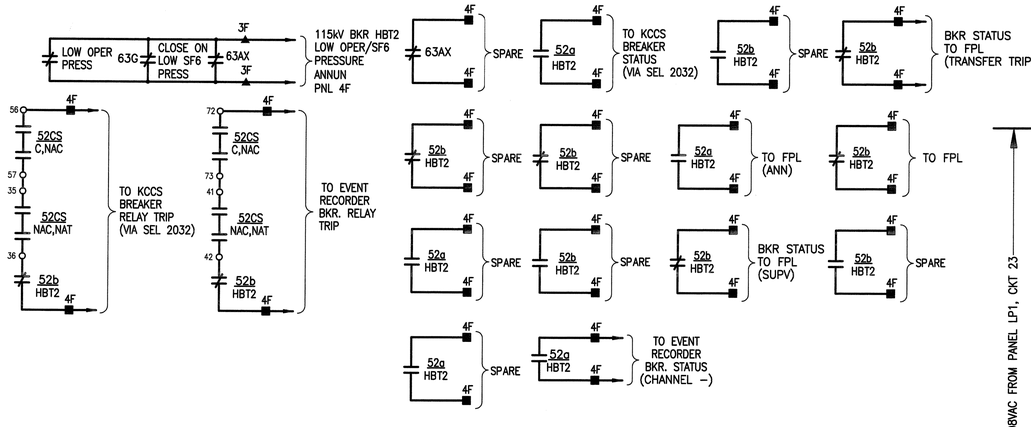

BREAKER AUXILIARY SWITCH CONTACTS

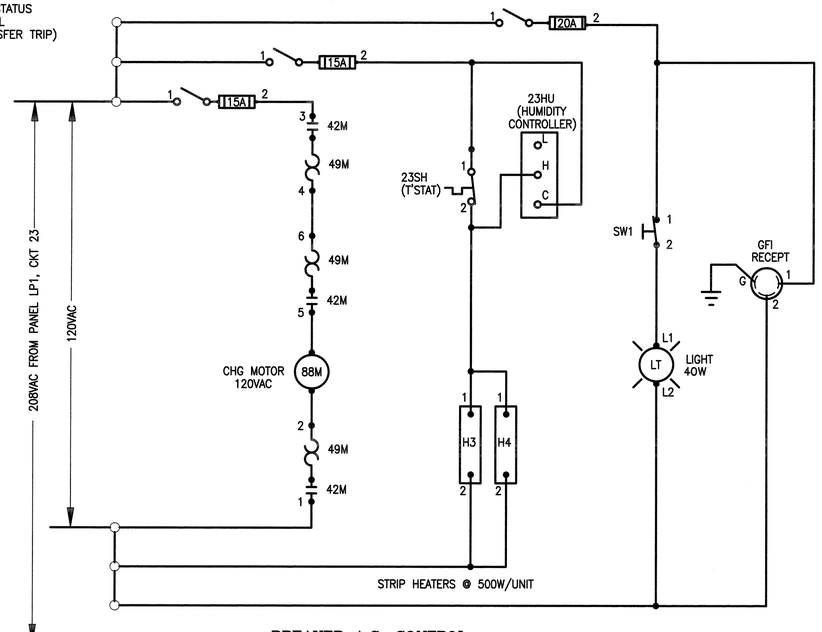

BREAKER A.C. CONTROL

LEGEND:

- TERMINAL AT CONTROL PANEL 1F
- TERMINAL AT CONTROL PANEL 4F
- TERMINAL AT CONTROL PANEL 3F
- TERMINAL AT CONTROL PANEL 4F
- 15A–XX TERMINAL AT PANEL 15A
- ERP–XX TERMINAL AT EVENT RECORDER PANEL
- UCS–59 TERMINAL AT KCCS INTERFACE CABINET UCS–59
- TERMINAL AT 115kV BREAKER HBT2

REFERENCE DRAWINGS

115kV CONTROL SWITCHBOARD WIRING DIAGRAM ..... GEC ALSTHOM DRAWING 394286–WD1 THRU WD4

SPECIFIC NOTES:

A. FOR LEGEND AND GENERAL NOTES, SEE DRAWING E1.

B. DEVICE NUMBERS USED ARE PER IEEE C37.2–1996.

C. EQUIPMENT AND CONNECTIONS SHOWN IN BOLD ARE NEW AND ARE TO BE FURNISHED AND INSTALLED BY THE CONTRACTOR.

D. EQUIPMENT SHOWN SHALL BE FURNISHED AND CONNECTED TO THE STATION COMMON FPL INTERFACE JUNCTION BOX BY FPL. FIELD WIRING BETWEEN THE STATION COMMON FPL INTERFACE JUNCTION BOX AND NASA CONTROL EQUIPMENT SHALL BE PERFORMED BY THE CONTRACTOR. FINAL CONNECTIONS TO FPL EQUIPMENT SHALL BE PERFORMED BY FPL.

SYM.	ZONE	DESCRIPTION	DATE	APPROVED
		REVISIONS		

ENGINEER OF RECORD: LARRY JONES — PE LICENSE NO. 19837

Fred Wilson & Associates, Inc.
Consulting Engineers
C.A. NO. 7188 • 904-398-8636
3970 Hendricks Avenue • Jacksonville, FL 32207

SIGNATURES		DATE
DESIGNED	M. YUDIN	5/09
DRAWN	M. YUDIN	5/09
CHECKED	L. JONES	5/09
SUBMITTED		7/24/09
APPROVED		7/24/09
APPROVED		
APPROVED		
APPROVED		
APPROVED		
APPROVED		

NATIONAL AERONAUTICS AND SPACE ADMINISTRATION
JOHN F. KENNEDY SPACE CENTER, NASA
KENNEDY SPACE CENTER, FLORIDA

MODIFY C–5 SUBSTATION FOR RING BUS CONFIGURATION

115kV BUS TIE BREAKER HBT2
D.C. SCHEMATIC DIAGRAM

A/E FILE No. 0601\0601–25\0601–25.5
FILE: E23.DWG
THIS DRAWING PREPARED BY AutoCAD 2008

E23

FILE NO. | SIZE F | DWG. NO. 79K38551
PROJ. NO. PCN 98778 | SHEET 25

KSC FORM 1–11A (REV 6/91) (C/G 12/93) 09/23/2009 F:\ELECT\0601\0601–25\0601–25.5\E23

NOTICE – WHEN GOVERNMENT DRAWINGS, SPECIFICATIONS, OR OTHER DATA ARE USED FOR ANY PURPOSE OTHER THAN IN CONNECTION WITH A DEFINITELY RELATED GOVERNMENT PROCUREMENT OPERATION, THE UNITED STATES GOVERNMENT THEREBY INCURS NO RESPONSIBILITY NOR ANY OBLIGATION WHATSOEVER; AND THE FACT THAT THE GOVERNMENT MAY HAVE FORMULATED, FURNISHED, OR IN ANY WAY SUPPLIED THE SAID DRAWINGS, SPECIFICATIONS, OR OTHER DATA IS NOT TO BE REGARDED BY IMPLICATION OR OTHERWISE IN ANY MANNER LICENSING THE HOLDER OR ANY OTHER PERSON OR CORPORATION, OR CONVEYING ANY RIGHTS OR PERMISSION TO MANUFACTURE, USE, OR SELL ANY PATENTED INVENTION THAT MAY IN ANY WAY BE RELATED THERETO.

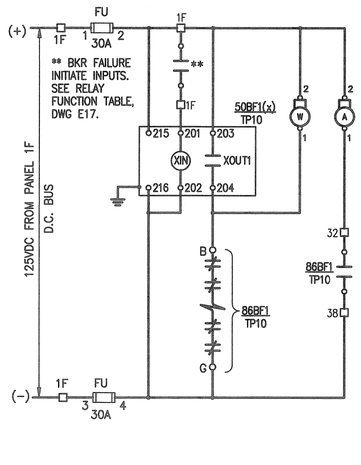

115KV BREAKER FAILURE DC SCHEMATIC (BREAKER TP10)

* SEE BKR FAILURE TRIP CKTS BELOW

C

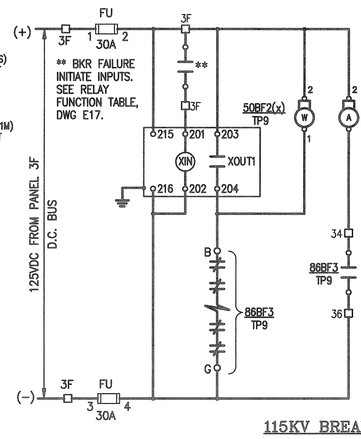

115KV BREAKER FAILURE DC SCHEMATIC (BREAKER TP9)

C

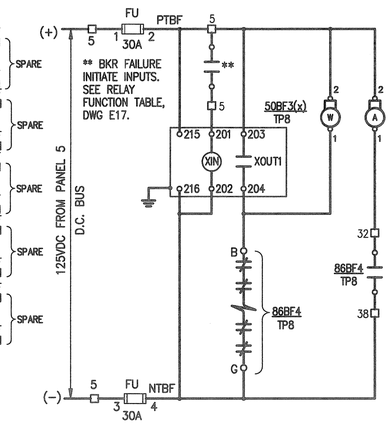

115KV BREAKER FAILURE DC SCHEMATIC (BREAKER TP8)

* SEE BKR FAILURE TRIP CKTS BELOW

C

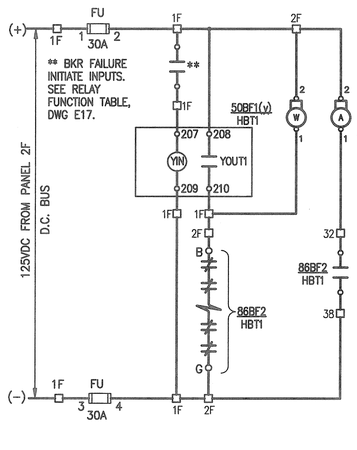

115KV BREAKER FAILURE DC SCHEMATIC (BREAKER HBT1)

* SEE BKR FAILURE TRIP CKTS BELOW

C

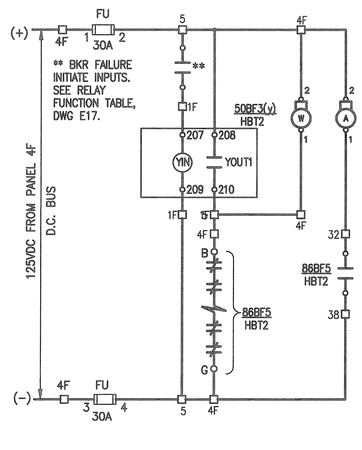

115KV BREAKER FAILURE DC SCHEMATIC (BREAKER HBT2)

* SEE BKR FAILURE TRIP CKTS BELOW C

BREAKER FAILURE LEGEND

1F	TERMINAL AT PANEL 1F
2F	TERMINAL AT PANEL 2F
3F	TERMINAL AT PANEL 3F
4F	TERMINAL AT PANEL 4F
5	TERMINAL AT PANEL 5
86BF	LOCKOUT RELAY WITH HAND RESET FOR 115kKV BREAKER FAILURE SYSTEM
50BF	DUAL UNIVERSAL OVERCURRENT RELAY WITH TIME DELAY

SPECIFIC NOTES:

A. FOR LEGEND AND GENERAL NOTES, SEE DRAWING E1.

B. DEVICE NUMBERS USED ARE PER IEEE C37.2–1996.

C. EQUIPMENT AND CONNECTIONS SHOWN IN BOLD ARE NEW AND ARE TO BE PROVIDED BY THE CONTRACTOR. FIELD WIRING BETWEEN NASA CONTROL EQUIPMENT AND FPL CONTROL EQUIPMENT SHALL BE ROUTED TO THE STATION COMMON FPL INTERFACE JUNCTION BOX BY THE CONTRACTOR. FINAL CONNECTIONS TO FPL EQUIPMENT SHALL BE PERFORMED BY FPL.

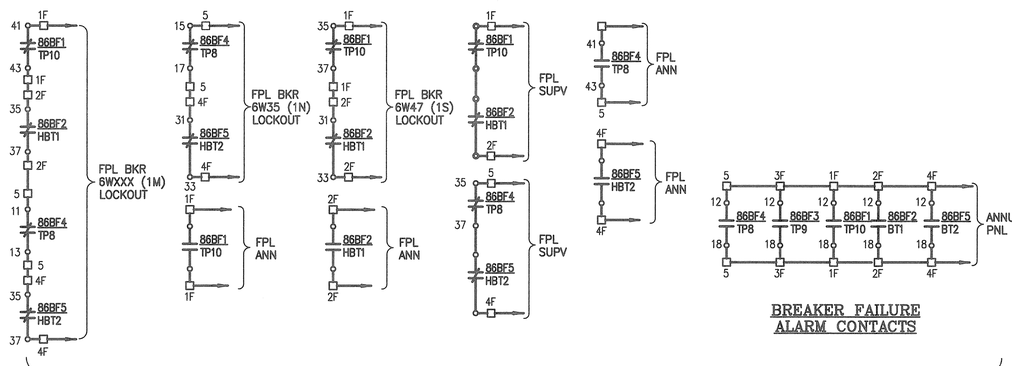

115KV BREAKER FAILURE RELAYS – ADDITIONAL CONTACTS

C

BREAKER FAILURE ALARM CONTACTS

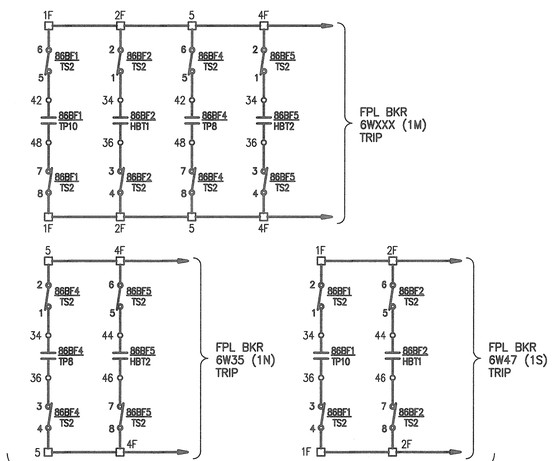

115KV BREAKER FAILURE TRIPCIRCUITSS TO FPL

C

SYM.	ZONE	DESCRIPTION	DATE	APPROVED
		REVISIONS		

ENGINEER OF RECORD: LARRY JONES — PE LICENSE NO. 19837

Fred Wilson & Associates, Inc. Consulting Engineers
C.A. NO. 7188 • 904-398-8636
3970 Hendricks Avenue • Jacksonville, FL 32207

SIGNATURES		DATE
DESIGNED	M. YUDIN	5/09
DRAWN	M. YUDIN	5/09
CHECKED	L. JONES	5/09
SUBMITTED		9/24/09
APPROVED		9/24/09
APPROVED		
APPROVED		
APPROVED		
APPROVED		
APPROVED		

NATIONAL AERONAUTICS AND SPACE ADMINISTRATION
JOHN F. KENNEDY SPACE CENTER, NASA
KENNEDY SPACE CENTER, FLORIDA

MODIFY C–5 SUBSTATION FOR RING BUS CONFIGURATION

115kV BREAKER FAILURE SYSTEM
D.C. SCHEMATIC DIAGRAMS

FILE NO. | SIZE F | DWG. NO. 79K38551

PROJ. NO. PCN 98778 | SHEET 26

A/E FILE No. 0601\0601–25\0601–25.5
FILE: E24.DWG
THIS DRAWING PREPARED BY AutoCAD 2008

E24

NOTICE — WHEN GOVERNMENT DRAWINGS, SPECIFICATIONS, OR OTHER DATA ARE USED FOR ANY PURPOSE OTHER THAN IN CONNECTION WITH A DEFINITELY RELATED GOVERNMENT PROCUREMENT OPERATION, THE UNITED STATES GOVERNMENT THEREBY INCURS NO RESPONSIBILITY NOR ANY OBLIGATION WHATSOEVER; AND THE FACT THAT THE GOVERNMENT MAY HAVE FORMULATED, FURNISHED, OR IN ANY WAY SUPPLIED THE SAID DRAWINGS, SPECIFICATIONS OR OTHER DATA IS NOT TO BE REGARDED BY IMPLICATION OR OTHERWISE IN ANY MANNER LICENSING THE HOLDER OR ANY OTHER PERSON OR CORPORATION, OR CONVEYING ANY RIGHTS OR PERMISSION TO MANUFACTURE, USE, OR SELL ANY PATENTED INVENTION THAT MAY IN ANY WAY BE RELATED THERETO.

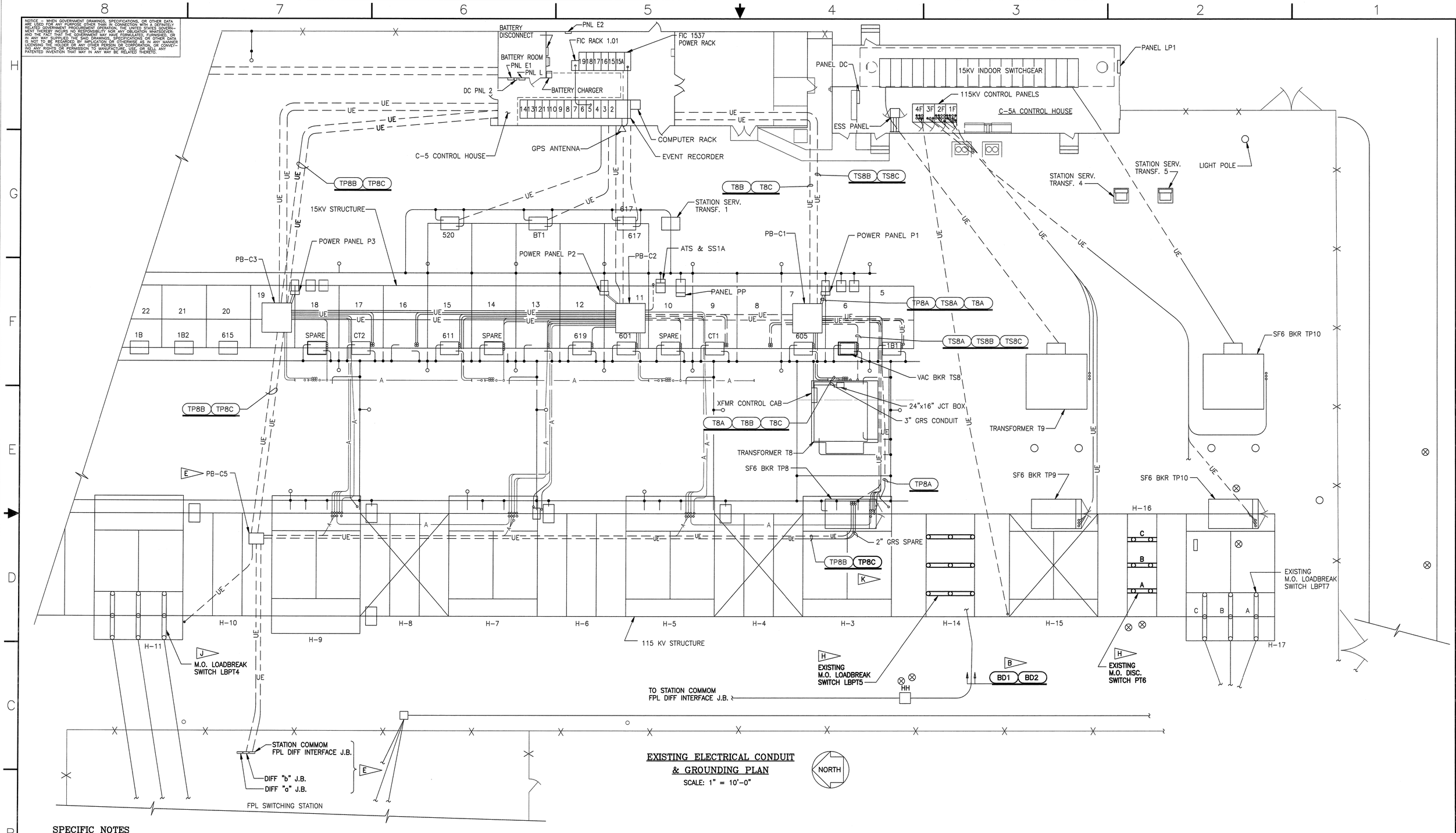

EXISTING ELECTRICAL CONDUIT & GROUNDING PLAN

SCALE: 1" = 10'-0"

SPECIFIC NOTES

A. FOR LEGEND AND GENERAL NOTES, SEE DRAWING E1.

B. REMOVE MULTICONDUCTOR CT AND CONTOL CABLES ASSOCIATED WITH BREAKERS TP9 AND TP10 BACK TO CONTROL SWITCHBOARD 4F.

C. CONDUIT ROUTING INFORMATION TAKEN FROM NASA-KSC FACILITY RECORD DRAWINGS NO. A39.19.00.0ADE015.00 (FILE NO. 203-112), DRAWING NO. 203-636 AND DRAWING NO. 79K36457, SHEETS 1 THROUGH 38.

D. HAND DIG IN ALL AREAS INSIDE THE SUBSTATION YARD. CAREFULLY REMOVE & STOCKPILE GRAVEL AND REPLACE AFTER BACKFILLING. AVOID DAMAGE TO STATION GROUND GRID CONDUCTORS.

E. COORDINATE ALL WORK WITH THE ISC AND FPL BEFORE REMOVING OR CHANGING ANY OF THE DIFFERENTIAL INTERCONNECTING CABLES.

F. ANY OPERATION WHICH DISABLES EXISTING CONTROL OR CT CIRCUITS SHALL BE PERFORMED WITH THE BREAKERS DE-ENERGIZED. ONLY ONE BREAKER MAY BE DE-ENERGIZED AT ANY ONE TIME. ALL OPEN/CLOSE OPERATIONS SHALL BE SCHEDULED IN ADVANCE AND APPROVED IN WRITING BY THE ISC.

G. EXISTING 115KV & 13.8KV BUS PHASING: C-B-A NORTH TO SOUTH, C-B-A EAST TO WEST.

H. THE EXISTING M.O. SWITCHES LBPT5 AND PT6 AND ALL THEIR ASSOCIATED ACCESSORIES SHALL BE REMOVED AND RETURNED TO THE GOVENMENT.

J. REMOVE AND RELOCATE M.O. SWITCH LBPT4, ALL ASSOCIATED EQUIPMENT AND STEEL STRUCTURE FROM BAY H-11 TO BAY H-5.

K. CABLES TP8-R1 AND TP8-R2 SHALL BE DISCONNECTED AND REMOVED FROM BREAKER TP8 TO FPL BUS DIFF JUNCTION BOX. (CABLES ARE INSTALLED IN DUCT TP8C).

GRAPHIC SCALE

1"= 10' 10' 0' 10' 20' 30'

SYM.	ZONE	DESCRIPTION	DATE	APPROVED
		REVISIONS		

ENGINEER OF RECORD: LARRY JONES PE LICENSE NO. 19837

Fred Wilson & Associates, Inc. Consulting Engineers
C.A. NO. 7188 • 904-398-8636
3970 Hendricks Avenue • Jacksonville, FL 32207

SIGNATURES		DATE
DESIGNED	M. YUDIN	5/09
DRAWN	M. YUDIN	5/09
CHECKED	L. JONES	5/09
SUBMITTED		9/24/09
APPROVED		9/24/09
APPROVED		
APPROVED		
APPROVED		
APPROVED		
APPROVED		

NATIONAL AERONAUTICS AND SPACE ADMINISTRATION
JOHN F. KENNEDY SPACE CENTER, NASA
KENNEDY SPACE CENTER, FLORIDA

MODIFY C-5 SUBSTATION FOR RING BUS CONFIGURATION

EXISTING ELECTRICAL CONDUIT AND GROUNDING PLAN

FILE NO. | SIZE F | DWG. NO. 79K38551

PROJ. NO. PCN 98778 | SHEET 27

A/E FILE No. 0601\0601-25\0601-25.5
FILE: E25.DWG
THIS DRAWING PREPARED BY AutoCAD 2008

E25

NOTICE — WHEN GOVERNMENT DRAWINGS, SPECIFICATIONS, OR OTHER DATA ARE USED FOR ANY PURPOSE OTHER THAN IN CONNECTION WITH A DEFINITELY RELATED GOVERNMENT PROCUREMENT OPERATION, THE UNITED STATES GOVERNMENT THEREBY INCURS NO RESPONSIBILITY NOR ANY OBLIGATION WHATSOEVER, AND THE FACT THAT THE GOVERNMENT MAY HAVE FORMULATED, FURNISHED, OR IN ANY WAY SUPPLIED THE SAID DRAWINGS, SPECIFICATIONS OR OTHER DATA IS NOT TO BE REGARDED BY IMPLICATION OR OTHERWISE IN ANY MANNER LICENSING THE HOLDER OR ANY OTHER PERSON OR CORPORATION, OR CONVEYING ANY RIGHTS OR PERMISSION TO MANUFACTURE, USE, OR SELL ANY PATENTED INVENTION THAT MAY IN ANY WAY BE RELATED THERETO.

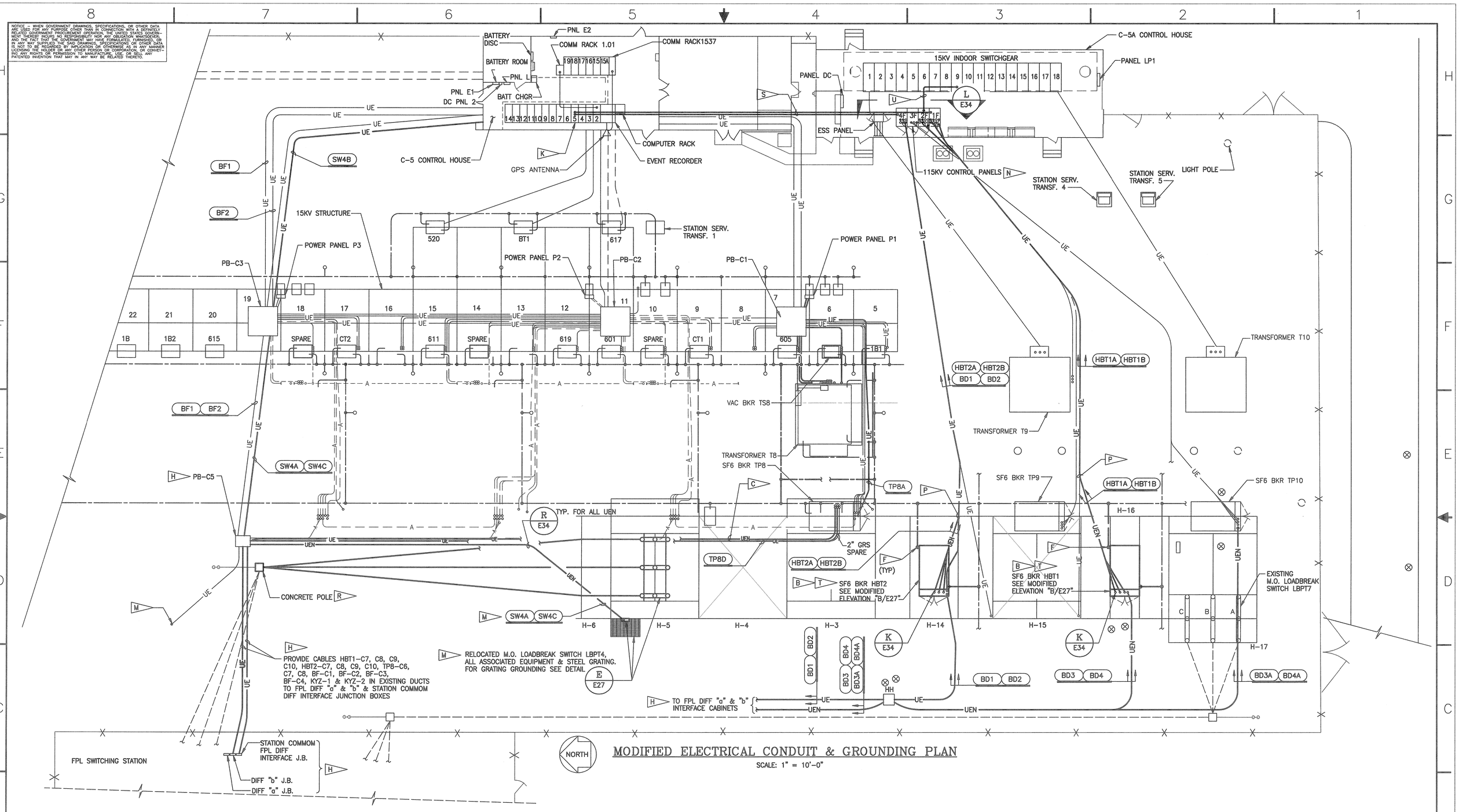

MODIFIED ELECTRICAL CONDUIT & GROUNDING PLAN

SCALE: 1" = 10'-0"

SPECIFIC NOTES

A. FOR LEGEND AND GENERAL NOTES, SEE DRAWING E1.

B. PROVIDE EQUIPMENT.

C. INTERCEPT EXISTING CONDUIT AT TP8 LOCATION AND PROVIDE 2" SCH. 80 PVC CONDUIT TO BREAKER TP8. PROVIDE CABLES IN CONDUITS TP8B AND TP8C FROM CONTROL PANEL 5 TO BREAKER TP8. CABLES ROUTED FROM CONTROL PANEL 5 TO PB-C5 VIA PB-C3 IN AVAILABLE CONDUITS.

D. CONDUIT ROUTING INFORMATION TAKEN FROM NASA-KSC FACILITY RECORD DRAWINGS NO. A39.19.00.0ADE015.00 (FILE NO. 203-112), DRAWING NO. 203-636 AND DRAWING NO. 79K36457, SHEETS 1 THROUGH 38..

E. HAND DIG IN ALL AREAS INSIDE THE SUBSTATION YARD. CAREFULLY REMOVE & STOCKPILE GRAVEL AND REPLACE AFTER BACKFILLING. AVOID DAMAGE TO STATION GROUND GRID CONDUCTORS.

F. PROVIDE #4/0 BSD COPPER GROUND CABLE & EXOTHERMIC CONNECTIONS TO EXISTING GROUND GRID.

G. PROVIDE WIRE MARKERS FOR CONTROLS, METERING, RELAYING AND ACCESSORIES CONDUCTORS AT EACH END. WIRE MARKERS SHALL BE WHITE PLASTIC TUBING HEAT STAMPED WITH BLACK BLOCK TYPE LETTERS. ALL WIRE MARKERS SHALL INDICATE THE DEVICE OR EQUIPMENT, INCLUDING SPECIFIC TERMINAL NUMBER TO WHICH THE REMOTE END OF THE WIRE IS ATTACHED, AS WELL AS THE TERMINAL NUMBER TO WHICH THE WIRE IS DIRECTLY ATTACHED (NEAR END/FAR END).

H. COORDINATE ALL WORK WITH THE ISC AND FPL BEFORE REMOVING OR CHANGING ANY OF THE DIFFERENTIAL INTERCONNECTING CABLES.

J. ANY OPERATION WHICH DISABLES EXISTING CONTROL OR CT CIRCUITS SHALL BE PERFORMED WITH THE BREAKERS DE-ENERGIZED. ONLY ONE BREAKER MAY BE DE-ENERGIZED AT ANY ONE TIME. ALL OPEN/CLOSE OPERATIONS SHALL BE SCHEDULED IN ADVANCE AND APPROVED IN WRITING BY THE ISC CONTRACTOR.

K. FOR CONTROL PANEL NO. 5 MODIFICATIONS, SEE DRAWING E28.

L. EXISTING 115KV & 13.8KV BUS PHASING: C-B-A NORTH TO SOUTH, C-B-A EAST TO WEST.

M. THE CONTRACTOR SHALL PROVIDE NEW 2" PVC CONDUITS FROM PB-C5 TO LBPT4 AND PROVIDE NEW CONTROL CABLES FROM THE CONTROL BUILDING TO LBPT4 VIA EXISTING SPARE & NEW CONDUITS. THE CONTRACTOR CAN THEN REMOVE THE EXISTING CONTROL WIRING FROM THE EXISTING CONDUITS ROUTED FROM THE CONTROL BUILDING TO BAY H-11. CONDUIT SW4C SHALL BE SPARE FROM LBTP4 TO PULL BOX C5 AND USED FOR CABLES KYZ-1 AND KYZ-2 FROM

N. FOR CONTROL PANEL MODIFICATIONS, SEE DRAWING E30.

P. INTERCEPT EXISTING CONDUITS AND EXTEND TO BREAKER CONTROL CABINETS

R. INSTALLATION OF TRANSMISSION POLE, GUYS, HARDWARE, TRANSMISSION LINE, JUMPERS AND TERMINATIONS TO LBPT4 SHALL BE COMPLETED BY FPL.

S. PROVIDE CABLES BF-C1, BF-C2, BF-C3 & BF-C4 IN (2) 2" GRS CONDUITS. (BREAKER FAILURE, TRIPS & LOCKOUTS).

T. PROVIDE CONTROL CABLES FROM CONTROL PANELS 1F THROUGH 4F TO NEW BREAKERS HBT1 AND HBT2 IN NEW AND EXISTING DUCTS/CONDUITS. SHOULD THE EXISTING DUCTS/CONDUITS PROVE TO BE UNUSABLE, AT THE CONTRACTOR'S OPTION, THE CONTRACTOR SHALL PROVIDE SCHEDULE 80 PVC CONDUIT (SIZED AS REQUIRED) FROM CONTROL BUILDING VAULT TO EQUIPMENT TO INSTALL THE NEW CONTROL CABLES. TRENCHES FOR NEW CONDUITS SHALL BE HAND DUG.

U. PROVIDE 8#12 IN 3/4" GRS CONDUIT FOR HBT1 AND HBT2 STATUS INPUTS TO CP4 IN CUBICLE 9A.

GRAPHIC SCALE

1"= 10' 10' 0' 10' 20' 30'

A/E FILE No. 0601\0601-25\0601-25.5
FILE: E26.DWG
THIS DRAWING PREPARED BY AutoCAD 2008

E26

SYM.	ZONE	DESCRIPTION	DATE	APPROVED
		REVISIONS		

ENGINEER OF RECORD: LARRY JONES — PE LICENSE NO. 19837

Fred Wilson & Associates, Inc.
Consulting Engineers
C.A. NO. 7188 • 904-398-8636
3970 Hendricks Avenue • Jacksonville, FL 32207

SIGNATURES		DATE
DESIGNED	M. YUDIN	5/09
DRAWN	R. LENOVER	5/09
CHECKED	L. JONES	5/09
SUBMITTED		9/24/09
APPROVED		9/24/09
APPROVED		
APPROVED		
APPROVED		
APPROVED		
APPROVED		

NATIONAL AERONAUTICS AND SPACE ADMINISTRATION
JOHN F. KENNEDY SPACE CENTER, NASA
KENNEDY SPACE CENTER, FLORIDA

MODIFY C-5 SUBSTATION FOR RING BUS CONFIGURATION

MODIFIED ELECTRICAL CONDUIT AND GROUNDING PLAN

FILE NO.	SIZE	DWG. NO.
	F	79K38551
PROJ. NO. PCN 98778		SHEET 28

NOTICE — WHEN GOVERNMENT DRAWINGS, SPECIFICATIONS, OR OTHER DATA ARE USED FOR ANY PURPOSE OTHER THAN IN CONNECTION WITH A DEFINITELY RELATED GOVERNMENT PROCUREMENT OPERATION, THE UNITED STATES GOVERNMENT THEREBY INCURS NO RESPONSIBILITY NOR ANY OBLIGATION WHATSOEVER; AND THE FACT THAT THE GOVERNMENT MAY HAVE FORMULATED, FURNISHED, OR IN ANY WAY SUPPLIED THE SAID DRAWINGS, SPECIFICATIONS, OR OTHER DATA IS NOT TO BE REGARDED BY IMPLICATION OR OTHERWISE AS IN ANY MANNER LICENSING THE HOLDER OR ANY OTHER PERSON OR CORPORATION, OR CONVEYING ANY RIGHTS OR PERMISSION TO MANUFACTURE, USE OR SELL ANY PATENTED INVENTION THAT MAY IN ANY WAY BE RELATED THERETO.

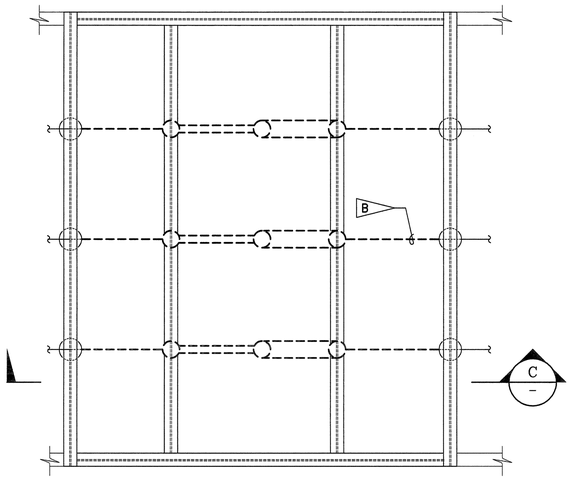

EXISTING PLAN – BAY H14
(BAY H16 SIMILAR)
SCALE: 1/4" = 1'-0"

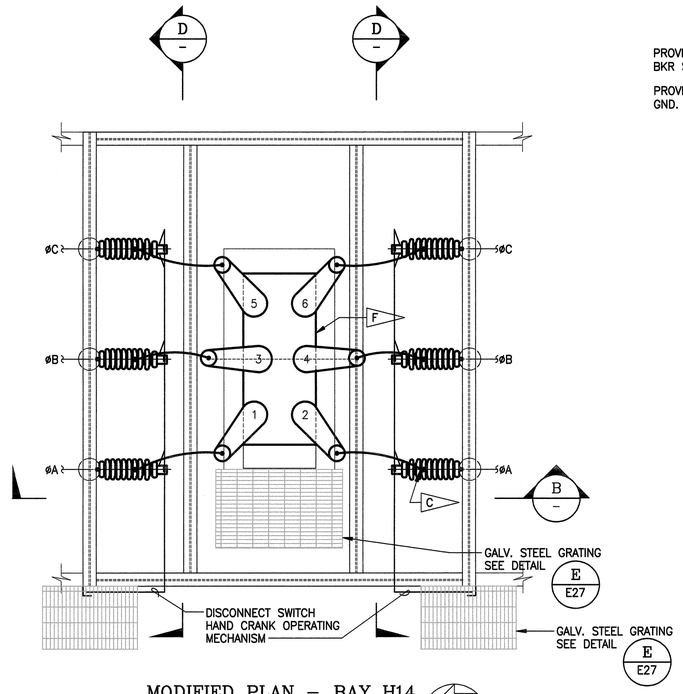

MODIFIED PLAN – BAY H14
(BAY H16 SIMILAR)
SCALE: 1/4" = 1'-0"

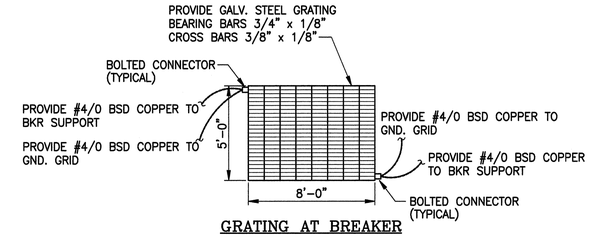

GRATING AT BREAKER

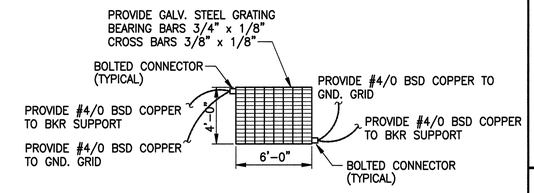

GRATING AT DISCONNECT

DETAIL E
NOT TO SCALE
E26 E27

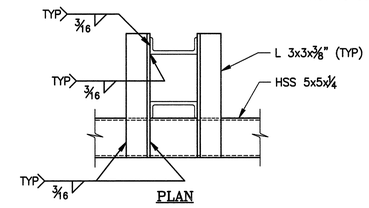

PLAN

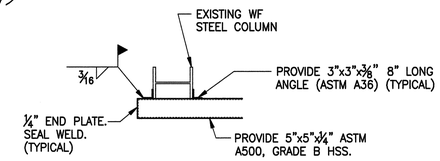

PLAN

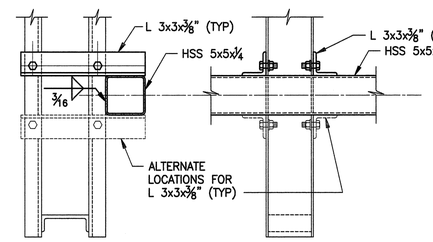

SIDE VIEW ELEVATION

DETAIL P
NOT TO SCALE

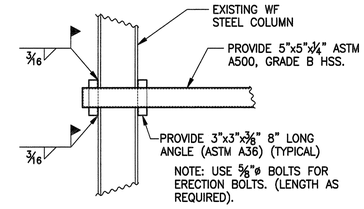

ELEVATION

DETAIL F
NOT TO SCALE

SPECIFIC NOTES:

A. FOR LEGEND & GENERAL NOTES, SEE DRAWING E1.

B. REMOVE BUS SUPPORT INSULATORS, COPPER BUS (LENGTHS AS REQUIRED) & FITTINGS.

C. PROVIDE COPPER FITTINGS & COUPLINGS AS REQUIRED.

D. EXISTING EQUIPMENT TO REMAIN.

E. PROVIDE 1200 AMP, SF6 CIRCUIT BREAKER & 1200 AMP, 3PST, DOUBLE END BREAK GROUP OPERATED DISCONNECT

F. REMOVE LBPT5 AND OPERATOR AND RETURN TO THE GOVERNMENT. (SIMILAR FOR PT6 IN BAY H16).

G. (306) REFERS TO LIST OF EQUIPMENT. SEE DRAWING E31.

H. EXISTING 115KV & 13.8KV BUS PHASING: C–B–A NORTH TO SOUTH, C–B–A EAST TO WEST.

J. ADJUST DIMENSION TO SUIT EQUIPMENT SUPPLIED.

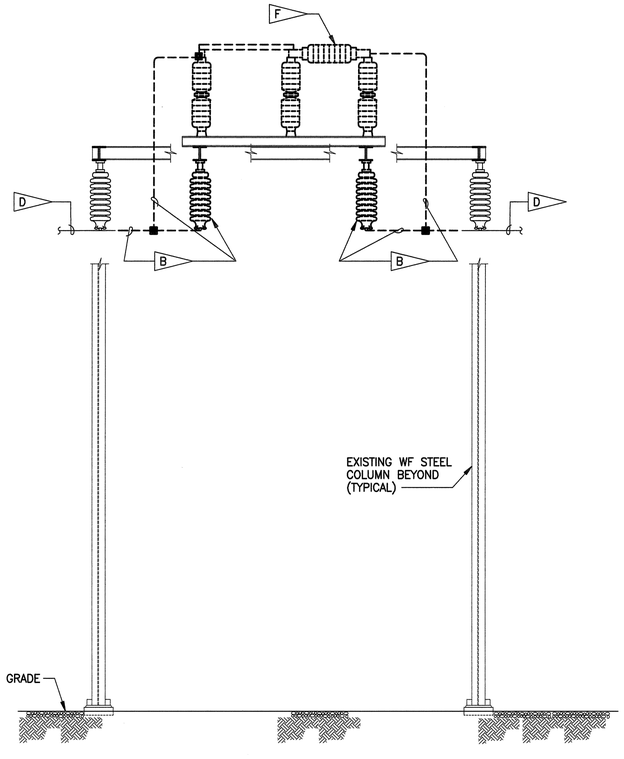

EXISTING ELEVATION C
SCALE: 1/4" = 1'-0"

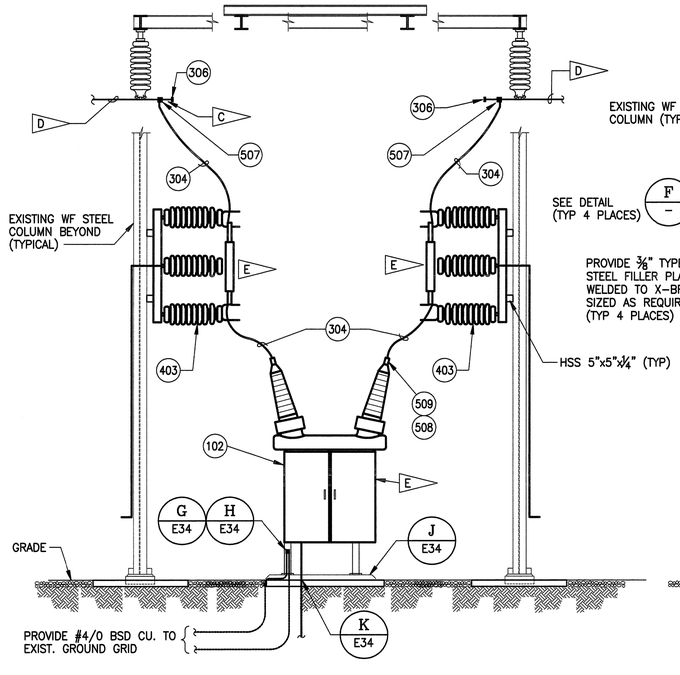

MODIFIED ELEVATION B
SCALE: 1/4" = 1'-0"
E3 E27

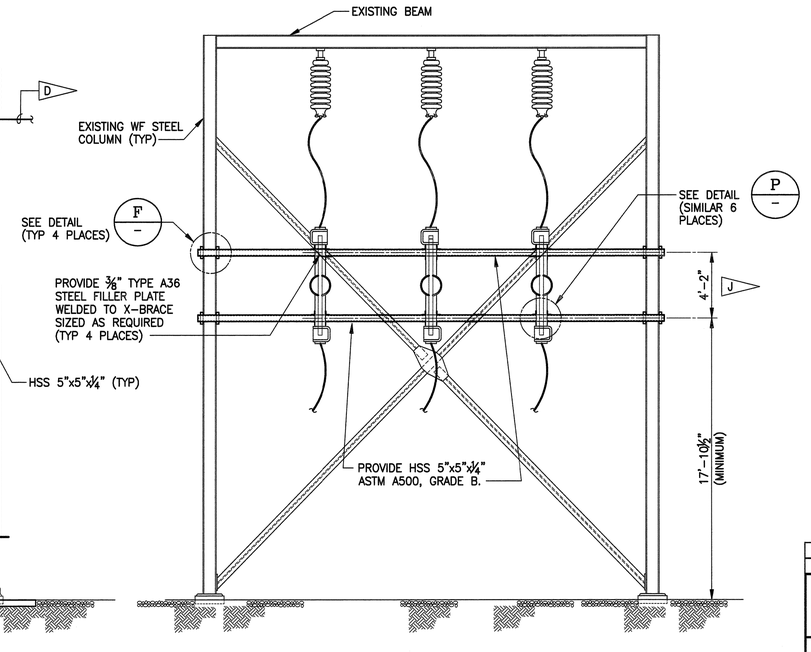

ELEVATION D
SCALE: 1/4" = 1'-0"
(SWITCH OPERATOR PLATFORMS NOT SHOWN)

GRAPHIC SCALE
1/4" = 1'-0"
4' 0' 4' 8' 12'

SYM.	ZONE	DESCRIPTION	DATE	APPROVED
		REVISIONS		

ENGINEER OF RECORD: LARRY JONES — PE LICENSE NO. 19837
Fred Wilson & Associates, Inc. Consulting Engineers
C.A. NO. 7188 • 904-398-8636
3970 Hendricks Avenue • Jacksonville, FL 32207

SIGNATURES		DATE
DESIGNED	M. YUDIN	5/09
DRAWN	B. GEMMELL	5/09
CHECKED	L. JONES	5/09
SUBMITTED		9/24/09
APPROVED		9/24/09
APPROVED		
APPROVED		
APPROVED		
APPROVED		
APPROVED		

NATIONAL AERONAUTICS AND SPACE ADMINISTRATION
JOHN F. KENNEDY SPACE CENTER, NASA
KENNEDY SPACE CENTER, FLORIDA

MODIFY C–5 SUBSTATION FOR RING BUS CONFIGURATION

115kV BUS TIE BREAKERS HBT1 AND HBT2
PLAN AND ELEVATIONS

FILE NO. — SIZE F — DWG. NO. 79K38551
PROJ. NO. PCN 98778 — SHEET 29

A/E FILE No. 0601\0601-25\0601-25.5
FILE: E27.DWG
THIS DRAWING PREPARED BY AutoCAD 2008

E27

NOTICE – WHEN GOVERNMENT DRAWINGS, SPECIFICATIONS, OR OTHER DATA ARE USED FOR ANY PURPOSE OTHER THAN IN CONNECTION WITH A DEFINITELY RELATED GOVERNMENT PROCUREMENT OPERATION, THE UNITED STATES GOVERNMENT THEREBY INCURS NO RESPONSIBILITY NOR ANY OBLIGATION WHATSOEVER; AND THE FACT THAT THE GOVERNMENT MAY HAVE FORMULATED, FURNISHED, OR IN ANY WAY SUPPLIED THE SAID DRAWINGS, SPECIFICATIONS OR OTHER DATA IS NOT TO BE REGARDED BY IMPLICATION OR OTHERWISE IN ANY MANNER LICENSING THE HOLDER OR ANY OTHER PERSON OR CORPORATION, OR CONVEYING ANY RIGHTS OR PERMISSION TO MANUFACTURE, USE, OR SELL ANY PATENTED INVENTION THAT MAY IN ANY WAY BE RELATED THERETO.

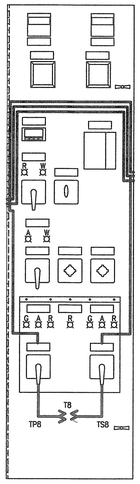

CONTROL PANEL 5
EXISTING DOOR ELEVATION (F)
SCALE: 1" = 1'-0"

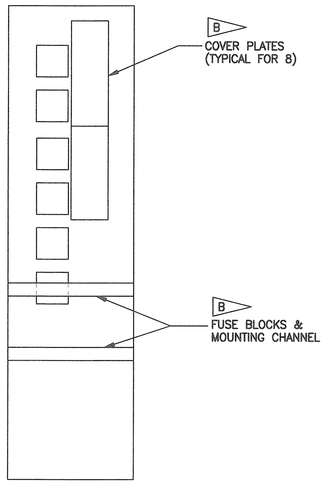

CONTROL PANEL 5
EXISTING REAR ELEVATION
SCALE: 1" = 1'-0"

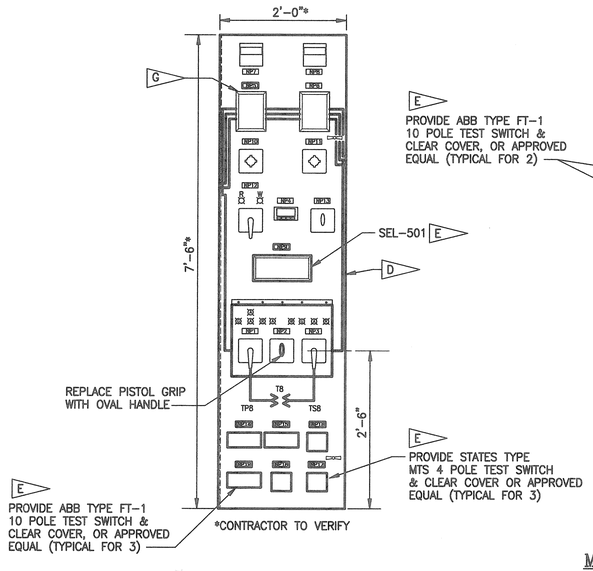

CONTROL PANEL 5
MODIFIED DOOR ELEVATION (E)
SCALE: 1" = 1'-0"

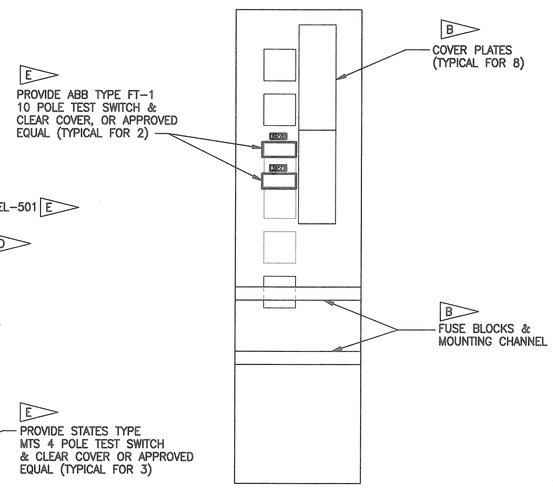

CONTROL PANEL 5
MODIFIED REAR ELEVATION
SCALE: 1" = 1'-0"

NAMEPLATE SCHEDULE – MODIFIED (C)

NAMEPLATE NUMBER	DESCRIPTION		
	1st LINE	2nd LINE	3rd LINE
NP 1	115KV BREAKER TP8	CONTROL SWITCH	–
NP 2	86T–T8	TRANSFORMER DIFF.	LOCKOUT
NP 3	13.8KV BREAKER TS8	CONTROL SWITCH	–
NP 4	TRANSFORMER T8	LOAD TAP CHANGER	POSITION
NP 5	50/51N	OVERCURRENT	BREAKER TS8
NP 6	TRANSFORMER T8	TRANSFORMER DIFF. 87T	–
NP 7	TRANSFORMER T8	SECONDARY AMPERES	–
NP 8	TRANSFORMER T8	SECONDARY VOLTAGE	–
NP 9	50BF3	BREAKER FAILURE	BREAKER TP8
NP 10	AMMETER SWITCH	øA øB øC	–
NP 11	VOLTMETER SWITCH	øA–B øB–C øC–A	–
NP 12	XFMR T8 LTC 43RL	–	–
NP 13	XFMR T8 LTC 43AM		–
NP 14	87T8/TS1	SEE DETAIL M/–	–
NP 15	87T8/TS2		–
NP 16	87T8/TS3		–
NP 17	50BF3/TS1		–
NP 18	50BF3/TS2		–
NP 19	BKR TS8–50/51		–
NP 20	86BF4 DC OUTPUTS		–
NP 21	86T8 DC OUTPUTS		–

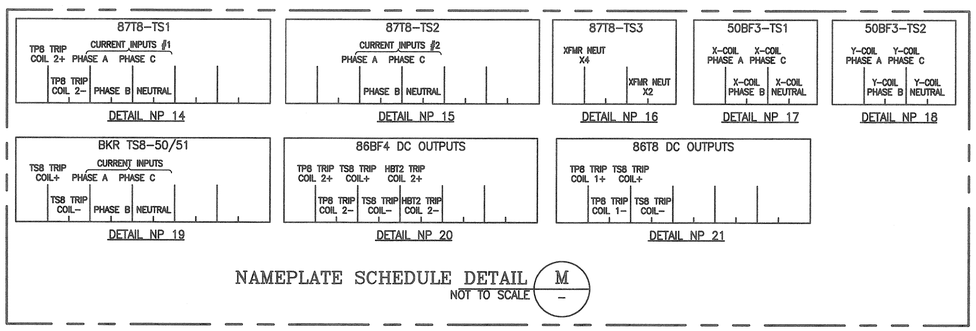

NAMEPLATE SCHEDULE DETAIL (M/–)
NOT TO SCALE

SPECIFIC NOTES:

A. FOR LEGEND AND GENERAL NOTES, SEE DRAWING E1.

(B) EXISTING EQUIPMENT.

(C) PROVIDE NAMEPLATES FOR EQUIPMENT. NAMEPLATES SHALL BE 1"x3"x⅛" WITH BEVELLED EDGE, ENGRAVED WITH 3/16" BLOCK LETTERING AND FABRICATED FROM WHITE PLASTIC LAMINATE OVER A BLACK CORE. FASTEN TO PANEL WITH #6–32 STAINLESS STEEL SCREWS. (NAMEPLATES 20 AND 21 SHALL BE 1"x6"x⅛").

(D) PROVIDE A HINGED PANEL DOOR (PAINTED TO MATCH EXISTING PANEL DOORS) & A MIMIC BUS TO MATCH NEW CONFIGURATION. MIMIC BUS SHALL BE FABRICATED FROM ⅜" BLUE PLASTIC LAMINATE (115kV) & ORANGE PLASTIC LAMINATE (13.8kV). FASTEN TO DOOR WITH #6–32 STAINLESS STEEL SCREWS.

(E) EQUIPMENT SHOWN IN BOLD IS NEW. AND IS TO BE PROVIDED BY THE CONTRACTOR.

(F) THE CONTRACTOR SHALL REMOVE ALL EQUIPMENT FROM THE EXISTING DOOR AND REINSTALL AS SHOWN ON THE MODIFIED DOOR ELEVATION.

(G) THE CONTRACTOR SHALL PROVIDE AN EYEBOLT TO ATTACH A RELAY HANG TAG (LOTO) ADJACENT TO THE RELAY.

REFERENCE DRAWINGS

NEWKIRK/SELAH PANEL NAMEPLATE SCHEDULE_____84233–NP
NEWKIRK/SELAH PANEL 5 AND PANEL 2 LAYOUTS_____84233–P1

GRAPHIC SCALE
1" = 1'–0" 1' 0' 1' 2' 3'

SYM.	ZONE	DESCRIPTION	DATE	APPROVED
		REVISIONS		

ENGINEER OF RECORD: LARRY JONES — PE LICENSE NO. 19837
Fred Wilson & Associates, Inc.
Consulting Engineers
C.A. NO. 7188 • 904-398-8636
3970 Hendricks Avenue • Jacksonville, FL 32207

SIGNATURES		DATE
DESIGNED	M. YUDIN	5/09
DRAWN	R. LENOVER	5/09
CHECKED	L. JONES	5/09
SUBMITTED		9/24/09
APPROVED		9/24/09
APPROVED		
APPROVED		
APPROVED		
APPROVED		
APPROVED		

NATIONAL AERONAUTICS AND SPACE ADMINISTRATION
JOHN F. KENNEDY SPACE CENTER, NASA
KENNEDY SPACE CENTER, FLORIDA

MODIFY C–5 SUBSTATION FOR RING BUS CONFIGURATION

TRANSFORMER T8, BREAKERS TP8 AND TS8 EXISTING/MODIFIED CONTROL PANEL 5 ARRANGEMENT

FILE NO. | SIZE F | DWG. NO. 79K38551
PROJ. NO. PCN 98778 | SHEET 30

A/E FILE No. 0601\0601–25\0601–25.5
FILE: E28.DWG
THIS DRAWING PREPARED BY AutoCAD 2008

E28

NOTICE – WHEN GOVERNMENT DRAWINGS, SPECIFICATIONS, OR OTHER DATA ARE USED FOR ANY PURPOSE OTHER THAN IN CONNECTION WITH A DEFINITELY RELATED GOVERNMENT PROCUREMENT OPERATION, THE UNITED STATES GOVERNMENT THEREBY INCURS NO RESPONSIBILITY NOR ANY OBLIGATION WHATSOEVER; AND THE FACT THAT THE GOVERNMENT MAY HAVE FORMULATED, FURNISHED, OR IN ANY WAY SUPPLIED THE SAID DRAWING, SPECIFICATION, OR OTHER DATA IS NOT TO BE REGARDED BY IMPLICATION OR OTHERWISE AS IN ANY MANNER LICENSING THE HOLDER OR ANY OTHER PERSON OR CORPORATION, OR CONVEYING ANY RIGHTS OR PERMISSION TO MANUFACTURE, USE, OR SELL ANY PATENTED INVENTION THAT MAY IN ANY WAY BE RELATED THERETO.

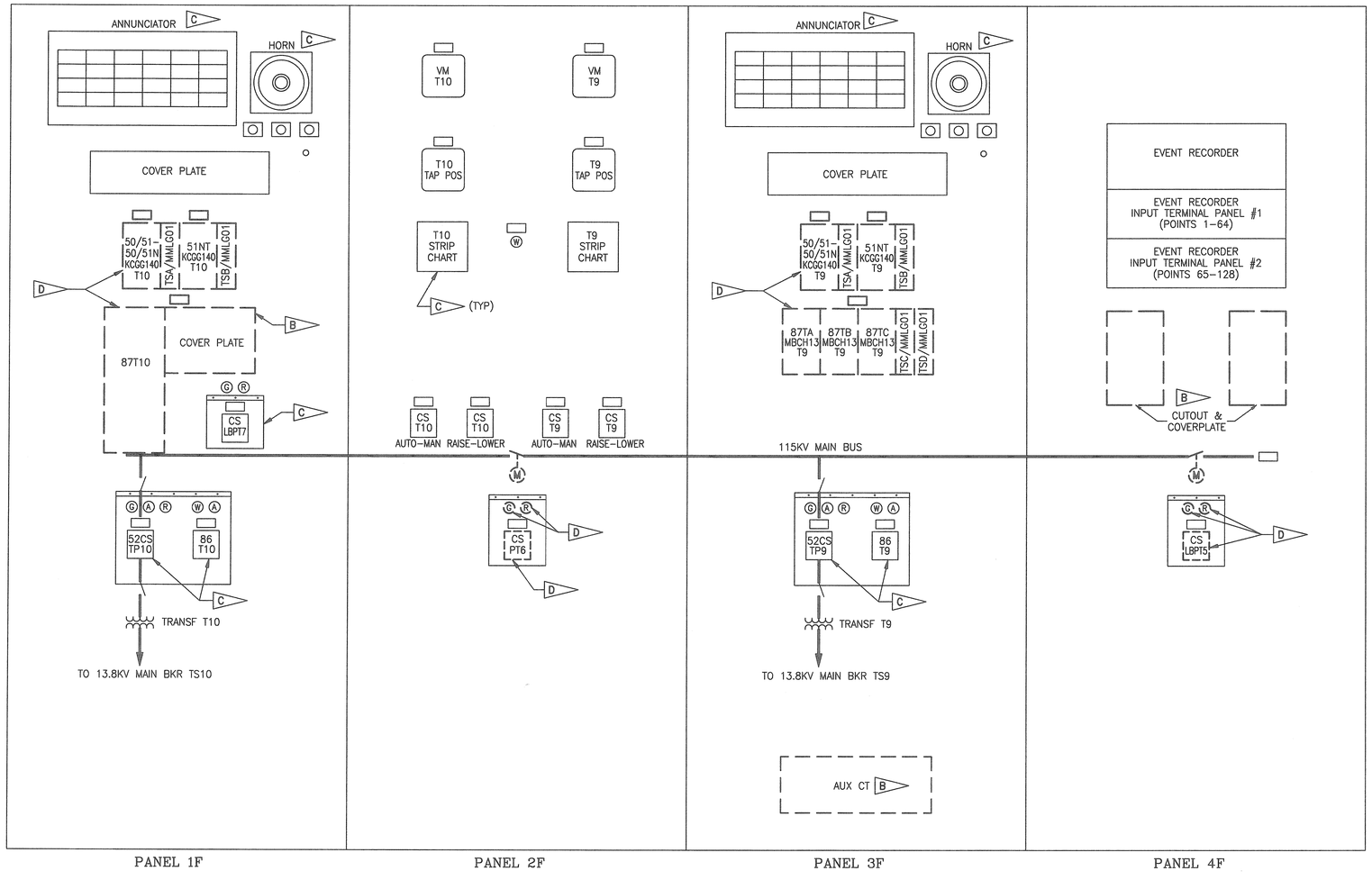

EXISTING 115KV CONTROL SWITCHBOARD FRONT ELEVATION

NOT TO SCALE

(PANELS LOCATED IN C-5A CONTROL BUILDING)

SPECIFIC NOTES:

A. FOR LEGEND AND GENERAL NOTES, SEE DRAWING E1.

B REMOVE EQUIPMENT.

C EQUIPMENT TO REMAIN.

D REMOVE EQUIPMENT.

SYM.	ZONE	DESCRIPTION	DATE	APPROVED
		REVISIONS		

ENGINEER OF RECORD: LARRY JONES — PE LICENSE NO. 19837

Fred Wilson & Associates, Inc.
Consulting Engineers
C.A. NO. 7188 • 904-398-8636
3970 Hendricks Avenue • Jacksonville, FL 32207

SIGNATURES		DATE
DESIGNED	M. YUDIN	5/09
DRAWN	C. GATES	5/09
CHECKED	L. JONES	5/09
SUBMITTED		9/24/09
APPROVED		9/24/09
APPROVED		
APPROVED		
APPROVED		
APPROVED		
APPROVED		

NATIONAL AERONAUTICS AND SPACE ADMINISTRATION
JOHN F. KENNEDY SPACE CENTER, NASA
KENNEDY SPACE CENTER, FLORIDA

MODIFY C-5 SUBSTATION FOR RING BUS CONFIGURATION

EXISTING CONTROL SWITCHBOARD 1F-4F FRONT ELEVATION

FILE NO. | SIZE F | DWG. NO. 79K38551

PROJ. NO. PCN 98778 | SHEET 31

A/E FILE No. 0601\0601-25\0601-25.5
FILE: E29.DWG
THIS DRAWING PREPARED BY AutoCAD 2008

E29

NOTICE – WHEN GOVERNMENT DRAWINGS, SPECIFICATIONS, OR OTHER DATA ARE USED FOR ANY PURPOSE OTHER THAN IN CONNECTION WITH A DEFINITELY RELATED GOVERNMENT PROCUREMENT OPERATION, THE UNITED STATES GOVERNMENT THEREBY INCURS NO RESPONSIBILITY NOR ANY OBLIGATION WHATSOEVER; AND THE FACT THAT THE GOVERNMENT MAY HAVE FORMULATED, FURNISHED, OR IN ANY WAY SUPPLIED THE SAID DRAWINGS, SPECIFICATIONS, OR OTHER DATA IS NOT TO BE REGARDED BY IMPLICATION OR OTHERWISE IN ANY MANNER LICENSING THE HOLDER OR ANY OTHER PERSON OR CORPORATION, OR CONVEYING ANY RIGHTS OR PERMISSION TO MANUFACTURE, USE, OR SELL ANY PATENTED INVENTION THAT MAY IN ANY WAY BE RELATED THERETO.

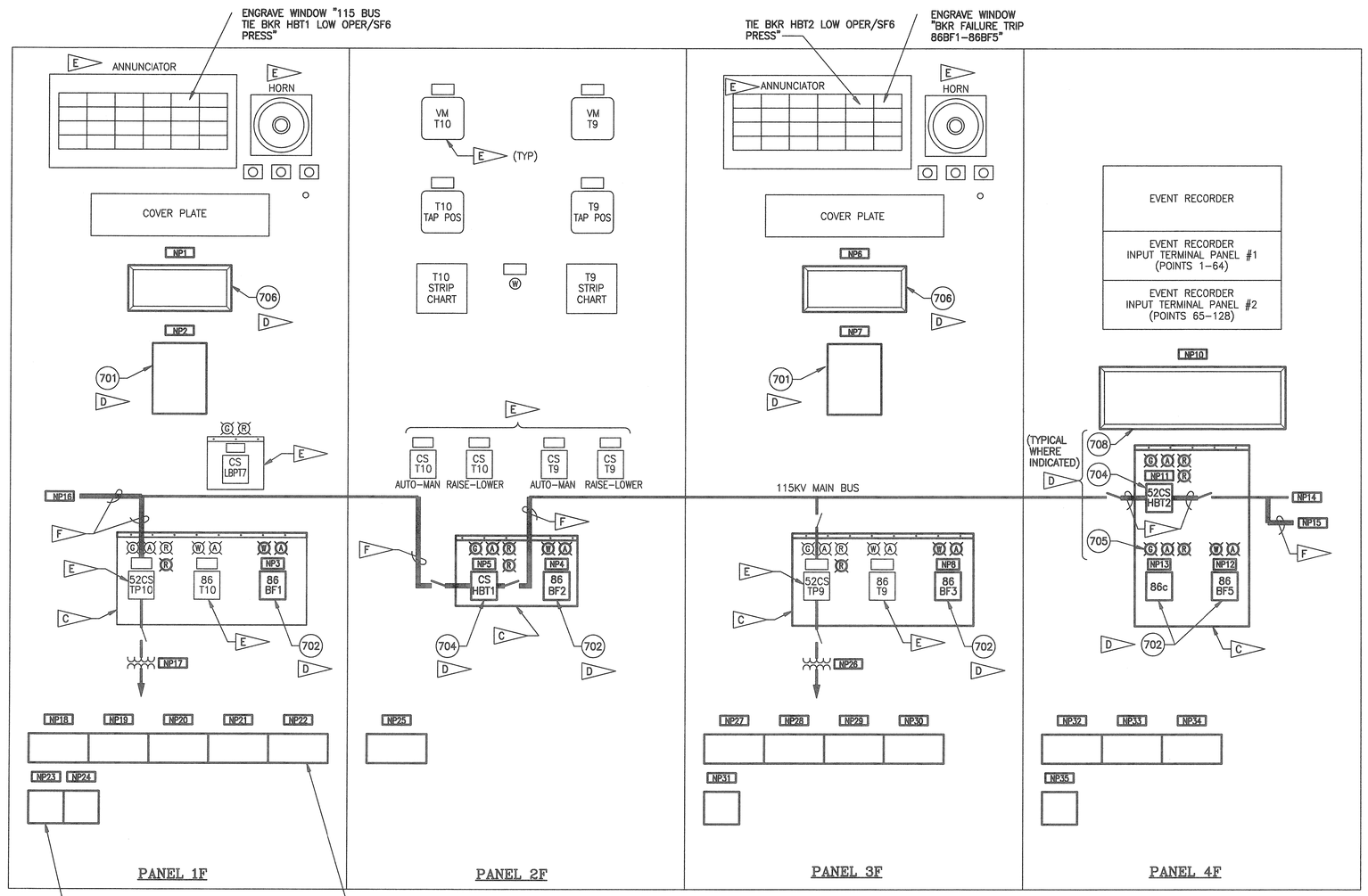

MODIFIED 115KV CONTROL SWITCHBOARD
FRONT ELEVATION
NOT TO SCALE
(PANELS LOCATED IN C–5A CONTROL BUILDING)

NAMEPLATE SCHEDULE (B)

NAMEPLATE NUMBER	DESCRIPTION 1st LINE	2nd LINE	3rd LINE
NP 1	50BF1	115KV BREAKER FAILURE	BREAKERS TP10 & HBT1
NP 2	87T10	TRANSFORMER T10	DIFF
NP 3	86BF1	115kV BKR FAIL LOCKOUT	BREAKER TP10
NP 4	86BF2	115kV BKR FAIL LOCKOUT	BREAKER HBT1
NP 5	115KV TIE BKR HBT1	CONTROL SWITCH	–
NP 6	50BF2	115KV BREAKER FAILURE	BREAKER TP9
NP 7	87T9	TRANSFORMER T9	DIFF
NP 8	86BF3	115KV BKR FAIL LOCKOUT	BREAKER TP9
NP 9	–	–	–
NP 10	87c	ZONE "C"	BUS DIFF
NP 11	115KV TIE BKR HBT2	CONTROL SWITCH	–
NP 12	86BF5	115KV BKR FAIL LOCKOUT	BREAKER HBT2
NP 13	86c	ZONE "C"	BUS DIFF LOCKOUT
NP 14	FROM 115KV	FPL NORTH FEED	–
NP 15	115KV	TO BKR TP8	–
NP 16	FROM 115KV	FPL SOUTH FEED	–
NP 17	TRANSF T10	TO 13.8KV MAIN	BREAKER TP10
NP 18	86T10 DC OUTPUTS	SEE DETAIL (N)	–
NP 19	86BF1 DC OUTPUTS		–
NP 20	87T10/TS1		–
NP 21	87T10/TS2		–
NP 22	87T10/TS3		–
NP 23	50BF1/TS1		–
NP 24	50BF1/TS2		–
NP 25	86BF2 DC OUTPUTS		–
NP 26	TRANSF T9	TO 13.KV MAIN	BREAKER TS9
NP 27	86BF3 DC OUTPUTS	SEE DETAIL (N)	–
NP 28	87T9/TS1		–
NP 29	87T9/TS2		–
NP 30	87T9/TS3		–
NP 31	50BF2/TS1		–
NP 32	86c DC OUTPUTS		–
NP 33	86T9 DC OUTPUTS		–
NP 34	86BF5 DC OUTPUTS		–
NP 35	87c/TS1		–

SPECIFIC NOTES:

A. FOR LEGEND AND GENERAL NOTES, SEE DRAWING E1.

(B) PROVIDE NAMEPLATES FOR NEW EQUIPMENT. NAMEPLATES SHALL BE 1"x3"x1/8" WITH BEVELLED EDGE, ENGRAVED WITH 1/4" BLOCK LETTERING AND FABRICATED FROM WHITE PLASTIC LAMINATE OVER A BLACK CORE. FASTEN TO PANEL WITH #6–32 STAINLESS STEEL SCREWS. NAMEPLATES 18, 19, 25, 27, 32, 33 AND 34 SHALL BE 1"x6".

(C) REMOVE EXISTING AND REPLACE PROTECTIVE COVERS AS INDICATED. PROVIDE HINGED CLEAR PLASTIC, SIZED AS REQUIRED TO COVER CONTROL SWITCHES AND INDICATING LIGHTS.

(D) PROVIDE EQUIPMENT.

(E) EXISTING EQUIPMENT.

(F) PROVIDE MIMIC BUS FABRICATED FROM 3/8" BLUE PLASTIC LAMINATE. FASTEN TO PANEL WITH #6–32 STAINLESS STEEL SCREWS.

G. (701) REFERS TO LIST OF EQUIPMENT. SEE DRAWING E31.

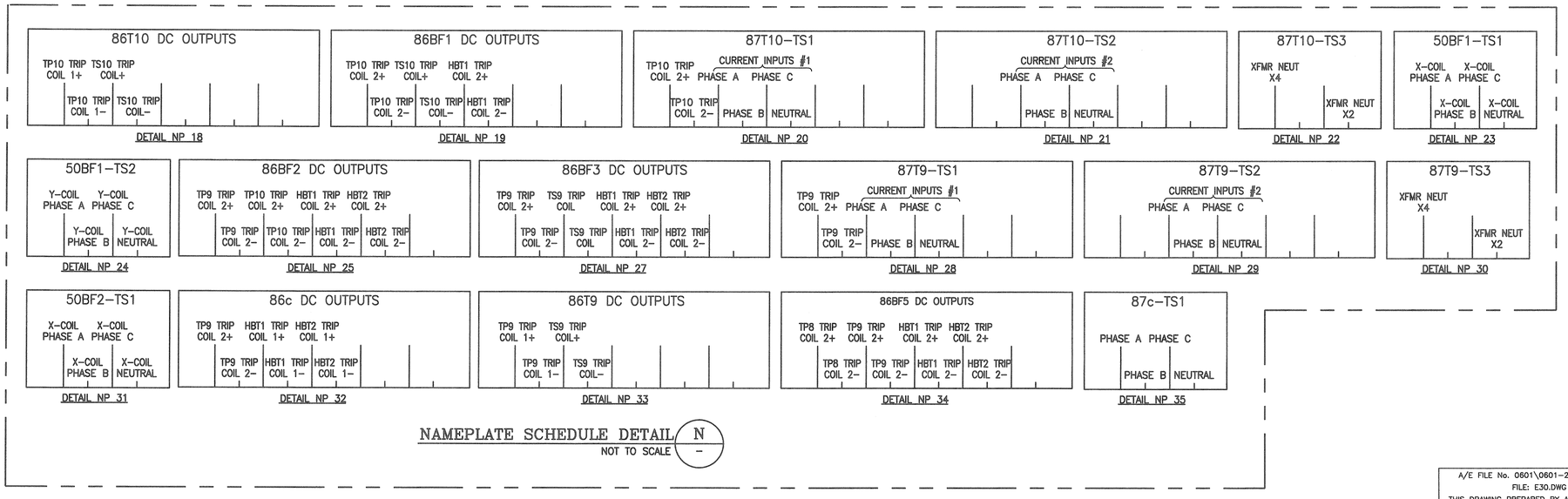

NAMEPLATE SCHEDULE DETAIL (N)
NOT TO SCALE

SYM.	ZONE	DESCRIPTION	DATE	APPROVED
		REVISIONS		

ENGINEER OF RECORD: LARRY JONES — PE LICENSE NO. 19837
Fred Wilson & Associates, Inc. Consulting Engineers
C.A. NO. 7188 • 904-398-8636
3970 Hendricks Avenue • Jacksonville, FL 32207

SIGNATURES		DATE
DESIGNED	M. YUDIN	6/09
DRAWN	C. GATES	6/09
CHECKED	L. JONES	6/09
SUBMITTED		7/24/09
APPROVED		7/24/09
APPROVED		
APPROVED		
APPROVED		
APPROVED		
APPROVED		

NATIONAL AERONAUTICS AND SPACE ADMINISTRATION
JOHN F. KENNEDY SPACE CENTER, NASA
KENNEDY SPACE CENTER, FLORIDA

MODIFY C–5 SUBSTATION FOR RING BUS CONFIGURATION

MODIFIED CONTROL SWITCHBOARD 1F–4F FRONT ELEVATION

FILE NO. | SIZE F | DWG. NO. 79K38551
PROJ. NO. PCN 98778 | SHEET 32

A/E FILE No. 0601\0601–25\0601–25.5
FILE: E30.DWG
THIS DRAWING PREPARED BY AutoCAD 2008

E30

NOTICE – WHEN GOVERNMENT DRAWINGS, SPECIFICATIONS, OR OTHER DATA ARE USED FOR ANY PURPOSE OTHER THAN IN CONNECTION WITH A DEFINITELY RELATED GOVERNMENT PROCUREMENT OPERATION, THE UNITED STATES GOVERNMENT THEREBY INCURS NO RESPONSIBILITY NOR ANY OBLIGATION WHATSOEVER; AND THE FACT THAT THE GOVERNMENT MAY HAVE FORMULATED, FURNISHED, OR IN ANY WAY SUPPLIED THE SAID DRAWINGS, SPECIFICATIONS OR OTHER DATA IS NOT TO BE REGARDED BY IMPLICATION OR OTHERWISE AS IN ANY MANNER LICENSING THE HOLDER OR ANY OTHER PERSON OR CORPORATION, OR CONVEYING ANY RIGHTS OR PERMISSION TO MANUFACTURE, USE OR SELL ANY PATENTED INVENTION THAT MAY IN ANY WAY BE RELATED THERETO.

ITEM #	DESCRIPTION	REMARKS
	– MAJOR EQUIPMENT –	
101	–	–
102	115KV, (121KV) SF6 CIRCUIT BREAKER, 1200A, 40KA INTERRUPTING CAPACITY, COMPLETE WITH LINE & LOAD SIDE BUSHING CT'S	–
		–
	– TUBE AND CABLE –	
301	–	–
302	–	–
303	–	–
304	#4/0 AWG STR. COPPER CONDUCTOR	HARD DRAWN
305	–	–
306	1½" I.P.S. CORONA BELL	–
307	–	–
308	–	–
309	–	–
310	–	–
311	–	–
312	–	–
313	–	–
314	–	–
	– SWITCHES –	
401	–	–
402	–	–
403	115KV, G.O. DOUBLE END BREAK DISCONNECT SWITCH, 3P, 1200A, VERTICAL MOUNTED, COMPLETE WITH CONTROLLER, MOUNTING BASE, INSULATORS (TR22), CONNECTORS, OPERATING PIPE, COUPLINGS AND ASSOCIATED HARDWARE. (BT1 & BT2)	MOUNTED ON 138KV INSULATORS

ITEM #	DESCRIPTION	REMARKS
	– BUS CONNECTORS –	
	CONNECTORS MAIN BRANCH	
501	– – –	–
502	– – –	–
503	– – –	–
504	– – –	–
505	– – –	–
506	– – –	–
507	TEE 1½" I.P.S #4/0 CABLE	–
508	TERMINAL, NEMA 4 HOLE TO #4/0 CABLE	–
509	TERMINAL, NEMA 4 HOLE TO STUD	FURNISH WITH 115KV BREAKER
510	–	–
	– MISCELLANEOUS –	
701	DIFFERENTIAL/OVERCURRENT RELAY. SEL TYPE SEL–787. (87T–TRANSFORMER DIFF)	MODIFICATION TO CONTROL PANELS 1F, 3F
702	LOCKOUT RELAY, ELECTRICALLY OPERATED, HAND RESET, OVAL HANDLE. ELECTROSWITCH SERIES 24 LOR OR APPROVED EQUAL. (86c, 86T & 86BF)	MODIFICATION TO CONTROL PANELS 1F, 2F, 3F, 4F
703	–	
704	BREAKER CONTROL SWITCH ELECTROSWITCH SERIES 74907MG OR APPROVED EQUAL (52CS/HBT1 & 52CS/HBT2)	MODIFICATION TO CONTROL PANELS 2F, 4F
705	125VDC RESISTOR TYPE INCANDESCENT INDICATING LIGHT, PUSH TO TEST. A–B TYPE 800T–Q11 OR APPROVED EQUAL (COLOR AS INDICATED ON FRONT ELEVATION G=GREEN, A=AMBER, R=RED, W=WHITE)	MODIFICATION TO CONTROL PANELS 1F, 2F, 3F, 4F
706	UNIVERSAL OVERCURRENT RELAY SEL TYPE SEL–501. (50BF–BKR FAILURE)	MODIFICATION TO CONTROL PANELS 1F, 3F
707	–	
708	HIGH IMPEDENCE DIFFERENTIAL RELAY. SEL TYPE SEL–587Z. (87c–BUS DIFF)	MODIFICATION TO CONTROL PANEL 4F
709	COMMUNICATION PROCESSOR SEL TYPE SEL–2032	MODIFICATION TO 15KV SWGR CUBICLE 9A (SCHEDULED TO BE INSTALLED UNDER "REPLACE PROTECTIVE RELAYS AT C5, C5A AND ORSINO SUBSTATIONS WITH SEL RELAYS", DRAWING 79K38612, SH 26)
710	ETHERNET GATEWAY SQUARE D TYPE EGX–100	
711	30W, 125VDC/24VDC, POWER SUPPLY, SLIM LINE, D/N RAIL MOUNTED, IDEC PART #PS5R–SD24 OR APPOVED EQUAL.	
712	–	–
713	–	–
714	–	–

SPECIFIC NOTES

A. FOR LEGEND & GENERAL NOTES, SEE DRAWING E1.

SYM.	ZONE	DESCRIPTION	DATE	APPROVED

REVISIONS

ENGINEER OF RECORD: LARRY JONES PE LICENSE NO. 19837

Fred Wilson & Associates, Inc.
Consulting Engineers
C.A. NO. 7188 • 904-398-8636
3970 Hendricks Avenue • Jacksonville, FL 32207

SIGNATURES		DATE
DESIGNED	M. YUDIN	6/09
DRAWN	R. LENOVER	6/09
CHECKED	L. JONES	6/09
SUBMITTED		9/24/09
APPROVED		9/24/09
APPROVED		
APPROVED		
APPROVED		
APPROVED		
APPROVED		

NATIONAL AERONAUTICS AND SPACE ADMINISTRATION
JOHN F. KENNEDY SPACE CENTER, NASA
KENNEDY SPACE CENTER, FLORIDA

MODIFY C–5 SUBSTATION FOR RING BUS CONFIGURATION

LIST OF EQUIPMENT

FILE NO. | SIZE F | DWG. NO. 79K38551

PROJ. NO. PCN 98778 | SHEET 33

A/E FILE No. 0601\0601–25\0601–25.5
FILE: E31.DWG
THIS DRAWING PREPARED BY AutoCAD 2008

E31

KSC FORM 1–11A (REV 6/91) (C/G 12/93) 09/23/2009 F:\ELECT\0601\0601–25\0601–25.5\E31

NOTICE – WHEN GOVERNMENT DRAWINGS, SPECIFICATIONS, OR OTHER DATA ARE USED FOR ANY PURPOSE OTHER THAN IN CONNECTION WITH A DEFINITELY RELATED GOVERNMENT PROCUREMENT OPERATION, THE UNITED STATES GOVERNMENT THEREBY INCURS NO RESPONSIBILITY NOR ANY OBLIGATION WHATSOEVER; AND THE FACT THAT THE GOVERNMENT MAY HAVE FORMULATED, FURNISHED, OR IN ANY WAY SUPPLIED THE SAID DRAWINGS, SPECIFICATIONS, OR OTHER DATA IS NOT TO BE REGARDED BY IMPLICATION OR OTHERWISE AS IN ANY MANNER LICENSING THE HOLDER OR ANY OTHER PERSON OR CORPORATION, OR CONVEYING ANY RIGHTS OR PERMISSION TO MANUFACTURE, USE, OR SELL ANY PATENTED INVENTION THAT MAY IN ANY WAY BE RELATED THERETO.

MODIFIED D.C. PANEL DC

VOLT : 125V DC
– PHASE 2 WIRE
225 AMPS ☐ MAIN BKR ☒ M.L.O
☒ SURFACE ☐ FLUSH
B C

FEEDER SIZE : –
AIC RATING :–
LOCATION :C5A CONTROL BUILDING
FED FROM :BATTERY RACK

NO.	POLE	TRIP	WIRE	GND	CND	PNL/CKT	SERVES	NO.	POLE	TRIP	WIRE	GND	CND	PNL/CKT	SERVES
1	2	20	–	–	–	–	115KV SF6 BKR TP9 TRIP CKT 1	2	2	20	–	–	–	–	115KV SF6 BKR TP10 TRIP CKT 1
3	2	20	–	–	–	–	TRANSFORMER T9 DIFFERENTIAL	4	2	20	–	–	–	–	TRANSFORMER T10 DIFFERENTIAL
5	2	20	–	–	–	–	**115KV CONTROL BOARD ANNUNCIATOR – BUS 4**	6	2	20	–	–	–	–	**115KV CONTROL BOARD ANNUNCIATOR – BUS 5**
7	2	*30	–	–	–	–	**115KV BUS TIE BREAKER HBT1**	8	2	20	–	–	–	–	**115KV M.O. SWITCH LBPT7 (BAY H–17)**
9	2	50	–	–	–	–	**13.8KV SWITCHGEAR BUS 4**	10	2	50	–	–	–	–	**13.8KV SWITCHGEAR BUS 5**
11	2	20	–	–	–	–	**13.8KV SWITCHGEAR BUS 4 DIFFERENTIAL**	12	2	30	–	–	–	–	**13.8KV SWITCHGEAR BUS 5 DIFFERENTIAL**
13	2	30	–	–	–	–	**115KV BUS TIE BREAKER HBT2**	14	2	30					**SPARE**
15	2	30	–	–	–	–	115KV SF6 BKR TP9 TRIP CKT 2	16	2	30	–	–	–	–	115KV SF6 BKR TP10 TRIP CKT 2
17	2	30	–	–	–	–	13.8KV BREAKER TEST PANEL	18	2	30	–	–	–	–	AUX RELAY PANEL
19	2	20	–	–	–	–	115KV CONTROL PANEL SECTION 3F	20	2	30	–	–	–	–	115KV CONTROL PANEL SECTION 4F

REVISE NOMENCLATURE OF CIRCUITS 5 THROUGH 14 AS INDICATED.
*REPLACE BREAKER CIRCUIT 7 WITH A 2 POLE, 30 AMP

EXISTING D.C. PANEL E2

VOLT : 125V DC
– PHASE 2 WIRE
225 AMPS ☒ MAIN BKR ☐ M.L.O
☒ SURFACE ☐ FLUSH
B

FEEDER SIZE : –
AIC RATING :10K
LOCATION :C5 CONTROL BUILDING
FED FROM :BATTERY RACK

NO.	POLE	TRIP	WIRE	GND	CND	PNL/CKT	SERVES	NO.	POLE	TRIP	WIRE	GND	CND	PNL/CKT	SERVES
1	2	50	2#8	–	–	–	D.C. BUS CABINETS 2–7	2	2	50	2#8	–	–	–	D.C. BUS CABINETS 15–19
3	2	50	2#8	–	–	–	D.C. BUS CABINETS 8–14	4	2	40	2#8	–	–	–	DIFFERENTIAL BUS CABINET 15A
5	2	30	2#8	–	–	–	FAULT RECORDER	6	2	30	2#8	–	–	–	SPARE
7	2	30	2#8	–	–	–	EMERGENCY LIGHTS	8	2	30	–	–	–	–	LBPT4 115KV GOAB SWITCH (BAY H–11)
9	1	–	–	–	–	–	SPACE	10	1	–	–	–	–	–	SPACE
11	1	–	–	–	–	–	SPACE	12	1	–	–	–	–	–	SPACE
13	1	–	–	–	–	–	SPACE	14	1	–	–	–	–	–	SPACE
15	1	–	–	–	–	–	SPACE	16	1	–	–	–	–	–	SPACE
17	1	–	–	–	–	–	SPACE	18	1	–	–	–	–	–	SPACE
19	1	–	–	–	–	–	SPACE	20	1	–	–	–	–	–	SPACE
21	1	–	–	–	–	–	SPACE	22	1	–	–	–	–	–	SPACE

MODIFIED D.C. PANEL E2

VOLT : 125V DC
– PHASE 2 WIRE
225 AMPS ☒ MAIN BKR ☐ M.L.O
☒ SURFACE ☐ FLUSH
B C

FEEDER SIZE : –
AIC RATING :10K
LOCATION :C5 CONTROL BUILDING
FED FROM :BATTERY RACK

NO.	POLE	TRIP	WIRE	GND	CND	PNL/CKT	SERVES	NO.	POLE	TRIP	WIRE	GND	CND	PNL/CKT	SERVES
1	2	50	2#8	–	–	–	D.C. BUS CABINETS 2–7	2	2	50	2#8	–	–	–	D.C. BUS CABINETS 15–19
3	2	50	2#8	–	–	–	D.C. BUS CABINETS 8–14	4	2	40	2#8	–	–	–	DIFFERENTIAL BUS CABINET 15A
5	2	30	2#8	–	–	–	FAULT RECORDER	6	2	30	2#8	–	–	–	SPARE
7	2	30	2#8	–	–	–	EMERGENCY LIGHTS	8	2	30	2#8	–	–	–	**LBPT4 115KV GOAB SWITCH (BAY H–5)**
9	1	–	–	–	–	–	SPACE	10	1	–	–	–	–	–	SPACE
11	1	–	–	–	–	–	SPACE	12	1	–	–	–	–	–	SPACE
13	1	–	–	–	–	–	SPACE	14	1	–	–	–	–	–	SPACE
15	1	–	–	–	–	–	SPACE	16	1	–	–	–	–	–	SPACE
17	1	–	–	–	–	–	SPACE	18	1	–	–	–	–	–	SPACE
19	1	–	–	–	–	–	SPACE	20	1	–	–	–	–	–	SPACE
21	1	–	–	–	–	–	SPACE	22	1	–	–	–	–	–	SPACE

REVISE NOMENCLATURE OF CIRCUIT 8 AS INDICATED.

EXISTING PANEL LP1

VOLT : 208/120V
3 PHASE 4 WIRE
225 AMPS ☐ MAIN BKR ☒ M.L.O
☒ SURFACE ☐ FLUSH
B

FEEDER SIZE :–
AIC RATING :10KA
LOCATION :C5A CONTROL BUILDING
FED FROM :PANEL PP1

NO.	POLE	TRIP	WIRE	GND	CND	PNL/CKT	SERVES	NO.	POLE	TRIP	WIRE	GND	CND	PNL/CKT	SERVES
1	1	20	–	–	–	–	RECEPT WEST WALL	2	1	20	–	–	–	–	RECEPT EAST WALL
3	1	20	–	–	–	–	BATTERY ROOM LIGHTS	4	1	20	–	–	–	–	YARD LIGHTS VIA CONTACTOR
5	1	20	–	–	–	–	BLDG LIGHTS CENTER & WEST	6	1	20	–	–	–	–	BLDG EXT LIGHTS VIA CONTACTOR
7	1	20	–	–	–	–	TIE BKR HTRS 10A & 10B	8	1	20	–	–	–	–	SPARE
9	1	20	–	–	–	–	SPACE W/HW	10	1	40	–	–	–	–	SWGR B HEATERS 14B THRU 18B
11	1	20	–	–	–	–	SPARE	12	1	20	–	–	–	–	SPARE
13	1	40	–	–	–	–	SWGR B HEATERS 1B–5B	14	1	20	–	–	–	–	SPARE
15	1	20	–	–	–	–	SPARE	16	1	20	–	–	–	–	SPARE
17	1	40	–	–	–	–	SWGR B HEATERS 6B THRU 9B	18	1	40	–	–	–	–	SWGR B HEATERS 10B THRU 13B
19	1	20	–	–	–	–	BATTERY CHARGER	20	1	20	–	–	–	–	EXH FAN BATTERY ROOM
21	1	20	–	–	–	–	CKT BKR TEST CABINET	22	2	30	–	–	–	–	SPARE
23	2	30	–	–			SPARE	24	2	30	–	–	–	–	SPARE
25	2	30	–	–			SPARE	26	1	20	–	–	–	–	SPARE
27	2	30	–	–	–	–	115KV BREAKER TP9	28	2	30	–	–	–	–	115KV BREAKER TP10
31	1	20	–	–	–	–	115kV LBPT #5	32	1	20	–	–	–	–	115KV LBPT #7
33	1	20	–	–	–	–	LIGHTS 115KV CONTROL PANELS	34	1	20	–	–	–	–	EXIT & EMERGENCY LIGHTS
35	1	20	–	–	–	–	115kV PT #6	36	1	20	–	–	–	–	SPARE
37	1	20	–	–	–	–	SUMP PUMP #2	38	1	20	–	–	–	–	HVAC CONTROLS
39	1	20	–	–	–	–	SUMP PUMP #1	40	1	20	–	–	–	–	SPARE
41	1	20	–	–	–	–	VAULT LIGHTS	42	1	20	–	–	–	–	SPARE

MODIFIED PANEL LP1

VOLT : 208/120V
3 PHASE 4 WIRE
225 AMPS ☐ MAIN BKR ☒ M.L.O
☒ SURFACE ☐ FLUSH
B C

FEEDER SIZE :–
AIC RATING :10KA
LOCATION :C5A CONTROL BUILDING
FED FROM :PANEL PP1

NO.	POLE	TRIP	WIRE	GND	CND	PNL/CKT	SERVES	NO.	POLE	TRIP	WIRE	GND	CND	PNL/CKT	SERVES
1	1	20	–	–	–	–	RECEPT WEST WALL	2	1	20	–	–	–	–	RECEPT EAST WALL
3	1	20	–	–	–	–	BATTERY ROOM LIGHTS	4	1	20	–	–	–	–	YARD LIGHTS VIA CONTACTOR
5	1	20	–	–	–	–	BLDG LIGHTS CENTER & WEST	6	1	20	–	–	–	–	BLDG EXT LIGHTS VIA CONTACTOR
7	1	20	–	–	–	–	TIE BKR HTRS 10A & 10B	8	1	20	–	–	–	–	SPARE
9	1	20	–	–	–	–	SPACE W/HW	10	1	40	–	–	–	–	SWGR B HEATERS 14B THRU 18B
11	1	20	–	–	–	–	SPARE	12	1	20	–	–	–	–	SPARE
13	1	40	–	–	–	–	SWGR B HEATERS 1B–5B	14	1	20	–	–	–	–	SPARE
15	1	20	–	–	–	–	SPARE	16	1	20	–	–	–	–	SPARE
17	1	40	–	–	–	–	SWGR B HEATERS 6B THRU 9B	18	1	40	–	–	–	–	SWGR B HEATERS 10B THRU 13B
19	1	20	–	–	–	–	BATTERY CHARGER	20	1	20	–	–	–	–	EXH FAN BATTERY ROOM
21	1	20	–	–	–	–	CKT BKR TEST CABINET	22	2	30	4/C #10	–	–	–	**115kV BUS TIE BREAKER HBT1**
23	2	30	4/C #10	–	–	–	**115KV BUS TIE BREAKER HBT2**	26	1	20	–	–	–	–	SPARE
27	2	30	–	–	–	–	115KV BREAKER TP9	28	2	30	–	–	–	–	115KV BREAKER TP10
31	1	20	–	–	–	–	**SPARE**	32	1	20	–	–	–	–	115KV LBPT #7
33	1	20	–	–	–	–	LIGHTS 115KV CONTROL PANELS	34	1	20	–	–	–	–	EXIT & EMERGENCY LIGHTS
35	1	20	–	–	–	–	**SPARE**	36	1	20	–	–	–	–	SPARE
37	1	20	–	–	–	–	SUMP PUMP #2	38	1	20	–	–	–	–	HVAC CONTROLS
39	1	20	–	–	–	–	SUMP PUMP #1	40	1	20	–	–	–	–	SPARE
41	1	20	–	–	–	–	VAULT LIGHTS	42	1	20	–	–	–	–	SPARE

REVISE NOMENCLATURE OF CIRCUITS 22, 23, 31 & 35 AS INDICATED.

SPECIFC NOTES:

A. FOR LEGEND AND GENERAL NOTES, SEE DRAWING E1.

B THE LOADS AND CONDUCTOR SIZES INDICATED ON THE PANEL SCHEDULES HAVE NOT BEEN VERIFIED. LOAD INFORMATION SHOWN WAS TAKEN FROM PANEL DIRECTORIES.

C MODIFIED CIRCUITS ARE SHOWN IN BOLD TYPE.

SYM.	ZONE	DESCRIPTION	DATE	APPROVED

REVISIONS

ENGINEER OF RECORD: LARRY JONES PE LICENSE NO. 19837
Fred Wilson & Associates, Inc.
Consulting Engineers
C.A. NO. 7188 • 904-398-8636
3970 Hendricks Avenue • Jacksonville, FL 32207

SIGNATURES		DATE
DESIGNED	M. YUDIN	6/09
DRAWN	B. GEMMELL	6/09
CHECKED	L. JONES	6/09
SUBMITTED		7/24/09
APPROVED		7/24/09
APPROVED		
APPROVED		
APPROVED		
APPROVED		
APPROVED		

NATIONAL AERONAUTICS AND SPACE ADMINISTRATION
JOHN F. KENNEDY SPACE CENTER, NASA
KENNEDY SPACE CENTER, FLORIDA

MODIFY C–5 SUBSTATION FOR RING BUS CONFIGURATION

EXISTING AND MODIFIED A.C AND D.C. PANEL SCHEDULES

FILE NO. | SIZE F | DWG. NO. 79K38551
PROJ. NO. PCN 98778 | SHEET 34

A/E FILE No. 0601\0601–25\0601–25.5
FILE: E32.DWG
THIS DRAWING PREPARED BY AutoCAD 2008

E32

NOTICE – WHEN GOVERNMENT DRAWINGS, SPECIFICATIONS, OR OTHER DATA ARE USED FOR ANY PURPOSE OTHER THAN IN CONNECTION WITH A DEFINITELY RELATED GOVERNMENT PROCUREMENT OPERATION, THE UNITED STATES GOVERNMENT THEREBY INCURS NO RESPONSIBILITY NOR ANY OBLIGATION WHATSOEVER; AND THE FACT THAT THE GOVERNMENT MAY HAVE FORMULATED, FURNISHED, OR IN ANY WAY SUPPLIED THE SAID DRAWINGS, SPECIFICATIONS, OR OTHER DATA IS NOT TO BE REGARDED BY IMPLICATION OR OTHERWISE IN ANY MANNER LICENSING THE HOLDER OR ANY OTHER PERSON OR CORPORATION, OR CONVEYING ANY RIGHTS OR PERMISSION TO MANUFACTURE, USE, OR SELL ANY PATENTED INVENTION THAT MAY IN ANY WAY BE RELATED THERETO.

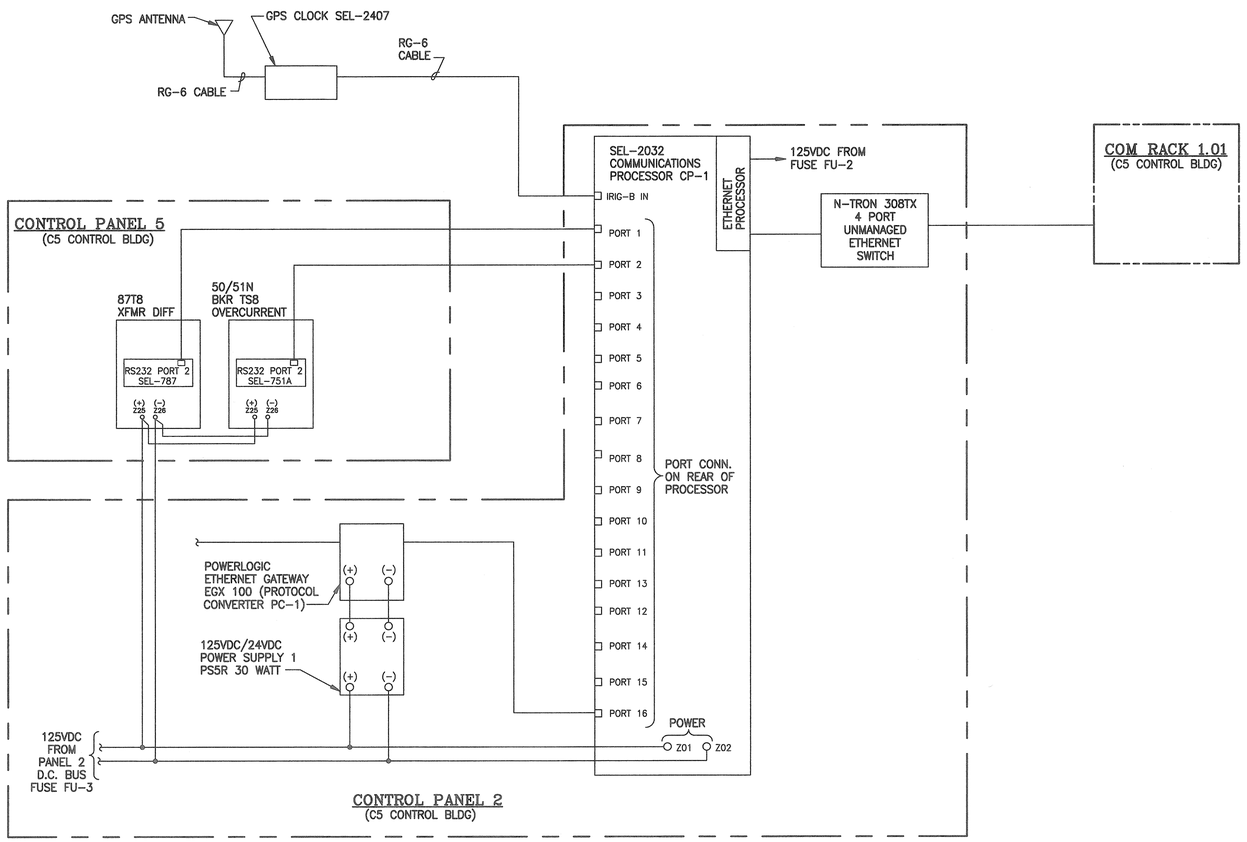

SPECIFIC NOTES

A. FOR LEGEND AND GENERAL NOTES, SEE DRAWING E1.

B. FOR THE MODIFIED C5/C5A COMMUNICATIONS SYSTEM DIAGRAM, SEE DRAWING 79K38612, SHEET 27. (WORK SHOWN ON THAT DRAWING WILL BE PERFORMED UNDER "REPLACE PROTECTIVE RELAYS AT C5, C5A AND ORSINO SUBSTATIONS WITH SEL RELAYS").

SYM.	ZONE	DESCRIPTION	DATE	APPROVED

REVISIONS

ENGINEER OF RECORD: LARRY JONES — PE LICENSE NO. 19837

Fred Wilson & Associates, Inc.
Consulting Engineers
C.A. NO. 7188 • 904-398-8636
3970 Hendricks Avenue • Jacksonville, FL 32207

SIGNATURES		DATE
DESIGNED	M. YUDIN	6/09
DRAWN	B. GEMMELL	6/09
CHECKED	L. JONES	6/09
SUBMITTED		9/24/09
APPROVED		9/24/09
APPROVED		
APPROVED		
APPROVED		
APPROVED		
APPROVED		

NATIONAL AERONAUTICS AND SPACE ADMINISTRATION
JOHN F. KENNEDY SPACE CENTER, NASA
KENNEDY SPACE CENTER, FLORIDA

MODIFY C-5 SUBSTATION FOR RING BUS CONFIGURATION

EXISTING COMMUNICATION SYSTEM BLOCK DIAGRAM

FILE NO.	SIZE	DWG. NO.
	F	79K38551

PROJ. NO. PCN 98778 — SHEET 35

A/E FILE No. 0601\0601-25\0601-25.5
FILE: E33.DWG
THIS DRAWING PREPARED BY AutoCAD 2008

E33

NOTICE — WHEN GOVERNMENT DRAWINGS, SPECIFICATIONS, OR OTHER DATA ARE USED FOR ANY PURPOSE OTHER THAN IN CONNECTION WITH A DEFINITELY RELATED GOVERNMENT PROCUREMENT OPERATION, THE UNITED STATES GOVERNMENT THEREBY INCURS NO RESPONSIBILITY NOR ANY OBLIGATION WHATSOEVER; AND THE FACT THAT THE GOVERNMENT MAY HAVE FORMULATED, FURNISHED, OR IN ANY WAY SUPPLIED THE SAID DRAWINGS, SPECIFICATIONS OR OTHER DATA IS NOT TO BE REGARDED BY IMPLICATION OR OTHERWISE IN ANY MANNER LICENSING THE HOLDER OR ANY OTHER PERSON OR CORPORATION, OR CONVEYING ANY RIGHTS OR PERMISSION TO MANUFACTURE, USE, OR SELL ANY PATENTED INVENTION THAT MAY IN ANY WAY BE RELATED THERETO.

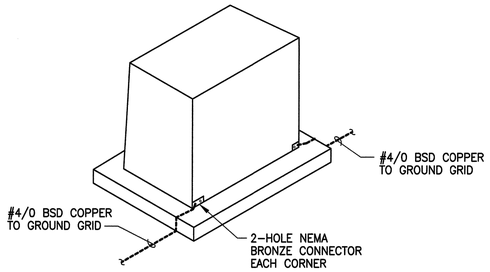

CIRCUIT BREAKER GROUNDING – DETAIL (G / E27)
NOT TO SCALE

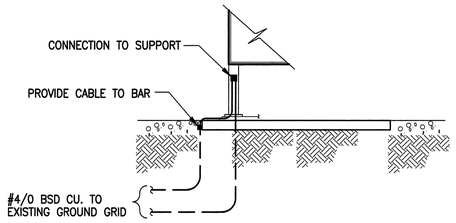

ELEVATION (H / E27)
NOT TO SCALE

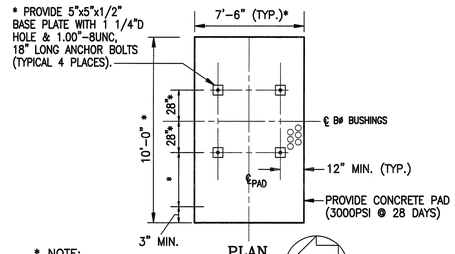

PLAN

* NOTE:
COORDINATE SIZE AND LOCATION OF ANCHOR BOLTS, PAD & CONTROL CABLE CONDUIT PLACEMENT WITH EQUIPMENT FURNISHED

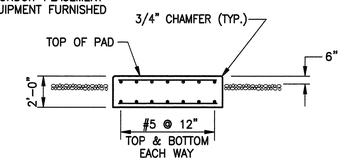

SECTION

NOTE: PROVIDE ANCHOR BOLTS OF THE SIZE & SPACING TO SUIT EQUIPMENT FURNISHED.

FOUNDATION DETAIL (J / E27)
NOT TO SCALE
BREAKERS HBT1 & HBT2

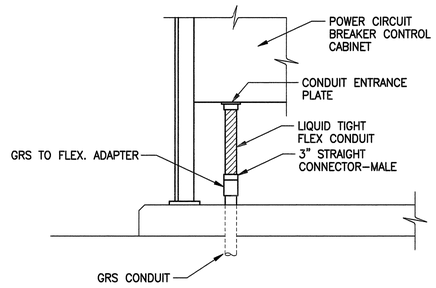

CONDUIT CONNECTION TO POWER CIRCUIT BREAKER – DETAIL (K / E26 E27)
NOT TO SCALE
PROVIDE ALL EQUIPMENT AND AND CONNECTORS AS SHOWN

SPECIFIC NOTES

A. FOR LEGEND AND GENERAL NOTES, SEE DRAWING E1.

B. PROVIDE CABLES BF-C1, BF-C2, BF-C3 & BF-C4 IN (2) 2" GRS CONDUITS TO PANEL 5 IN C5 CONTROL BUILDING. CABLES SHALL BE ROUTED FROM PANEL 5 TO FPL DIFF "a" AND "b" INTERFACE CABINETS VIA CONDUIT/DUCT BF1 AND BF2 (BREAKER FAILURE, TRIPS & LOCKOUTS).

C. PROVIDE 8#12 IN 3/4" GRS CONDUIT FOR HBT1 AND HBT2 STATUS INPUTS TO CP4 IN CUBICLE 9A.

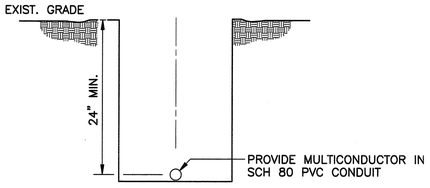

DIRECT BURIED CONDUIT TRENCH DETAIL (R / E26)
NOT TO SCALE

NOTE:
TRENCH WIDTH AS REQUIRED TO INSTALL SINGLE LAYER OF CONDUITS WITH 2" SPACING BETWEEN CONDUITS.

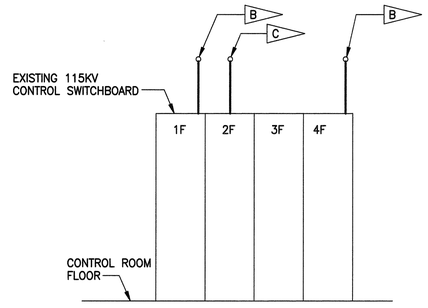

ELEVATION (L / E26)
NOT TO SCALE

SYM.	ZONE	DESCRIPTION	DATE	APPROVED
		REVISIONS		

ENGINEER OF RECORD: LARRY JONES — PE LICENSE NO. 19837
Fred Wilson & Associates, Inc. Consulting Engineers
C.A. NO. 7188 • 904-398-8636
3970 Hendricks Avenue • Jacksonville, FL 32207

SIGNATURES		DATE
DESIGNED	M. YUDIN	6/09
DRAWN	B. GEMMELL	6/09
CHECKED	L. JONES	6/09
SUBMITTED		9/24/09
APPROVED		9/24/09
APPROVED		
APPROVED		
APPROVED		
APPROVED		
APPROVED		

NATIONAL AERONAUTICS AND SPACE ADMINISTRATION
JOHN F. KENNEDY SPACE CENTER, NASA
KENNEDY SPACE CENTER, FLORIDA

MODIFY C-5 SUBSTATION FOR RING BUS CONFIGURATION

MISCELLANEOUS DETAILS AND SUGGESTED SEQUENCE OF CONSTRUCTION

FILE NO. | SIZE F | DWG. NO. 79K38551
PROJ. NO. PCN 98778 | SHEET 36

A/E FILE No. 0601\0601-25\0601-25.5
FILE: E34.DWG
THIS DRAWING PREPARED BY AutoCAD 2008

E34

NOTICE — WHEN GOVERNMENT DRAWINGS, SPECIFICATIONS, OR OTHER DATA ARE USED FOR ANY PURPOSE OTHER THAN IN CONNECTION WITH A DEFINITELY RELATED GOVERNMENT PROCUREMENT OPERATION, THE UNITED STATES GOVERNMENT THEREBY INCURS NO RESPONSIBILITY NOR ANY OBLIGATION WHATSOEVER; AND THE FACT THAT THE GOVERNMENT MAY HAVE FORMULATED, FURNISHED, OR IN ANY WAY SUPPLIED THE SAID DRAWINGS, SPECIFICATIONS OR OTHER DATA IS NOT TO BE REGARDED BY IMPLICATION OR OTHERWISE IN ANY MANNER CONSTRUED, THE HOLDER OR ANY OTHER PERSON OR CORPORATION, CONVEYING ANY RIGHTS OR PERMISSION TO MANUFACTURE, USE, OR SELL ANY PATENTED INVENTION THAT MAY IN ANY WAY BE RELATED THERETO.

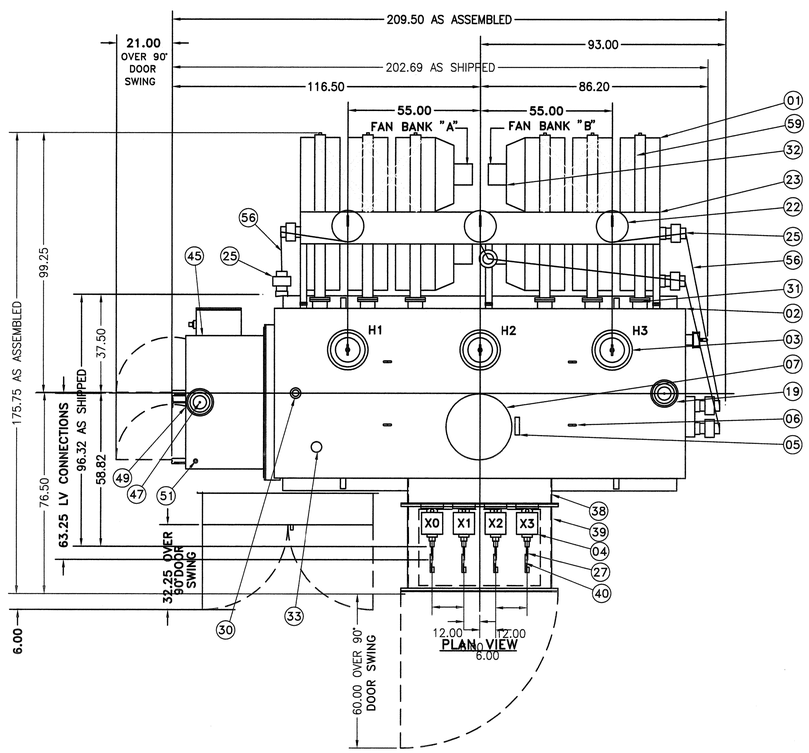

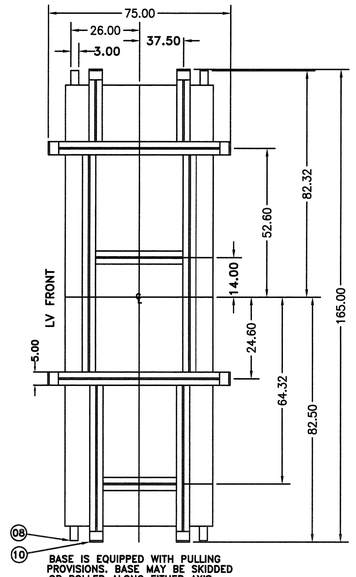

BASE IS EQUIPPED WITH PULLING PROVISIONS. BASE MAY BE SKIDDED OR ROLLED ALONG EITHER AXIS. BASE IS DESIGNED FOR AIR CIRCULATION.

BASE DETAIL

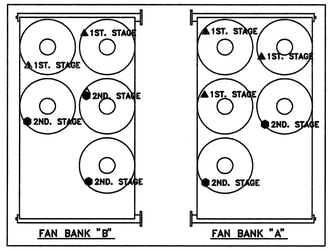

NOTES:

1. RADIATORS EQUIPPED WITH 1.00 IPS FILL AND DRAIN PLUGS.
2. TWO (2) HOLES-.50-13-TAPPED THRU ON 1.75 INCH CENTERS.
3. FLAPPER TYPE SHUT-OFF TYPE VALVES WELDED TO TANK TO PERMIT REMOVAL OF OIL FROM RADIATORS WITHOUT DRAINING OIL FROM TRANSFORMER. VALVES INDICATE "OPEN" AND "CLOSED" POSITIONS.
4. LAPP PRC BUSHING CATALOG NUMBER B-89122-10-70, 15 KV,110 BIL, 2000 AMP BOTTOM CONNECTED, TOP STUD 1.50-12 X 2.125 USABLE SILVER PLATED STUD.
5. LAPP POC-A BUSHING CATALOG NUMBER B-67220-70, 115 KV, 550 BIL, 800 AMP DRAW LEAD CONNECTED, TOP STUD 1.50-12 X 2.00 USABLE SILVER PLATED STUD.
6. OHIO BRASS DYNAVAR STATION CLASS METAL OXIDE SURGE ARRESTER, CATALOG NUMBER VN-219570, 90 KV DUTY CYCLE, 70 MCOV, 10.00 INCH BOLT CIRCLE, TO ACCOMMODATE .50 DIAMETER MOUNTING BOLTS.
7. CONTROL CABINET EQUIPPED WITH A REMOVABLE BOTTOM PLATE, 10.00 X 63.00 OVER 7.00 X 60.00 CUTOUT.
8. 1/6 HP, SINGLE PHASE, 60 HERTZ, 208 VOLTS, 1140 RPM, 5200 CFM, 24.00 DIAMETER HORIZONTAL BLOWING FAN, SIMILAR TO KRENZ AND COMPANY, PART NUMBER F24-A9063.
9. ANDERSON ELECTRIC CATALOG NUMBER TLS-42, TO ACCOMMODATE #6 SOL-250 MCM CABLES.
10. PENN UNION CATALOG NUMBER SLB-1512-E, TIN PLATED FOUR (4) HOLE SPADE CONNECTOR.
11. PAINT COLOR: ANSI 70 LIGHT GRAY, MUNSELL NOTATION 5BG 7.0/0.4 OR EQUIVALENT.

18000 KVA OA, 24000 KVA FA, 30000 KVA FA/FA
THREE PHASE, 60 HERTZ, 65° C RISE
OISC LTC POWER TRANSFORMER

HV-115000 DELTA, (450 KV BIL) WITH TAPS
AT 121700/118350/111650/108300

LV-13800Y/7967, (110 KV BIL) W/16 (.625% TAPS A&BN)

APPROXIMATE WEIGHT IN POUNDS

UNTANKING HEAVIEST PIECE	46000
TANK AND FITTINGS	18835
* RADIATORS	8821
TANK OIL 4346 GALS.	32585
RADIATOR OIL 455 GALS.	3409
LTC OIL 360 GALS.	2700
TOTAL ASSEMBLY WEIGHT	112350

ITEMS MARKED * REMOVE FOR SHIPMENT

SHIPPING UNIT	99950
SHIPPING PARTS	12400
TOTAL SHIPPING WEIGHT	112350

OIL REQUIRED TO COVER CORE AND COIL ASSEMBLY WITH RADIATORS 3934 GALS.
WITHOUT RADIATORS 3535 GALS.

UNIT SHIPPED FILLED WITH OIL TO WITHIN 2.00 INCHES OF COVER WITH 4654 GALS. OF OIL.
LTC SHIPPED FILLED WITH OIL.
MAKE UP OIL SHIPPED IN DRUMS.
℄ = CENTER LINE OF TANK
C/G-A = CENTER OF GRAVITY ASSEMBLED.
C/G-S = CENTER OF GRAVITY SHIPPING.
▲ 1ST. STAGE FAN
● 2ND. STAGE FAN
HV BUSHING REMOVAL 298 INCHES.
UNTANKING HEIGHT 273 INCHES.

	ITM	QTY	DESCRIPTION
*	01	1	COOLING RADIATORS (BOLTED ON) NOTE #1
	02	1	TRANSFORMER COVER (WELDED ON)
*	03	3	H.V. BUSHINGS NOTE #5
	04	4	L.V. BUSHINGS NOTE #4
	05	1	CORE GROUND NAMEPLATE
	06	4	TRANSFORMER COVER LIFTING EYE
	07	1	MANHOLE W/ BOLTED COVER (18.0 DIA. OPENING)
	08	4	TRANSFORMER JACKING FACILITIES
	09	4	TANK GROUND PROVISIONS NOTE #2
	10	1	TRANSFORMER BASE
	11	1	DRAIN AND SAMPLING VALVE W/ END PLUG (2.00) (S.S. W/125 TD)
	12	1	DIAGRAMMATIC NAMEPLATE
	13	1	NO LOAD TAPCHANGER (KECO DWG. NO. 242710-3313)
	14	1	LIQUID LEVEL INDICATOR (QUALITROL CAT. NO. 032-057-01)
	15	1	LIQUID TEMPERATURE INDICATOR (QUALITROL CAT. NO. 104-079-01)
	16	1	FILTER PRESS VALVE (1.00) (T.J. MFG. EAGV-1-T-CH)
	17	1	PRESSURE VACUUM GAUGE (QUALITROL CAT. NO. 50-35E)
	18	1	PRESSURE VACUUM REGULATOR (REGO CAT. NO. 004286-A-580)
	19	1	PRESSURE RELIEF DEVICE (QUALITROL CAT. NO. 208-60E)
	20	4	TRANSFORMER LIFTING FACILITIES
	21	1	CONTROL CABINET NOTE #7
*	22	3	H.V. ARRESTERS NOTE #6
*	23	1	H.V. ARRESTER MOUNTING BRACKETS
*	24	3	DISCHARGE COUNTERS (OHIO BRASS CAT. NO. OB 97882-3001)
*	25	7	STAND-OFF INSULATORS (LAPP CAT. NO. 10470-70)
*	26	3	H.V. CONNECTORS NOTE #10
*	27	4	L.V. CONNECTORS NOTE #10
	28	1	WINDING TEMPERATURE INDICATOR (QUALITROL CAT. NO. 104-131-01)
	29	1	CURRENT TRANSFORMER JUNCTION BOX
	30	1	FILLING PLUG (2.00)
	31	12	RADIATOR SHUT-OFF VALVES (TRANTER CAT. NO. D-S-2288) NOTE #3
	32	10	COOLING FANS NOTE #8
	33	1	FAULT PRESSURE RELAY (QUALITROL CAT. NO. 910-011-01)
	34	1	TEST VALVE (.25) (T.J. MFG. EAGV-14-T-CH)
	35	1	RTD THERMOWELL PROVISIONS (QUALITROL CAT. NO. 167-50-3D)
	36	2	GROUND CONNECTOR NOTE #9
	37	1	INERT GAS CABINET (KECC DWG. NO. 2-630-1464-902)
	38	1	LV THROAT
*	39	1	LV TERMINAL CHAMBER
*	40	4	LV SPADE EXTENSION (KECO DWG. NO. 242710-3312)
	41	4	LV SPADE SUPPORTS (PHENOLIC MATERIAL)
*	42	1	LV TERMINAL CHAMBER COVER (HINGED DOOR)
	43	2	LV TERMINAL CHAMBER COVER HANDLES
*	44	1	LV TERMINAL CHAMBER BOTTOM ENTRANCE (16.00 X 50.00 OPN'G.)
	45	1	LOAD TAP (CHANGER REINHAUSEN RMT-I)
	46	1	LTC DRAIN AND SAMPLING VALVE W/END PLUG (1.00)
	47	1	LTC PRESSURE RELIEF DEVICE (QUALITROL CAT. NO. 208-60E)
	48	1	LTC LIQUID LEVEL INDICATOR (QUALITROL CAT. NO. 032-059-01)
	49	1	LTC PRESSURE RELIEF VALVE (QUALITROL CAT. NO. 351-010-03)
	50	1	LTC HANDCRANK (REINHAUSEN CAT. NO. 1365817G02)
	51	1	LTC FILLING PLUG (1.00)
	52	1	NITROGEN GAS CYLINDER (KECO DWG NO. 2-111-0027-904)
	53	1	NITROGEN CYLINDER CHAIN
	54	1	NITROGEN GAS CYLINDER BASE
	55	1	AUXILIARY CONTROL CABINET
*	56	3	DISCHARGE COUNTER CONNECTIONS (#4/0 BARE COPPER CABLE)
*	57	9	HV ARRESTER INSULATED BASE (OHIO BRASS CAT. NO. OB 272145)
*	58	1	LV NEUTRAL GROUND PROVISIONS
			RADIATOR CROSS BRACING (BOLTED TO BOTTOM OF RADIATORS)

KUHLMAN ELECTRIC CORP.		CONSOLIDATED ELECTRIC SUPPLY COMPANY	
SHOP ORDER	SERIAL NUMBER	P.O. NUMBER	SUBSTATION
242710	242710-94-1	PNS-20804-120	KENNEDY SPACE CENTER/NASA
242710	242710-94-2	PNS-20804-120	KENNEDY SPACE CENTER/NASA

03 11/10/94. KC	ADDED NOTE TO BASE DET. ABOUT AIR CIRCULATION	02 10/12/94. KC	REWORKED TERMINAL CHAMBER PER CUSTOMERS REQUEST.
01 08/13/94. KC			

DWN: KC DATE: 08/13/94 | CKD: DU DATE: 08/16/94 | APP: DATE: | PAGE 1 OF 1

DIMENSION DRAWING

KUHLMAN CORPORATION
POWER TRANSFORMER DIV.
CRYSTAL SPRINGS, MS

DWG. NO. 242710-3803 | ISSUE 03

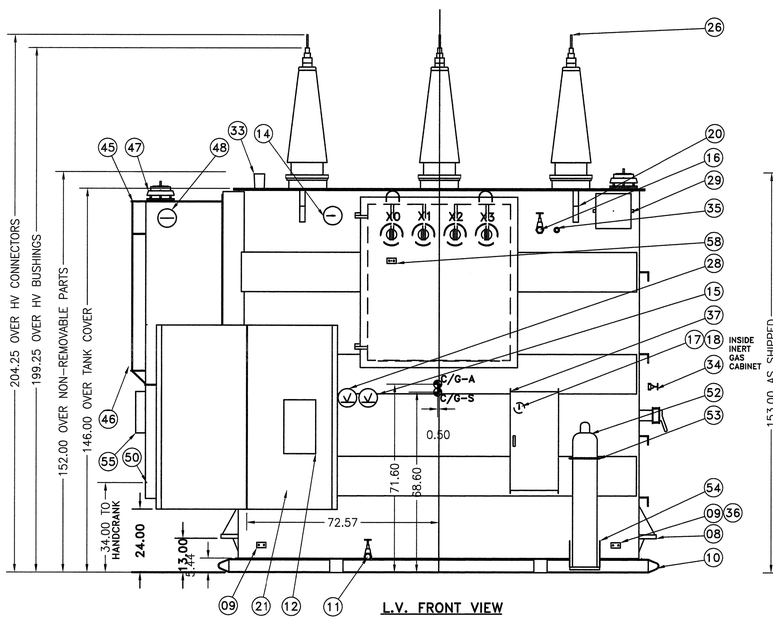

L.V. FRONT VIEW

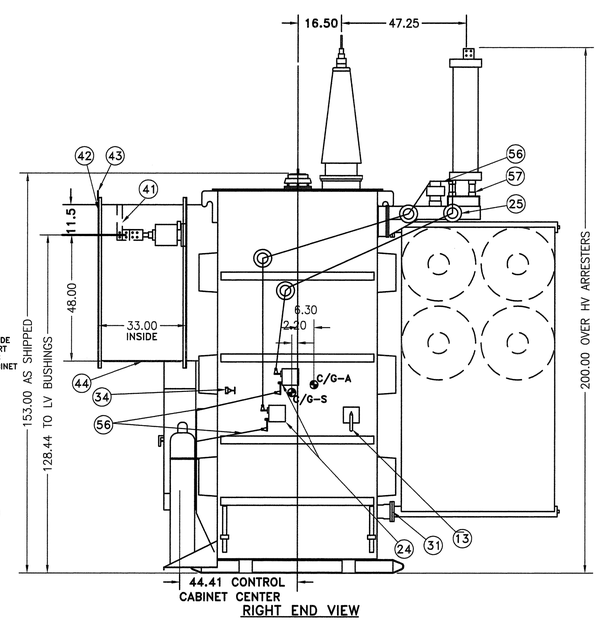

RIGHT END VIEW

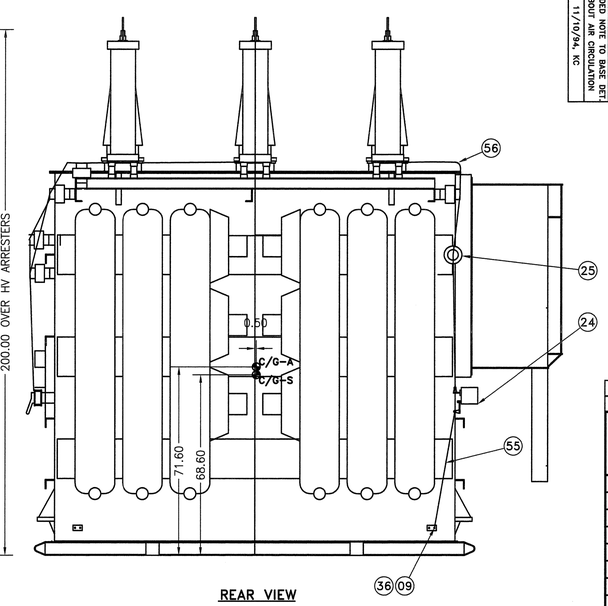

REAR VIEW

SYM.	ZONE	DESCRIPTION	DATE	APPROVED

REVISIONS

ENGINEER OF RECORD: LARRY JONES PE LICENSE NO. 19837
Fred Wilson & Associates, Inc.
Consulting Engineers
C.A. NO. 7188 • 904-398-8636
3970 Hendricks Avenue • Jacksonville, FL 32207

SIGNATURES		DATE
DESIGNED	M. YUDIN	9-09
DRAWN	B. GEMMELL	9-09
CHECKED	L. JONES	9-09
SUBMITTED		9/24/09
APPROVED		9/24/09
APPROVED		
APPROVED		
APPROVED		
APPROVED		
APPROVED		

NATIONAL AERONAUTICS AND SPACE ADMINISTRATION
JOHN F. KENNEDY SPACE CENTER, NASA
KENNEDY SPACE CENTER, FLORIDA

MODIFY C-5 SUBSTATION FOR RING BUS CONFIGURATION

TRANSFORMERS T9 & T10 OUTLINE AND DETAILS

FILE NO. | SIZE F | DWG. NO. 79K38551

PROJ. NO. PCN 98778 | SHEET 37 OF 37

A/E FILE No. 0601\0601-25\0601-25.5
FILE: E35.DWG
THIS DRAWING PREPARED BY AutoCAD 2008

E35

KSC FORM 1-11A (REV 6/91) (C/G 12/93) 09/23/2009 F:\ELECT\0601\0601-25\0601-25.5\E35