NOTICE – WHEN GOVERNMENT DRAWINGS, SPECIFICATIONS, OR OTHER DATA ARE USED FOR ANY PURPOSE OTHER THAN IN CONNECTION WITH A DEFINITELY RELATED GOVERNMENT PROCUREMENT OPERATION, THE UNITED STATES GOVERNMENT THEREBY INCURS NO RESPONSIBILITY NOR ANY OBLIGATION WHATSOEVER; AND THE FACT THAT THE GOVERNMENT MAY HAVE FORMULATED, FURNISHED, OR IN ANY WAY SUPPLIED THE SAID DRAWINGS, SPECIFICATIONS OR OTHER DATA IS NOT TO BE REGARDED BY IMPLICATION OR OTHERWISE AS IN ANY MANNER LICENSING THE HOLDER OR ANY OTHER PERSON OR CORPORATION, OR CONVEYING ANY RIGHTS OR PERMISSION TO MANUFACTURE, USE OR SELL ANY PATENTED INVENTION THAT MAY IN ANY WAY BE RELATED THERETO.

NATIONAL AERONAUTICS AND SPACE ADMINISTRATION
JOHN F. KENNEDY SPACE CENTER
Replace Pad B Switchgears

PCN 98778

INDEX OF DRAWINGS

FUNCTION CODE	SH. NO.	REV	TITLE
V1	1		VICINITY MAP, AREA MAP AND INDEX OF DRAWINGS
V2	2		SITE PLAN
E1	3		LEGEND AND GENERAL NOTES
E2	4		EXISTING 13.8 KV BLOCK DIAGRAM
E3	5		MODIFIED 13.8 KV BLOCK DIAGRAM
E4	6		SUBSTATION 1050–ECS EXISTING SINGLE LINE DIAGRAM
E5	7		SUBSTATION 1050–ECS SWITCHGEAR MODIFIED SINGLE DIAGRAM
E6	8		ECS MCC–A EXISTING SINGLE LINE DIAGRAM
E7	9		ECS MCC–A – MODIFIED SINGLE LINE DIAGRAM AND MISCELLANEOUS DETAILS
E8	10		ECS MCC–B – EXISTING SINGLE LINE DIAGRAM
E9	11		ECS MCC–B – MODIFIED SINGLE LINE DIAGRAM AND MISCELLANEOUS DETAILS
E10	12		PTCR APRON BUILDING – EXISTING ELECTRICAL PLAN
E11	13		ECS ROOM – EXISTING & MODIFIED ELECTRICAL PLANS
E12	14		PTCR APRON BUILDING – MODIFIED ELECTRICAL PLAN
E13	15		SUBSTATION 1050 – ECS – EXISTING SINGLE LINE DIAGRAM
E14	16		SW. STATION 1001 15KV SINGLE LINE DIAGRAM–MODIFIED
E15	17		SW. STATION 1001 15KV MAIN BREAKER CONTROL
E16	18		SW. STATION 1001 15KV FEEDER BREAKER CONTROL
E17	19		SW. STATION 1001 COMMUNICATION PROCESSOR AND PROTECTION RELAYS
E18	20		PAD B APRON BUILDING PCV–4
E19	21		EXISTING CONDUIT AND CABLE SCHEDULE
E20	22		NEW CONDUIT AND CABLE SCHEDULE
E21	23		MISCELANEOUS DETAILS
FA1	24		PAD B APRON BUILDING FLAME DETECTORS
FA2	25		FIRE PROTECTION DETAILS

VICINITY MAP

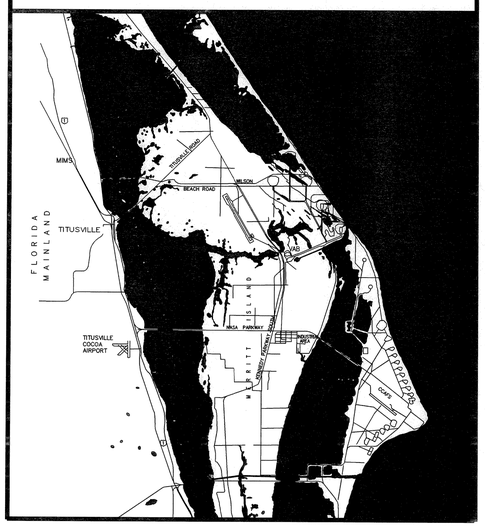

AREA MAP

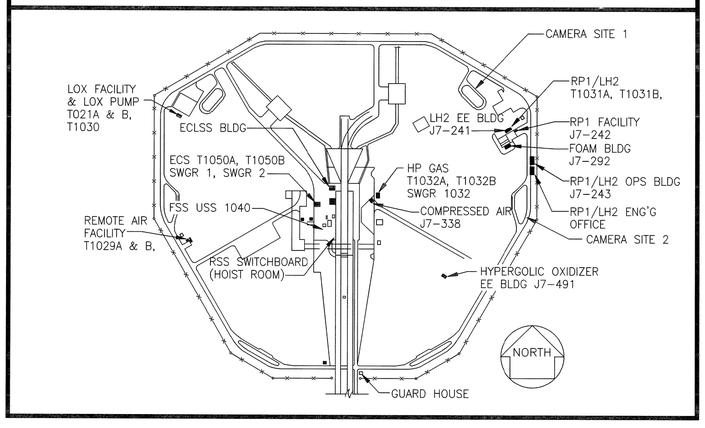

SENSITIVE BUT UNCLASSIFIED (SBU)
Instructions: This item must be reviewed under the requirements for "Sensitive But Unclassified Information" as described in NPR 1600.1 Material that is export–sensitive is automatically considered to contain SBU and does not require an SBU Reviewer signature. Material that is not export–sensitive must be reviewed for SBU as required per NASA Form 1686.

	Yes	No	SBU Reviewer's Signature	Date
Contains SBU?	☐	☑	Ernesto T. Camacho	9/29/09

EXPORT CONTROL (EC)
Instructions: Once it is determined the document includes EC data, contact the KSC ECO Help Desk at 867–9209 (or your directorate Export Control Rep) for a determination of the proper export category.

NOTE: If the document does not contain export–controlled technical data, it is considered EAR 99 NLR (No License Required) under the Export Administration Regulations of the Department of Commerce.

ECO Reviewer's Name and Organization	ECO Reviewer's Signature	Date
Ernesto T. Camacho, TA-83-B	Ernesto T. Camacho	9/29/09

	Determination (Check Only One Box) and Category	
EAR 99 NLR (No EC)	☑ EAR 99 NLR	The information contained in the document is technical in content, but not technical data as defined by the ITAR or the EAR and therefore is EAR 99 NLR (no export license required.) [General Prohibition Six (Embargo) applies to all items subject to the EAR, i.e. items on the CCL and within EAR 99 NLR. You may not make an export or re–export contrary to the provisions of part 746 (Embargos and Other Special Controls) of the EAR and 22 CFR part 126.1 of the ITAR.]
EAR Controlled	☐	This document is within the purview of the Export Administration Regulations (EAR), 15 CFR 730–774, and is export controlled. It may not be transferred to foreign nationals in the U.S. or abroad without specific approval of a knowledgeable NASA export control official, and/or unless an export license or license exception is obtained/available from Bureau of Industry and Security, United States Department of Commerce. Violations of these regulations are punishable by fine, imprisonment, or both.
ITAR Controlled	☐	This document contains information which falls under the purview of the U.S. Munitions List (USML), as defined in the International Traffic in Arms Regulations (ITAR), 22 CFR 120–130, and is export controlled. It shall not be transferred to foreign nationals, in the U.S. or abroad, without specific approval of a knowledgeable NASA export control official, and/or unless an export license or license exception is obtained/available from the United States Department of State. *Violations of these regulations are punishable by fine, imprisonment, or both.*

PROVIDE SHALL MEAN TO FURNISH AND INSTALL.
TECHNICAL SPECIFICATION 79K38549

NOTE: INFORMATION FOR THIS DRAWING PACKAGE EXTRACTED FROM DRAWINGS 79K35917 REV B AND 79K36014 REV A.

SYM.	ZONE	DESCRIPTION	DATE	APPROVED
		REVISIONS		

FRED WILSON & ASSOCIATES, INC
ENGINEERS
C. A. NO. 7188
FW&A
3970 HENDRICKS AVENUE
JACKSONVILLE, FL 32207

SIGNATURES		DATE
DESIGNED	D. TRANG	05/2009
DRAWN	B. PEARCE	05/2009
CHECKED		
SUBMITTED		9/29/09
APPROVED		9/29/09
APPROVED	E. Camacho	9/29/09
APPROVED		
APPROVED		
APPROVED		
APPROVED		

NATIONAL AERONAUTICS AND SPACE ADMINISTRATION
JOHN F. KENNEDY SPACE CENTER, NASA
KENNEDY SPACE CENTER, FLORIDA

REPLACE PAD B SWITCHGEARS

VICINITY MAP, AREA MAP AND INDEX OF DRAWINGS

FILE NO.	SIZE	DWG. NO.
	F	79K38550
PROJ. NO. 98778		SHEET 1 OF 25

V1

FILE: COVER.DWG THIS DRAWING PREPARED BY AutoCAD 2005

KSC FORM 1–11A (REV 6/91) (C/G 12/93)

NOTICE: WHEN GOVERNMENT DRAWINGS, SPECIFICATIONS, OR OTHER DATA ARE USED FOR ANY PURPOSE OTHER THAN IN CONNECTION WITH A DEFINITELY RELATED GOVERNMENT PROCUREMENT OPERATION, THE UNITED STATES GOVERNMENT THEREBY INCURS NO RESPONSIBILITY NOR ANY OBLIGATION WHATSOEVER; AND THE FACT THAT THE GOVERNMENT MAY HAVE FORMULATED, FURNISHED, OR IN ANY WAY SUPPLIED THE SAID DRAWINGS, SPECIFICATIONS, OR OTHER DATA IS NOT TO BE REGARDED BY IMPLICATION OR OTHERWISE AS IN ANY MANNER LICENSING THE HOLDER OR ANY OTHER PERSON OR CORPORATION, OR CONVEYING ANY RIGHTS OR PERMISSION TO MANUFACTURE, USE, OR SELL ANY PATENTED INVENTION THAT MAY IN ANY WAY BE RELATED THERETO.

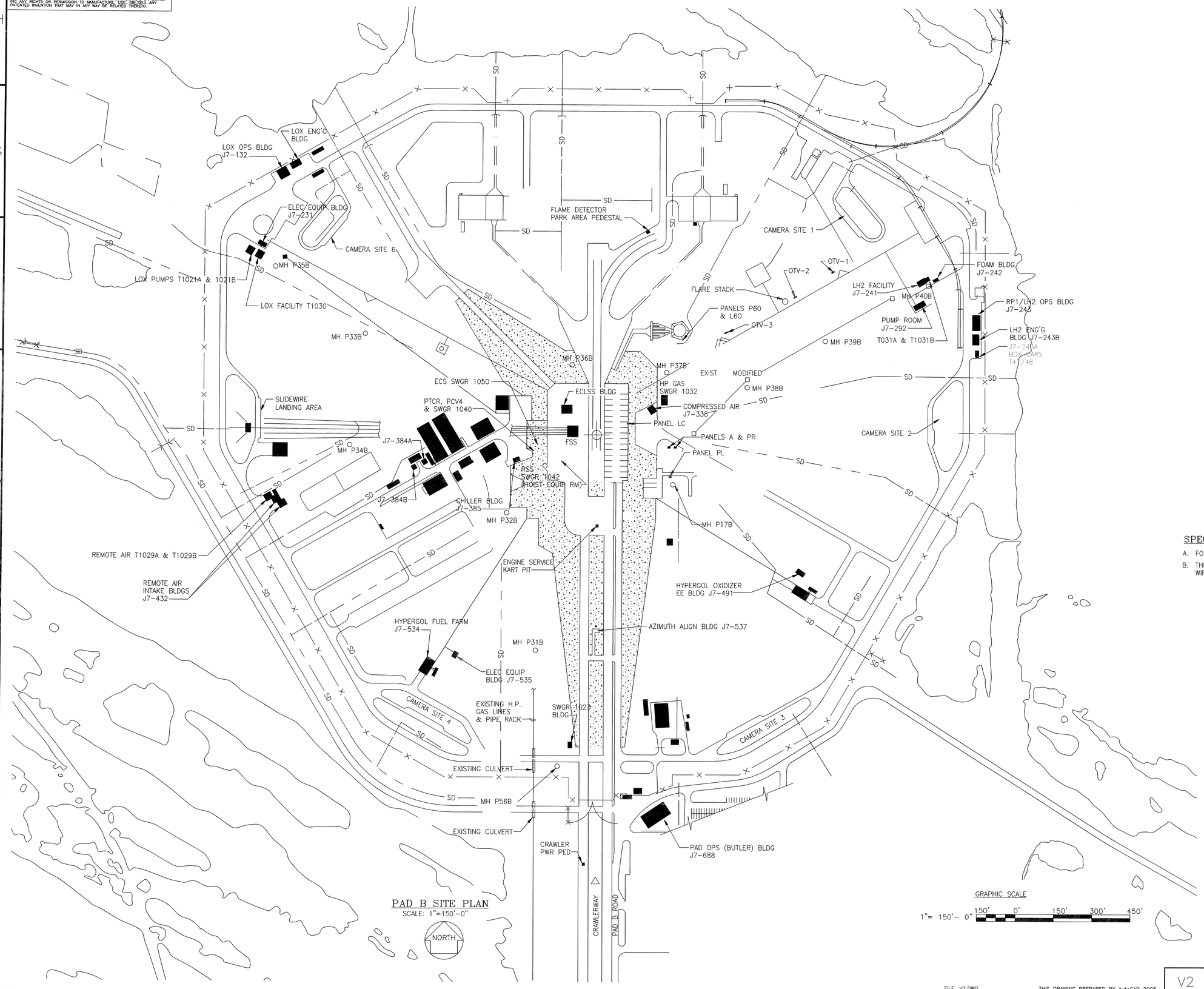

PAD B SITE PLAN

SCALE: 1"=150'-0"

GRAPHIC SCALE

1"= 150'- 0" 150' 0' 150' 300' 450'

SPECIFIC NOTES

A. FOR LEGEND AND GENERAL NOTES, SEE DRAWING E1.

B. THIS PLAN IS FOR RELATIONAL PURPOSES. NOT ALL UNDERGROUND WIRING IS SHOWN. REFER TO SPECIFIC SITE PLANS FOR DETAIL RUNS.

SYM.	ZONE	DESCRIPTION	DATE	APPROVED
		REVISIONS		

FRED WILSON & ASSOCIATES, INC
ENGINEERS
C. A. NO. 7188
3970 HENDRICKS AVENUE
JACKSONVILLE, FL 32207

SIGNATURES	DATE
DESIGNED D. TRANG	05/2009
DRAWN B. PEARCE	05/2009
CHECKED	
SUBMITTED	9/25/09
APPROVED	9/25/09
APPROVED	
APPROVED	
APPROVED	
APPROVED	
APPROVED	

NATIONAL AERONAUTICS AND SPACE ADMINISTRATION
JOHN F. KENNEDY SPACE CENTER, NASA
KENNEDY SPACE CENTER, FLORIDA

REPLACE PAD B SWITCHGEARS

SITE PLAN

FILE NO.	SIZE	DWG. NO.
	F	79K38550
PROJ. NO. 98778		SHEET 2

V2

FILE: V2.DWG

THIS DRAWING PREPARED BY AutoCAD 2005

KSC FORM 1-11A (REV 6/91) (C/G 12/93)

NOTICE – WHEN GOVERNMENT DRAWINGS, SPECIFICATIONS, OR OTHER DATA ARE USED FOR ANY PURPOSE OTHER THAN IN CONNECTION WITH A DEFINITELY RELATED GOVERNMENT PROCUREMENT OPERATION, THE UNITED STATES GOVERNMENT THEREBY INCURS NO RESPONSIBILITY NOR ANY OBLIGATION WHATSOEVER; AND THE FACT THAT THE GOVERNMENT MAY HAVE FORMULATED, FURNISHED, OR IN ANY WAY SUPPLIED THE SAID DRAWINGS, SPECIFICATIONS OR OTHER DATA, IS NOT TO BE REGARDED BY IMPLICATION OR OTHERWISE AS IN ANY MANNER LICENSING THE HOLDER OR ANY OTHER PERSON OR CORPORATION, OR CONVEYING ANY RIGHTS OR PERMISSION TO MANUFACTURE, USE, OR SELL ANY PATENTED INVENTION THAT MAY IN ANY WAY BE RELATED THERETO.

GENERAL NOTES

1. ALL ELECTRICAL MATERIAL, UNLESS NOTED AS EXISTING OR GOVERNMENT FURNISHED, IS NEW AND SHALL BE PROVIDED BY THE CONTRACTOR.
2. PROVIDE SHALL MEAN TO FURNISH AND INSTALL.
3. WHERE NEW EQUIPMENT TO BE INSTALLED DOES NOT OCCUPY THE SAME PHYSICAL LOCATION AS THE EXISTING EQUIPMENT TO BE REMOVED, THE CONTRACTOR SHALL HAVE ALL NEW SYSTEMS AND EQUIPMENT INSTALLED, TESTED AND PREPARED FOR ENERGIZING BEFORE REMOVING INDICATED EXISTING EQUIPMENT. WHERE THE NEW EQUIPMENT IS TO OCCUPY THE SAME PHYSICAL LOCATION AS THE EXISTING EQUIPMENT, CONTRACTOR SHALL INSTALL AS MUCH OF THE NEW SYSTEM AS PRACTICAL WITHOUT AN OUTAGE. ALL NEW EQUIPMENT SHALL BE ON SITE AND TESTED PRIOR TO AN OUTAGE ON ANY SYSTEM OR EQUIPMENT. COORDINATE ANY REQUIRED OUTAGES WITH THE GOVERNMENT PRIOR TO THE REMOVAL OF THE EXISTING EQUIPMENT.
4. CAUTION: PAINT ON WALL SURFACES, PANELS AND CONDUITS MAY CONTAIN PCB, LEAD AND OTHER HAZARDOUS METALS. THE CONTRACTOR SHALL COMPLY WITH THE "SPECIAL CONDITIONS" SECTION OF THE CONTRACT DOCUMENTS. THE CONTRACTOR SHALL ASSUME THAT ALL PAINTED SURFACES CONTAIN LEAD AND PCB UNLESS OTHERWISE NOTED.
5. ALL EXTERIOR ENCLOSURES SHALL BE NEMA 4X UNLESS OTHERWISE NOTED.
6. CONDUIT ROUTINGS ARE SHOWN DIAGRAMMATICALLY. ACTUAL LOCATIONS SHALL BE DETERMINED BY THE CONTRACTOR.
7. UNDERGROUND UTILITIES HAVE BEEN LOCATED BY REFERRING TO ALL KNOWN RECORD DRAWINGS, BY CONFERRING WITH PUBLIC WORKS PERSONNEL TOPOGRAPHIC SURVEY BY VISUAL OBSERVATIONS ALONG THE ROUTE AND BY THE USE OF UNDERGROUND LOCATORS. OTHER UNDERGROUND UTILITIES NOT FOUND OR SHOWN MAY BE PRESENT. THE LOCATIONS OF UTILITIES SHOWN ARE TO BE CONSIDERED APPROXIMATE ONLY, AND THE DRAWINGS SHALL NOT BE SCALED TO DETERMINE LOCATIONS. CONTRACTOR SHALL BE RESPONSIBLE FOR ALL UNDERGROUND UTILITIES INDICATED AND SHALL USE EXTREME CAUTION WHEN EXCAVATING. HAND DIGGING ONLY IS ALLOWED.
8. NOT USED
9. THE CONTRACTOR SHALL EXERCISE EXTREME CAUTION DURING CABLE INSTALLATION AND SPLICING IN THE EXISTING MANHOLES. THE MANHOLES CONTAIN ENERGIZED CIRCUITS (13.8KV & 600V) THAT MUST REMAIN IN SERVICE. ANY OUTAGES SHALL BE COORDINATED WITH THE GOVERNMENT.
10. ALL CONDUIT SHALL BE RIGID GALVANIZED UNLESS OTHERWISE NOTED.
11. ALL GROUND RODS SHALL BE INSTALLED BY THE WATER JETTING METHOD.
12. NOT USED
13. THE LOADS INDICATED IN THE "SERVES" COLUMN SHOWN ON THE EXISTING & MODIFIED PANEL SCHEDULES HAVE NOT BEEN FIELD VERIFIED. LOAD INFORMATION SHOWN WAS TAKEN FROM PANEL DIRECTORIES AND REFERENCE DRAWING 39K6150023.
14. PROVIDE LABELS FOR ALL NEW EQUIPMENT INDICATING: NAME, VOLTAGE, AMPERAGE, SOURCE & SERVICE.
15. ALL WORK PERFORMED AND EQUIPMENT INSTALLED DURING AN AUTHORIZED OUTAGE MUST BE COMPLETED AND OPERATIONAL WITHIN THE LIMITS OF THAT OUTAGE AS INDICATED IN "SPECIAL CONDITIONS".

GENERAL NOTES (CONT'D)

16. 15KV CABLE SHALL NOT BE PLACED ON THE GROUND AT ANY TIME DURING HANDLING OR INSTALLATION.
17. ASBESTOS COVERED CABLE (VARYING LENGTHS) HAS BEEN DETECTED IN MANHOLES. THE CONTRACTOR SHALL DISPOSE OF THE AFFECTED ACM IN COMPLIANCE WITH THE "SPECIAL CONDITIONS" IN THE CONTRACT DOCUMENTS.
18. THE CONTRACTOR SHALL BE RESPONSIBLE FOR VERIFYING THE EXISTING PHASE ROTATION AND PHASING OF THE EXISTING ELECTRICAL SYSTEMS OF 600 VOLTS AND BELOW, PRIOR TO THE REMOVAL OF ANY EQUIPMENT OR CONDUCTORS. THE CONTRACTOR SHALL PROVIDE QUALIFIED PERSONNEL AND APPROPRIATE LOW VOLTAGE TESTING EQUIPMENT REQUIRED TO SAFELY PERFORM THIS PHASING. THE CONTRACTOR SHALL MATCH THE EXISTING PHASE ROTATION AND PHASING WHEN INSTALLING EQUIPMENT OR CONDUCTORS IN EXISTING ELECTRICAL SYSTEMS. IF EXISTING COLOR CODING DOES NOT MATCH PHASE ROTATION FOUND, CONTRACTOR SHALL NOTIFY CONTRACTING OFFICER.
19. THE CONTRACTOR SHALL NOTIFY THE CONTRACTING OFFICER 14 WORKING DAYS PRIOR TO AN OUTAGE REQUIRING THE TESTING OF PHASING AND PHASE ROTATION OF ELECTRICAL SYSTEMS 600 VOLTS AND ABOVE. THE ISC SHALL IDENTIFY AND TAG THE PHASING AT EQUIPMENT AND SHALL PROVIDE TO THE CONTRACTOR, IN WRITING, THE RESULTS OF THE PHASING AND PHASE ROTATION TESTS. THE CONTRACTOR SHALL MAINTAIN GIVEN PHASING THROUGH ALL CONNECTION POINTS.
20. NOT USED
21. THE GOVERNMENT WILL PROVIDE GENERATOR SUPPORT. CONTRACTOR SHALL NOTIFY CONTRACTING OFFICER 14 DAYS PRIOR TO DAY GENERATOR SUPPORT IS REQUIRED.
22. IDENTIFICATION PLATES SHALL BE PROVIDED ON ALL NEW AND EXISTING EQUIPMENT/LOADS AND SECURED WITH STAINLESS STEEL SCREWS. IDENTIFICATION PLATES SHALL INDICATE LOAD AND SOURCE AND CONFORM TO SPECIFICATION SECTION 16003, PARAGRAPH TITLED "IDENTIFICATION PLATES".

PLAN LEGEND

- EXISTING LIGHTING OR DISTRIBUTION PANEL
- PROVIDE LIGHTING OR DISTRIBUTION PANEL AS INDICATED
- A — SPECIFIC NOTE REFERENCE
- PROVIDE CONDUIT & CONDUCTORS
- B–5 — HOME RUN TO PANEL B CKT 5
- CONDUIT TURNING UP OR TOWARD OBSERVER
- CONDUIT TURNING DOWN OR AWAY FROM OBSERVER
- R — REMOVE CONDUIT & CONDUCTORS, AS INDICATED
- RC — EXISTING CONDUIT TO REMAIN, REMOVE CONDUCTORS
- RC — EXISTING CONDUIT IN SLAB OR BELOW GRADE TO REMAIN, REMOVE CONDUCTORS AS INDICATED
- UE — PROVIDE CONDUCTORS IN EXISTING CONDUIT BELOW GRADE OR IN FLOOR SLAB
- UEN — PROVIDE CONDUIT AND CONDUCTORS BELOW GRADE AS INDICATED
- EC — PROVIDE CONDUCTORS IN EXISTING CONDUIT ABOVE FLOOR
- UE — EXISTING CONDUIT BELOW GRADE TO REMAIN
- UE — EXISTING CONDUIT BELOW GRADE TO REMAIN, REMOVE CONDUCTORS AS INDICATED
- E — EXISTING CONDUIT & CONDUCTORS
- A — ABANDONED CONDUIT
- RA — REMOVE CONDUCTORS, ABANDON CONDUIT
- FOC — FIBER OPTIC CABLE
- EXISTING CONDUCTORS
- (*) SEE CONDUIT AND CABLE SCHEDULE { *–ALPHA NOTATION = EXISTING CABLE SCHEDULE; *–NUMERIC NOTATION = NEW CABLE SCHEDULE }
- EXISTING TRIFURCATING SPLICE IN MANHOLE
- PROVIDE TRIFURCATING SPLICE IN MANHOLE
- EXISTING 1/C SPLICE IN MANHOLE
- PROVIDE 1/C SPLICE IN MANHOLE

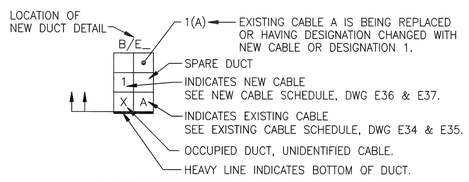

13.8KV DISTRIBUTION DUCT BANK SECTION DETAIL REFERENCE

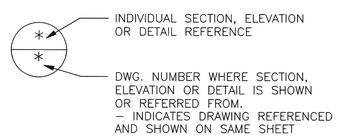

- COMM — COMMUNICATION CONDUCTOR BELOW GRADE
- W — WATER LINE ABOVE GRADE
- UW — WATER LINE BELOW GRADE
- USTRM — STORM DRAIN
- LIGHT POLE
- HANDHOLE
- MH — MANHOLE
- F — FIRE ALARM CONTROL PANEL
- PROTECTIVE PIPE BOLLARD

ABBREVIATIONS

3P	–	THREE POLE	CPT	–	CONTROL POWER TRANSFORMER	JB–* JCT BOX		JUNCTION BOX *–ALPHA NOTATION = EXISTING *–NUMERIC NOTATION = NEW	RECEP	–	RECEPTACLE
AFF	–	ABOVE FINISH FLOOR	CT	–	CURRENT TRANSFORMER				RGS	–	RIGID GALVANIZED STEEL
AIC	–	AMPS INTERRUPTING CAPACITY	CU	–	COPPER				SS	–	STAINLESS STEEL, SUBSTATION, SWITCH STATION
AHU	–	AIR HANDLING UNIT	D.B.	–	DIRECT BURIED				STRT	–	STARTER
ACM	–	ASBESTOS CONTAINING MATERIAL	D.S.	–	DISCONNECT SWITCH				SW	–	SWITCH
ATS	–	AUTOMATIC TRANSFER SWITCH	DISC.	–	DISCONNECT				SWBD	–	SWITCHBOARD
BKR	–	BREAKER	DISTR	–	DISTRIBUTION				SWGR	–	METAL CLAD SWITCHGEAR
BSD	–	BARE SOFT DRAWN	DWG	–	DRAWING				SW. STA.	–	SWITCH STATION
BLDG	–	BUILDING	EXIST	–	EXISTING				T.C.	–	TRAY CABLE
C.B.	–	CIRCUIT BREAKER	FA	–	FIRE ALARM				TVSS	–	TRANSIENT VOLTAGE SURGE SUPPRESSOR
CCS	–	COMPLEX CONTROL SYSTEM	FACP	–	FIRE ALARM CONTROL PANEL				UCS	–	UTILITIES CONTROL SYSTEM
CKT	–	CIRCUIT	F.O.	–	FIBER OPTIC				USS	–	UNIT SUBSTATION
C	–	CONDUIT	G GND	–	GROUND				UPS	–	UNINTERRUPTIBLE POWER SUPPLY
CN	–	CONCENTRIC NEUTRAL	GFI	–	GROUND FAULT INTERUPPTER				VFI	–	VACUUM FAULT INTERRUPTER
COMM	–	COMMUNICATION	GRS	–	GALVANIZED RIGID STEEL				WP	–	WEATHERPROOF
CONT'L	–	CONTROL(S)	HTR	–	HEATER				XFMR	–	TRANSFORMER
CONT	–	CONTACTOR	IAC	–	INTERLOCKED ARMORED CABLE						

kcmil	–	THOUSAND CIRCULAR MILS
LTG	–	LIGHTING
MCB	–	MAIN BREAKER
MC	–	METAL CLAD CABLE
MCC	–	MOTOR CONTROL CENTER
MH	–	MOUNTING HEIGHT
MI	–	MINERAL INSULATED CABLE
MLO	–	MAIN LUGS ONLY
MTS	–	MANUAL TRANSFER SWITCH
N.O.	–	NORMALLY OPEN
N.C.	–	NORMALLY CLOSED
PB	–	PULL BOX
PCV	–	PAD CABLE VAULT
PNL	–	PANEL
PT	–	POTENTIAL TRANSFORMER

SINGLE LINE LEGEND

- A — SPECIFIC NOTE REFERENCE
- DRY TYPE TRANSFORMER
- TRANSFORMER DELTA CONNECTED GROUNDED WYE CONNECTED
- SURGE ARRESTOR
- PROVIDE CABLE TERMINATION
- EXISTING CABLE TERMINATION
- EXISTING CONDUCTORS
- PROVIDE CONDUCTORS
- EXISTING CABLE SPLICE IN JUNCTION BOX OR MANHOLE
- PROVIDE CABLE SPLICE IN JUNCTION BOX OR MANHOLE
- R — REMOVE CONDUCTORS
- A — ABANDON CONDUCTORS AND CONDUIT
- PRIMARY SWITCH 13.8kV
- EXISTING LIGHTING OR DISTRIBUTION PANEL MLO – MAIN LUGS ONLY M.B. MAIN BREAKER
- P13 — PROVIDE LIGHTING OR DISTRIBUTION PANEL AS INDICATED MLO – MAIN LUGS ONLY M.B. MAIN BREAKER
- A N — TRANSFER SWITCH (ATS – AUTOMATIC TRANSFER SWITCH; MTS – MANUAL TRANSFER SWITCH)
- 3 / 1200/5 — CURRENT TRANSFORMER (THREE). RATIO AS INDICATED. DOT INDICATES POLARITY.
- CURRENT TRANSFORMER
- 1200/5 C500/5 MR — MULTIRATIO CT'S DOT INDICATES POLARITY. 1200/5 = MAX RATIO; C500/5 = CONNECTED RATIO
- CM4000 — MULTIFUNCTION POWER MONITOR (SQUARE D MODEL CM4000)
- VOLTAGE TRANSFORMER AND FUSE
- RECEPTACLE, 30A, 480V, 3ø
- RECEPTACLE, 200A, 480V, 3ø
- RECEPTACLE, 400A, 480V, 3ø
- RECEPTACLE, 60A, 480V, 3ø
- WT — WEATHERPROOF RECEPTACLE, 20A, 480V, 3ø
- FUSE
- 1600/800 — MOLDED CASE CIRCUIT BREAKER 1600A FRAME SIZE – 800A TRIP
- DRAW-OUT AIR CIRCUIT BREAKER
- A — A=AMMETER (EXISTING) V=VOLTMETER (EXISTING)
- AS — A=AMMETER SWITCH (EXISTING) V=VOLTMETER SWITCH (EXISTING)
- MF — MULTIFUNCTION RELAY 27,47,59,81
- 3 — LIGHTING CONTACTOR (NUMBER INDICATES CONTACTOR SIZE)

SINGLE LINE LEGEND (CONT'D)

- 1 PH VOLTAGE REGULATING XFMR
- PLC — PROGRAMMABLE LOGIC CONTROLLER
- 83 — 83 RELAY (AUTOMATIC SELECTIVE CONTROL TRANSFER RELAY)
- 25 — SYNCHRONIZATION CHECK RELAY
- K — KIRK KEY INTERLOCK
- GROUND
- F — FIRE ALARM CONTROL PANEL
- VACUUM INTERUPTER
- FIRE ALARM DISCONNECT DEVICE
- POWER TERMINAL BLOCK – EXISTING
- PROVIDE POWER TERMINAL BLOCK
- DEAD END CONDUCTOR
- (*) SEE CONDUIT AND CABLE SCHEDULE { *–ALPHA NOTATION = EXISTING CABLE SCHEDULE; *–NUMERIC NOTATION = NEW CABLE SCHEDULE }
- ST — SHUNT TRIP
- COMBINATION TYPE – MAGNETIC MOTOR CONTROLLER AND DISCONNECT DEVICE
- MANUAL MOTOR STARTER
- VFD — VARIABLE FREQUENCY DRIVE
- MAGNETIC MOTOR CONTROLLER OR CONTACTOR
- FUSED SWITCH
- MOTOR
- TB — TEST BLOCK
- TVSS — PROVIDE TRANSIENT VOLTAGE SURGE SUPPRESSER
- DISCONNECT SWITCH – SIZE AND POLE AS INDICATED NF – NON FUSED
- CB — ENCLOSED CIRCUIT BREAKER SIZE AND POLE AS INDICATED
- JB — JUNCTION BOX
- HEATER
- E — ELECTRICALLY OPERATED DEVICE.
- E — COORDINATION AND CONTROL OF (E)
- EXISTING EQUIPMENT
- PROVIDE EQUIPMENT
- REMOVE EQUIPMENT
- 27/59 — UNDERVOLTAGE/OVERVOLTAGE RELAY
- 1(GE) — INDICATES EXISTING CABLE (GE) IS EITHER BEING REPLACED BY CABLE 1, OR BEING RETAGGED AS CABLE 1.

SYM.	ZONE	DESCRIPTION	DATE	APPROVED
		REVISIONS		

FRED WILSON & ASSOCIATES, INC ENGINEERS
C. A. NO. 7188
3970 HENDRICKS AVENUE
JACKSONVILLE, FL 32207

SIGNATURES		DATE
DESIGNED	D. TRANG	05/2009
DRAWN	B. PEARCE	05/2009
CHECKED		
SUBMITTED		9/2/09
APPROVED		9/2/09
APPROVED		
APPROVED		
APPROVED		
APPROVED		
APPROVED		

NATIONAL AERONAUTICS AND SPACE ADMINISTRATION
JOHN F. KENNEDY SPACE CENTER, NASA
KENNEDY SPACE CENTER, FLORIDA

REPLACE PAD B SWITCHGEARS

LEGEND AND GENERAL NOTES

FILE NO.	SIZE	DWG. NO.
	F	79K38550
PROJ. NO. 98778		SHEET 3

E1

FILE: E1.DWG

THIS DRAWING PREPARED BY AutoCAD 2005

KSC FORM 1–11A (REV 6/91) (C/G 12/93)

NOTICE – WHEN GOVERNMENT DRAWINGS, SPECIFICATIONS, OR OTHER DATA ARE USED FOR ANY PURPOSE OTHER THAN IN CONNECTION WITH A DEFINITELY RELATED GOVERNMENT PROCUREMENT OPERATION, THE UNITED STATES GOVERNMENT THEREBY INCURS NO RESPONSIBILITY NOR ANY OBLIGATION WHATSOEVER; AND THE FACT THAT THE GOVERNMENT MAY HAVE FORMULATED, FURNISHED, OR IN ANY WAY SUPPLIED THE SAID DRAWINGS, SPECIFICATIONS, OR OTHER DATA IS NOT TO BE REGARDED BY IMPLICATION OR OTHERWISE AS IN ANY MANNER LICENSING THE HOLDER OR ANY OTHER PERSON OR CORPORATION, OR CONVEYING ANY RIGHTS OR PERMISSION TO MANUFACTURE, USE, OR SELL ANY PATENTED INVENTION THAT MAY IN ANY WAY BE RELATED THEREBY.

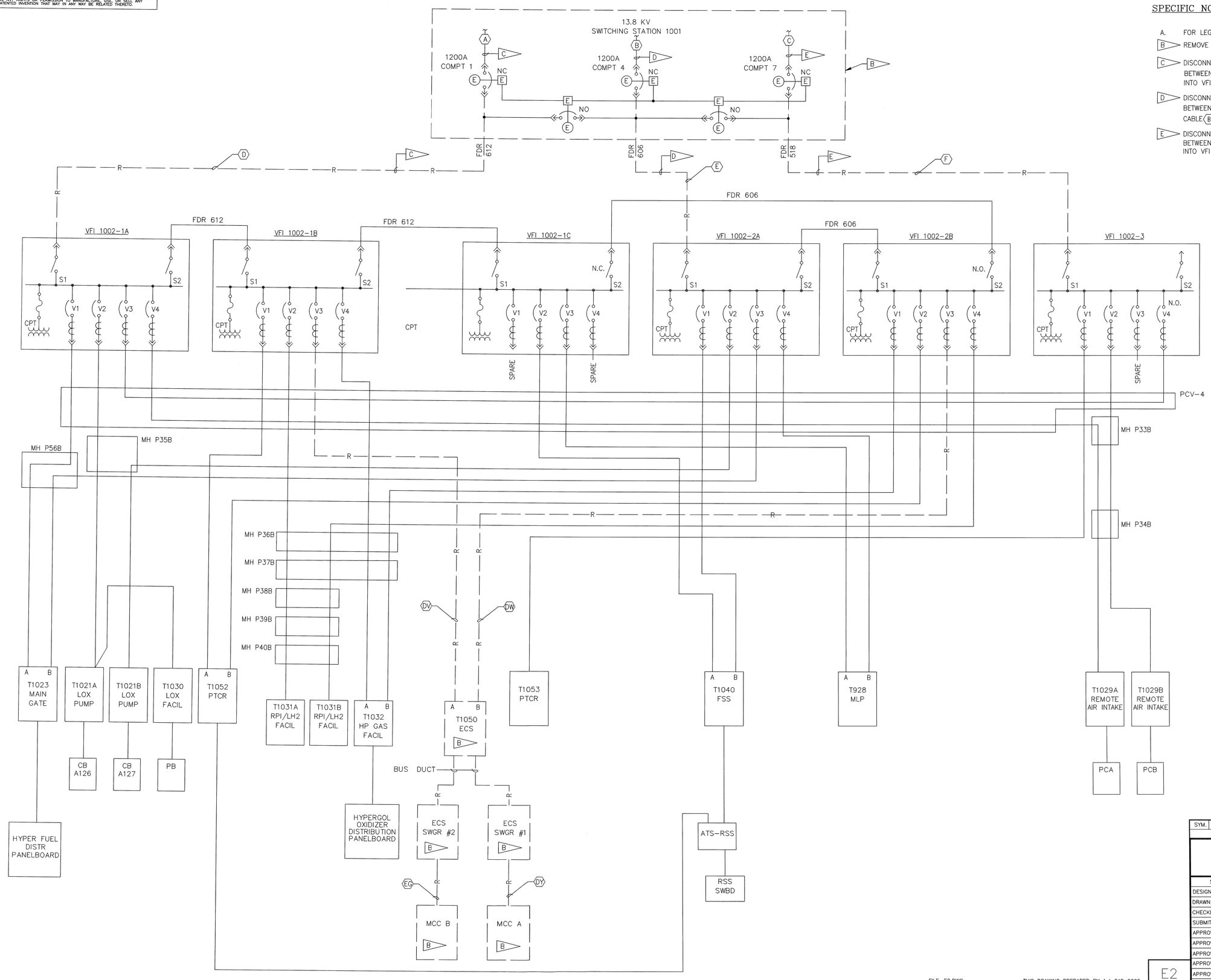

SPECIFIC NOTES:

A. FOR LEGEND AND GENERAL NOTES, SEE DRAWING E1.

B> REMOVE EQUIPMENT

C> DISCONNECT CABLE (A) FROM SW. STATION 1001. REMOVE CABLE (D) BETWEEN SW. STATION 1001 AND VFI 1002-1A. RETERMINATE CABLE (A) INTO VFI 1002-1A/POSITION S1

D> DISCONNECT CABLE (B) FROM SW. STATION 1001. REMOVE CABLE (E) BETWEEN SW. STATION 1001 AND VFI 1002-2A/POSITION S1. RETERMINATE CABLE (B) INTO VFI 1002-2A/POSITION S1

E> DISCONNECT CABLE (C) FROM SW. STATION 1001. REMOVE CABLE (F) BETWEEN SW. STATION 1001 AND VFI 1002-3. RETERMINATE CABLE (C) INTO VFI 1002-3/POSITION S1

SYM.	ZONE	DESCRIPTION	DATE	APPROVED
		REVISIONS		

FRED WILSON & ASSOCIATES, INC
ENGINEERS
C. A. NO. 7188
FW&A
3970 HENDRICKS AVENUE
JACKSONVILLE, FL 32207

SIGNATURES		DATE
DESIGNED	D. TRANG	05/2009
DRAWN	B. PEARCE	05/2009
CHECKED		
SUBMITTED		9/21/09
APPROVED		9/28/09
APPROVED		
APPROVED		
APPROVED		
APPROVED		
APPROVED		

NATIONAL AERONAUTICS AND SPACE ADMINISTRATION
JOHN F. KENNEDY SPACE CENTER, NASA
KENNEDY SPACE CENTER, FLORIDA

REPLACE PAD B SWITCHGEARS

EXISTING 13.8KV BLOCK DIAGRAM

FILE NO.	SIZE	DWG. NO.
	F	79K38550
PROJ. NO. 98778		SHEET 4

E2

FILE: E2.DWG

THIS DRAWING PREPARED BY AutoCAD 2005

KSC FORM 1-11A (REV 6/91) (C/G 12/93)

NOTICE — WHEN GOVERNMENT DRAWINGS, SPECIFICATIONS, OR OTHER DATA ARE USED FOR ANY PURPOSE OTHER THAN IN CONNECTION WITH A DEFINITELY RELATED GOVERNMENT PROCUREMENT OPERATION, THE UNITED STATES GOVERNMENT THEREBY INCURS NO RESPONSIBILITY NOR ANY OBLIGATION WHATSOEVER; AND THE FACT THAT THE GOVERNMENT MAY HAVE FORMULATED, FURNISHED, OR IN ANY WAY SUPPLIED THE SAID DRAWINGS, SPECIFICATIONS, OR OTHER DATA, IS NOT TO BE REGARDED BY IMPLICATION OR OTHERWISE AS IN ANY MANNER LICENSING THE HOLDER OR ANY OTHER PERSON OR CORPORATION, OR CONVEYING ANY RIGHTS OR PERMISSION TO MANUFACTURE, USE OR SELL ANY PATENTED INVENTION THAT MAY IN ANY WAY BE RELATED THEREBY.

SPECIFIC NOTES:

A. FOR LEGEND AND GENERAL NOTES, SEE DRAWING E1.

B. NOT USED

C. PROVIDE EQUIPMENT.

D. THIS DRAWING REFLECTS CONSTRUCTION PHASES IMPLEMENTED UNDER PROJECTS 96702.1, 96702.2 & 96702.3.

E. REPLACED UNDER 79K36517 REV. A

F. RETERMINATE EXISTING CABLE IN NEW EQUIPMENT. IF THE CABLE IS TOO SHORT TO RETERMINATE, THE CONTRACTOR SHALL PROVIDE SPLICE TO EXISITNG CABLE IN PCV-4

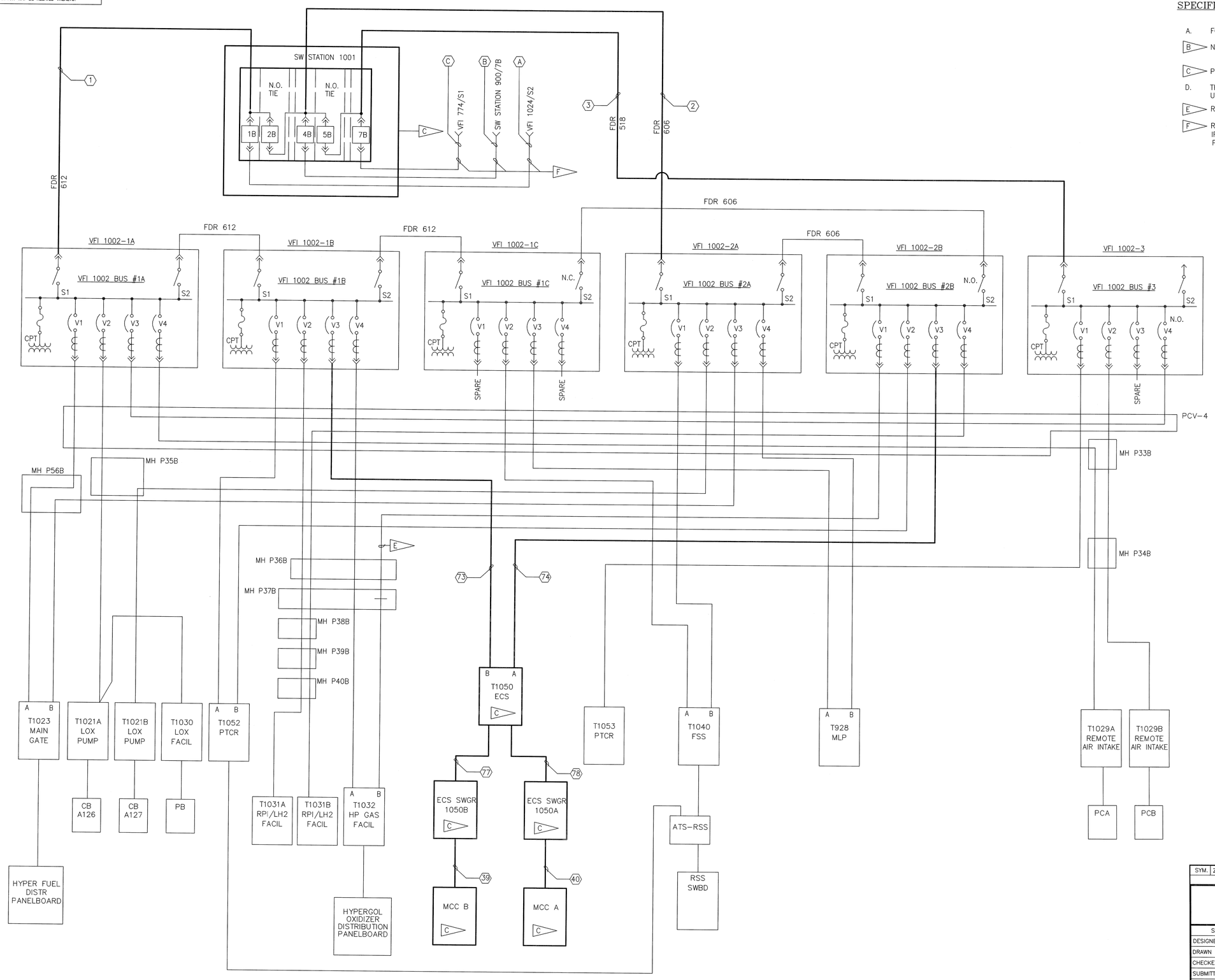

SYM.	ZONE	DESCRIPTION	DATE	APPROVED

REVISIONS

FRED WILSON & ASSOCIATES, INC
ENGINEERS
C. A. NO. 7188
FW&A
3970 HENDRICKS AVENUE
JACKSONVILLE, FL 32207

NATIONAL AERONAUTICS AND SPACE ADMINISTRATION
JOHN F. KENNEDY SPACE CENTER, NASA
KENNEDY SPACE CENTER, FLORIDA

SIGNATURES	DATE
DESIGNED D. TRANG	05/2009
DRAWN B. PEARCE	05/2009
CHECKED	
SUBMITTED	9/2/09
APPROVED	9/2/09
APPROVED	
APPROVED	
APPROVED	
APPROVED	
APPROVED	

REPLACE PAD B SWITCHGEARS

MODIFIED 13.8KV BLOCK DIAGRAM

FILE NO. | SIZE F | DWG. NO. 79K38550

PROJ. NO. 98778 | SHEET 5

E3

FILE: E3.DWG

THIS DRAWING PREPARED BY AutoCAD 2005

KSC FORM 1-11A (REV 6/91) (C/G 12/93)

NOTICE – WHEN GOVERNMENT DRAWINGS, SPECIFICATIONS, OR OTHER DATA ARE USED FOR ANY PURPOSE OTHER THAN IN CONNECTION WITH A DEFINITELY RELATED GOVERNMENT PROCUREMENT OPERATION, THE UNITED STATES GOVERNMENT THEREBY INCURS NO RESPONSIBILITY NOR ANY OBLIGATION WHATSOEVER; AND THE FACT THAT THE GOVERNMENT MAY HAVE FORMULATED, FURNISHED, OR IN ANY WAY SUPPLIED THE SAID DRAWINGS, SPECIFICATIONS OR OTHER DATA IS NOT TO BE REGARDED BY IMPLICATION OR OTHERWISE AS IN ANY MANNER LICENSING THE HOLDER OR ANY OTHER PERSON OR CORPORATION, OR CONVEYING ANY RIGHTS OR PERMISSION TO MANUFACTURE, USE, OR SELL ANY PATENTED INVENTION THAT MAY IN ANY WAY BE RELATED THERETO.

ECS SUBSTATION 1050 [B]

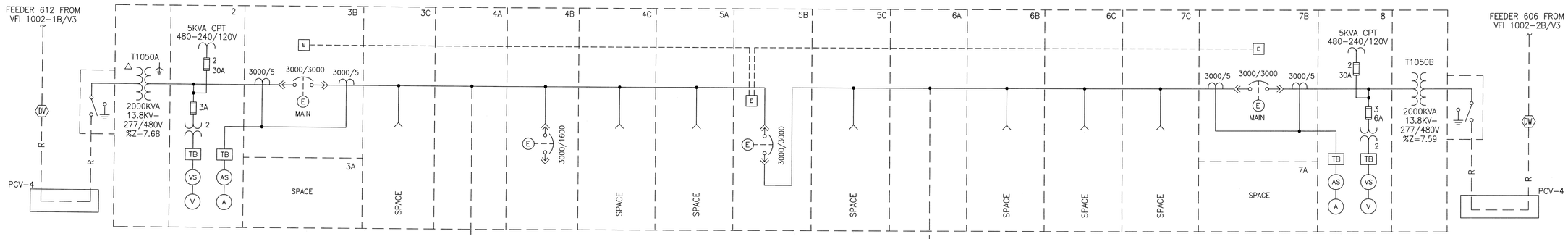

[B] COPPER BUS BAR IN (1) 5"x20" DUCT & (1) 12"x20" DUCT

[B] COPPER BUS BAR IN (1) 5"x20" DUCT & (1) 12"x20" DUCT

ECS SWITCHGEAR NO. 2 [B]

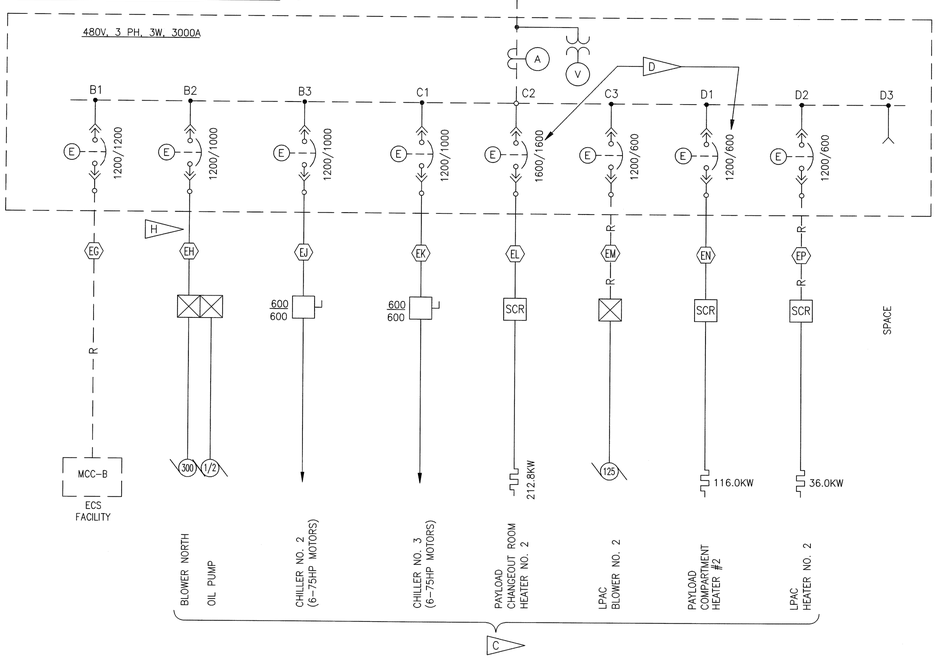

ECS SWITCHGEAR NO. 1 [B]

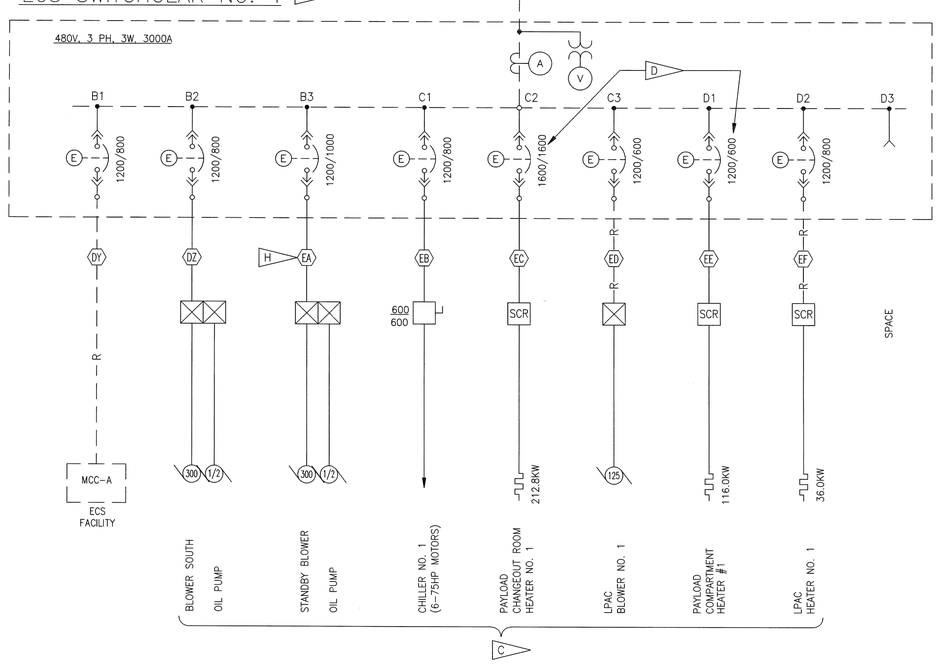

SPECIFIC NOTES:

A. FOR LEGEND AND GENERAL NOTES, SEE DRAWING E1.

[B] REMOVE EQUIPMENT.

[C] EQUIPMENT TO REMAIN.

[D] BREAKERS INDICATED ARE CONTROLLED BY ECS VIA PATCH & HIM RACKS. PRIOR TO DISCONNECTING THE BRANCH BREAKER CONTROL & INDICATION LEADS, THE CONTRACTOR SHALL IDENTIFY & LABEL ALL ASSOCIATED CONTROL & INDICATION CIRCUITS.

[E] NOT USED

[F] NOT USED

G. THE GOVERNMENT SHALL DISCONNECT, LABEL & SECURE ALL EXISTING CONTROL & INDICATION WIRING CONNECTING TO THE SWITCHGEAR. THE CONTRACTOR SHALL PROVIDE ADDITIONAL TERMINAL BLOCKS AS REQUIRED INSIDE THE TOP OF THE SWITCHGEAR. THE GOVERNMENT SHALL RECONNECT THE EXISTING EXTERNAL CONTROL & INDICATION WIRING TO THE TERMINAL BLOCKS. THE CONTRACTOR SHALL CONNECT SWITCHGEAR WIRING TO THE TERMINAL BLOCKS.

[H] REROUTE EXISTING CABLES TO NEW PANEL ECS.

SYM.	ZONE	DESCRIPTION	DATE	APPROVED
		REVISIONS		

FRED WILSON & ASSOCIATES, INC
ENGINEERS
C. A. NO. 7188
3970 HENDRICKS AVENUE
JACKSONVILLE, FL 32207

SIGNATURES		DATE
DESIGNED	D. TRANG	05/2009
DRAWN	B. PEARCE	05/2009
CHECKED		
SUBMITTED		9/26/09
APPROVED		9/28/09
APPROVED		
APPROVED		
APPROVED		
APPROVED		
APPROVED		

NATIONAL AERONAUTICS AND SPACE ADMINISTRATION
JOHN F. KENNEDY SPACE CENTER, NASA
KENNEDY SPACE CENTER, FLORIDA

REPLACE PAD B SWITCHGEARS

SUBSTATION 1050 – ECS
EXISTING SINGLE LINE DIAGRAM

FILE NO. | SIZE F | DWG. NO. 79K38550
PROJ. NO. 98778 | SHEET 6

E4

FILE: E4.DWG

THIS DRAWING PREPARED BY AutoCAD 2005

KSC FORM 1-11A (REV 6/91) (C/G 12/93)

NOTICE – WHEN GOVERNMENT DRAWINGS, SPECIFICATIONS, OR OTHER DATA ARE USED FOR ANY PURPOSE OTHER THAN IN CONNECTION WITH A DEFINITELY RELATED GOVERNMENT PROCUREMENT OPERATION, THE UNITED STATES GOVERNMENT THEREBY INCURS NO RESPONSIBILITY NOR ANY OBLIGATION WHATSOEVER; AND THE FACT THAT THE GOVERNMENT MAY HAVE FORMULATED, FURNISHED, OR IN ANY WAY SUPPLIED THE SAID DRAWINGS, SPECIFICATIONS OR OTHER DATA IS NOT TO BE REGARDED BY IMPLICATION OR OTHERWISE AS IN ANY MANNER LICENSING THE HOLDER OR ANY OTHER PERSON OR CORPORATION, OR CONVEYING ANY RIGHTS OR PERMISSION TO MANUFACTURE, USE, OR SELL ANY PATENTED INVENTION THAT MAY IN ANY WAY BE RELATED THERETO.

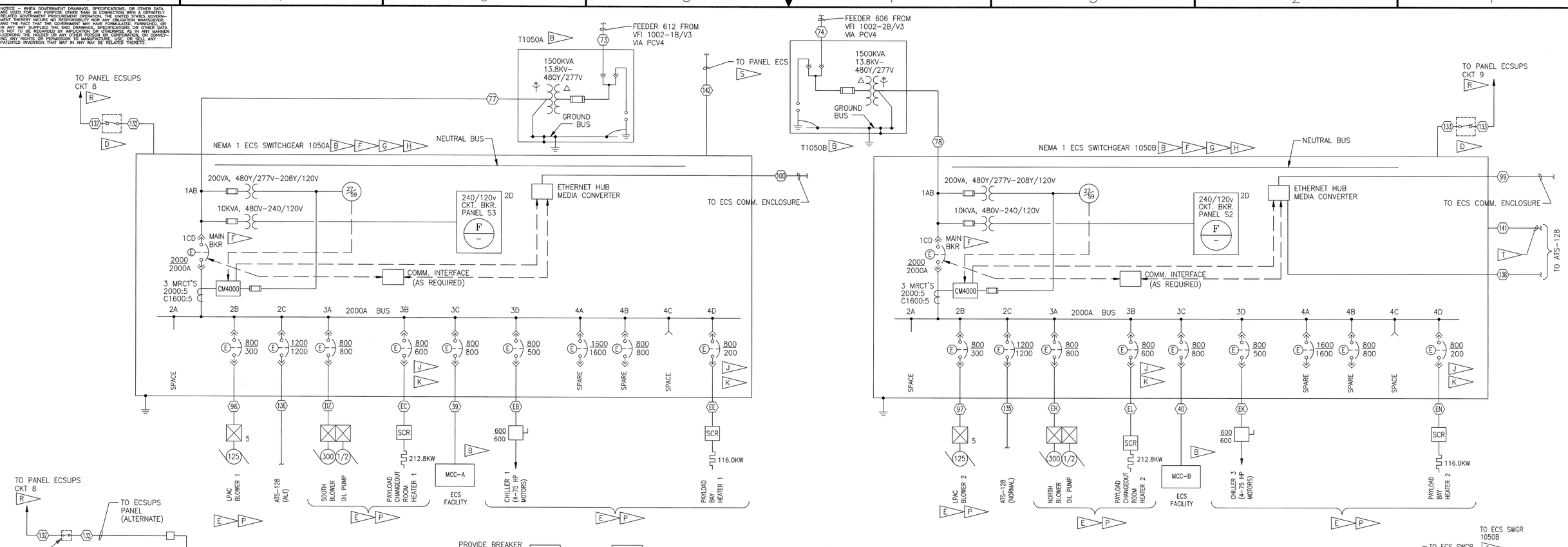

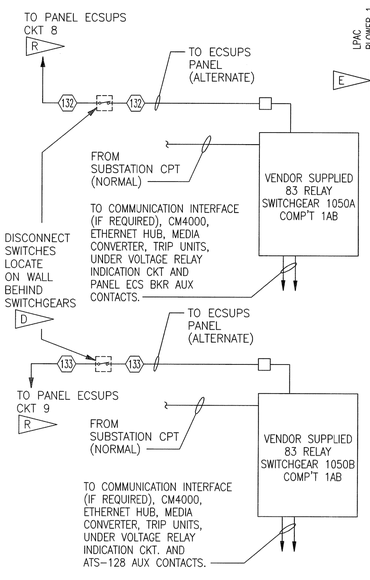

CONTROL POWER TRANSFER RELAY WIRING DIAGRAM

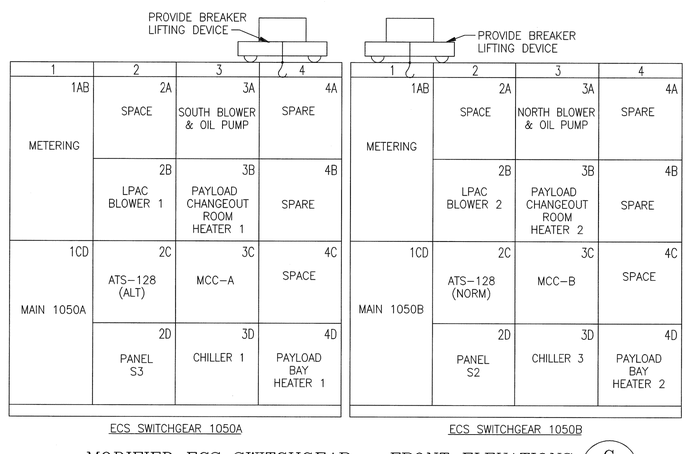

MODIFIED ECS SWITCHGEAR – FRONT ELEVATIONS (G)
NOT TO SCALE

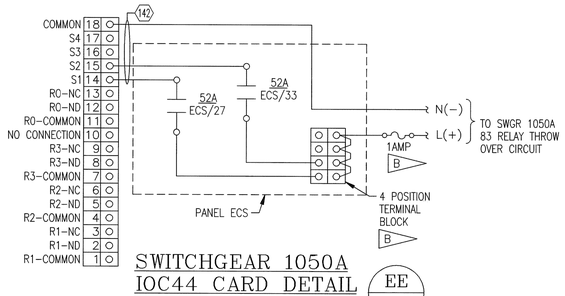

SWITCHGEAR 1050A IOC44 CARD DETAIL (EE)

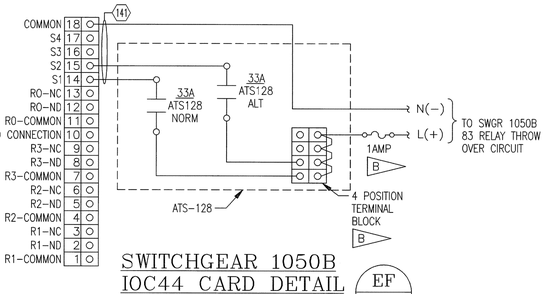

SWITCHGEAR 1050B IOC44 CARD DETAIL (EF)

SPECIFIC NOTES:

A. FOR LEGEND AND GENERAL NOTES, SEE DRAWING E1.

B. PROVIDE EQUIPMENT.

C. ALL CONDUIT AND CABLE ENTRIES SHALL BE FROM THE TOP.

D. PROVIDE 1-POLE NON-FUSED 30A HEAVY DUTY DISCONNECT SWITCH

E. EXISTING EQUIPMENT.

F. ALL BREAKERS IN SWITCHGEAR SHALL BE RATED AT 65KAIC MINIMUM. MAIN BREAKER TRIP UNIT SHALL HAVE LONG TIME AND SHORT TIME TRIP FUNCTIONS. FEEDER BREAKER TRIP UNITS SHALL HAVE LONG TIME, SHORT TIME & INSTANTANEOUS TRIP FUNCTIONS. PROVIDE AUXILIARY CONTACTS ON ALL BREAKERS FOR INDICATION TO ECS CONSOLE.

G. ADJUST BREAKER COMPARTMENT NUMBERING SCHEME TO SUIT EQUIPMENT FURNISHED.

H. ALL BREAKERS SHALL BE CAPABLE OF BEING CONTROLLED BY & INDICATION TO KCCS VIA THE COMMUNICATION INTERFACE. (BREAKER AUXILIARY CONTACTS SHALL BE PROVIDED FOR THE INDICATION FUNCTION).

J. THE GOVERNMENT SHALL DISCONNECT, LABEL & SECURE ALL EXISTING CONTROL & INDICATION WIRING CONNECTING TO THE SWITCHGEAR. THE CONTRACTOR SHALL PROVIDE ADDITIONAL TERMINAL BLOCKS AS REQUIRED INSIDE THE TOP OF THE SWITCHGEAR. THE GOVERNMENT SHALL RECONNECT THE EXISTING EXTERNAL CONTROL & INDICATION WIRING TO THE TERMINAL BLOCKS. THE CONTRACTOR SHALL CONNECT SWITCHGEAR WIRING TO THE TERMINAL BLOCKS.

K. PROVIDE 28VDC RELAY IN BREAKER COMPARTMENT INDICATED. THE RELAY SHALL HAVE A SUFFICIENT QUANTITY OF CONTACTS WIRED TO TERMINAL BLOCKS TO PROVIDE BREAKER CONTROL FROM ECS CONSOLES VIA PATCH & HIM RACKS. (BREAKER AUXILIARY CONTACTS SHALL BE PROVIDED FOR THE INDICATION FUNCTION TO THE ECS CONSOLES). THE CONTRACTOR SHALL RECONNECT THE EXISTING CONTROL CONDUCTORS TO THE APPLICABLE TERMINAL BLOCKS.

L. 480V BUS VOLTAGE SHALL BE MONITORED BY THE CM4000.

M. CONTRACTOR SHALL PERFORM FUNCTIONALITY TEST TO ASSURE CORRECT EQUIPMENT PERFORMANCE. TESTS SHALL BE WITNESSED BY THE CONTRACTING OFFICER OR THEIR ASSIGNED REPRESENTATIVE.

N. RECONNECT EXISTING GROUND CONDUCTOR TO SWITCHGEAR GROUND BUSSES.

P. PROVIDE NEW LABELS AT LOAD. FASTEN NEW LABELS TO LOADS WITH STAINLESS STEEL SCREWS. INDICATE LOAD AND SOURCE. SEE SPECIFICATION SECTION 16003 PARAGRAPH TITLED "IDENTIFICATION PLATES".

R. PROVIDE 1-POLE 20A CIRCUIT BREAKER IN EXISTING PANEL ECSUPS

S. ROUTE CABLE (142) TO SWGR 1050A IOC44 CARD. SEE DETAIL (EE)

T. ROUTE CABLE (141) TO SWGR 1050B IOC44 CARD. SEE DETAIL (EF)

U. CONTRACTOR TO SUPPLY CIRCUIT BREAKERS

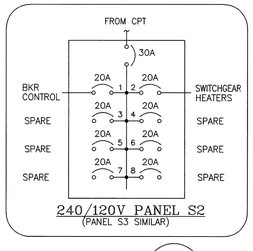

DETAIL (F)

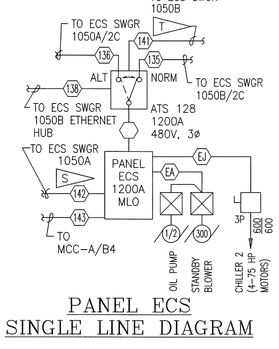

PANEL ECS SINGLE LINE DIAGRAM

SYM.	ZONE	DESCRIPTION	DATE	APPROVED
		REVISIONS		

FRED WILSON & ASSOCIATES, INC ENGINEERS
C. A. NO. 7188
FW&A
3970 HENDRICKS AVENUE
JACKSONVILLE, FL 32207

SIGNATURES		DATE
DESIGNED	D. TRANG	05/2009
DRAWN	B. PEARCE	05/2009
CHECKED		
SUBMITTED		9/28/09
APPROVED		9/28/09
APPROVED		
APPROVED		
APPROVED		
APPROVED		
APPROVED		

NATIONAL AERONAUTICS AND SPACE ADMINISTRATION
JOHN F. KENNEDY SPACE CENTER, NASA
KENNEDY SPACE CENTER, FLORIDA

REPLACE PAD B SWITCHGEARS

SUBSTATION 1050-ECS SWITCHGEAR MODIFIED SINGLE LINE DIAGRAM

FILE NO. | SIZE F | DWG. NO. 79K38550
PROJ. NO. 98778 | SHEET 7

E5

FILE: E5.DWG THIS DRAWING PREPARED BY AutoCAD 2005

KSC FORM 1-11A (REV 6/91) (C/G 12/93)

NOTICE – WHEN GOVERNMENT DRAWINGS, SPECIFICATIONS, OR OTHER DATA ARE USED FOR ANY PURPOSE OTHER THAN IN CONNECTION WITH A DEFINITELY RELATED GOVERNMENT PROCUREMENT OPERATION, THE UNITED STATES GOVERNMENT THEREBY INCURS NO RESPONSIBILITY NOR ANY OBLIGATION WHATSOEVER; AND THE FACT THAT THE GOVERNMENT MAY HAVE FORMULATED, FURNISHED, OR IN ANY WAY SUPPLIED THE SAID DRAWINGS, SPECIFICATIONS OR OTHER DATA IS NOT TO BE REGARDED BY IMPLICATION OR OTHERWISE AS IN ANY MANNER LICENSING THE HOLDER OR ANY OTHER PERSON OR CORPORATION, OR CONVEYING ANY RIGHTS OR PERMISSION TO MANUFACTURE, USE OR SELL ANY PATENTED INVENTION THAT MAY IN ANY WAY BE RELATED THERETO.

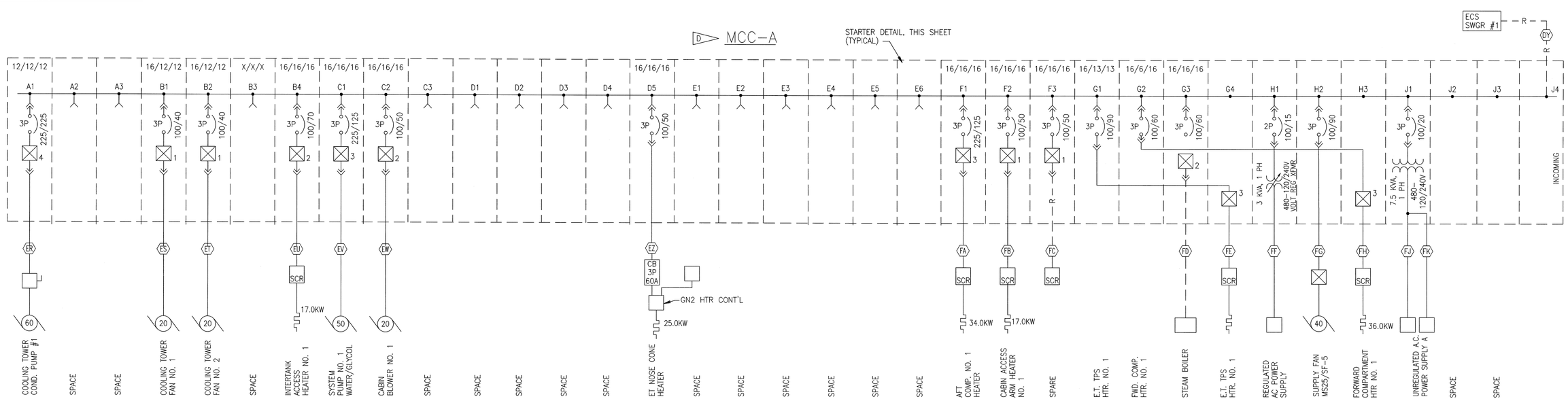

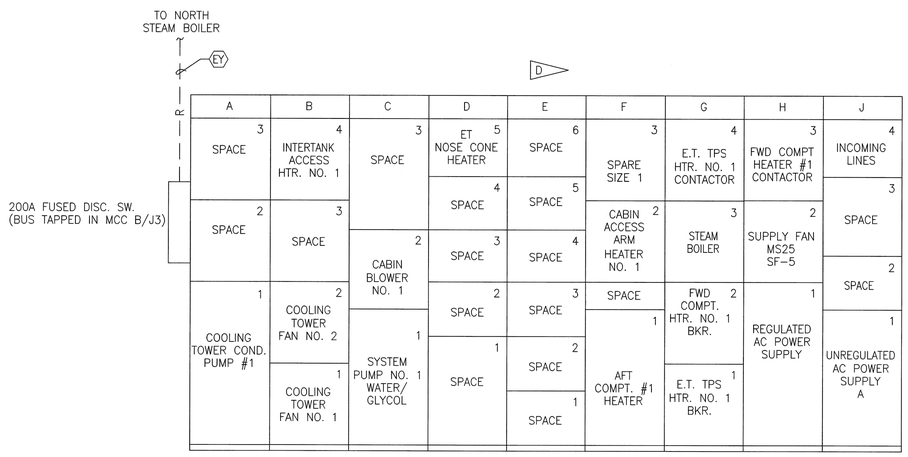

MCC–A
FRONT ELEVATION
NOT TO SCALE

SPECIFIC NOTES

A. FOR LEGEND AND GENERAL NOTES, SEE DRAWING E1.

B. PRIOR TO TRANSFER OF CONTROL & POWER WIRING, REMOVE ALL UNUSED AND ABANDONED WIRE AND CONDUITS.

C. EXISTING LOADS TO REMAIN.

D. REPLACE EQUIPMENT

E. DISCONNECT, PULL BACK AND PROTECT EXISTING POWER CONDUCTORS TO RECONNECTED TO NEW MCC A.

F. THE GOVERNMENT SHALL DISCONNECT, LABEL & SECURE ALL EXISTING CONTROL & INDICATION WIRING CONNECTING TO THE MCC. THE CONTRACTOR SHALL PROVIDE ADDITIONAL TERMINAL BLOCKS AS REQUIRED INSIDE THE TOP OF THE MCC. THE GOVERNMENT SHALL RECONNECT THE EXISTING EXTERNAL CONTROL & INDICATION WIRING TO THE TERMINAL BLOCKS. THE CONTRACTOR SHALL CONNECT MCC WIRING TO THE TERMINAL BLOCKS. PROVIDE MCC COMPARTMENT CONTROLS AS INDICATED.

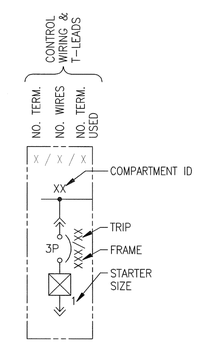

LEGEND FOR
PLUG–IN FVNR COMBINATION
STARTER MODULE

SYM.	ZONE	DESCRIPTION	DATE	APPROVED
		REVISIONS		

FRED WILSON & ASSOCIATES, INC
ENGINEERS
C. A. NO. 7188
3970 HENDRICKS AVENUE
JACKSONVILLE, FL 32207

SIGNATURES		DATE
DESIGNED	D. TRANG	05/2009
DRAWN	B. PEARCE	05/2009
CHECKED		
SUBMITTED		9/24/09
APPROVED		9/24/09
APPROVED		
APPROVED		
APPROVED		
APPROVED		
APPROVED		

NATIONAL AERONAUTICS AND SPACE ADMINISTRATION
JOHN F. KENNEDY SPACE CENTER, NASA
KENNEDY SPACE CENTER, FLORIDA

REPLACE PAD B SWITCHGEARS

ECS MCC–A
EXISTING SINGLE LINE DIAGRAM

FILE NO. | SIZE F | DWG. NO. 79K38550
PROJ. NO. 98778 | SHEET 8

E6

FILE: E6.DWG
THIS DRAWING PREPARED BY AutoCAD 2005

KSC FORM 1–11A (REV 6/91) (C/G 12/93)

NOTICE — WHEN GOVERNMENT DRAWINGS, SPECIFICATIONS, OR OTHER DATA ARE USED FOR ANY PURPOSE OTHER THAN IN CONNECTION WITH A DEFINITELY RELATED GOVERNMENT PROCUREMENT OPERATION, THE UNITED STATES GOVERNMENT THEREBY INCURS NO RESPONSIBILITY NOR ANY OBLIGATION WHATSOEVER; AND THE FACT THAT THE GOVERNMENT MAY HAVE FORMULATED, FURNISHED, OR IN ANY WAY SUPPLIED THE SAID DRAWINGS, SPECIFICATIONS OR OTHER DATA IS NOT TO BE REGARDED BY IMPLICATION OR OTHERWISE AS IN ANY MANNER LICENSING THE HOLDER OR ANY OTHER PERSON OR CORPORATION, OR CONVEYING ANY RIGHTS OR PERMISSION TO MANUFACTURE, USE OR SELL ANY PATENTED INVENTION THAT MAY IN ANY WAY BE RELATED THERETO.

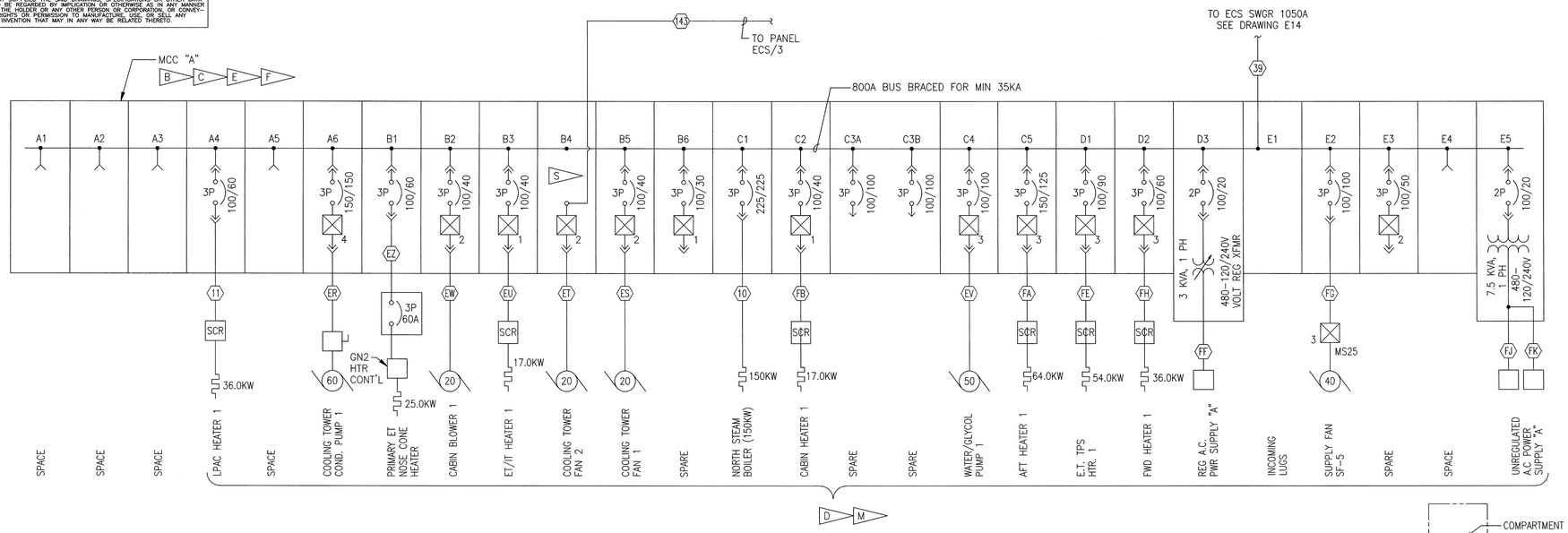

A	B	C	D	E
SPACE 1	PRIMARY ET NOSE CONE HEATER 1	NORTH STEAM BOILER 1	ET TPS HEATER 1 1	INCOMING LUGS 1
SPACE 2	CABIN BLOWER 1 2	CABIN HEATER 1 2	FWD HEATER 1 2	SUPPLY FAN SF-5 2
SPACE 3	ET/IT HEATER 1 3	3A SPARE 100A BKR; 3B SPARE 100A BKR	REG A.C. PWR SUPPLY "A" 3	SPARE SIZE 2 3
LPAC HEATER 1 4	COOLING TOWER FAN 2 4	WATER/GLYCOL PUMP 1 4		SPACE 4
SPACE 5	COOLING TOWER FAN 1 5	AFT HEATER 1 5		UNREG A.C. PWR SUPPLY "A" 5
COOLING TOWER COND PUMP 1 6	SPARE SIZE 1 6			

MODIFIED MCC A – FRONT ELEVATION
NOT TO SCALE

MCC–A

E	D	C	B	A
A	B	C	D	E

MCC–B

ECS ROOM MCC KEY PLAN
NOT TO SCALE

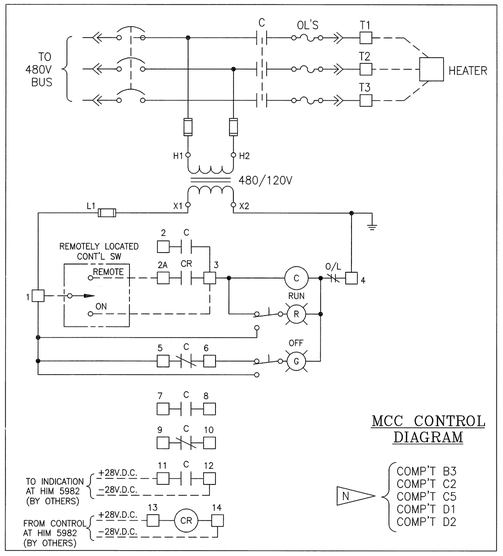

MCC CONTROL DIAGRAM

COMP'T B3
COMP'T C2
COMP'T C5
COMP'T D1
COMP'T D2

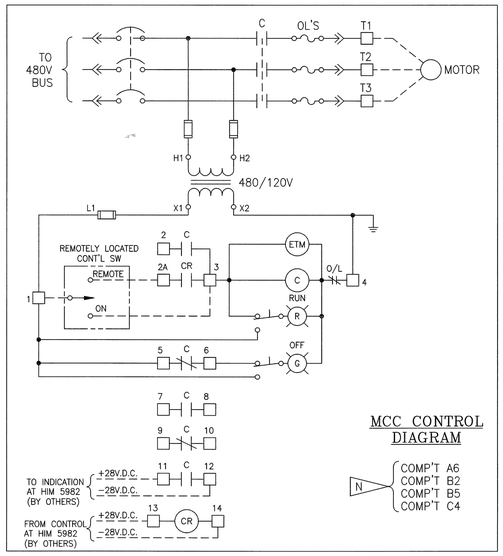

MCC CONTROL DIAGRAM

COMP'T A6
COMP'T B2
COMP'T B5
COMP'T C4

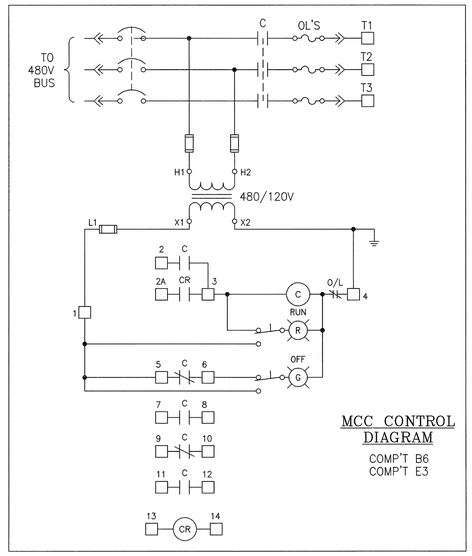

MCC CONTROL DIAGRAM

COMP'T B6
COMP'T E3

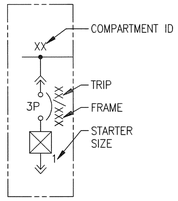

LEGEND FOR PLUG–IN FVNR COMBINATION STARTER MODULE (FEEDER BREAKER COMPARTMENTS COMPARTMENTS SIMILAR)

MCC CONTROL DIAGRAM LEGEND

- MCC COMPARTMENT TERMINAL WITH INTERNAL WIRING CONNECTIONS
- MCC COMPARTMENT TERMINAL WITH EXTERNAL WIRING CONNECTIONS
- CONTACTOR
- ELAPSED TIME METER
- 28V.D.C. CONTROL RELAY
- RED INDICATING LIGHT (PUSH TO TEST)
- GREEN INDICATING LIGHT (PUSH TO TEST)
- OL'S — OVERLOAD RELAYS
- CR — NORMALLY CLOSED AUXILIARY CONTACT
- CR — NORMALLY OPEN AUXILIARY CONTACT

SPECIFIC NOTES:

A. FOR LEGEND AND GENERAL NOTES, SEE DRAWING E1.

B. PROVIDE MCC A. EXTEND LOAD & CONTROL CONDUCTORS AS REQUIRED. (MINIMUM BUS BRACING OF MCC SHALL BE 35KAIC).

C. ALL STARTER COMPARTMENT DOORS SHALL HAVE PUSH TO TEST RED & GREEN INDICATING LIGHTS. STARTER COMPARTMENTS A6, B2, B4, B5 AND C4 SHALL HAVE AN ELAPSED TIME METER MOUNTED FLUSH WITH COMPARTMENT DOOR.

D. EXISTING EQUIPMENT.

E. ADJUST MCC COMPARTMENT NUMBERING SCHEME TO SUIT EQUIPMENT FURNISHED.

F. CONTRACTOR SHALL VERIFY LOADS PRIOR TO INSTALLING OVERLOAD HEATERS.

G. THE GOVERNMENT SHALL DISCONNECT, LABEL & SECURE ALL EXISTING CONTROL & INDICATION WIRING CONNECTING TO THE MCC. THE CONTRACTOR SHALL PROVIDE ADDITIONAL TERMINAL BLOCKS AS REQUIRED INSIDE THE TOP OF THE MCC. THE GOVERNMENT SHALL RECONNECT THE EXISTING EXTERNAL CONTROL & INDICATION WIRING TO THE TERMINAL BLOCKS. THE CONTRACTOR SHALL CONNECT MCC WIRING TO THE TERMINAL BLOCKS. PROVIDE MCC COMPARTMENT CONTROLS AS INDICATED.

H. THE CONTRACTOR SHALL PERFORM FUNCTIONALITY TESTS TO ASSURE CORRECT EQUIPMENT PERFORMANCE. THE TESTS SHALL BE WITNESSED BY THE CONTRACTING OFFICER OR HIS ASSIGNED REPRESENTATIVE.

J. ALL CONDUIT AND CABLE ENTRIES SHALL BE FROM THE TOP.

K. PROVIDE NEW CONDUIT RISERS AS NECESSARY TO ROUTE EXISTING CABLES TO EXISTING TRAYS.

L. RECONNECT EXISTING GROUND CONDUCTOR TO MCC GROUND BUS.

M. PROVIDE NEW LABELS AT LOAD. FASTEN NEW LABELS TO LOADS WITH STAINLESS STEEL SCREWS. INDICATE LOAD AND SOURCE. SEE SPECIFICATION SECTION 16003 PARAGRAPH TITLED "IDENTIFICATION PLATES".

N. INFORMATION FOR CONTROL CIRCUITS OBTAINED FROM DRAWING 79K40009, REVISION F, DATED 12/18/96.

P. EXTEND EXISTING CONDUCTORS AS REQUIRED AND PROVIDE COMPRESSION TYPE SPLICES. SPLIT BOLT TYPE SPLICES ARE NOT ACCEPTABLE.

R. NOT USED

S. REMOVE BREAKER FROM CUBICLE B4. CONNECT NEW FEED (143) FROM PANEL ECS/3 TO LINE SIDE OF STARTER. PROVIDE LAMINATED PLATE INDICATING STARTER IS FED FROM PANEL ECS/3. SEE DETAIL EH

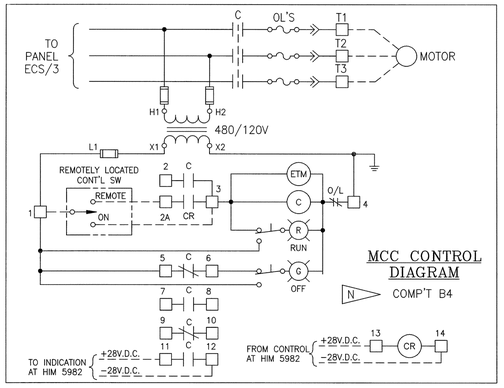

MCC CONTROL DIAGRAM

COMP'T B4

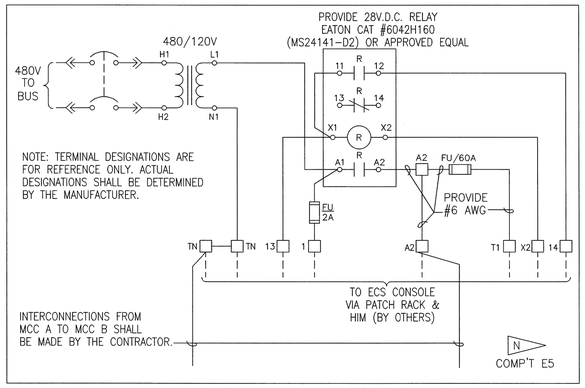

COMP'T E5

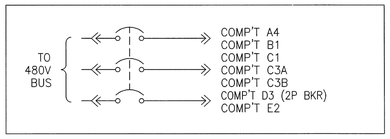

PLASTIC LAMINATE
WHITE LETTERS
RED BACKGROUND

DANGER
EXTERNAL 480V VOLTAGE SOURCE FROM PANEL ECS CIRCUIT 3 DISCONNECT POWER AT PANEL ECS

COMPARTMENT B4 PLATE DETAIL EH
NOT TO SCALE

SYM.	ZONE	DESCRIPTION	DATE	APPROVED
		REVISIONS		

FRED WILSON & ASSOCIATES, INC ENGINEERS
C. A. NO. 7188
3970 HENDRICKS AVENUE
JACKSONVILLE, FL 32207

SIGNATURES		DATE
DESIGNED	D. TRANG	05/2009
DRAWN	B. PEARCE	05/2009
CHECKED		
SUBMITTED		9/25/09
APPROVED		9/25/09
APPROVED		
APPROVED		
APPROVED		
APPROVED		
APPROVED		

NATIONAL AERONAUTICS AND SPACE ADMINISTRATION
JOHN F. KENNEDY SPACE CENTER, NASA
KENNEDY SPACE CENTER, FLORIDA

REPLACE PAD B SWITCHGEARS

ECS MCC–A
MODIFIED SINGLE LINE DIAGRAM AND MISCELLANEOUS DETAILS

FILE NO. | SIZE F | DWG. NO. 79K38550
PROJ. NO. 98778 | SHEET 9

E7

FILE: E7.DWG

THIS DRAWING PREPARED BY AutoCAD 2005

KSC FORM 1-11A (REV 6/91) (C/G 12/93)

NOTICE – WHEN GOVERNMENT DRAWINGS, SPECIFICATIONS, OR OTHER DATA ARE USED FOR ANY PURPOSE OTHER THAN IN CONNECTION WITH A DEFINITELY RELATED GOVERNMENT PROCUREMENT OPERATION, THE UNITED STATES GOVERNMENT THEREBY INCURS NO RESPONSIBILITY NOR ANY OBLIGATION WHATSOEVER; AND THE FACT THAT THE GOVERNMENT MAY HAVE FORMULATED, FURNISHED, OR IN ANY WAY SUPPLIED THE SAID DRAWINGS, SPECIFICATIONS, OR OTHER DATA IS NOT TO BE REGARDED BY IMPLICATION OR OTHERWISE AS IN ANY MANNER LICENSING THE HOLDER OR ANY OTHER PERSON OR CORPORATION, OR CONVEYING ANY RIGHTS OR PERMISSION TO MANUFACTURE, USE, OR SELL ANY PATENTED INVENTION THAT MAY IN ANY WAY BE RELATED THERETO.

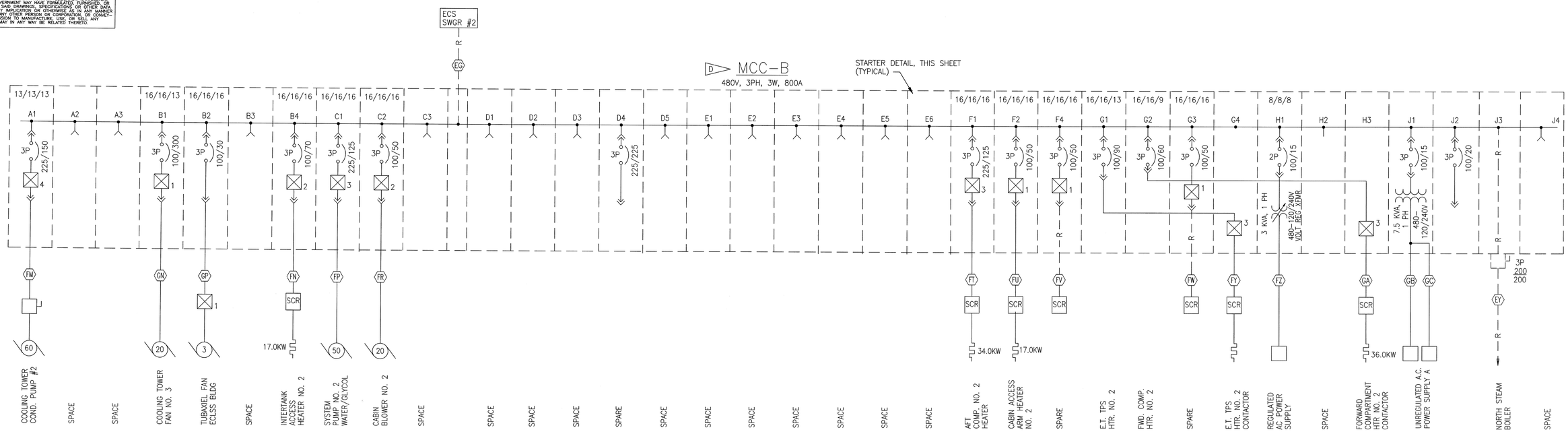

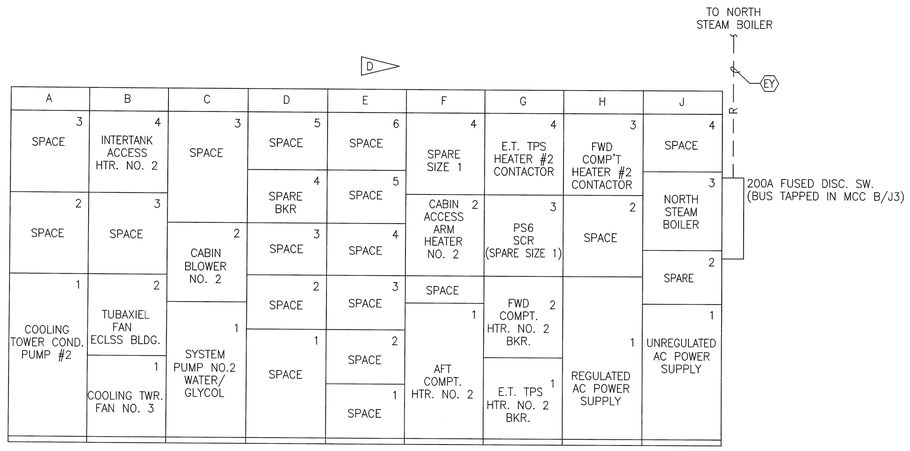

MCC–B FRONT ELEVATION

NOT TO SCALE

SPECIFIC NOTES

A. FOR LEGEND AND GENERAL NOTES, SEE DRAWING E1.

B. PRIOR TO TRANSFER OF CONTROL & POWER WIRING, REMOVE ALL UNUSED AND ABANDONED WIRE AND CONDUITS.

C. EXISTING LOADS TO REMAIN.

D. REPLACE EQUIPMENT

E. DISCONNECT, PULL BACK AND PROTECT EXISTING POWER CONDUCTORS TO RECONNECTED TO NEW MCC B.

F. THE GOVERNMENT SHALL DISCONNECT, LABEL & SECURE ALL EXISTING CONTROL & INDICATION WIRING CONNECTING TO THE MCC. THE CONTRACTOR SHALL PROVIDE ADDITIONAL TERMINAL BLOCKS AS REQUIRED INSIDE THE TOP OF THE MCC. THE GOVERNMENT SHALL RECONNECT THE EXISTING EXTERNAL CONTROL & INDICATION WIRING TO THE TERMINAL BLOCKS. THE CONTRACTOR SHALL CONNECT MCC WIRING TO THE TERMINAL BLOCKS. PROVIDE MCC COMPARTMENT CONTROLS AS INDICATED.

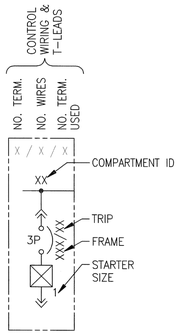

LEGEND FOR PLUG–IN FVNR COMBINATION STARTER MODULE

SYM.	ZONE	DESCRIPTION	DATE	APPROVED
		REVISIONS		

FRED WILSON & ASSOCIATES, INC
ENGINEERS
C. A. NO. 7188
FW&A
3970 HENDRICKS AVENUE
JACKSONVILLE, FL 32207

SIGNATURES		DATE
DESIGNED	D. TRANG	05/2009
DRAWN	B. PEARCE	05/2009
CHECKED		
SUBMITTED		9/3/09
APPROVED		9/30/09
APPROVED		
APPROVED		
APPROVED		
APPROVED		
APPROVED		

NATIONAL AERONAUTICS AND SPACE ADMINISTRATION
JOHN F. KENNEDY SPACE CENTER, NASA
KENNEDY SPACE CENTER, FLORIDA

REPLACE PAD B SWITCHGEARS

ECS MCC–B
EXISTING SINGLE LINE DIAGRAM

FILE NO. | SIZE F | DWG. NO. 79K38550
PROJ. NO. 98778 | SHEET 10

E8

FILE: E8.DWG

THIS DRAWING PREPARED BY AutoCAD 2005

KSC FORM 1–11A (REV 6/91) (C/G 12/93)

NOTICE – WHEN GOVERNMENT DRAWINGS, SPECIFICATIONS, OR OTHER DATA ARE USED FOR ANY PURPOSE OTHER THAN IN CONNECTION WITH A DEFINITELY RELATED GOVERNMENT PROCUREMENT OPERATION, THE UNITED STATES GOVERNMENT THEREBY INCURS NO RESPONSIBILITY NOR ANY OBLIGATION WHATSOEVER; AND THE FACT THAT THE GOVERNMENT MAY HAVE FORMULATED, FURNISHED, OR IN ANY WAY SUPPLIED THE SAID DRAWINGS, SPECIFICATIONS OR OTHER DATA IS NOT TO BE REGARDED BY IMPLICATION OR OTHERWISE AS IN ANY MANNER LICENSING THE HOLDER OR ANY OTHER PERSON OR CORPORATION, OR CONVEYING ANY RIGHTS OR PERMISSION TO MANUFACTURE, USE OR SELL ANY PATENTED INVENTION THAT MAY IN ANY WAY BE RELATED THEREIRO.

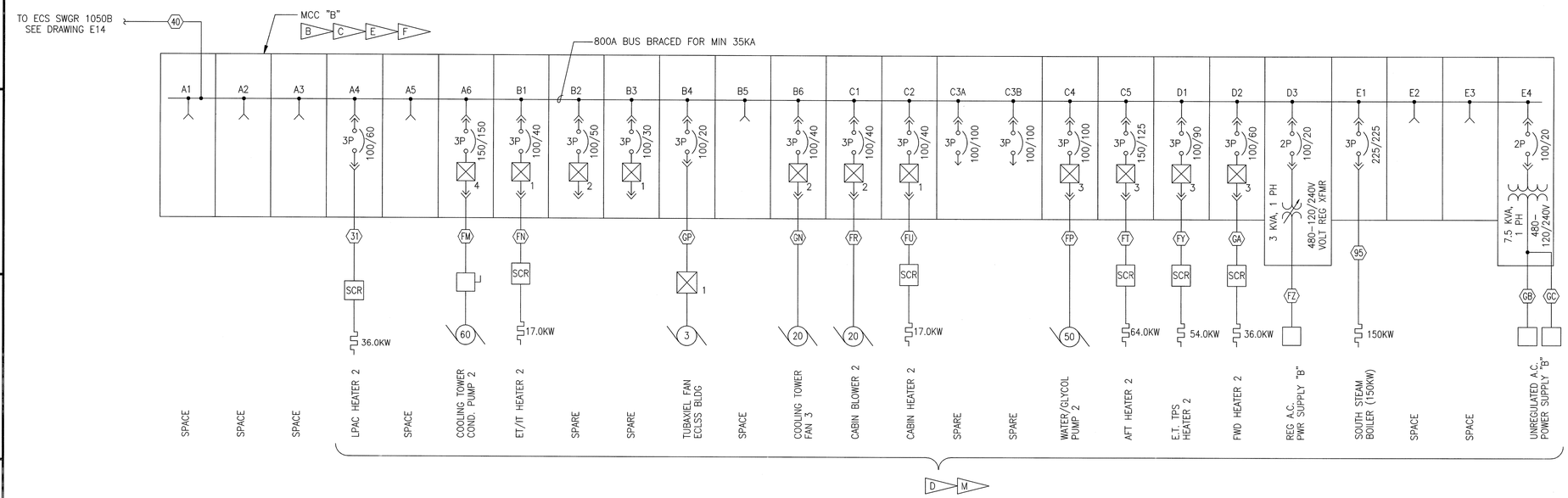

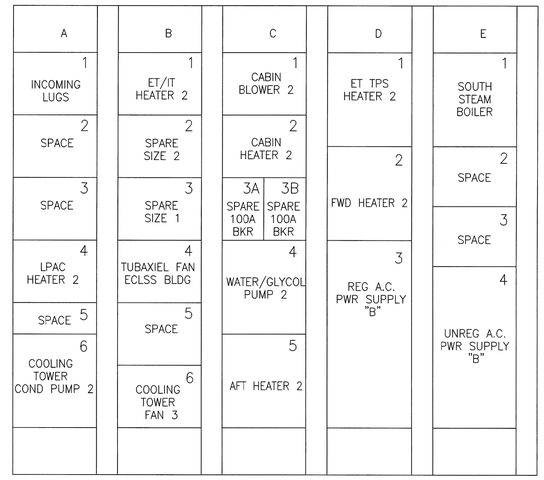

MODIFIED MCC B – FRONT ELEVATION
NOT TO SCALE

MCC–A

E	D	C	B	A
A	B	C	D	E

MCC–B

ECS ROOM
MCC KEY PLAN
NOT TO SCALE

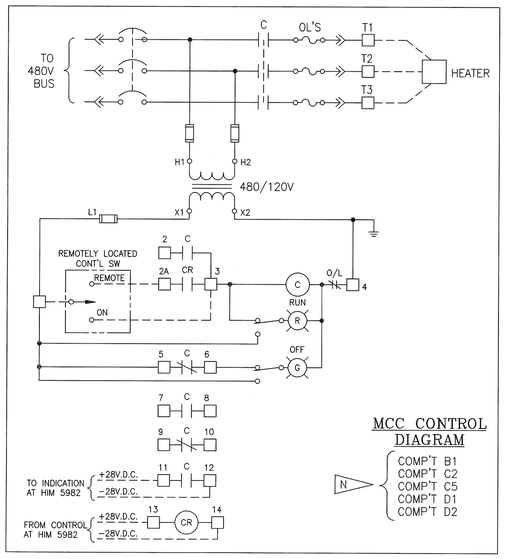

MCC CONTROL DIAGRAM

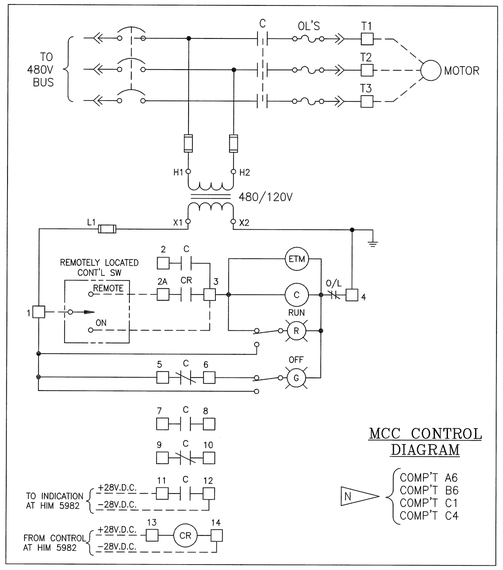

MCC CONTROL DIAGRAM

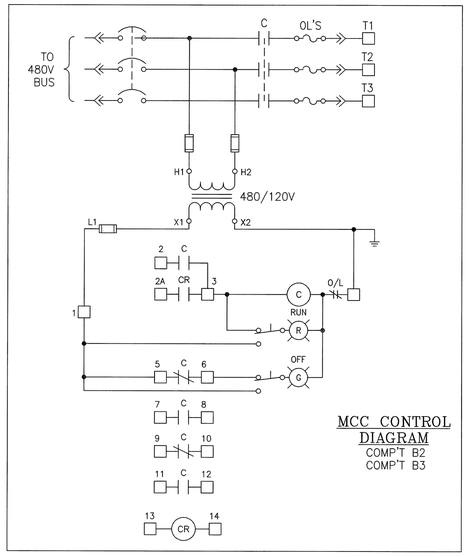

MCC CONTROL DIAGRAM
COMP'T B2
COMP'T B3

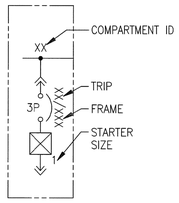

LEGEND FOR
PLUG–IN FVNR COMBINATION
STARTER MODULE
(FEEDER BREAKER COMPARTMENTS
COMPARTMENTS SIMILAR)

MCC CONTROL DIAGRAM LEGEND

- MCC COMPARTMENT TERMINAL WITH INTERNAL WIRING CONNECTIONS
- MCC COMPARTMENT TERMINAL WITH EXTERNAL WIRING CONNECTIONS
- C — CONTACTOR
- ETM — ELAPSED TIME METER
- CR — 28V.D.C. CONTROL RELAY
- R — RED INDICATING LIGHT (PUSH TO TEST)
- G — GREEN INDICATING LIGHT (PUSH TO TEST)
- OL'S — OVERLOAD RELAYS
- CR — NORMALLY CLOSED AUXILIARY CONTACT
- CR — NORMALLY OPEN AUXILIARY CONTACT

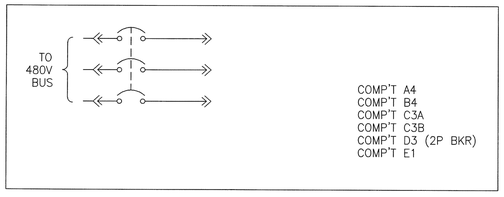

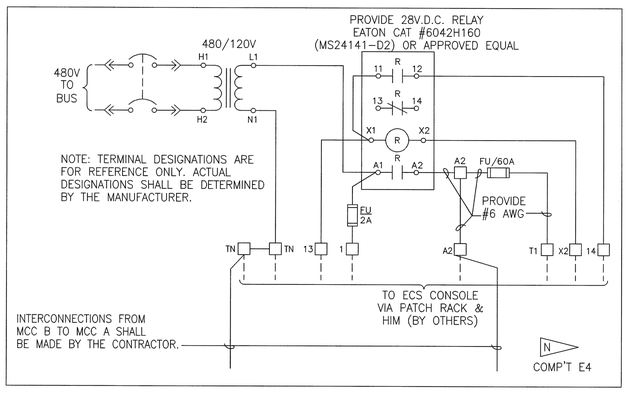

SPECIFIC NOTES:

A. FOR LEGEND AND GENERAL NOTES, SEE DRAWING E1.

B. PROVIDE MCC B. EXTEND LOAD & CONTROL CONDUCTORS AS REQUIRED. (MINIMUM BUS BRACING OF MCC SHALL BE 35KAIC).

C. ALL STARTER COMPARTMENT DOORS SHALL HAVE PUSH TO TEST RED & GREEN INDICATING LIGHTS. STARTER COMPARTMENTS A6, B6, C1 AND C4 SHALL HAVE AN ELAPSED TIME METER MOUNTED FLUSH WITH COMPARTMENT DOOR.

D. EXISTING EQUIPMENT.

E. ADJUST MCC COMPARTMENT NUMBERING SCHEME TO SUIT EQUIPMENT FURNISHED.

F. CONTRACTOR SHALL VERIFY LOADS PRIOR TO INSTALLING OVERLOAD HEATERS.

G. THE GOVERNMENT SHALL DISCONNECT, LABEL & SECURE ALL EXISTING CONTROL & INDICATION WIRING CONNECTING TO THE MCC. THE CONTRACTOR SHALL PROVIDE ADDITIONAL TERMINAL BLOCKS AS REQUIRED INSIDE THE TOP OF THE MCC. THE GOVERNMENT SHALL RECONNECT THE EXISTING EXTERNAL CONTROL & INDICATION WIRING TO THE TERMINAL BLOCKS. THE CONTRACTOR SHALL CONNECT MCC WIRING TO THE TERMINAL BLOCKS. PROVIDE MCC COMPARTMENT CONTROLS AS INDICATED.

H. THE CONTRACTOR SHALL PERFORM FUNCTIONALITY TESTS TO ASSURE CORRECT EQUIPMENT PERFORMANCE. THE TESTS SHALL BE WITNESSED BY THE CONTRACTING OFFICER OR HIS ASSIGNED REPRESENTATIVE.

J. ALL CONDUIT AND CABLE ENTRIES SHALL BE FROM THE TOP.

K. PROVIDE NEW CONDUIT RISERS AS NECESSARY TO ROUTE EXISTING CABLES TO EXISTING TRAYS.

L. RECONNECT EXISTING GROUND CONDUCTOR TO MCC GROUND BUS.

M. PROVIDE NEW LABELS AT LOAD. FASTEN NEW LABELS TO LOADS WITH STAINLESS STEEL SCREWS. INDICATE LOAD AND SOURCE. SEE SPECIFICATION SECTION 16003 PARAGRAPH TITLED "IDENTIFICATION PLATES".

N. INFORMATION FOR CONTROL CIRCUITS OBTAINED FROM DRAWING 79K40009, REVISION F, DATED 12/18/96.

P. NOT USED

SYM.	ZONE	DESCRIPTION	DATE	APPROVED
		REVISIONS		

FRED WILSON & ASSOCIATES, INC
ENGINEERS
C. A. NO. 7188
FW&A
3970 HENDRICKS AVENUE
JACKSONVILLE, FL 32207

SIGNATURES		DATE
DESIGNED	D. TRANG	05/2009
DRAWN	B. PEARCE	05/2009
CHECKED		
SUBMITTED		9/2/09
APPROVED		9/2/09
APPROVED		
APPROVED		
APPROVED		
APPROVED		
APPROVED		

NATIONAL AERONAUTICS AND SPACE ADMINISTRATION
JOHN F. KENNEDY SPACE CENTER, NASA
KENNEDY SPACE CENTER, FLORIDA

REPLACE PAD B SWITCHGEARS

ECS MCC–B
MODIFIED SINGLE LINE DIAGRAM
AND MISCELLANEOUS DETAILS

FILE NO. | SIZE F | DWG. NO. 79K38550
PROJ. NO. 98778 | SHEET 11

E9

FILE: E9.DWG THIS DRAWING PREPARED BY AutoCAD 2005

KSC FORM 1–11A (REV 6/91) (C/G 12/93)

NOTICE - WHEN GOVERNMENT DRAWINGS, SPECIFICATIONS, OR OTHER DATA NOT USED FOR ANY PURPOSE OTHER THAN IN CONNECTION WITH A DEFINITELY RELATED GOVERNMENT PROCUREMENT OPERATION, THE UNITED STATES GOVERNMENT THEREBY INCURS NO RESPONSIBILITY NOR ANY OBLIGATION WHATSOEVER; AND THE FACT THAT THE GOVERNMENT MAY HAVE FORMULATED, FURNISHED, OR IN ANY WAY SUPPLIED THE SAID DRAWINGS, SPECIFICATIONS, OR OTHER DATA, IS NOT TO BE REGARDED BY IMPLICATION OR OTHERWISE AS IN ANY MANNER LICENSING THE HOLDER OR ANY OTHER PERSON OR CORPORATION, OR CONVEYING ANY RIGHTS OR PERMISSION TO MANUFACTURE, USE OR SELL ANY PATENTED INVENTION THAT MAY IN ANY WAY BE RELATED THERETO.

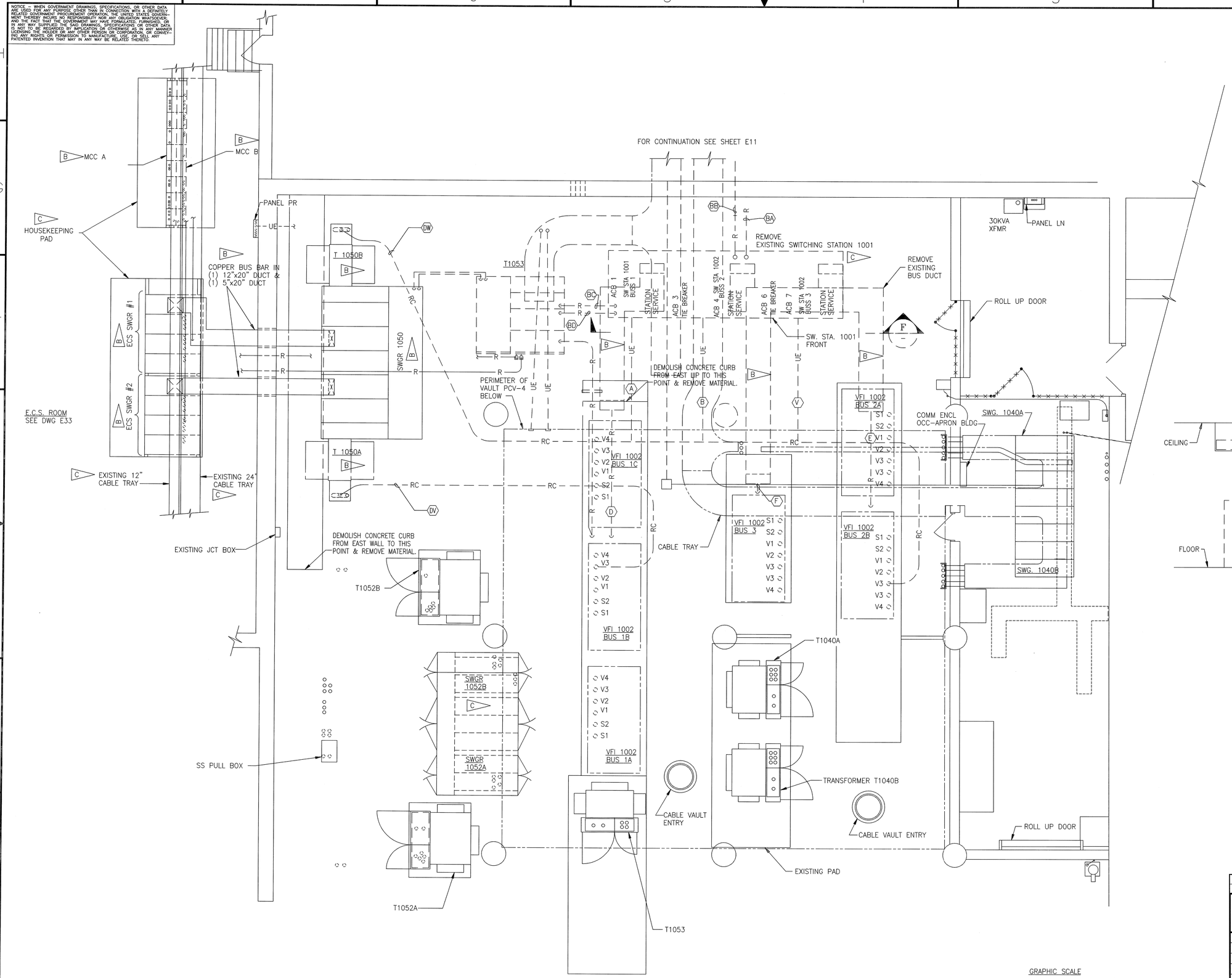

EXISTING PLAN PTCR APRON

SCALE: 1/4"=1'-0"

GRAPHIC SCALE

1/4"= 1'- 0" 4' 0' 4' 8' 12'

SPECIFIC NOTES:

A. FOR LEGEND AND GENERAL NOTES, SEE DRAWING E1.

B. REMOVE EQUIPMENT.

C. EQUIPMENT TO REMAIN

D. REMOVE EXISTING CONDUIT TO VAULT.

E. SEE DRAWING E19 FOR CABLE SCHEDULE.

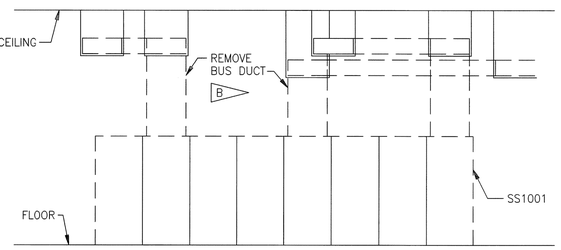

SECTION F

SCALE: 1/4" = 1'-0"

SYM.	ZONE	DESCRIPTION	DATE	APPROVED
		REVISIONS		

FRED WILSON & ASSOCIATES, INC ENGINEERS
FW&A
C. A. NO. 7188
3970 HENDRICKS AVENUE
JACKSONVILLE, FL 32207

SIGNATURES		DATE
DESIGNED	D. TRANG	05/2009
DRAWN	B. PEARCE	05/2009
CHECKED		
SUBMITTED		9/29/09
APPROVED		9/29/09
APPROVED		
APPROVED		
APPROVED		
APPROVED		
APPROVED		

NATIONAL AERONAUTICS AND SPACE ADMINISTRATION
JOHN F. KENNEDY SPACE CENTER, NASA
KENNEDY SPACE CENTER, FLORIDA

REPLACE PAD B SWITCHGEARS

PTCR APRON BUILDING
EXISTING ELECTRICAL PLAN

E10

FILE NO. | SIZE F | DWG. NO. 79K38550

PROJ. NO. 98778 | SHEET 12

FILE: E10.DWG

THIS DRAWING PREPARED BY AutoCAD 2005

KSC FORM 1-11A (REV 6/91) (C/G 12/93)

NOTICE – WHEN GOVERNMENT DRAWINGS, SPECIFICATIONS, OR OTHER DATA ARE USED FOR ANY PURPOSE OTHER THAN IN CONNECTION WITH A DEFINITELY RELATED GOVERNMENT PROCUREMENT OPERATION, THE UNITED STATES GOVERNMENT THEREBY INCURS NO RESPONSIBILITY NOR ANY OBLIGATION WHATSOEVER; AND THE FACT THAT THE GOVERNMENT MAY HAVE FORMULATED, FURNISHED, OR IN ANY WAY SUPPLIED THE SAID DRAWINGS, SPECIFICATIONS, OR OTHER DATA IS NOT TO BE REGARDED BY IMPLICATION OR OTHERWISE AS IN ANY MANNER LICENSING THE HOLDER OR ANY OTHER PERSON OR CORPORATION, OR CONVEYING ANY RIGHTS OR PERMISSION TO MANUFACTURE, USE OR SELL ANY PATENTED INVENTION THAT MAY IN ANY WAY BE RELATED THERETO.

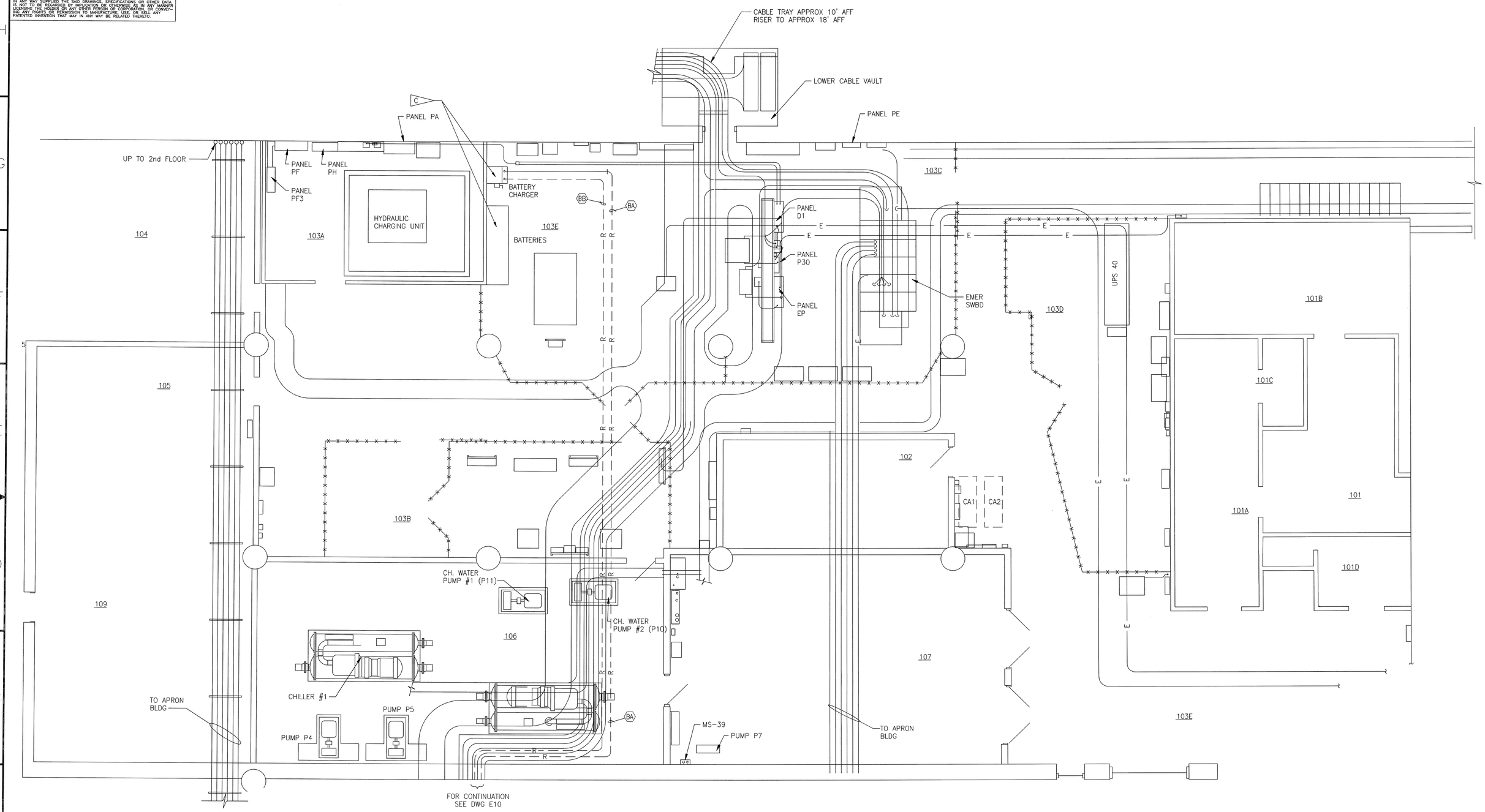

EXISTING PTCR FIRST FLOOR PLAN
SCALE: 1/4"=1'-0"

N

SPECIFIC NOTES:

A. FOR GENERAL NOTES AND LEGEND, SEE DRAWING V2.

B. SEE DRAWING E19 FOR CABLE SCHEDULE.

C. REMOVE EXISTING EQUIPMENT, TURNOVER THE BATTERIES, BACKUP BATTERY AND BATTERY CHARGER TO THE GOVERNMENT

GRAPHIC SCALE

1/4"= 1'- 0" 4' 0' 4' 8' 12'

FILE: E11.DWG

THIS DRAWING PREPARED BY AutoCAD 2005

E11

SYM.	ZONE	DESCRIPTION	DATE	APPROVED
		REVISIONS		

FRED WILSON & ASSOCIATES, INC
ENGINEERS
C. A. NO. 7188
FW&A
3970 HENDRICKS AVENUE
JACKSONVILLE, FL 32207

SIGNATURES	DATE
DESIGNED D. TRANG	05/2009
DRAWN B. PEARCE	05/2009
CHECKED	
SUBMITTED	9/24/09
APPROVED	9/24/09
APPROVED	
APPROVED	
APPROVED	
APPROVED	
APPROVED	

NATIONAL AERONAUTICS AND SPACE ADMINISTRATION
JOHN F. KENNEDY SPACE CENTER, NASA
KENNEDY SPACE CENTER, FLORIDA

REPLACE PAD B SWITCHGEARS

PTCR BUILDING EXISTING PLAN
PAD B

FILE NO.	SIZE	DWG. NO.
	F	79K38550
PROJ. NO. 98778		SHEET 13

KSC FORM 1-11A (REV 6/91) (C/G 12/93)

NOTICE – WHEN GOVERNMENT DRAWINGS, SPECIFICATIONS, OR OTHER DATA ARE USED FOR ANY PURPOSE OTHER THAN IN CONNECTION WITH A DEFINITELY RELATED GOVERNMENT PROCUREMENT OPERATION, THE UNITED STATES GOVERNMENT THEREBY INCURS NO RESPONSIBILITY NOR ANY OBLIGATION WHATSOEVER; AND THE FACT THAT THE GOVERNMENT MAY HAVE FORMULATED, FURNISHED, OR IN ANY WAY SUPPLIED THE SAID DRAWINGS, SPECIFICATIONS, OR OTHER DATA, IS NOT TO BE REGARDED BY IMPLICATION OR OTHERWISE AS IN ANY MANNER LICENSING THE HOLDER OR ANY OTHER PERSON OR CORPORATION, OR CONVEYING ANY RIGHTS OR PERMISSION TO MANUFACTURE, USE, OR SELL ANY PATENTED INVENTION THAT MAY IN ANY WAY BE RELATED THERETO.

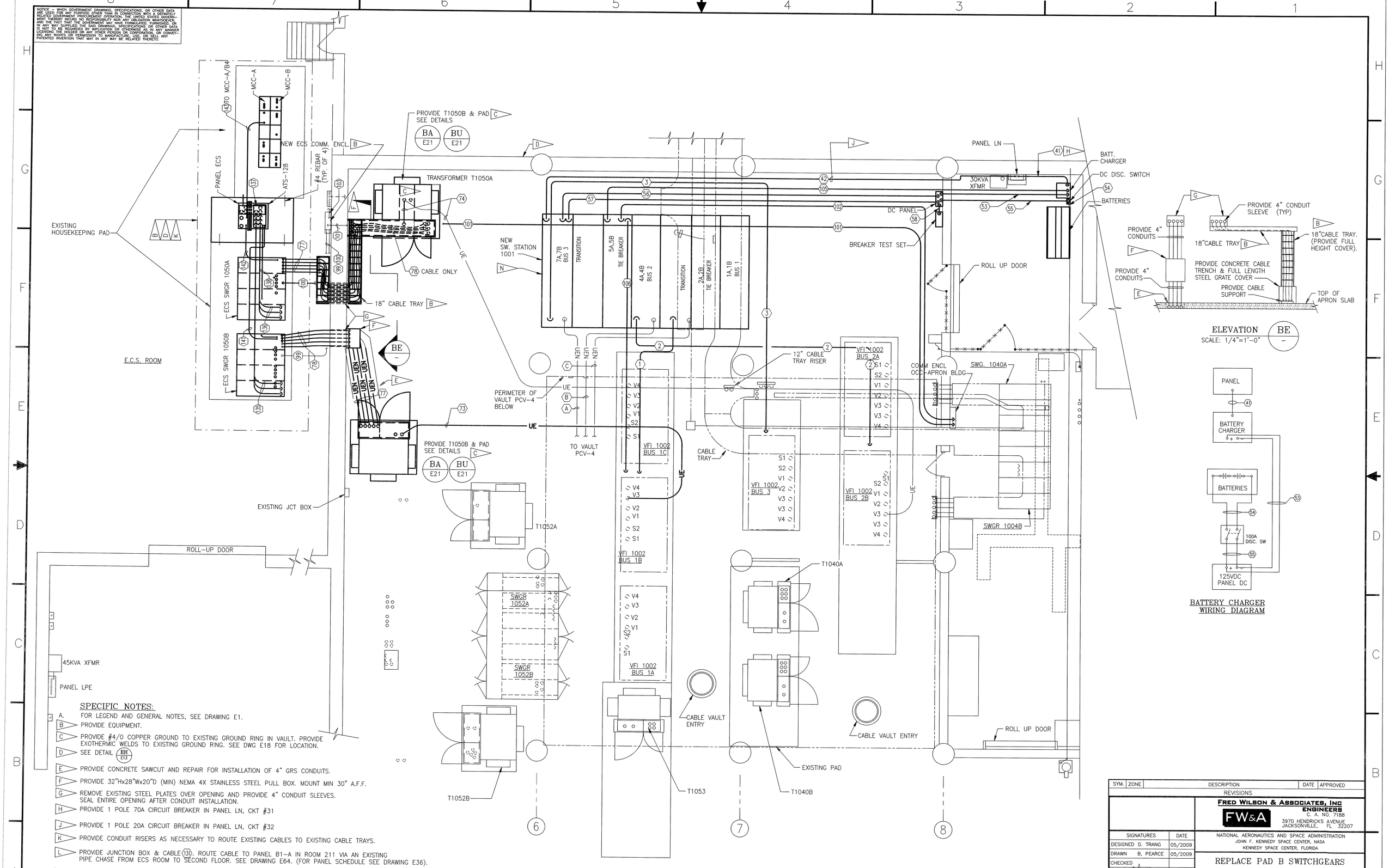

SPECIFIC NOTES:

A. FOR LEGEND AND GENERAL NOTES, SEE DRAWING E1.

B. PROVIDE EQUIPMENT.

C. PROVIDE #4/0 COPPER GROUND TO EXISTING GROUND RING IN VAULT. PROVIDE EXOTHERMIC WELDS TO EXISTING GROUND RING. SEE DWG E18 FOR LOCATION.

D. SEE DETAIL EH/E13

E. PROVIDE CONCRETE SAWCUT AND REPAIR FOR INSTALLATION OF 4" GRS CONDUITS.

F. PROVIDE 32"Hx28"Wx20"D (MIN) NEMA 4X STAINLESS STEEL PULL BOX. MOUNT MIN 30" A.F.F.

G. REMOVE EXISTING STEEL PLATES OVER OPENING AND PROVIDE 4" CONDUIT SLEEVES. SEAL ENTIRE OPENING AFTER CONDUIT INSTALLATION.

H. PROVIDE 1 POLE 70A CIRCUIT BREAKER IN PANEL LN, CKT #31

J. PROVIDE 1 POLE 20A CIRCUIT BREAKER IN PANEL LN, CKT #32

K. PROVIDE CONDUIT RISERS AS NECESSARY TO ROUTE EXISTING CABLES TO EXISTING CABLE TRAYS.

L. PROVIDE JUNCTION BOX & CABLE (131). ROUTE CABLE TO PANEL B1-A IN ROOM 211 VIA AN EXISTING PIPE CHASE FROM ECS ROOM TO SECOND FLOOR. SEE DRAWING E64. (FOR PANEL SCHEDULE SEE DRAWING E36).

M. PROVIDE STRUT TYPE CONDUIT RACK HUNG FROM CEILING OF PTCR, SUPPORTED WITH 5/8" THREADED ROD AND LEAD ANCHORS EXPOXIED INTO CEILING.

N. NEMA 3R WALK-IN ENCLOSURE.

MODIFIED PLAN PTCR APRON
SCALE: 1/4"=1'-0"

SYM.	ZONE	DESCRIPTION	DATE	APPROVED
		REVISIONS		

FRED WILSON & ASSOCIATES, INC ENGINEERS
FW&A
C. A. NO. 7188
3970 HENDRICKS AVENUE
JACKSONVILLE, FL 32207

SIGNATURES	DATE
DESIGNED D. TRANG	05/2009
DRAWN B. PEARCE	05/2009
CHECKED	
SUBMITTED	9/24/09
APPROVED	9/24/09
APPROVED	
APPROVED	
APPROVED	
APPROVED	
APPROVED	

NATIONAL AERONAUTICS AND SPACE ADMINISTRATION
JOHN F. KENNEDY SPACE CENTER, NASA
KENNEDY SPACE CENTER, FLORIDA

REPLACE PAD B SWITCHGEARS

PTCR APRON BUILDING
MODIFIED ELECTRICAL PLAN

FILE NO. | SIZE F | DWG. NO. 79K38550
PROJ. NO. 98778 | SHEET 14

E12

FILE: E12.DWG

THIS DRAWING PREPARED BY AutoCAD 2005

KSC FORM 1-11A (REV 6/91) (C/G 12/93)

NOTICE -- WHEN GOVERNMENT DRAWINGS, SPECIFICATIONS, OR OTHER DATA ARE USED FOR ANY PURPOSE OTHER THAN IN CONNECTION WITH A DEFINITELY RELATED GOVERNMENT PROCUREMENT OPERATION, THE UNITED STATES GOVERNMENT THEREBY INCURS NO RESPONSIBILITY NOR ANY OBLIGATION WHATSOEVER; AND THE FACT THAT THE GOVERNMENT MAY HAVE FORMULATED, FURNISHED, OR IN ANY WAY SUPPLIED THE SAID DRAWINGS, SPECIFICATIONS, OR OTHER DATA IS NOT TO BE REGARDED BY IMPLICATION OR OTHERWISE AS IN ANY MANNER LICENSING THE HOLDER OR ANY OTHER PERSON OR CORPORATION, OR CONVEYING ANY RIGHTS OR PERMISSION TO MANUFACTURE, USE, OR SELL ANY PATENTED INVENTION THAT MAY IN ANY WAY BE RELATED THERETO.

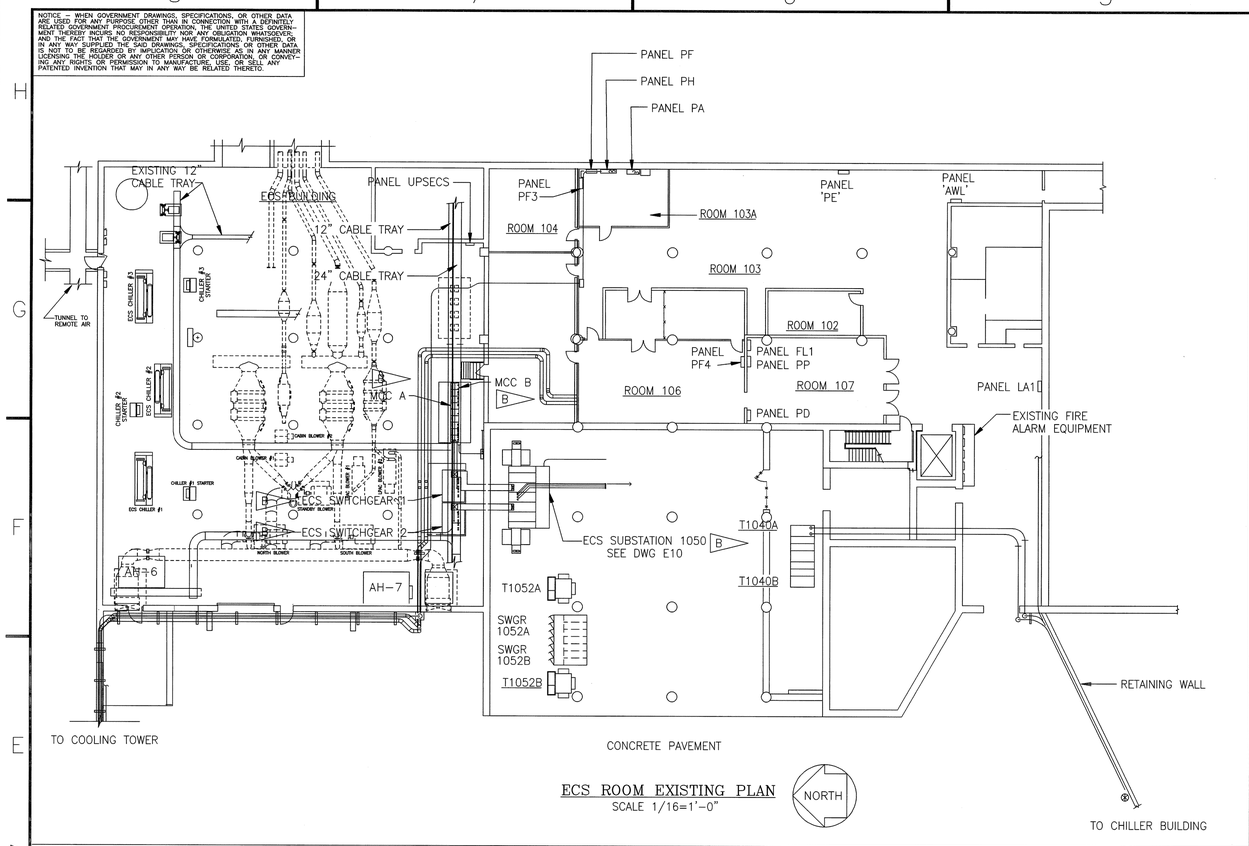

ECS ROOM EXISTING PLAN
SCALE 1/16=1'-0"

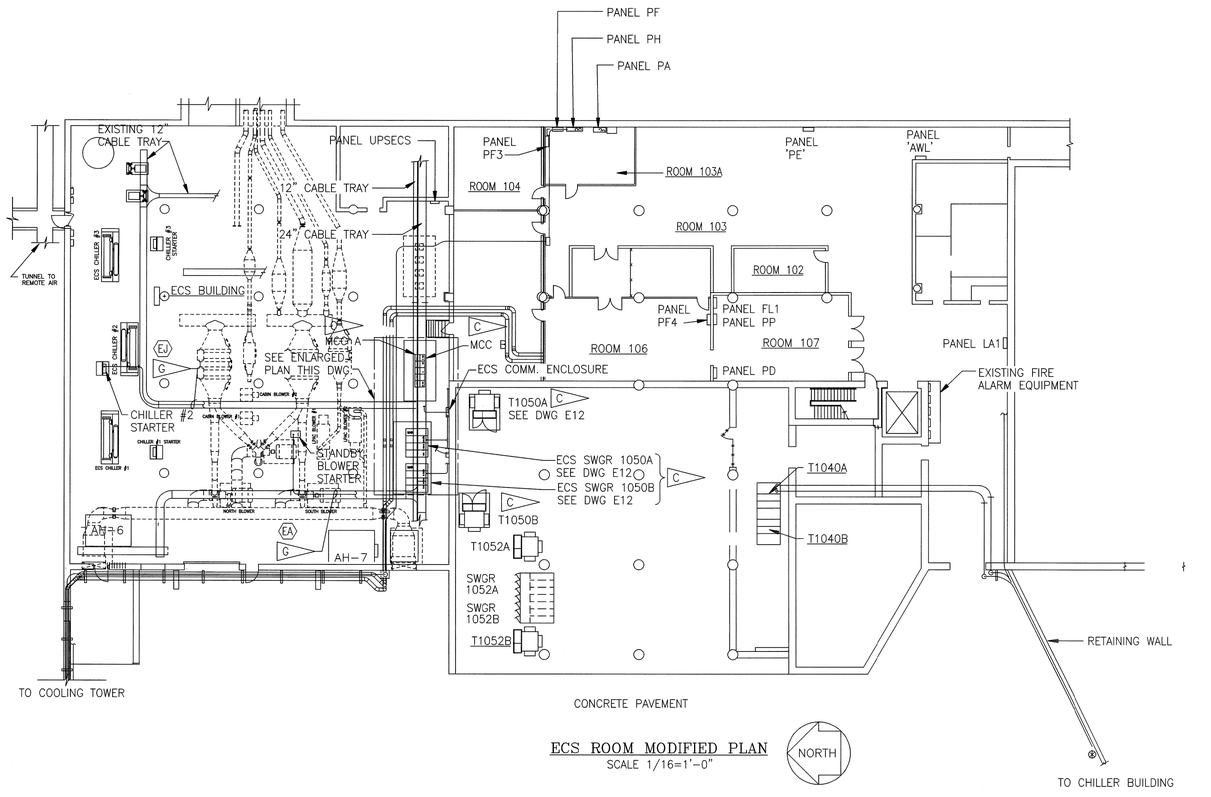

ECS ROOM MODIFIED PLAN
SCALE 1/16=1'-0"

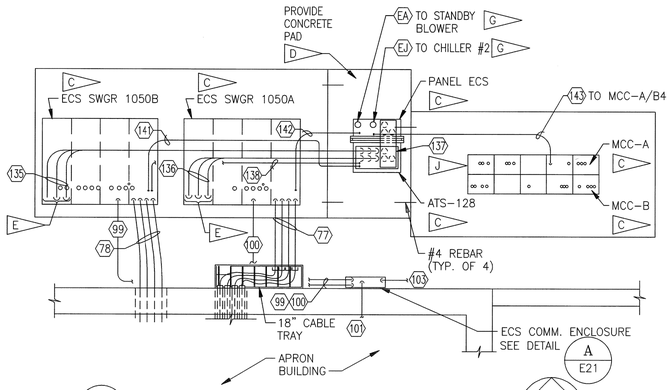

EH E12 ECS SWITCHGEAR & MCC'S – ENLARGED PLAN
SCALE 1/4=1'-0"

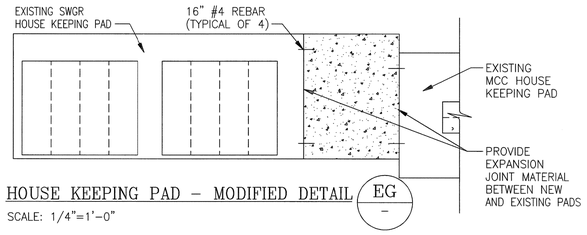

HOUSE KEEPING PAD – MODIFIED DETAIL EG –
SCALE: 1/4"=1'-0"

VOLT : 480/277
3 PHASE 4 WIRE
1200 AMPS ☐ MAIN BKR ☒ M.L.O
☒ SURFACE ☐ FLUSH

PANEL ECS

FEEDER SIZE : 137
AIC RATING : 65K AIC
LOCATION : ECS ROOM
FED FROM : ECS SWGR 1050A/1050B VIA ATS-128

NO.	POLE	TRIP	WIRE	GND	CND	PNL/CKT	SERVES	SERVES	PNL/CKT	CND	GND	WIRE	TRIP	POLE	NO.
3	3	40	143 →			–	COOLING TWR #2 FAN STARTER	SPACE	–	–	–	–	–	–	4
9	3	–	–	–	–	–	SPACE	SPACE	–	–	–	–	–	–	10
15	3	–	–	–	–	–	SPACE	SPACE	–	–	–	–	–	–	16
21	3	–	–	–	–	–	SPACE	SPACE	–	–	–	–	–	–	22
27	3	800	EA →			–	STAND BY BLOWER	SPACE	–	–	–	–	–	–	28
33	3	500	EJ →			–	CHILLER #2	SPACE	–	–	–	–	–	–	34

GRAPHIC SCALES

1/16" = 1'-0" 16' 0' 16' 32' 48'

1/4" = 1'-0" 4' 0' 4' 8' 12'

SPECIFIC NOTES:

A. FOR LEGEND AND GENERAL NOTES, SEE DRAWING E1.

B REMOVE EQUIPMENT

C PROVIDE EQUIPMENT

D PROVIDE 6'x8' CONCRETE PAD AS INDICATED. SECURE NEW PAD TO EXISTING SWGR AND MCC PADS. DRILL A 4" DEEP HOLE IN EXISTING HOUSEKEEPING PADS 12" FROM EACH CORNER. EPOXY A #4, 16" LONG REBAR INTO EACH HOLE. USE CONCRETE BONDING AGENT TO BOND NEW CONCRETE PAD TO EXISTING CONCRETE. CHAMFER EDGES TO MATCH EXISTING PADS. PROVIDE EXPANSION JOINT MATERIAL BETWEEN NEW AND EXISTING PADS. SEE DETAIL EG –

E PROVIDE LB TYPE FITTINGS AND COVERS. (TYP. OF 6)

F NOT USED

G ROUTE EXISTING CONDUCTORS TO NEW PANEL ECS. PROVIDE NEW BUSHED 4" C. NIPPLES UP TO EXISTING CABLE TRAY.

H PROVIDE STRUT TYPE SUPPORT RACK FOR PANEL ECS AND ATS-128.

J PROVIDE NEMA 1, 12"x12", (LENGTH AS REQUIRED), WIREWAY BETWEEN ATS-128 AND PANEL ECS. ORIENT WIREWAY SO TOP IS REMOVABLE. PROVIDE 4" BUSHED CHASE NIPPLES AND LOCKNUTS BETWEEN EQUIPMENT ENCLOSURES AND WIREWAY.

SYM.	ZONE	DESCRIPTION	DATE	APPROVED

REVISIONS

FRED WILSON & ASSOCIATES, INC
ENGINEERS
C. A. NO. 7188
FW&A
3970 HENDRICKS AVENUE
JACKSONVILLE, FL 32207

SIGNATURES	DATE
DESIGNED D. TRANG	05/2009
DRAWN B. PEARCE	05/2009
CHECKED	
SUBMITTED	9/24/09
APPROVED	9/30/09
APPROVED	
APPROVED	
APPROVED	
APPROVED	
APPROVED	

NATIONAL AERONAUTICS AND SPACE ADMINISTRATION
JOHN F. KENNEDY SPACE CENTER, NASA
KENNEDY SPACE CENTER, FLORIDA

REPLACE PAD B SWITCHGEARS

ECS ROOM
EXISTING AND MODIFIED
ELECTRICAL PLANS

E13

FILE NO. | SIZE F | DWG. NO. 79K38550
PROJ. NO. 98778 | SHEET 15

FILE: E13.DWG THIS DRAWING PREPARED BY AutoCAD 2005

KSC FORM 1-11A (REV 6/91) (C/G 12/93)

NOTICE – WHEN GOVERNMENT DRAWINGS, SPECIFICATIONS, OR OTHER DATA ARE USED FOR ANY PURPOSE OTHER THAN IN CONNECTION WITH A DEFINITELY RELATED GOVERNMENT PROCUREMENT OPERATION, THE UNITED STATES GOVERNMENT THEREBY INCURS NO RESPONSIBILITY NOR ANY OBLIGATION WHATSOEVER, AND THE FACT THAT THE GOVERNMENT MAY HAVE FORMULATED, FURNISHED, OR IN ANY WAY SUPPLIED THE SAID DRAWINGS, SPECIFICATIONS OR OTHER DATA IS NOT TO BE REGARDED BY IMPLICATION OR OTHERWISE AS IN ANY MANNER LICENSING THE HOLDER OR ANY OTHER PERSON OR CORPORATION, OR CONVEYING ANY RIGHTS OR PERMISSION TO MANUFACTURE, USE, OR SELL ANY PATENTED INVENTION THAT MAY IN ANY WAY BE RELATED THERETO.

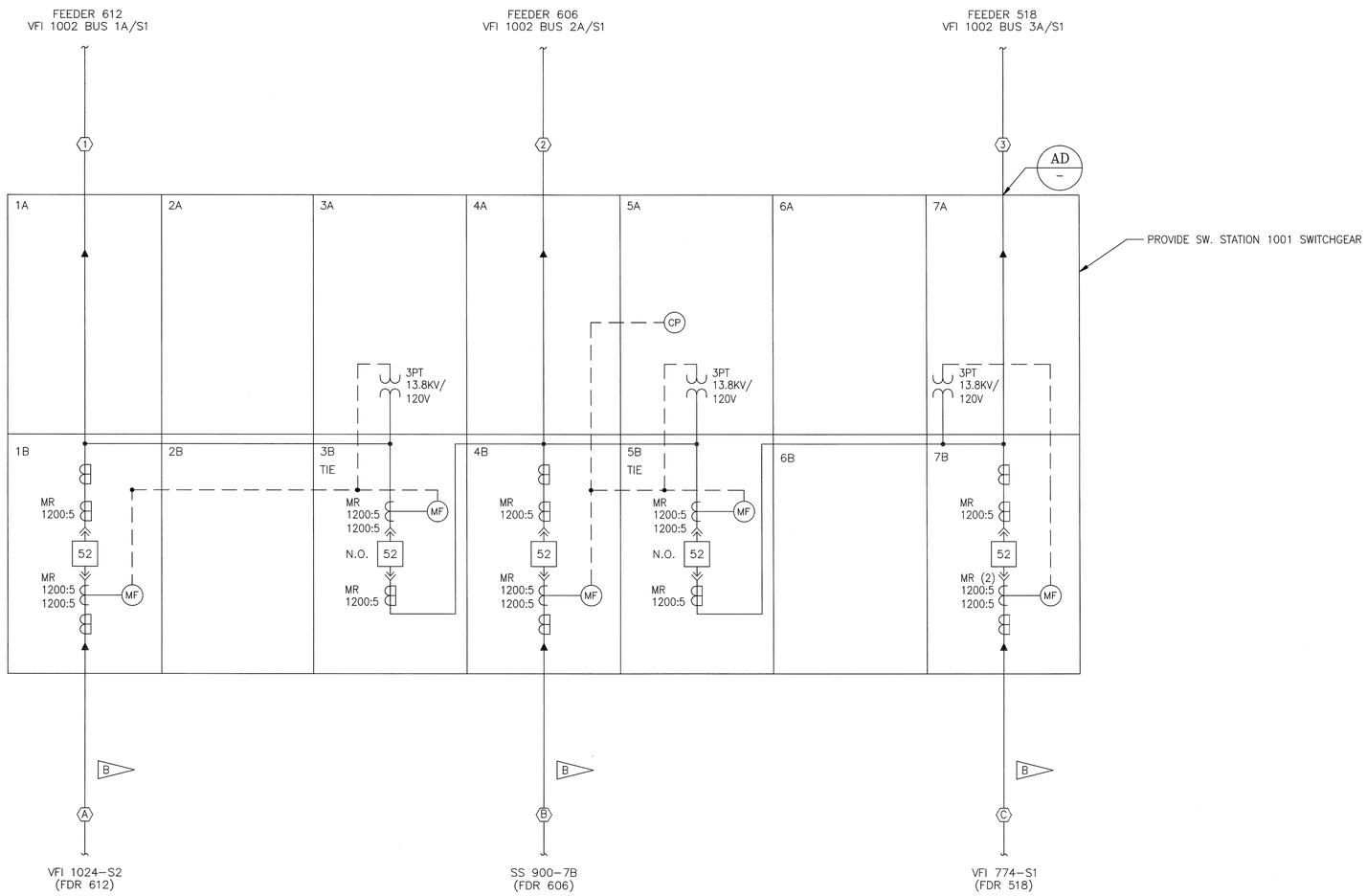

SW. STATION 1001 15KV SINGLE LINE DIAGRAM – MODIFIED

SPECIFIC NOTES:

A. FOR GENERAL NOTES AND LEGEND, SEE DRAWING V2.

B. RETERMINATE EXISITNG CABLE IN NEW EQUIPMENT. IF THE CABLE IS TOO SHORT TO RETERMINATE, CONTRACTOR SHALL PROVIDE SPLICE TO EXISTING CABLE IN PCV–4

C. NOT USED

D. SEE DRAWING E20 FOR CABLE SCHEDULE.

E. ALL CT'S ARE MR 1200:5 UNLESS INDICATED OTHERWISE

F. NOT USED

G. SHORT ALL SPARE CT'S

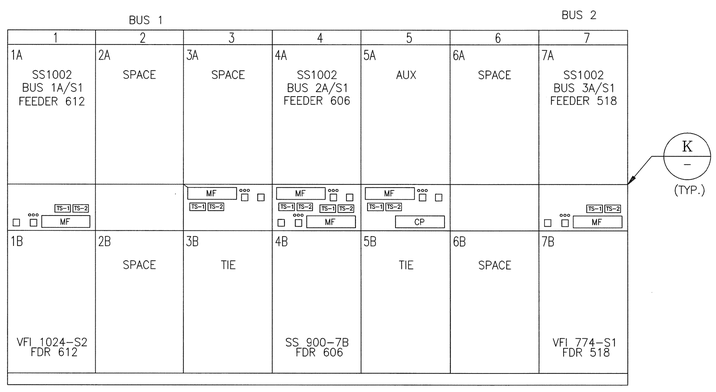

SW. STATION 1001

SW. STATION 1001 – FRONT ELEVATION

NOT TO SCALE

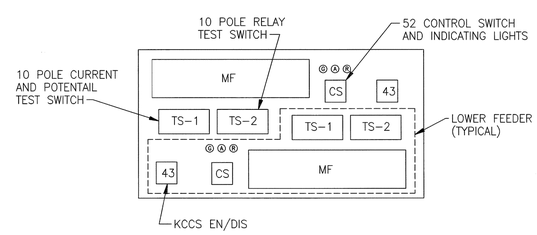

TYPICAL INSTRUMENT COMPARTMENT

NOT TO SCALE

SYM.	ZONE	DESCRIPTION	DATE	APPROVED
		REVISIONS		

FRED WILSON & ASSOCIATES, INC
ENGINEERS
C. A. NO. 7188
3970 HENDRICKS AVENUE
JACKSONVILLE, FL 32207

SIGNATURES		DATE
DESIGNED	D. TRANG	05/2009
DRAWN	B. PEARCE	05/2009
CHECKED		
SUBMITTED		9/22/09
APPROVED		9/22/09
APPROVED		
APPROVED		
APPROVED		
APPROVED		
APPROVED		

NATIONAL AERONAUTICS AND SPACE ADMINISTRATION
JOHN F. KENNEDY SPACE CENTER, NASA
KENNEDY SPACE CENTER, FLORIDA

REPLACE PAD B SWITCHGEARS

SW. STATION 1001
15KC SINGLE LINE DIAGRAM–MODIFIED

E14

FILE NO. | SIZE F | DWG. NO. 79K38550

PROJ. NO. 98778 | SHEET 16

FILE: E14.DWG

THIS DRAWING PREPARED BY AutoCAD 2005

KSC FORM 1–11A (REV 6/91) (C/G 12/93)

NOTICE – WHEN GOVERNMENT DRAWINGS, SPECIFICATIONS, OR OTHER DATA ARE USED FOR ANY PURPOSE OTHER THAN IN CONNECTION WITH A DEFINITELY RELATED GOVERNMENT PROCUREMENT OPERATION, THE UNITED STATES GOVERNMENT THEREBY INCURS NO RESPONSIBILITY NOR ANY OBLIGATION WHATSOEVER; AND THE FACT THAT THE GOVERNMENT MAY HAVE FORMULATED, FURNISHED, OR IN ANY WAY SUPPLIED THE SAID DRAWING, SPECIFICATION, OR OTHER DATA IS NOT TO BE REGARDED BY IMPLICATION OR OTHERWISE AS IN ANY MANNER LICENSING THE HOLDER OR ANY OTHER PERSON OR CORPORATION, OR CONVEYING ANY RIGHTS OR PERMISSION TO MANUFACTURE, USE, OR SELL ANY PATENTED INVENTION THAT MAY IN ANY WAY BE RELATED THERETO.

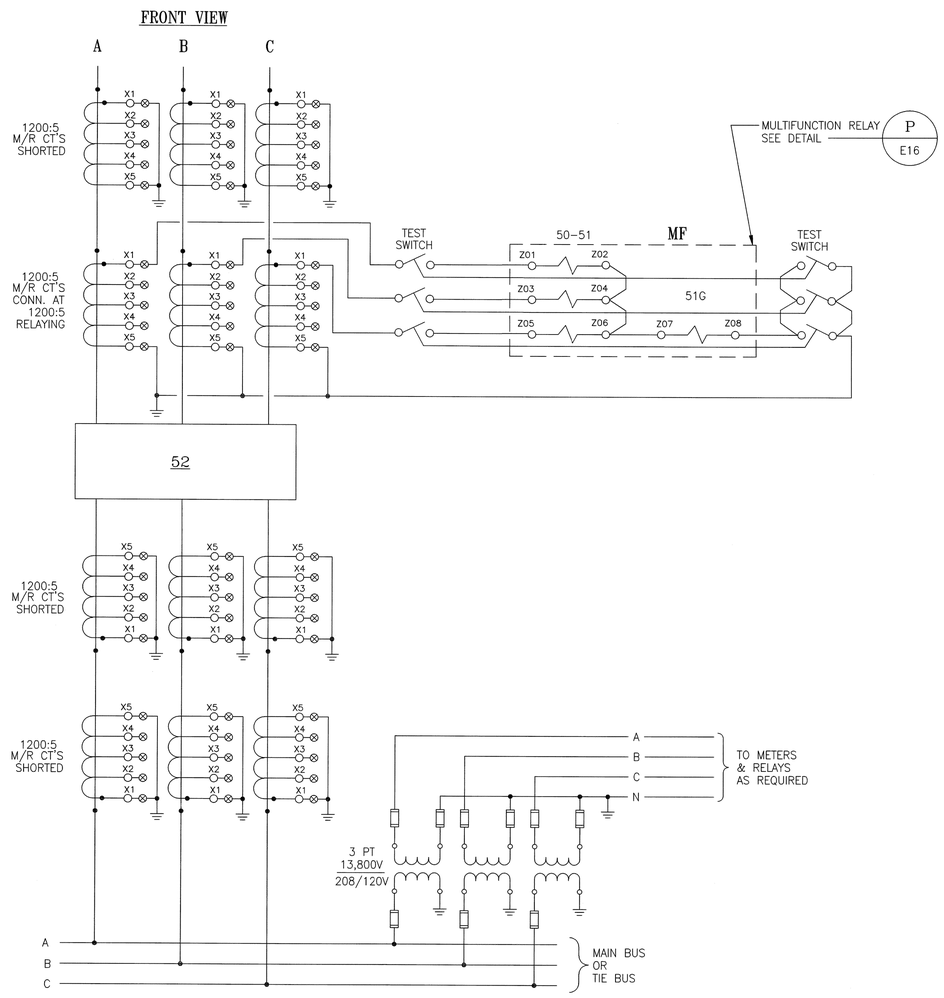

TYPICAL MAIN & TIE BREAKER 3-LINE

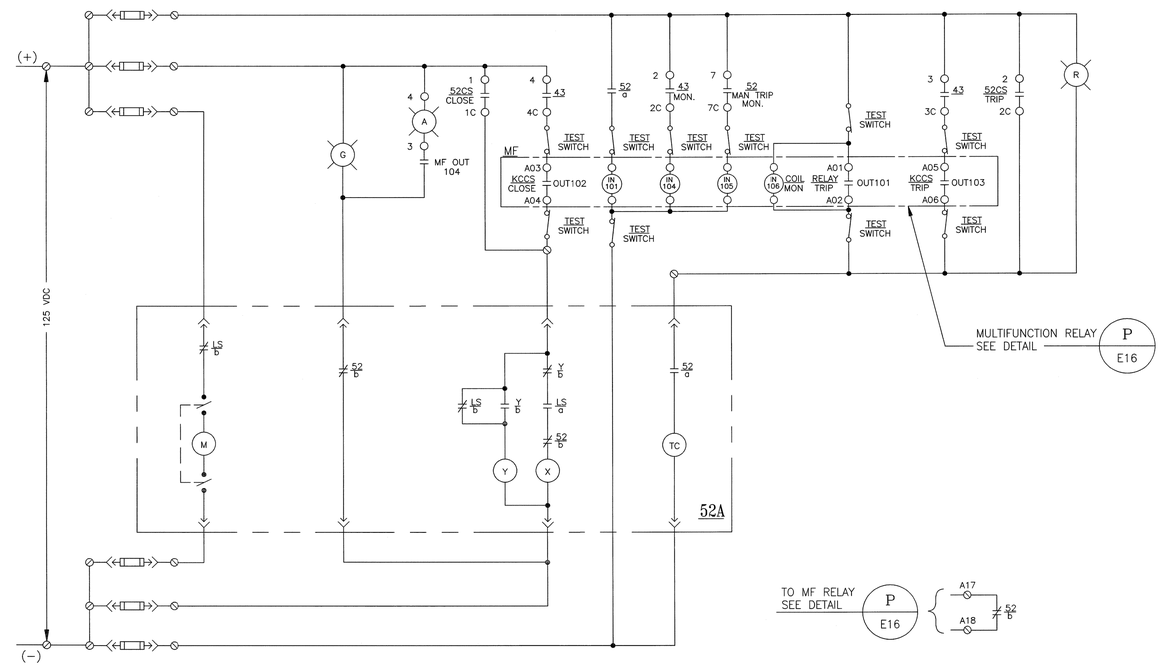

TYPICAL MAIN AND TIE BREAKER CONTROL

SPECIFIC NOTES:

A. FOR GENERAL NOTES AND LEGEND SEE DRAWING V2.

B. PROVIDE LABEL FOR EACH "43" SWITCH WHICH STATES "BREAKER CAN BE OPERATED REMOTELY ONLY WHEN IN THE ENABLE POSITION".

LEGEND

CONTACT NUMBER — 1 — 52CS CLOSE — BREAKER CONTROL SWITCH — INDICATES STATE OF CONTROL SWITCH.

⊗ CT SHORTING BLOCK TERMINAL. SHORTING BLOCK SHALL BE ACCESSIBLE FROM THE FRONT OF THE CUBICLE.

52CS

CONTACTS ODD	CONTACTS EVEN		POSITION CLOSE	N A C	N A T	TRIP
1	2	1	X			
		2				X
3	4	3	X	X		
		4				
5	6	5		X	X	
		6	X			
7	8	7				X
		8				X

43
KCCS ENABLE/DISABLE SWITCH

CONTACTS ODD	CONTACTS EVEN		POS ENABLE	DISABLE
1	2	1	X	
		2	X	
3	4	3	X	
		4	X	

B

BREAKER CONTROL SWITCH DEVELOPEMENT 52CS

SYM.	ZONE	DESCRIPTION	DATE	APPROVED
		REVISIONS		

FRED WILSON & ASSOCIATES, INC
ENGINEERS
C. A. NO. 7188
3970 HENDRICKS AVENUE
JACKSONVILLE, FL 32207

SIGNATURES		DATE
DESIGNED	D. TRANG	05/2009
DRAWN	B. PEARCE	05/2009
CHECKED		
SUBMITTED		9/22/09
APPROVED		9/22/09
APPROVED		
APPROVED		
APPROVED		
APPROVED		
APPROVED		

NATIONAL AERONAUTICS AND SPACE ADMINISTRATION
JOHN F. KENNEDY SPACE CENTER, NASA
KENNEDY SPACE CENTER, FLORIDA

REPLACE PAD B SWITCHGEARS

SW. STATION 1001
15KV MAIN BREAKER CONTROL

FILE NO. | SIZE F | DWG. NO. 79K38550
PROJ. NO. 98778 | SHEET 17

E15

FILE: E15.DWG THIS DRAWING PREPARED BY AutoCAD 2005

KSC FORM 1-11A (REV 6/91) (C/G 12/93)

NOTICE – WHEN GOVERNMENT DRAWINGS, SPECIFICATIONS, OR OTHER DATA ARE USED FOR ANY PURPOSE OTHER THAN IN CONNECTION WITH A DEFINITELY RELATED GOVERNMENT PROCUREMENT OPERATION, THE UNITED STATES GOVERNMENT THEREBY INCURS NO RESPONSIBILITY NOR ANY OBLIGATION WHATSOEVER; AND THE FACT THAT THE GOVERNMENT MAY HAVE FORMULATED, FURNISHED, OR IN ANY WAY SUPPLIED THE SAID DRAWINGS, SPECIFICATIONS, OR OTHER DATA IS NOT TO BE REGARDED BY IMPLICATION OR OTHERWISE AS IN ANY MANNER LICENSING THE HOLDER OR ANY OTHER PERSON OR CORPORATION, OR CONVEYING ANY RIGHTS OR PERMISSION TO MANUFACTURE, USE, OR SELL ANY PATENTED INVENTION THAT MAY IN ANY WAY BE RELATED THERETO.

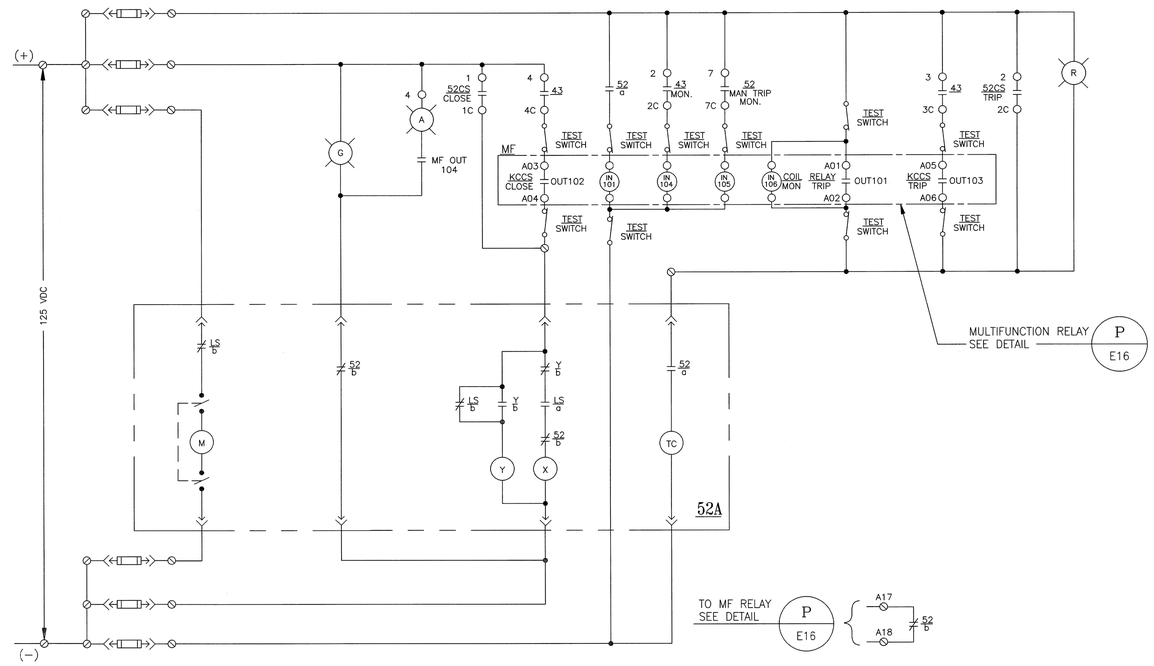

TYPICAL FEEDER BREAKER CONTROL

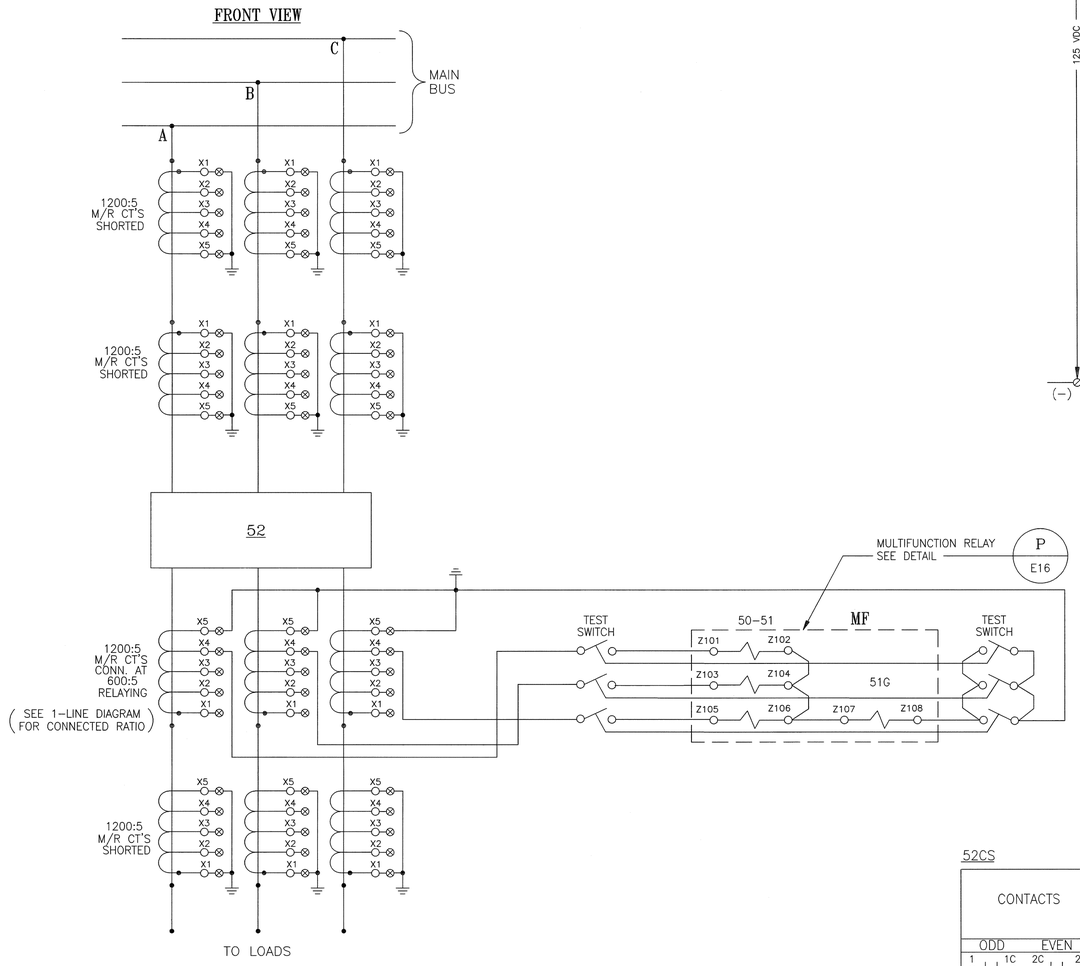

TYPICAL FEEDER 3–LINE

52CS

CONTACTS (ODD – EVEN)		POSITION: CLOSE	N.A.C.	N.A.T.	TRIP
1 – 1C, 2C – 2	1	X			
	2				X
3 – 3C, 4C – 4	3	X	X		
	4				
5 – 5C, 6C – 6	5		X	X	
	6	X			
7 – 7C, 8C – 8	7				X
	8				X

43
KCCS ENABLE/DISABLE SWITCH

CONTACTS (ODD – EVEN)		POS: ENABLE	DISABLE
1 – 1C, 2C – 2	1	X	
	2	X	
3 – 3C, 4C – 4	3	X	
	4	X	

C

BREAKER CONTROL SWITCH DEVELOPEMENT 52CS

SPECIFIC NOTES:

A. FOR GENERAL NOTES AND LEGEND SEE DRAWING V2.

B SEE DRAWING E12 FOR KCCS BLOCK DIAGRAM

C PROVIDE LABEL FOR EACH "43" SWITCH WHICH STATES "BREAKER CAN BE OPERATED REMOTELY ONLY WHEN IN THE ENABLE POSITION".

SYM.	ZONE	DESCRIPTION	DATE	APPROVED
		REVISIONS		

FRED WILSON & ASSOCIATES, INC
ENGINEERS
C. A. NO. 7188
3970 HENDRICKS AVENUE
JACKSONVILLE, FL 32207

SIGNATURES		DATE
DESIGNED	D. TRANG	05/2009
DRAWN	B. PEARCE	05/2009
CHECKED		
SUBMITTED		9/29/09
APPROVED		9/29/09
APPROVED		
APPROVED		
APPROVED		
APPROVED		
APPROVED		

NATIONAL AERONAUTICS AND SPACE ADMINISTRATION
JOHN F. KENNEDY SPACE CENTER, NASA
KENNEDY SPACE CENTER, FLORIDA

REPLACE PAD B SWITCHGEARS

SW. STATION 1001
15KV FEEDER BREAKER CONTROL

E16

FILE NO. | SIZE F | DWG. NO. 79K38550
PROJ. NO. 98778 | SHEET 18

FILE: E16.DWG

THIS DRAWING PREPARED BY AutoCAD 2005

KSC FORM 1-11A (REV 6/91) (C/G 12/93)

NOTICE – WHEN GOVERNMENT DRAWINGS, SPECIFICATIONS, OR OTHER DATA ARE USED FOR ANY PURPOSE OTHER THAN IN CONNECTION WITH A DEFINITELY RELATED GOVERNMENT PROCUREMENT OPERATION, THE UNITED STATES GOVERNMENT THEREBY INCURS NO RESPONSIBILITY NOR ANY OBLIGATION WHATSOEVER; AND THE FACT THAT THE GOVERNMENT MAY HAVE FORMULATED, FURNISHED, OR IN ANY WAY SUPPLIED THE SAID DRAWINGS, SPECIFICATIONS, OR OTHER DATA IS NOT TO BE REGARDED BY IMPLICATION OR OTHERWISE AS IN ANY MANNER LICENSING THE HOLDER OR ANY OTHER PERSON OR CORPORATION, OR CONVEYING ANY RIGHTS OR PERMISSION TO MANUFACTURE, USE, OR SELL ANY PATENTED INVENTION THAT MAY IN ANY WAY BE RELATED THERETO.

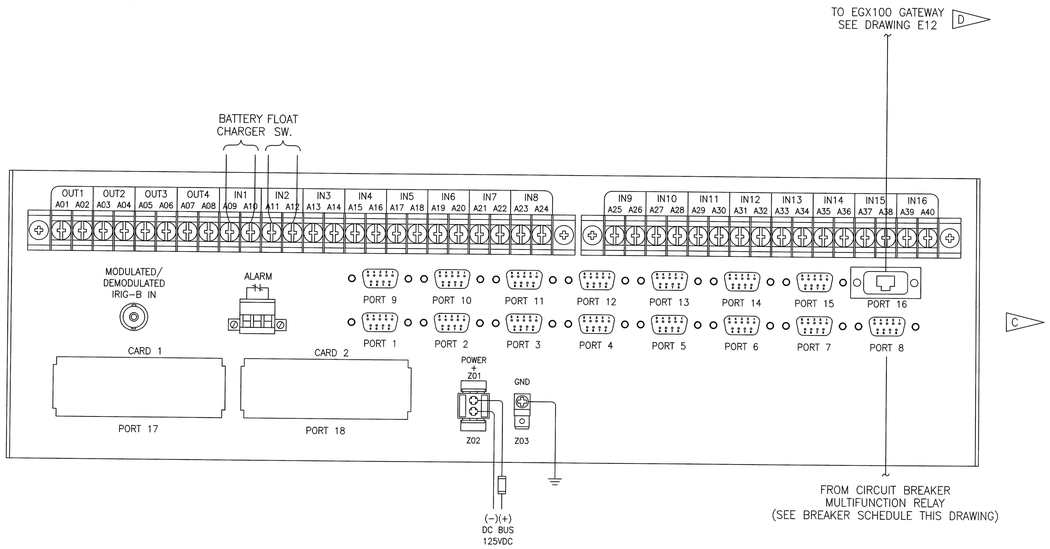

COMMUNICATIONS PROCESSOR WIRING DIAGRAM (SEE SCHEDULE AND SCHUEMATIC THIS SHEET)

NOT TO SCALE

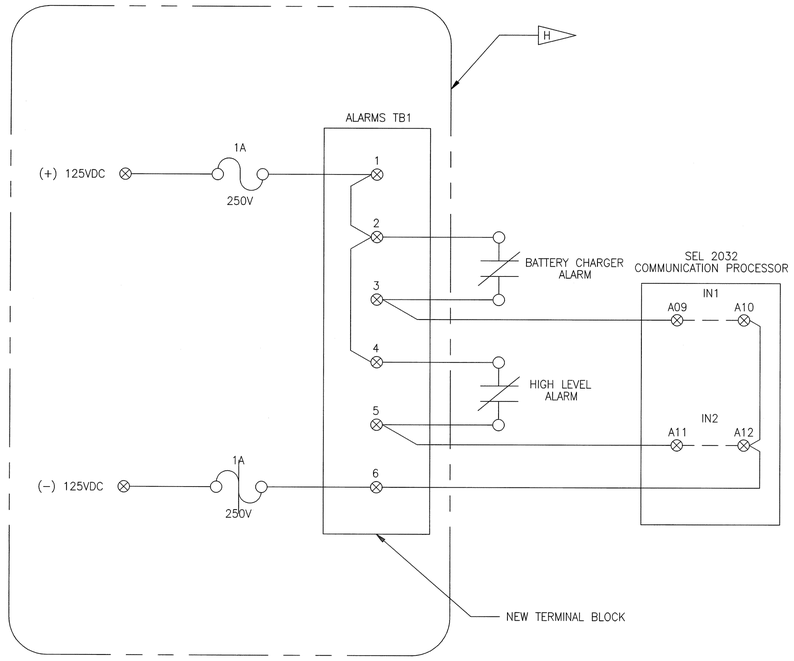

NOTE: CONTACTS SHOWN IN THE NOT ALARM STATE

CONNECTION DIAGRAM FOR FOR BATTERY CHARGER/FLOW SWITCH

SPECIFIC NOTES:

A. FOR GENERAL NOTES AND LEGEND, SEE DRAWING V2.

B. SEE DRAWING E---- FOR KCCS BLOCK DIAGRAM.

C. INSTALL A D139 MALE-TO-MALE GENDER MENDER FOR RS232 CABLE

D. INSTALL EGX100 RS232 CABLE FROM SQUARE D EGX CONFIGURATION KIT PART NO. TCSEAK0100

E. ETHERNET GATEWAY, SQUARE D EGX 100 OR APPROVED EQUAL

F. 50 WATT, 125DC/24VDC POWER SUPPLY, ACROMAL PART NO. PS5R-D24 OR APPROVED EQUAL

G. ETHERNET SWITCH WITH SINGLE MODE FIBER OPTIC CONNECTION N-TRON PART NO. 509FXE-ST-15 OR APPROVED EQUAL

H. INSTALL TERMINAL BLOCK AND FUSE BLOCK IN THE 2032 CUBICLE AND CONNECT AS SHOWN. ALARM CONNECTIONS AND 2032 CONNECTIONS BY OTHERS AND NEC. LABEL THE TERMINAL BLOCK AS SHOWN

COMMUNICATION PROCESSOR BREAKER INTERCONNECTION SCHEDULE

PROCESSOR PORT NO.	SW STATION 1001 BREAKER NUMBER
1	BKR 1B
2	BKR 3B
3	BKR 4B
4	BKR 5B
5	BKR 7B
6	
7	
8	
9	
10	
11	
12	
13	
14	
15	
16	

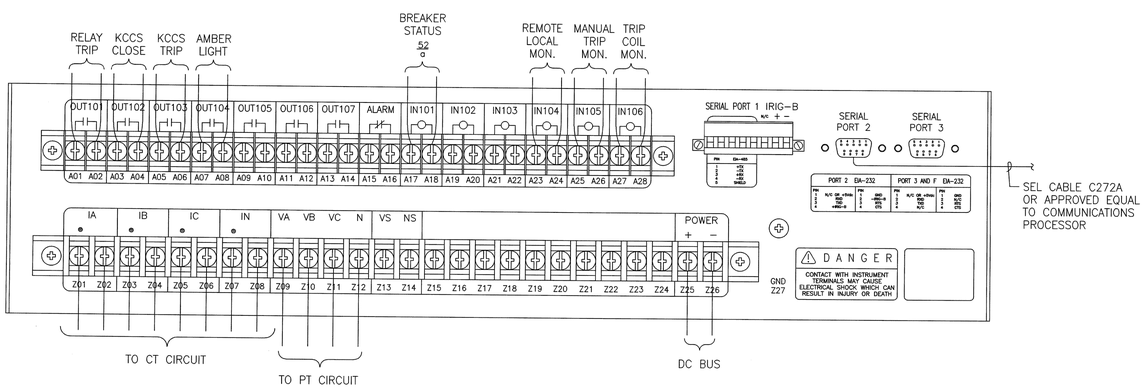

MULTI-FUNCTION RELAY WIRING DIAGRAM (MF)

NOT TO SCALE

P
E17
E18

15KV SW. STATION 1001

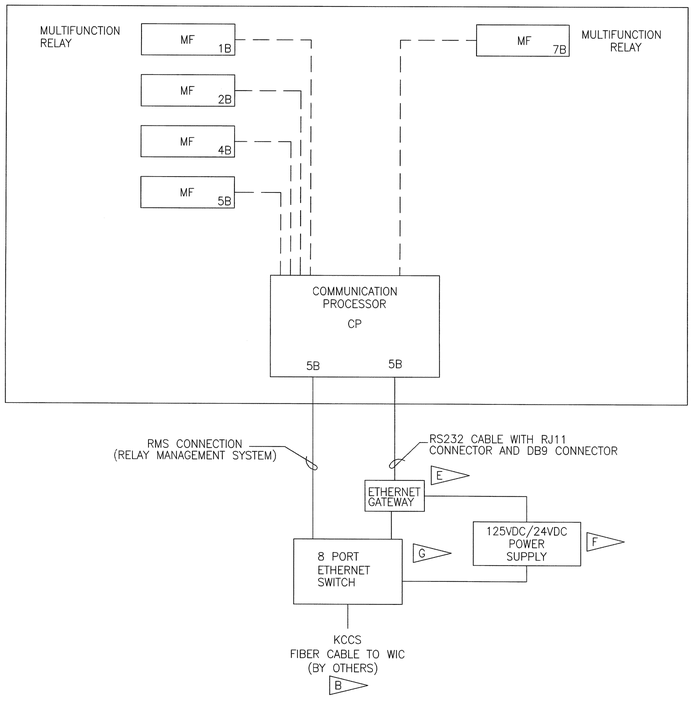

FILE: E17.DWG

THIS DRAWING PREPARED BY AutoCAD 2005

E17

SYM.	ZONE	DESCRIPTION	DATE	APPROVED
		REVISIONS		

FRED WILSON & ASSOCIATES, INC
ENGINEERS
FW&A
C. A. NO. 7188
3970 HENDRICKS AVENUE
JACKSONVILLE, FL 32207

SIGNATURES		DATE
DESIGNED	D. TRANG	05/2009
DRAWN	B. PEARCE	05/2009
CHECKED		
SUBMITTED		9/29/09
APPROVED		9/29/09
APPROVED		
APPROVED		
APPROVED		
APPROVED		
APPROVED		

NATIONAL AERONAUTICS AND SPACE ADMINISTRATION
JOHN F. KENNEDY SPACE CENTER, NASA
KENNEDY SPACE CENTER, FLORIDA

REPLACE PAD B SWITCHGEARS

SW. STATION 1001 COMMUNICATION PROCESSOR AND PROTECTION RELAY

FILE NO. | SIZE F | DWG. NO. 79K38550

PROJ. NO. 98778 | SHEET 19

KSC FORM 1-11A (REV 6/91) (C/G 12/93)

NOTICE – WHEN GOVERNMENT DRAWINGS, SPECIFICATIONS, OR OTHER DATA ARE USED FOR ANY PURPOSE OTHER THAN IN CONNECTION WITH A DEFINITELY RELATED GOVERNMENT PROCUREMENT OPERATION, THE UNITED STATES GOVERNMENT THEREBY INCURS NO RESPONSIBILITY NOR ANY OBLIGATION WHATSOEVER; AND THE FACT THAT THE GOVERNMENT MAY HAVE FORMULATED, FURNISHED, OR IN ANY WAY SUPPLIED THE SAID DRAWINGS, SPECIFICATIONS, OR OTHER DATA, IS NOT TO BE REGARDED BY IMPLICATION OR OTHERWISE AS IN ANY MANNER LICENSING THE HOLDER OR ANY OTHER PERSON OR CORPORATION, OR CONVEYING ANY RIGHTS OR PERMISSION TO MANUFACTURE, USE, OR SELL ANY PATENTED INVENTION THAT MAY IN ANY WAY BE RELATED THERETO.

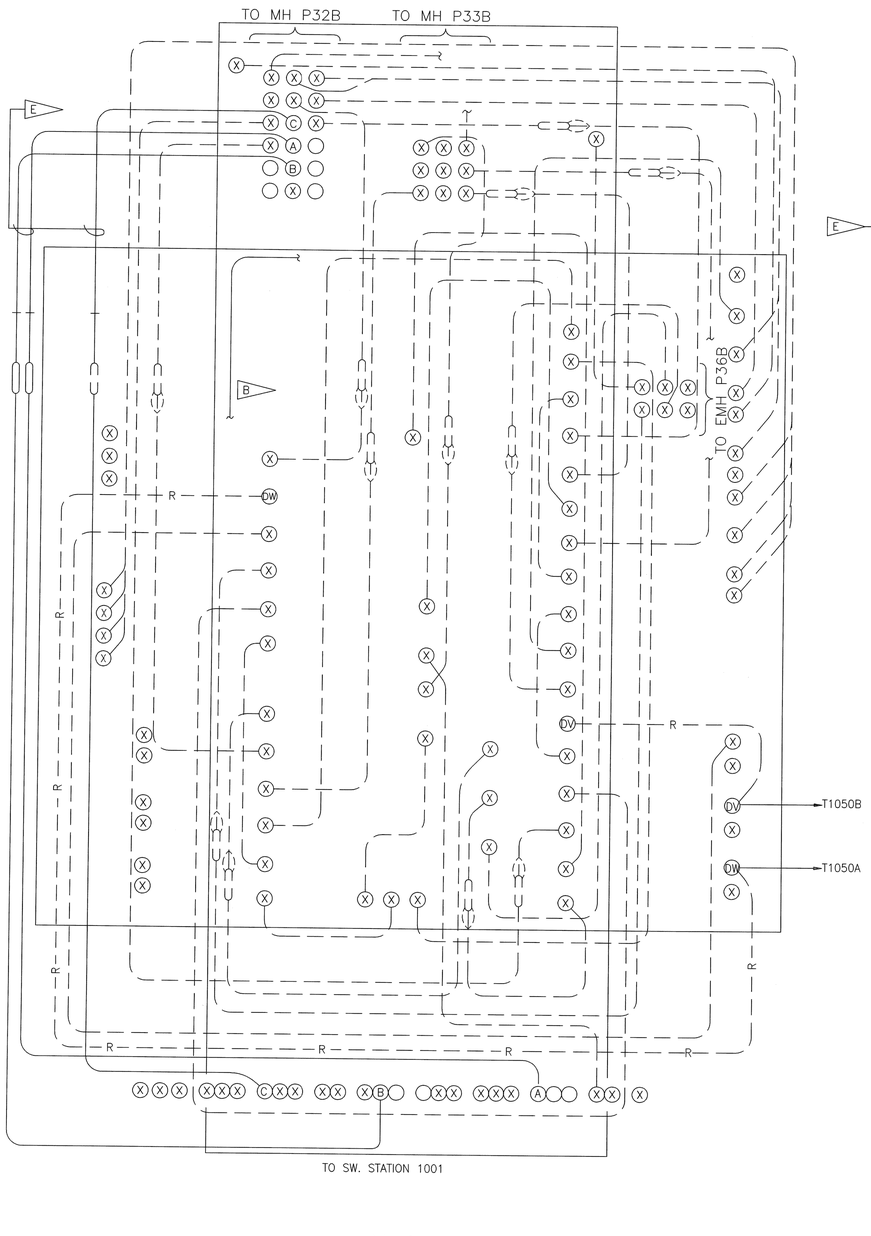

EXISTING
PCV-4 (SW. STA. 1001) (E / E10)
NOT TO SCALE
E

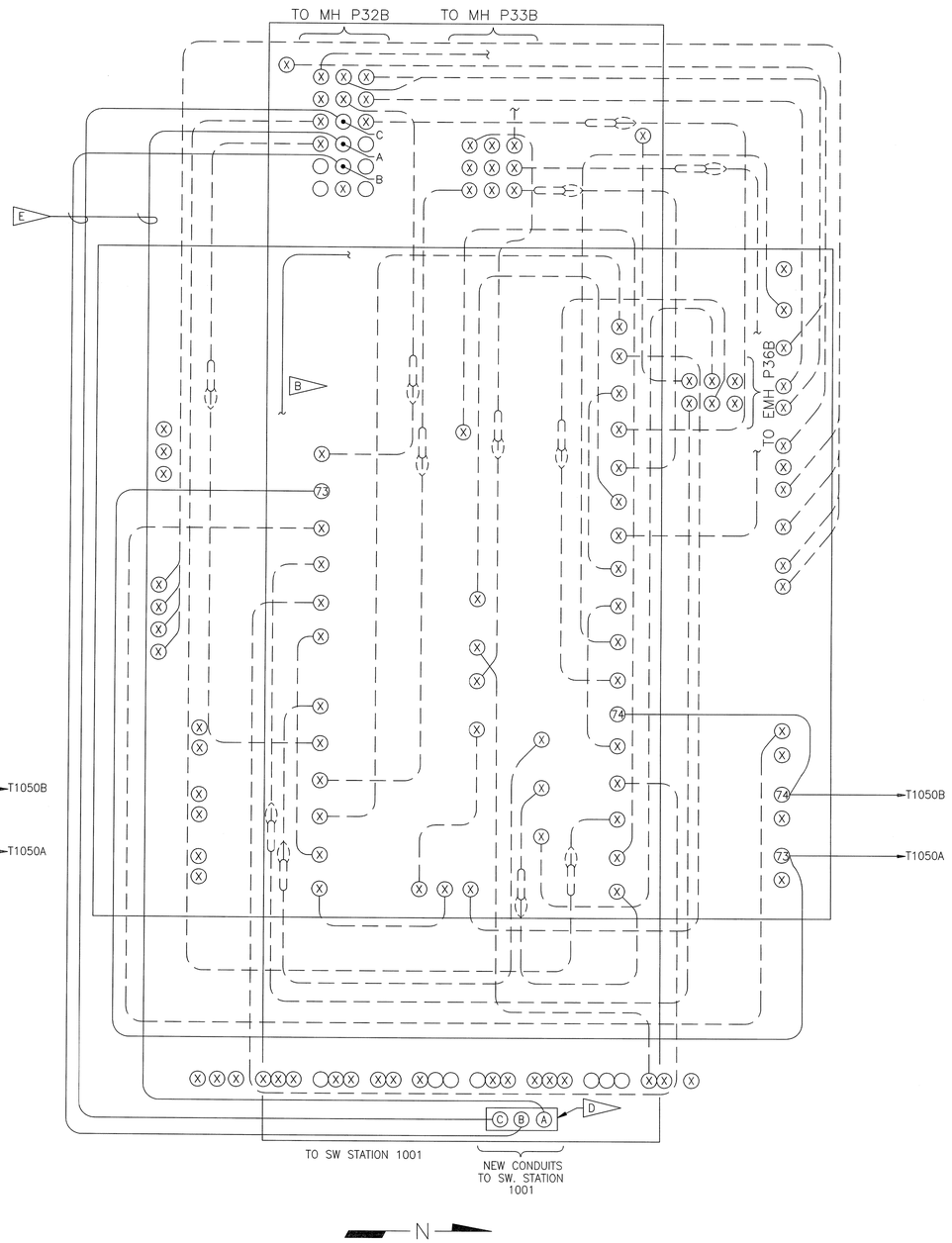

MODIFIED
PCV-4 (SW. STA. 1001) (G / E11 S2)
NOT TO SCALE
E

SPECIFIC NOTES:

A. FOR GENERAL NOTES AND LEGEND, SEE DRAWING V2.

B. EXISTING #4/0 GROUND RING AROUND BOTTOM OF VAULT.

C. SEE DRAWING E13 FOR CABLE SCHEDULE.

D. CORE DRILL VAULT FOR CONDUITS. SEE DETAIL R/E15 FOR DUCT ENTRY TO VAULT DETAIL.

E. RETERMINATE EXISTING CABLE IN NEW EQUIPMENT. IF THE CABLE IS TOO SHORT TO RETERMINATE, THE CONTRACTOR SHALL PROVIDE SPLICE TO TO EXISTING CABLE IN PCV-4

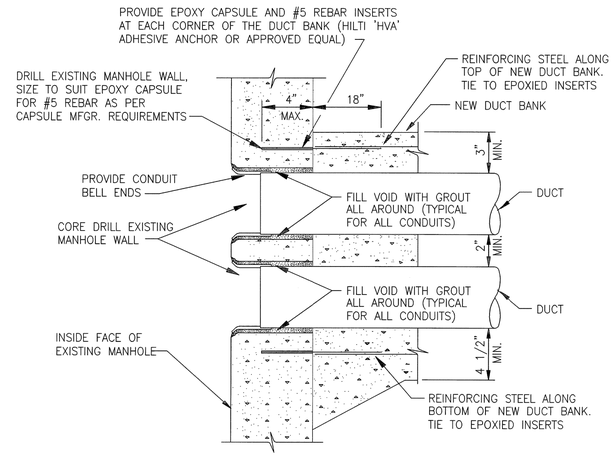

DUCT ENTRY TO VAULT (R)
NOT TO SCALE

SYM.	ZONE	DESCRIPTION	DATE	APPROVED
		REVISIONS		

FRED WILSON & ASSOCIATES, INC ENGINEERS
FW&A
C. A. NO. 7188
3970 HENDRICKS AVENUE
JACKSONVILLE, FL 32207

SIGNATURES		DATE
DESIGNED	D. TRANG	05/2009
DRAWN	B. PEARCE	05/2009
CHECKED		
SUBMITTED		9/2/09
APPROVED		9/10/09
APPROVED		
APPROVED		
APPROVED		
APPROVED		
APPROVED		

NATIONAL AERONAUTICS AND SPACE ADMINISTRATION
JOHN F. KENNEDY SPACE CENTER, NASA
KENNEDY SPACE CENTER, FLORIDA

REPLACE PAD B SWITCHGEARS

PAD B
APRON BUILDING PCV-4

FILE NO.	SIZE	DWG. NO.
	F	79K38550
PROJ. NO. 98778		SHEET 20

E18

FILE: E18.DWG

THIS DRAWING PREPARED BY AutoCAD 2000

KSC FORM 1-11A (REV 6/91) (C/G 12/93)

NOTICE – WHEN GOVERNMENT DRAWINGS, SPECIFICATIONS, OR OTHER DATA ARE USED FOR ANY PURPOSE OTHER THAN IN CONNECTION WITH A DEFINITELY RELATED GOVERNMENT PROCUREMENT OPERATION, THE UNITED STATES GOVERNMENT THEREBY INCURS NO RESPONSIBILITY NOR ANY OBLIGATION WHATSOEVER, AND THE FACT THAT THE GOVERNMENT MAY HAVE FORMULATED, FURNISHED, OR IN ANY WAY SUPPLIED THE SAID DRAWINGS, SPECIFICATIONS, OR OTHER DATA IS NOT TO BE REGARDED BY IMPLICATION OR OTHERWISE AS IN ANY MANNER LICENSING THE HOLDER OR ANY OTHER PERSON OR CORPORATION, OR CONVEYING ANY RIGHTS OR PERMISSION TO MANUFACTURE, USE, OR SELL ANY PATENTED INVENTION THAT MAY IN ANY WAY BE RELATED THERETO.

EXISTING CONDUIT AND CABLE SCHEDULE

CABLE NO.	VOLT	SIZE C	FROM	TO	REMARKS
A	13.8KV	3–1/C 350 KCMIL (EPR)	VFI 1024/S2	SWITCHING STATION 1001/1	
B	13.8KV	3–1/C 350 KCMIL (EPR)	SW. STATION 902/7B	SWITCHING STATION 1001/4	
C	13.8KV	3–1/C 350 KCMIL (EPR)	VFI 443/S1	SWITCHING STATION 1001/1	
D	13.8KV	3–1/C 350 KCMIL (EPR)	SWITCHING STATION 1001/1	VFI 1002–1A/S1	
E	13.8KV	3–1/C 350 KCMIL (EPR)	SWITCHING STATION 1001/5	VFI 1002–2A/S1	
F	13.8KV	3–1/C 350 KCMIL (EPR)	SWITCHING STATION 1001/7	VFI 1002–3/S1	
BA	480V	2–1/C #2 AWG	SWITCHING STATION 1001/5	BATTERY CHARGER	REMOVE CABLE & CONDUIT
BB	208V	2–1/C #2 AWG	SWITCHING STATION 1001/5	BATTERY CHARGER	REMOVE CABLE & CONDUIT
BC			SWITCHING STATION 1001/1	T1053	REMOVE CABLE & CONDUIT
BD			SWITCHING STATION 1001/1	T1053	REMOVE CABLE & CONDUIT
BE	480V	2 SETS 3–1/C 500KCMIL, 4" C	SUBSTA 1041A	MCB–1	REMOVE CABLE
BF	480V	2 SETS 3–1/C 500KCMIL, 4" C	MCB–1	HYPERGOL OXIDIZER SWBD	REMOVE CABLE
BG	480V	2 SETS 3–1/C 500KCMIL, 4" C	SUBSTA 1041B	MCB–2	REMOVE CABLE
BH	480V	2 SETS 3–1/C 500KCMIL, 4" C	MCB–2	HYPERGOL OXIDIZER SWBD	REMOVE CABLE
BJ	480V	3–1/C #12, 3/4" C	MCB–1	CB–1	REMOVE CABLE & CONDUIT
BK	480V	3–1/C #12, 3/4" C	CB–1	ATS–93 (ALT)	REMOVE CABLE & CONDUIT
BL	480V	3–1/C #12, 3/4" C	CB–2	ATS–93 (NORM)	REMOVE CABLE & CONDUIT
BM	480V	3–1/C #12, 3/4" C	ATS–93	FIRE ALARM XFMR PRI BKR	REMOVE CABLE & CONDUIT
BN	480V	3–1/C #12, 3/4" C	FIRE ALARM XFMR PRI BKR	FIRE ALARM XFMR	REMOVE CABLE & CONDUIT
BP	120V	2–1/C #12, 3/4" C	FIRE ALRM XFMR	FIRE ALARM CAB	REMOVE CABLE
BR	480V	3–1/C #12, 3/4" C	ATS–93	MAIN BREAKER MAIN/TIE BKR CONTL CAB	REMOVE CABLE & CONDUIT
BS	480V	3–1/C #12, 3/4" C	MAIN BREAKER MAIN/TIE BKR CONTL CAB	MAIN/TIE BKR CONTL CAB	REMOVE CABLE & CONDUIT
BT	480V	3–1/C #12, 3/4" C	HYPERGOL OXIDIZER SWBD	TCU SKID – CW PUMP	REUSE EXISTING CABLE & CONDUIT
BU	480V	3–1/C #1, 1–1/4" C	HYPERGOL OXIDIZER SWBD	TCU SKID HEATER	REUSE EXISTING CABLE & CONDUIT
DV	13.8KV	3–1/C #2/0	VFI 1002–1B/V3	SUBSTA 1050A PRI SW	REMOVE CABLE
DW	13.8KV	3–1/C #2/0	VFI 1002–2B/V3	SUBSTA 1050B PRI SW	REMOVE CABLE
DY	480V	6–1/C 600KCMIL, 4" C	ECS SWGR #1	ECS MCC A	REMOVE CABLE & CONDUIT
DZ	480V	3–1/C 750KCMIL, 4" C	ECS SWGR #1 (SWGR 1050A)	SOUTH BLOWER STARTER	REUSE EXISTING CABLE & TRAY
EA	480V	3/C 750KCMIL, #4/0G	ECS SWGR #1 (SWGR 1050A)	STANDBY BLOWER STARTER	REUSE EXISTING CABLE & TRAY & NEW 4" CONDUIT D
EB	480V	3–1/C 750KCMIL, 4" C	ECS SWGR #1 (SWGR 1050A)	CHILLER #1 STARTER	REUSE EXISTING CABLE & TRAY
EC	480V	2 SETS 3–1/C 500KCMIL, 4" C	ECS SWGR #1 (SWGR 1050A)	PCR HEATER #1 SCR	REUSE EXISTING CABLE & TRAY
ED	480V	3–1/C #4/0, 4" C	ECS SWGR #1	LPAC BLOWER #1 STARTER	REMOVE CABLE & CONDUIT
EE	480V	3–1/C #4/0, 4" C	ECS SWGR #1 (SWGR 1050A)	PAYLOAD COMP'T HTR #1 SCR	REUSE EXISTING CABLE & TRAY
EF	480V	3–1/C #4/0, 4" C	ECS SWGR #1	LPAC HEATER #1 SCR	REMOVE CABLE & CONDUIT
EG	480V	6–1/C 600KCMIL, 4" C	ECS SWGR #2	ECS MCC B	REMOVE CABLE & CONDUIT
EH	480V	3–1/C 750KCMIL, 4" C	ECS SWGR #2 (SWGR 1050B)	NORTH BLOWER STARTER	REUSE EXISTING CABLE & TRAY
EJ	480V	3/C 750KCMIL, #4/0G	ECS SWGR #2 (SWGR 1050B)	CHILLER #2 STARTER	REUSE EXISTING CABLE & TRAY & NEW 4" CONDUIT D
EK	480V	3–1/C 750KCMIL, 4" C	ECS SWGR #2 (SWGR 1050B)	CHILLER #3 STARTER	REUSE EXISTING CABLE & TRAY
EL	480V	2 SETS 3–1/C 500KCMIL, 4" C	ECS SWGR #2 (SWGR 1050B)	PCR HEATER #2 SCR	REUSE EXISTING CABLE & TRAY
EM	480V	3–1/C #4/0, 4" C	ECS SWGR #2	LPAC BLOWER #2 STARTER	REMOVE CABLE & CONDUIT
EN	480V	3–1/C #4/0, 4" C	ECS SWGR #2 (SWGR 1050B)	PAYLOAD COMP'T HTR #2 SCR	REUSE EXISTING CABLE & TRAY
EP	480V	3–1/C #4/0, 4" C	ECS SWGR #2	LPAC HEATER #2 SCR	REMOVE CABLE & CONDUIT
ER	480V	3–1/C #4/0, #6G, 2" C	ECS MCC A	COOLING TOWER COND. PUMP #1	REUSE EXISTING CABLE & TRAY
ES	480V	3–1/C #8, #10G	ECS MCC A	COOLING TOWER FAN #1	REUSE EXISTING CABLE & TRAY
ET	480V	3–1/C #8, #10G	ECC MCC A	COOLING TOWER FAN #2	REUSE EXISTING CABLE & TRAY
EU	480V	3–1/C #8	ECC MCC A	INTERTANK ACCESS HTR #1 SCR	REUSE EXISTING CABLE & TRAY
EV	480V	3–1/C #2	ECC MCC A	SYSTEM PUMP #1 WATER/GLYCOL	REUSE EXISTING CABLE & TRAY
EW	480V	3–1/C #8	ECC MCC A	CABIN BLOWER #1	REUSE EXISTING CABLE & TRAY
EY	480V	3–1/C #4/0, #2G, 2"C	200A FUSED DISC. SW.	NORTH STEAM BOILER	REMOVE CABLE & CONDUIT
EZ	480V	3–1/C #6	ECC MCC A	ET NOSE CONE HTR DISC SW	REUSE EXISTING CABLE & TRAY
FA	480V	3–1/C #2	ECC MCC A	AFT COMP'T #1 HTR SCR	REUSE EXISTING CABLE & TRAY
FB	480V	3–1/C #8	ECC MCC A	CABIN HEATER #1 SCR	REUSE EXISTING CABLE & TRAY
FC	480V	3–1/C #10	ECC MCC A	POWER SUPPLY	REMOVE CABLE & CONDUIT (SPARE POWER SUPPLY)
FD	480V	3–1/C #2	ECC MCC A	SOUTH STEAM BOILER	REMOVE CABLE & CONDUIT
FE	480V	3–1/C #6	ECC MCC A	ET TPS HTR #1 SCR	REUSE EXISTING CABLE & TRAY
FF	480V	3–1/C #12, 3/4"C	ECC MCC A	REG A.C POWER SUPPLY	REUSE EXISTING CABLE & TRAY
FG	480V	3–1/C #8	ECC MCC A	MS25/SF–5	REUSE EXISTING CABLE & TRAY
FH	480V	3–1/C #6	ECC MCC A	FWD COMP'T HTR #1 SCR	REUSE EXISTING CABLE & TRAY
FJ	480V	4–1/C #12, 3/4" C	ECC MCC A	UNREG A.C. POWER SUPPLY #1	REUSE EXISTING CABLE & TRAY
FK	480V	4–1/C #12, 3/4" C	ECC MCC A	UNREG A/C POWER SUPPLY #2	REUSE EXISTING CABLE & TRAY
FM	480V	3–1/C #4/0, #6G, 2" C	ECS MCC B	COOLING TOWER COND PUMP #2	REUSE EXISTING CABLE & TRAY
FN	480V	3–1/C #6	ECS MCC B	INTERTANK ACCESS HTR #2 SCR	REUSE EXISTING CABLE & TRAY

C

CONTINUED ABOVE RIGHT

CONTINUED FROM BELOW LEFT

CABLE NO.	VOLT	SIZE	FROM	TO	REMARKS
FP	480V	3–1/C #2	ECS MCC B	SYSTEM PUMP #2 WATER/GLYCOL	REUSE EXISTING CABLE & TRAY
FR	480V	3–1/C #8	ECS MCC B	CABIN BLOWER #2	REUSE EXISTING CABLE & TRAY
FT	480V	3–1/C #2	ECS MCC B	AFT COMP'T #2 HTR SCR	REUSE EXISTING CABLE & TRAY
FU	480V	3–1/C #8	ECS MCC B	CABIN ACCESS ARM HTR #2 SCR	REUSE EXISTING CABLE & TRAY
FV	480V	3–1/C #6	ECS MCC B	POWER SUPPLY #6	REMOVE CABLE & CONDUIT (SPARE POWER SUPPLY)
FW	480V	3–1/C #6	ECS MCC B	POWER SUPPLY #6A	REMOVE CABLE & CONDUIT (SPARE POWER SUPPLY)
FY	480V	3–1/C #8	ECS MCC B	E.T. TPS HTR #2 SCR	REUSE EXISTING CABLE & TRAY
FZ	480V	3–1/C #12	ECS MCC B	REG A.C. POWER SUPPLY	REUSE EXISTING CABLE & TRAY
GA	480V	3–1/C #8, 3/4" C	ECS MCC B	FWD COMP HTR #2 SCR	REUSE EXISTING CABLE & TRAY
GB	480V	4–1/C #12, 3/4" C	ECS MCC B	UNREG A.C. POWER SUPPLY #1	REUSE EXISTING CABLE & TRAY
GC	480V	4–1/C #12, 3/4" C	ECS MCC B	UNREG A.C. POWER SUPPLY #2	REUSE EXISTING CABLE & TRAY
GN	480V	3–1/C #6, 1"C	ECS MCC B	COOLING TOWER FAN #3	REUSE EXISTING CABLE & TRAY
GP	480V	3–1/C #8, 1"C	ECS MCC B	TUBEAXIAL FAN STARTER	REUSE EXISTING CABLE & TRAY

C

SPECIFIC NOTES:

A. FOR LEGEND AND GENERAL NOTES, SEE DWG E1.

B. PROVIDE NEW CABLE TAGS ON AFFECTED EXISTING 15KV CABLES AS INDICATED. SEE DETAIL P/E20

C EXISTING CABLE SIZES WERE OBTAINED FROM FIELD INVESTIGATION AND DWG'S 39K615001, 39K6150023.

D ROUTE EXISTING CABLES TO NEW PANEL ECS.

SYM.	ZONE	DESCRIPTION	DATE	APPROVED

REVISIONS

FRED WILSON & ASSOCIATES, INC
ENGINEERS
C. A. NO. 7188
FW&A
3970 HENDRICKS AVENUE
JACKSONVILLE, FL 32207

SIGNATURES		DATE
DESIGNED	D. TRANG	05/2009
DRAWN	B. PEARCE	05/2009
CHECKED		
SUBMITTED		9/14/09
APPROVED		9/15/09
APPROVED		
APPROVED		
APPROVED		
APPROVED		
APPROVED		

NATIONAL AERONAUTICS AND SPACE ADMINISTRATION
JOHN F. KENNEDY SPACE CENTER, NASA
KENNEDY SPACE CENTER, FLORIDA

REPLACE PAD B SWITCHGEARS

EXISTING CONDUIT AND CABLE SCHEDULE

E19

FILE NO.	SIZE	DWG. NO.
	F	79K38550
PROJ. NO. 98778		SHEET 21

FILE: E19.DWG

THIS DRAWING PREPARED BY AutoCAD 2005

KSC FORM 1–11A (REV 6/91) (C/G 12/93)

NOTICE – WHEN GOVERNMENT DRAWINGS, SPECIFICATIONS, OR OTHER DATA ARE USED FOR ANY PURPOSE OTHER THAN IN CONNECTION WITH A DEFINITELY GOVERNMENT PROCUREMENT OPERATION, THE UNITED STATES GOVERNMENT THEREBY INCURS NO RESPONSIBILITY NOR ANY OBLIGATION WHATSOEVER; AND THE FACT THAT THE GOVERNMENT MAY HAVE FORMULATED, FURNISHED, OR IN ANY WAY SUPPLIED THE SAID DRAWINGS, SPECIFICATIONS, OR OTHER DATA, IS NOT TO BE REGARDED BY IMPLICATION OR OTHERWISE AS IN ANY MANNER LICENSING THE HOLDER OR ANY OTHER PERSON OR CORPORATION, OR CONVEYING ANY RIGHTS OR PERMISSION TO MANUFACTURE, USE, OR SELL ANY PATENTED INVENTION THAT MAY IN ANY WAY BE RELATED THERETO.

NEW CONDUIT AND CABLE SCHEDULE

CABLE NO.	VOLT	SIZE	FROM	TO	REMARKS
A	13.8KV	3-1/C 350 KCMIL (EPR)	VFI 1024/S2	SW. STATION 1001/1	EXISTING CABLE IN NEW 4" CONDUIT B C
B	13.8KV	3-1/C 350 KCMIL (EPR)	SW. STATION 902 7B	SW. STATION 1001/4	EXISTING CABLE IN NEW 4" CONDUIT B C
C	13.8KV	3-1/C 350 KCMIL (EPR)	VFI 774/S1	SW. STATION 1001/7	EXISTING CABLE IN NEW 4" CONDUIT B C
1	13.8KV	3-1/C #4/0 EPR W/ #4/0 FULL CONC NEUT	SW. STATION 1001/1B	VFI 1002-1A/S1	PROVIDE NEW CABLE IN NEW 4" CONDUIT B
2	13.8KV	3-1/C #4/0 EPR W/ #4/0 FULL CONC NEUT	S. STATION 1001/4B	VFI 1002-2A/S1	PROVIDE NEW CABLE IN NEW 4" CONDUIT B
3	13.8KV	3-1/C #4/0 EPR W/ #4/0 FULL CONC NEUT	SW. STATION 1001/7B	VFI 1002-3/S1	PROVIDE NEW CABLE IN NEW 4" CONDUIT B
10	480V	3-1/C #4/0, #6G T.C	ECS MCC A	NORTH STEAM BOILER	PROVIDE CABLE IN NEW 2" CONDUIT & EXIST. TRAY
11	480V	3-1/C #6, #10G T.C	ECS MCC A	LPAC HEATER #1 SCR	PROVIDE CABLE IN NEW 3/4" CONDUIT & EXIST. TRAY
31	480V	3-1/C #6, #10G T.C	ECS MCC B	LPAC HEATER #2 SCR	PROVIDE CABLE IN NEW 3/4" CONDUIT & EXIST. TRAY
39	480V	2 SETS 3-1/C 600kcmil, #1/0G	ECS SWGR 1050A	ECS MCC A	PROVIDE CABLE IN NEW 4" CONDUIT
40	480V	2 SETS 3-1/C 600kcmil, #1/0G	ECS SWGR 1050B	ECS MCC B	PROVIDE CABLE IN NEW 4" CONDUIT
41	120V	2-1/C #2, #8G	PANEL LN	BATTERY CHARGER	PROVIDE CABLE IN NEW 2" CONDUIT
42	120V	2-1/C #12, #12G	PANEL LN	SW. STATION 1001/7	PROVIDE CABLE IN NEW. 3/4" CONDUIT
53	125VDC	2-1/C #12 AWG	BATTERY CHARGER	BATTERIES	PROVIDE CABLE IN NEW. 3/4" CONDUIT
54	125VDC	2-1/C #12 AWG	BATTERIES	DC DISC. SWITCH	PROVIDE CABLE IN NEW. 3/4" CONDUIT
55	125VDC	2-1/C #12 AWG	DC DISCONNECT SWITCH	PANEL DC	PROVIDE CABLE IN NEW. 3/4" CONDUIT
56	125VDC	2-1/C #6, #10 G	DC PANEL	SW. STATION 1001/7	PROVIDE CABLE IN NEW 1" CONDUIT
57	125VDC	2-1/C #10, #10 G	DC PANEL	SW. STATION 1001/7	PROVIDE CABLE IN NEW 1" CONDUIT
58	125VDC	2-1/C #10, #10 G	DC PANEL	BREAKER TEST SET	PROVIDE CABLE IN NEW 1" CONDUIT
73	13.8KV	3-1/C #4/0 EPR W/#4/0 FULL CONC NEUT	VFI-1002-1B/V3	T1050B	PROVIDE CABLE IN EXIST. CONDUIT B
74	13.8KV	3-1/C #4/0 EPR W/#4/0 FULL CONC NEUT	VFI-1002-2B/V3	T1050A	PROVIDE CABLE IN EXIST. CONDUIT B
77	480V	5 SETS 4-1/C 600kcmil, #4/0G	T1050A	ECS SWGR 1050A	PROVIDE CABLE IN NEW 4" CONDUITS
78	480V	5 SETS 4-1/C 600kcmil, #4/0G	T1050B	ECS SWGR 1050B	PROVIDE CABLE IN NEW 4" CONDUITS
96	480V	3-1/C #4/0, #4G	ECS SWGR 1050A	LPAC BLOWER #1 STARTER	PROVIDE CABLE IN NEW 2" CONDUIT
97	480V	3-1/C #4/0, #4G	ECS SWGR 1050B	LPAC BLOWER #2 STARTER	PROVIDE CABLE IN NEW 2" CONDUIT
99	KCCS	3 CAT 5E	SWGR 1050B	ECS COMM. ENCLOSURE	PROVIDE CABLE IN NEW 1" CONDUIT
100	KCCS	3 CAT 5E	SWGR 1050A	ECS COMM. ENCLOSURE	PROVIDE CABLE IN NEW 1" CONDUIT
101	KCCS		ECS COMM. ENCLOSURE	COMM. ENCLOSURE	PROVIDE PULL STRING IN NEW 1" CONDUIT
102	KCCS		SW. STATION 1001/5	COMM ENCLOSURE	PROVIDE PULL STRING IN NEW 1" CONDUIT
103	120V	2-1/C #12G, #18	ECS. COMM. ENCLOSURE	PANEL UPSECS	PROVIDE CABLE IN NEW 1" CONDUIT
105	KCCS	2 PAIRS OF TWISTED, SHIELDED #18 CABLE	BATTERY CHARGER	SW. STATION 1001/5	PROVIDE CABLE IN NEW 1" CONDUIT
106	KCCS	2 PAIRS OF TWISTED, SHIELDED #18 CABLE	IN PCV-4	SW. STATION 1001/5	PROVIDE CABLE IN NEW 1" CONDUIT
132	120V	2-1/C #12, #12G	PANEL ECSUPS	ECS SWGR 1050A UPS LOADS	PROVIDE CABLE IN NEW 3/4" CONDUIT
133	120V	2-1/C #12, #12G	PANEL ECSUPS	ECS SWGR 1050B UPS LOADS	PROVIDE CABLE IN NEW 3/4" CONDUIT
135	480V	3 SETS 3-1/C 600KCMIL, #4/0G	ECS SWGR 1050B/2C	ATS-128 (NORM)	PROVIDE CABLE IN NEW 4" CONDUIT & WIREWAY
136	480V	3 SETS 3-1/C 600KCMIL, #4/0G	ECS SWGR 1050A/2C	ATS-128 (ALT)	PROVIDE CABLE IN NEW 4" CONDUIT & WIREWAY
137	480V	3 SETS 3-1/C 600KCMIL, #4/0G	ATS-128 (LOAD)	PANEL ECS	PROVIDE CABLE IN NEW 4" CONDUIT & WIREWAY
138	KCCS	CAT 5E CABLE	ATS-128	ECS SWGR 1050B	PROVIDE CABLE IN NEW 3/4" CONDUIT & EXISTING CABLE TRAY TO ETHERNET HUB
141	KCCS	1-8/C #16	ATS-128	ECS SWGR 1050B	PROVIDE CABLE IN NEW 1-1/4" CONDUIT
142	KCCS	1-8/C #16	PNL ECS	ECS SWGR 1050A	PROVIDE CABLE IN NEW 1-1/4" CONDUIT
143	480V	3-1/C #8, #10G	PNL ECS/3	MCC-A/B4	PROVIDE CABLE IN NEW 3/4" CONDUIT

E

D

CABLE 141	BASE COLOR	TRACER	ATS 128	SWGR 1050B IOC44 CARD TERMINAL
1	BLACK	–	ATS-128 33A CONTACTS	F
2	RED	–		S1
3	BLUE	–	ATS-128 33A CONTACTS	F
4	ORANGE	–		S2
5	YELLOW	–	–	–
6	BROWN	–	–	–
7	RED	BLACK	–	–
8	BLUE	BLACK	–	–

CABLE 142	BASE COLOR	TRACER	PANEL ECS	SWGR 1050A IOC44 CARD TERMINAL
1	BLACK	–	CKT 27 52A CONTACTS	F
2	RED	–		S1
3	BLUE	–	CKT 33 52A CONTACTS	F
4	ORANGE	–		S2
5	YELLOW	–	–	–
6	BROWN	–	–	–
7	RED	BLACK	–	–
8	BLUE	BLACK	–	–

SWITCHGEAR 1050A, 1050B & ATS-128 AUXILIARY CONTACTS
CONDUCTOR CONNECTIONS & COLOR CODING – DETAIL

SPECIFIC NOTES:

A. FOR LEGEND AND GENERAL NOTES, SEE DRAWING E1.

B. PROVIDE CABLE TAGS ON NEW 15KV CABLES AS INDICATED. SEE DETAIL P

C. RETERMINATE EXISTING CABLE IN NEW EQUIPMENT. IF THE CABLE IS TOO SHORT TO RETERMINATE, THE CONTRACTOR SHALL PROVIDE SPLICE TO EXISTING CABLE IN PCV-4

D. PROVIDE BELDEN CABLE TYPE 27616A OR APPROVED EQUAL.

E. PROVIDE 12"x12" WIREWAY FOR NEW CONDUCTORS. ORIENT WIREWAY SO TOP IS REMOVABLE.

F. CONNECT TO 83 RELAY THROW OVER CKT. PROVIDE TERMINAL STRIPS AS REQUIRED.

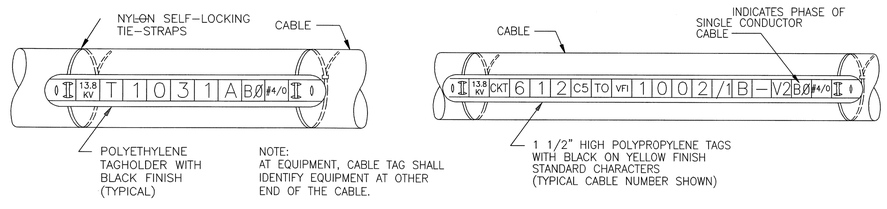

AT EQUIPMENT

FOR MANHOLES & CABLE VAULTS

CIRCUIT IDENTIFICATION TAG DETAIL P

FOR NEW AND EXISTING 15 KV CABLE

E19
E20

SYM.	ZONE	DESCRIPTION	DATE	APPROVED
		REVISIONS		

FRED WILSON & ASSOCIATES, INC
ENGINEERS
C. A. NO. 7188
FW&A
3970 HENDRICKS AVENUE
JACKSONVILLE, FL 32207

SIGNATURES		DATE
DESIGNED	D. TRANG	05/2009
DRAWN	B. PEARCE	05/2009
CHECKED		
SUBMITTED		9/25/09
APPROVED		9/25/09
APPROVED		
APPROVED		
APPROVED		
APPROVED		
APPROVED		

NATIONAL AERONAUTICS AND SPACE ADMINISTRATION
JOHN F. KENNEDY SPACE CENTER, NASA
KENNEDY SPACE CENTER, FLORIDA

REPLACE PAD B SWITCHGEARS

NEW CONDUIT AND CABLE SCHEDULE
SHEET 1

FILE NO.	SIZE	DWG. NO.
	F	79K38550
PROJ. NO. 98778		SHEET 22

E20

FILE: E20.DWG

THIS DRAWING PREPARED BY AutoCAD 2005

KSC FORM 1-11A (REV 6/91) (C/G 12/93)

NOTICE – WHEN GOVERNMENT DRAWINGS, SPECIFICATIONS, OR OTHER DATA ARE USED FOR ANY PURPOSE OTHER THAN IN CONNECTION WITH A DEFINITELY-RELATED GOVERNMENT PROCUREMENT OPERATION, THE UNITED STATES GOVERNMENT THEREBY INCURS NO RESPONSIBILITY NOR ANY OBLIGATION WHATSOEVER; AND THE FACT THAT THE GOVERNMENT MAY HAVE FORMULATED, FURNISHED, OR IN ANY WAY SUPPLIED THE SAID DRAWINGS, SPECIFICATIONS, OR OTHER DATA IS NOT TO BE REGARDED BY IMPLICATION OR OTHERWISE AS IN ANY MANNER LICENSING THE HOLDER OR ANY OTHER PERSON OR CORPORATION, OR CONVEYING ANY RIGHTS OR PERMISSION TO MANUFACTURE, USE, OR SELL ANY PATENTED INVENTION THAT MAY IN ANY WAY BE RELATED THERETO.

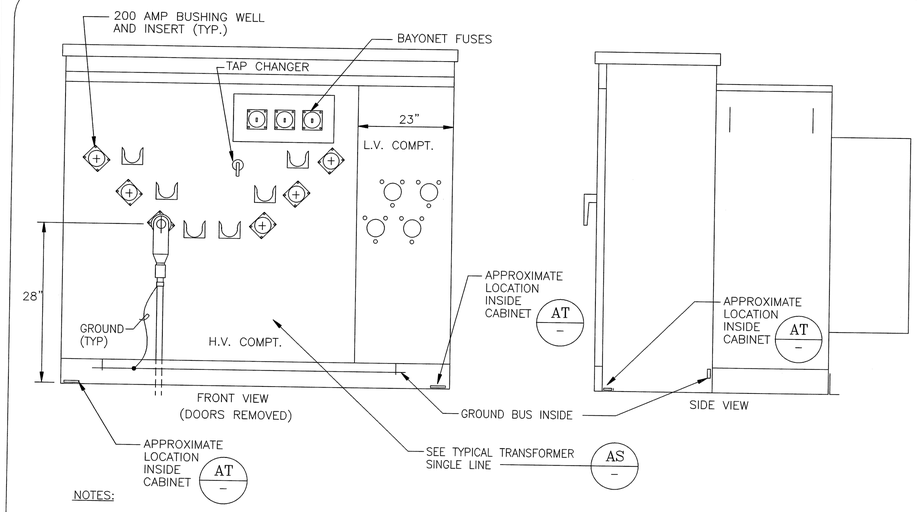

NOTES:

1. MINIMUM DIMENSIONS ARE SHOWN
2. ALL CONNECTIONS TO GROUND BUS SHALL BE MADE WITH SEPARATE BOLTED COMPRESSION LUGS.

3 PHASE PADMOUNTED TRANSFORMER DETAIL

NOT TO SCALE — BA / E12

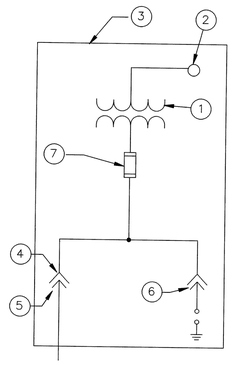

1. LIQUID INSULATED TRANSFORMER
2. LOW VOLTAGE BUSHINGS
3. SEE SPECS FOR ADDITIONAL DATA.
4. PROVIDE 6– 200 AMP BUSHING WELLS AND 6 – PARKING STANDS
5. PROVIDE 3– 200 AMP LOAD BREAK ELBOWS AND 3 STAND–OFF INSULATORS IN THE PARKING STANDS FOR THE INCOMING FEEDER. (AV / –)
6. PROVIDE 3– DEAD FRONT SURGE ARRESTERS.
7. 3 FUSE HOLDERS WITH BAYONET FUSES.

TYPICAL 3ø PADMOUNT TRANSFORMER SINGLE LINE

NOT TO SCALE — AS / –

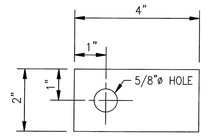

STAINLESS STEEL PLATE DETAIL

NOT TO SCALE — AU / –

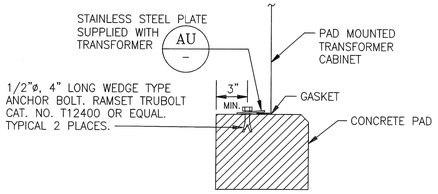

EQUIPMENT ANCHORING DETAIL

NOT TO SCALE — AT / –

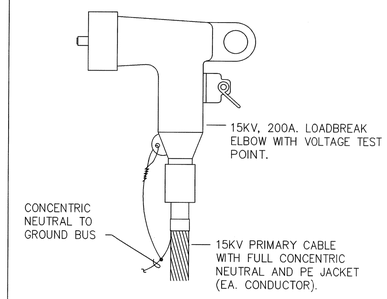

15KV, 200A. LOADBREAK ELBOW DETAIL

NOT TO SCALE — AV / –

VOLT :															
1 PHASE 100 AMPS ☒ SURFACE	2 WIRE ☐ MAIN BKR ☐ FLUSH	PANEL DC(SW STATION 1001)	☒ M.L.O	MANUFACTURER:	NEMA 1	FEEDER SIZE : 52 AIC RATING :10KA LOCATION :PAD B APRON FED FROM :BATTERY CHARGER									
NO.	POLE	TRIP	WIRE	GND	CND	PNL/CKT	SERVES	NO.	POLE	TRIP	WIRE	GND	CND	PNL/CKT	SERVES
1 3	2	60	56	–	–		SW. STATION 1001 BREAKER CONTROL	2 4	2	60	–	–	–		SPARE
5 7	2	30	57	–	–		RELAYS SW. STATION 1001	6 8	2	30	58	–	–		BREAKER TEST STATION
9	–	–	–	–	–		SPACE	10	–	–	–	–	–		SPACE
11	–	–	–	–	–		SPACE	12	–	–	–	–	–		SPACE
13	–	–	–	–	–		SPACE	14	–	–	–	–	–		SPACE

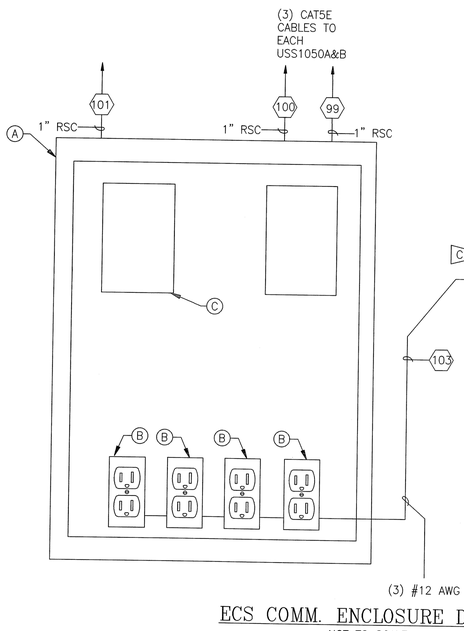

MATERIAL LIST		
ITEM	QTY	DESCRIPTION
A	1	NEMA 1 ENCLOSURE 16"x20"x6 1/2" HOFFMAN CAT #A–16N20ALP WITH BACK PANEL HOFFMAN CAT #A–16N20MP (OR APPROVED EQUAL)
B	4	125V, 20A NEMA 5–20 DUPLEX RECEPTACLE, STANDARD BOX & COVER LABEL "HUBS/CONVERTERS"
C	2	ETHERNET SWITCH WITH SINGLE MODE FIBER CONNECTION N–TRON PART NO. 509FXE–ST–15 AND WALL ADAPTER POWER SUPPLY N–TRON PART NO. NTPS–24–WA–500

ECS COMM. ENCLOSURE DETAIL

NOT TO SCALE — A / E13

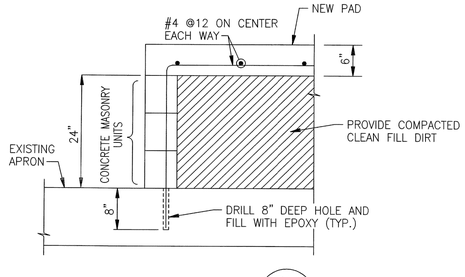

PAD SECTION

NOT TO SCALE — BU / E12

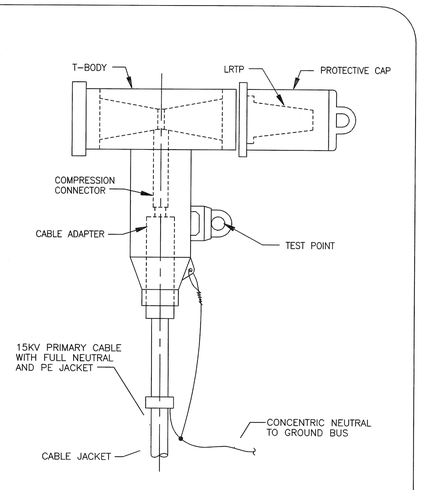

15KV, 600A. TERMINATOR ASSEMBLY

NOT TO SCALE — AW / –

NOTES:

A. FOR GENERAL NOTES AND LEGEND SEE DRAWING V2.

B. SEE DRAWING E20 FOR CABLE SCHEDULE.

SPECIFIC NOTES

A. FOR LEGEND AND GENERAL NOTES, SEE DRAWING E1

B. CONTRACTOR SHALL CONNECT NEW GROUND LOOP TO EXISTING PAD COUNTERPOISE.

C. INSTALL 1 POLE 20A CIRCUIT BREAKER IN PANEL UPSECS, CKT 7

SYM.	ZONE	DESCRIPTION	DATE	APPROVED
		REVISIONS		

FRED WILSON & ASSOCIATES, INC ENGINEERS
FW&A
C. A. NO. 7188
3970 HENDRICKS AVENUE
JACKSONVILLE, FL 32207

SIGNATURES		DATE
DESIGNED	D. TRANG	05/2009
DRAWN	B. PEARCE	05/2009
CHECKED		
SUBMITTED		9/24/09
APPROVED		9/28/09
APPROVED		
APPROVED		
APPROVED		
APPROVED		
APPROVED		

NATIONAL AERONAUTICS AND SPACE ADMINISTRATION
JOHN F. KENNEDY SPACE CENTER, NASA
KENNEDY SPACE CENTER, FLORIDA

REPLACE PAD B SWITCHGEARS

MISCELLANEOUS DETAILS
SHEET 1

FILE NO. | SIZE F | DWG. NO. 79K38550
PROJ. NO. 98778 | SHEET 23

E21

FILE: E21.DWG

THIS DRAWING PREPARED BY AutoCAD 2005

KSC FORM 1–11A (REV 6/91) (C/G 12/93)

NOTICE – WHEN GOVERNMENT DRAWINGS, SPECIFICATIONS, OR OTHER DATA ARE USED FOR ANY PURPOSE OTHER THAN IN CONNECTION WITH A DEFINITELY RELATED GOVERNMENT PROCUREMENT OPERATION, THE UNITED STATES GOVERNMENT THEREBY INCURS NO RESPONSIBILITY NOR ANY OBLIGATION WHATSOEVER; AND THE FACT THAT THE GOVERNMENT MAY HAVE FORMULATED, FURNISHED, OR IN ANY WAY SUPPLIED THE SAID DRAWINGS, SPECIFICATIONS, OR OTHER DATA IS NOT TO BE REGARDED BY IMPLICATION OR OTHERWISE AS IN ANY MANNER LICENSING THE HOLDER OR ANY OTHER PERSON OR CORPORATION, OR CONVEYING ANY RIGHTS OR PERMISSION TO MANUFACTURE, USE, OR SELL ANY PATENTED INVENTION THAT MAY IN ANY WAY BE RELATED THERETO.

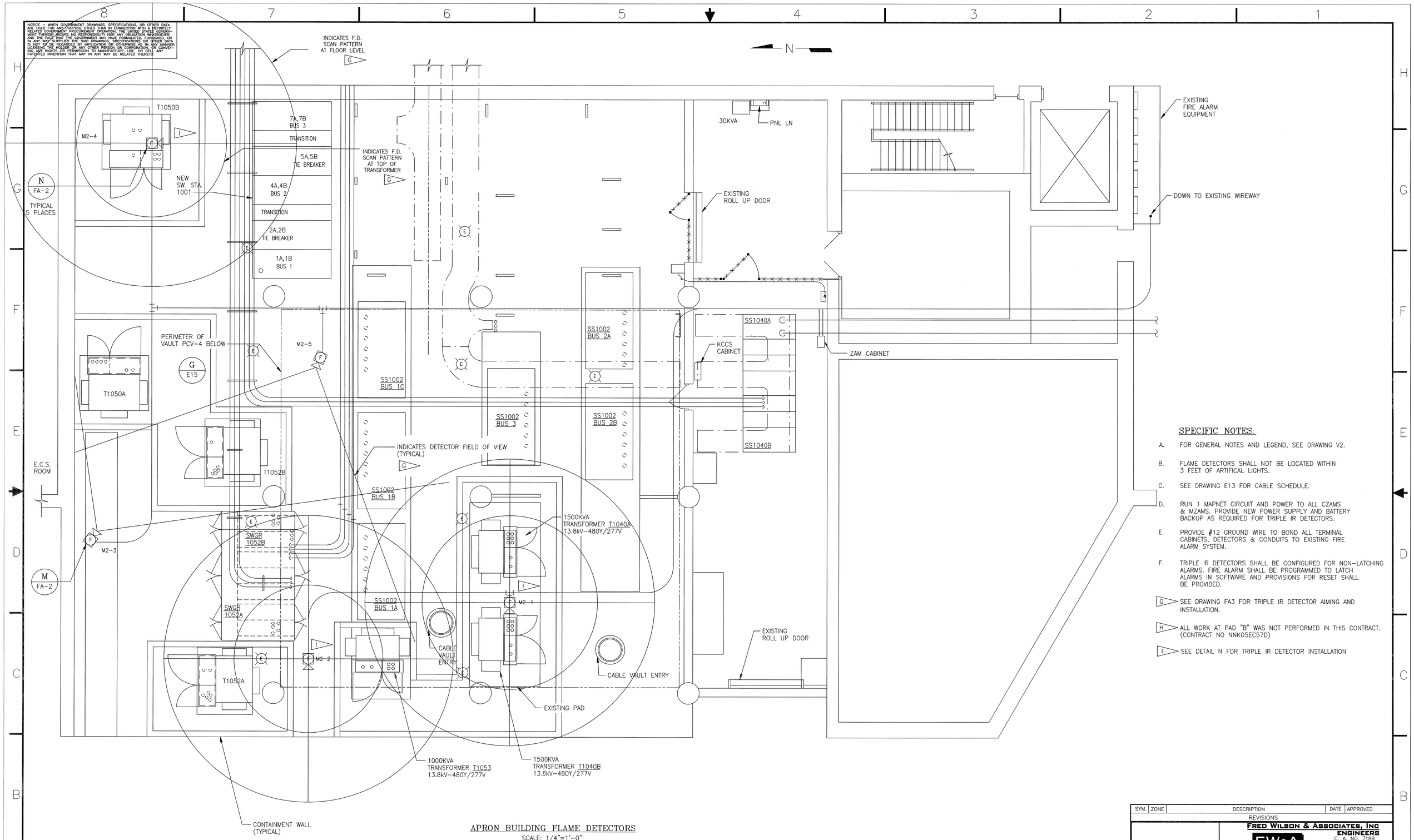

APRON BUILDING FLAME DETECTORS

SCALE: 1/4"=1'–0"

H

SPECIFIC NOTES:

A. FOR GENERAL NOTES AND LEGEND, SEE DRAWING V2.

B. FLAME DETECTORS SHALL NOT BE LOCATED WITHIN 3 FEET OF ARTIFICAL LIGHTS.

C. SEE DRAWING E13 FOR CABLE SCHEDULE.

D. RUN 1 MAPNET CIRCUIT AND POWER TO ALL CZAMS & MZAMS. PROVIDE NEW POWER SUPPLY AND BATTERY BACKUP AS REQUIRED FOR TRIPLE IR DETECTORS.

E. PROVIDE #12 GROUND WIRE TO BOND ALL TERMINAL CABINETS, DETECTORS & CONDUITS TO EXISTING FIRE ALARM SYSTEM.

F. TRIPLE IR DETECTORS SHALL BE CONFIGURED FOR NON–LATCHING ALARMS. FIRE ALARM SHALL BE PROGRAMMED TO LATCH ALARMS IN SOFTWARE AND PROVISIONS FOR RESET SHALL BE PROVIDED.

G SEE DRAWING FA3 FOR TRIPLE IR DETECTOR AIMING AND INSTALLATION.

H ALL WORK AT PAD "B" WAS NOT PERFORMED IN THIS CONTRACT. (CONTRACT NO NNK05EC57D)

I SEE DETAIL N FOR TRIPLE IR DETECTOR INSTALLATION

GRAPHIC SCALE

1/4"= 1'– 0" 4' 0' 4' 8' 12'

FILE: FA1.DWG

THIS DRAWING PREPARED BY AutoCAD 2005

FA1

SYM.	ZONE	DESCRIPTION	DATE	APPROVED
		REVISIONS		

FRED WILSON & ASSOCIATES, INC
ENGINEERS
C. A. NO. 7188
FW&A
3970 HENDRICKS AVENUE
JACKSONVILLE, FL 32207

SIGNATURES		DATE
DESIGNED	D. TRANG	05/2009
DRAWN	B. PEARCE	05/2009
CHECKED		
SUBMITTED		9/8/09
APPROVED		9/8/09
APPROVED		
APPROVED		
APPROVED		
APPROVED		
APPROVED		

NATIONAL AERONAUTICS AND SPACE ADMINISTRATION
JOHN F. KENNEDY SPACE CENTER, NASA
KENNEDY SPACE CENTER, FLORIDA

REPLACE PAD B SWITCHGEARS

PAD B
APRON BUILDING FLAME DETECTORS

FILE NO.	SIZE	DWG. NO.
	F	79K38550
PROJ. NO. 98778		SHEET 24

KSC FORM 1–11A (REV 6/91) (C/G 12/93)

NOTICE — WHEN GOVERNMENT DRAWINGS, SPECIFICATIONS, OR OTHER DATA ARE USED FOR ANY PURPOSE OTHER THAN IN CONNECTION WITH A DEFINITELY RELATED GOVERNMENT PROCUREMENT OPERATION, THE UNITED STATES GOVERNMENT THEREBY INCURS NO RESPONSIBILITY NOR ANY OBLIGATION WHATSOEVER; AND THE FACT THAT THE GOVERNMENT MAY HAVE FORMULATED, FURNISHED, OR IN ANY WAY SUPPLIED THE SAID DRAWINGS, SPECIFICATIONS, OR OTHER DATA, IS NOT TO BE REGARDED BY IMPLICATION OR OTHERWISE AS IN ANY MANNER LICENSING THE HOLDER OR ANY OTHER PERSON OR CORPORATION, OR CONVEYING ANY RIGHTS OR PERMISSION TO MANUFACTURE, USE, OR SELL ANY PATENTED INVENTION THAT MAY IN ANY WAY BE RELATED THERETO.

INITIATING DEVICE SCHEDULE

LOCATION OF DEVICE (B) SEE PLAN FOR EXACT LOCATION	DEVICE ADDRESS (G) LOCAL MAPNET	DEVICE ADDRESS (E) 2120 ADDRESS	CONTROL ZAM TO INITIATE TEST	DIRECTION ANGLE (B) a	DIRECTION ANGLE (C) b	HEIGHT ABOVE FLOOR/ PLATFORM (IN INCHES) (B)	HEIGHT ABOVE FLOOR/ PLATFORM (IN INCHES) (D)	DESCRIPTION (AREA COVERED)
B APRON BLDG	M2-1		M_-02	90°	45°	204 IN		T1040A, T1040B
B APRON BLDG	M2-2		M_-02	90°	45°	204 IN		T1052A, T1053
B APRON BLDG	M2-3		M_-02	90°	45°	204 IN		T1050A, T1052B
B APRON BLDG	M2-4		M_-02	30°	45°	204 IN		T1050B
B APRON BLDG	M2-5		M_-02	30°	45°	204 IN		T1052B, T1053

(Y)

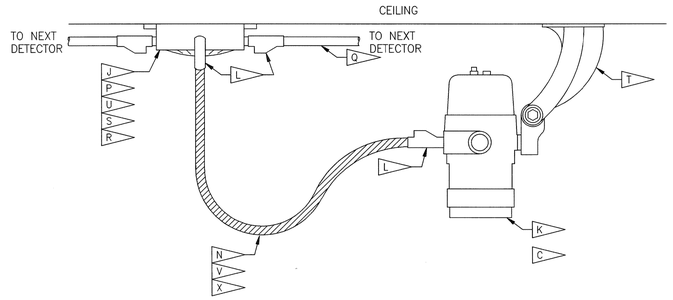

TRIPLE IR CEILING INSTALLATION DETAIL (N / FA1)

NOT TO SCALE

SPECIFIC NOTES:

A. FOR GENERAL NOTES AND LEGEND SEE DRAWING V2.

B. HEIGHT & AIMING ANGLE ARE FOR TRIPLE IR DETECTORS. MZAMS & CZAMS ARE LOCATED IN ASSIGNED FATC.

C. SEE AIMING KEY DETAIL, THIS SHEET.

D. VERIFY FINAL MOUNTING LOCATION, HEIGHTS, AND AIMING ANGLES WITH CONTRACTING OFFICER PRIOR TO INSTALLATION. CONTRACTOR SHALL AIM TRIPLE IR'S.

E. OBTAIN 41004 ADDRESSES FROM CONTRACTING OFFICER AT TIME OF CONSTRUCTION AND ADD TO AS-BUILT DRAWINGS.

F. VERTICAL ANGLE IS DOWNWARD UNLESSS INDICATED AS UP.

G. VERIFY MAPNET ADDRESSES WITH CONTRACTING OFFICER PRIOR TO INSTALLATION.

H. TRIPLE IR SHALL HAVE BEEN TESTED FOR MINERAL OIL FIRES.

J. PROVIDE NEMA 4X FIRE ALARM JUNCTION BOXES AND TRIPLE IR DETECTORS

K. TRIPLE IR DETECTOR TO BE MOUNTED ON SWIVEL BASE.

L. PROVIDE CONDUIT SEALS AT CONDUIT ENTRY TO JUNCTION BOX.

M. MONITOR AND CONTROL ZAMS TO BE MOUNTED IN CABINET.

N. PROVIDE FLEXIBLE METAL CONDUIT

P. JUNCTION BOX MAY BE MOUNTED BELOW OR BESIDE TRIPLE IR DETECTOR. WHERE EXISTING COMPONENTS INTERFERE WITH MOUNTING LOCATION, MOUNT JUNCTION BOX NO MORE THAN 6-FEET FROM IR DETECTOR. COORDINATE MOUNTING LOCATION WITH CONTRACTING OFFICER.

Q. PROVIDE 1" RIGID METAL CONDUIT AND STANDARD FITTINGS.

R. PROVIDE FIRE ALARM TERMINAL BLOCKS PROPERLY MOUNTED INSIDE ENCLOSURE TO TRANSITION FROM SOLID WIRE TO STRANDED WIRE.

S. PAINT FIRE ALARM JUNCTION BOXES PER KSC-STD-C-0001D.

T. DRILL INTO WALL OR CEILING AND MOUNT SWIVEL BASE WITH STAINLESS STEEL BOLTS.

U. APPLY LITHIUM BASED, ANTI GALLING LUBRICANT ON THREADS IN COVER TO PREVENT CORROSION AND SEIZING OF ENCLOSURE COVER.

V. RUN STRANDED #12 MINIMUM ONLY FOR 24VDC POWER BETWEEN FIXED STRUCTURE AND ROTATING STRUCTURE.

W. PROVIDE DRAINS ON CONDUIT SEALS AT LOWEST POINT ON CONDUIT RUNS.

X. PROVIDE A CONDENSATE LOOP A MINIMUM OF 12 INCHES BELOW TRIPLE IR DETECTOR CONDUIT ENTRY.

Y. ALL WORK AT PAD "B" TO BE PERFORMED ON THIS PROJECT

Z. PROVIDE MINIMUM 2 INCH WIRING SPACE AROUND THE ZAM CABINET PERIMETER

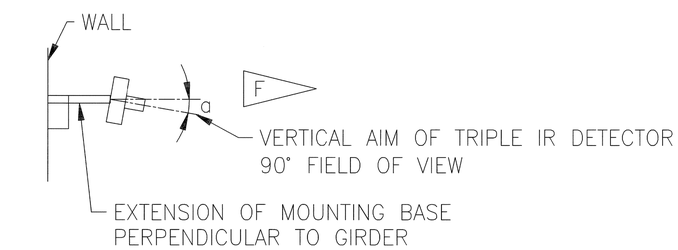

ELEVATION

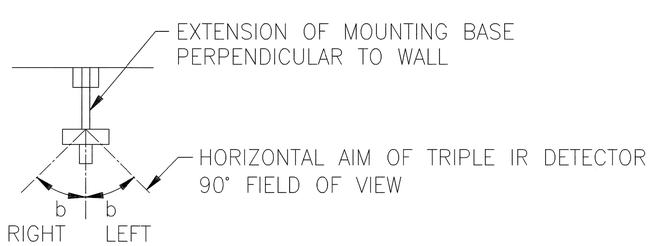

PLAN

AIMING KEY DETAIL (M / FA1)

NOT TO SCALE

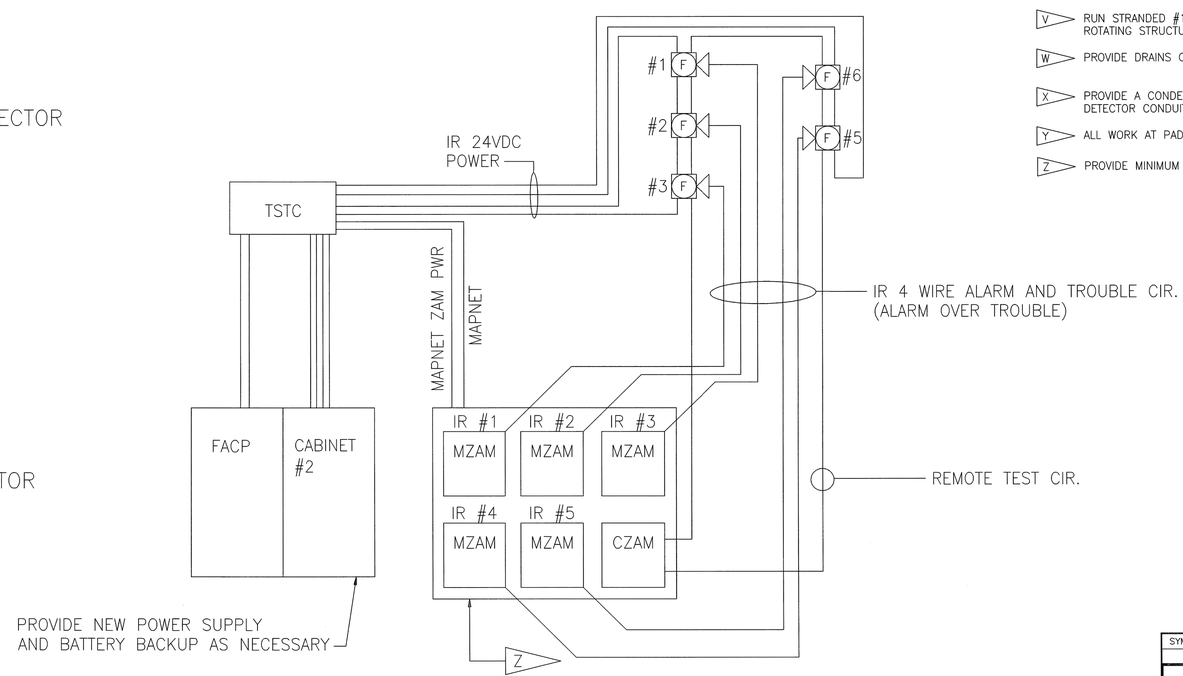

MODIFIED FIRE ALARM RISER DIAGRAM PAD B

NOT TO SCALE

SYM.	ZONE	DESCRIPTION	DATE	APPROVED

REVISIONS

FRED WILSON & ASSOCIATES, INC ENGINEERS
FW&A
C. A. NO. 7188
3570 HENDRICKS AVENUE
JACKSONVILLE, FL 32207

SIGNATURES		DATE
DESIGNED	D. TRANG	05/2009
DRAWN	B. PEARCE	05/2009
CHECKED		
SUBMITTED		9/24/09
APPROVED		9/24/09
APPROVED		
APPROVED		
APPROVED		
APPROVED		
APPROVED		

NATIONAL AERONAUTICS AND SPACE ADMINISTRATION
JOHN F. KENNEDY SPACE CENTER, NASA
KENNEDY SPACE CENTER, FLORIDA

REPLACE PAD B SWITCHGEARS

FIRE PROTECTION DETAILS

FA2

FILE NO.	SIZE	DWG. NO.
	F	79K38550
PROJ. NO. 98778		SHEET 25 OF 25

FILE: FA2.DWG

THIS DRAWING PREPARED BY AutoCAD 2005

KSC FORM 1-11A (REV 6/91) (C/G 12/93)