NOTICE – WHEN GOVERNMENT DRAWINGS, SPECIFICATIONS, OR OTHER DATA ARE USED FOR ANY PURPOSE OTHER THAN IN CONNECTION WITH A DEFINITELY RELATED GOVERNMENT PROCUREMENT OPERATION, THE UNITED STATES GOVERNMENT THEREBY INCURS NO RESPONSIBILITY NOR ANY OBLIGATION WHATSOEVER; AND THE FACT THAT THE GOVERNMENT MAY HAVE FORMULATED, FURNISHED, OR IN ANY WAY SUPPLIED THE SAID DRAWINGS, SPECIFICATIONS OR OTHER DATA IS NOT TO BE REGARDED BY IMPLICATION OR OTHERWISE AS IN ANY MANNER LICENSING THE HOLDER OR ANY OTHER PERSON OR CORPORATION, OR CONVEYING ANY RIGHTS OR PERMISSION TO MANUFACTURE, USE, OR SELL ANY PATENTED INVENTION THAT MAY IN ANY WAY BE RELATED THERETO.

# NATIONAL AERONAUTICS AND SPACE ADMINISTRATION
# JOHN F. KENNEDY SPACE CENTER
# REPLACE FEEDERS AND DUCTS, PADS A AND B

## PCN – 98778

### INDEX OF DRAWINGS


| DWG. NO. | SHEET NO. | REVISION | TITLE |
|---|---|---|---|
| V1 | 1 | A | VICINITY MAP, LOCATION MAP AND INDEX OF DRAWINGS |
| V2 | 2 | A | GENERAL NOTES AND LEGEND |
| E1 | 3 | A | PAD A SINGLE LINE DIAGRAM – EXISTING |
| E2 | 4 | A | PAD A SINGLE LINE DIAGRAM – MODIFIED |
| E3 | 5 | A | PAD B SINGLE LINE DIAGRAM – EXISTING |
| E4 | 6 | A | PAD B SINGLE LINE DIAGRAM – MODIFIED |
| E5 | 7 | A | SITE PLAN – PAD A |
| E6 | 8 | A | SITE PLAN – PAD B |
| E7 | 9 | A | MANHOLE LAYOUTS PAD A – SHEET 1 |
| E8 | 10 | A | MANHOLE LAYOUTS PAD A – SHEET 2 |
| E9 | 11 | A | MANHOLE LAYOUTS PAD A – SHEET 3 |
| E10 | 12 | A | MANHOLE LAYOUTS PAD A – SHEET 4 |
| E11 | 13 | A | MANHOLE LAYOUTS PAD B – SHEET 1 |
| E12 | 14 | A | MANHOLE LAYOUTS PAD B – SHEET 2 |
| E13 | 15 | A | MANHOLE LAYOUTS PAD B – SHEET 3 |
| E14 | 16 | A | MANHOLE LAYOUTS PAD B – SHEET 4 |
| E15 | 17 | A | MISCELLANEOUS DETAILS – SHEET 1 |
| E16 | 18 | A | CABLE SCHEDULE – EXISTING AND MODIFIED |


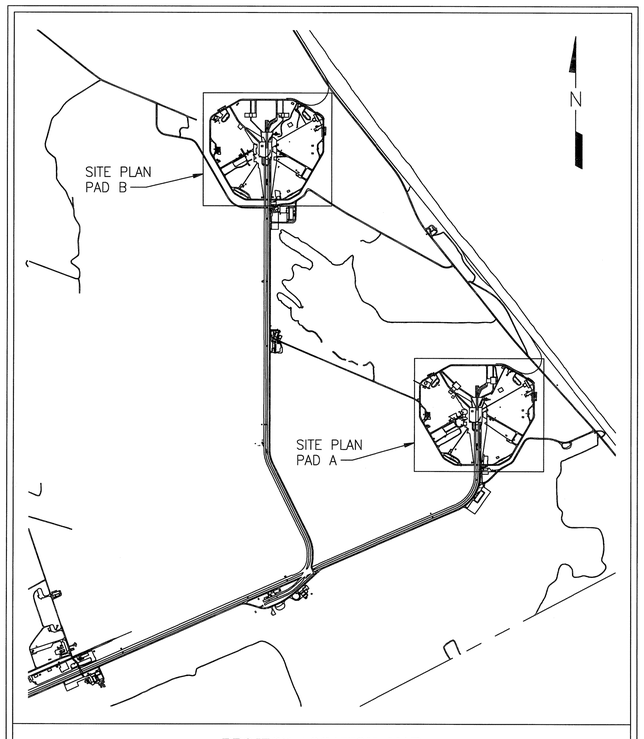


PROJECT LOCATION MAP

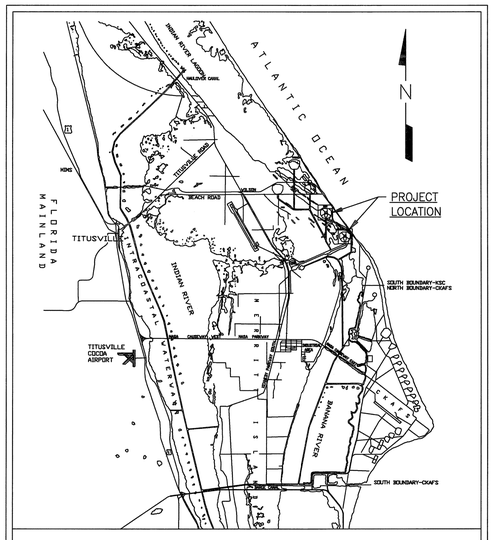


VICINITY MAP

### CONDUIT EQUIVALENTS

FROM NEC TABLE 300.1(C)

| METRIC DESIGNATOR | TRADE SIZE | METRIC DESIGNATOR | TRADE SIZE |
|---|---|---|---|
| 12 | 3/8 | 63 | 2 1/2 |
| 16 | 1/2 | 78 | 3 |
| 21 | 3/4 | 91 | 3 1/2 |
| 27 | 1 | 103 | 4 |
| 35 | 1 1/4 | 127 | 5 |
| 41 | 1 1/2 | 155 | 6 |
| 53 | 2 | | |

NOTE: THE METRIC DESIGNATORS AND TRADE SIZES ARE FOR IDENTIFICATION PURPOSES ONLY AND ARE NOT ACTUAL DIMENSIONS

THIS IS A METRIC PROJECT

PROVIDE SHALL MEAN FURNISH AND INSTALL
TECHNICAL SPECIFICATION– 79K38549

**SENSITIVE BUT UNCLASSIFIED (SBU)**
Instructions: This item must be reviewed under the requirements for "Sensitive But Unclassified Information" as described in NPR 1600.1 Material that is export-sensitive is automatically considered to contain SBU and does not require an SBU Reviewer signature. Material that is not export-sensitive must be reviewed for SBU as required per NASA Form 1686.

| | Yes | No | SBU Reviewer's Signature | Date |
|---|---|---|---|---|
| Contains SBU? | ☐ | ☑ | Ernesto T. Camacho | 9/29/09 |

**EXPORT CONTROL (EC)**
Instructions: Once it is determined the document includes EC data, contact the KSC ECO Help Desk at 867-9209 (or your directorate Export Control Rep) for a determination of the proper export category.

*NOTE: If the document does not contain export-controlled technical data, it is considered EAR 99 NLR (No License Required) under the Export Administration Regulations of the Department of Commerce.*

| ECO Reviewer's Name and Organization | ECO Reviewer's Signature | Date |
|---|---|---|
| Ernesto T. Camacho, TA-538 | Ernesto T. Camacho | 9/29/09 |

| | Determination (Check Only One Box) and Category | |
|---|---|---|
| EAR 99 NLR (No EC) | ☑ EAR 99 NLR | The information contained in the document is technical in content, but not technical data as defined by the ITAR or the EAR and therefore is EAR 99 NLR (no export license required.) (General Prohibition Six (Embargo) applies to all items subject to the EAR, i.e. items on the CCL and within EAR 99 NLR. You may not make an export or re-export contrary to the provisions of part 746 (Embargos and Other Special Controls) of the EAR and 22 CFR part 126.1 of the ITAR) |
| EAR Controlled | ☐ | This document is within the purview of the Export Administration Regulations (EAR), 15 CFR 730–774, and is export controlled. It may not be transferred to foreign nationals in the U.S. or abroad without specific approval of a knowledgeable NASA export control official, and/or unless an export license or license exception is obtained/available from Bureau of Industry and Security, United States Department of Commerce. Violations of these regulations are punishable by fine, imprisonment, or both. |
| ITAR Controlled | ☐ | This document contains information which falls under the purview of the U.S. Munitions List (USML), as defined in the International Traffic in Arms Regulations (ITAR), 22 CFR 120–130, and is export controlled. It shall not be transferred to foreign nationals, in the U.S. or abroad, without specific approval of a knowledgeable NASA export control official, and/or unless an export license or license exemption is obtained/available from the United States Department of State. *Violations of these regulations are punishable by fine, imprisonment, or both.* |

FILE: COVER REV A.DWG
THIS DRAWING PREPARED BY AutoCAD 2005

V1

| SYM. | ZONE | DESCRIPTION | DATE | APPROVED |
|---|---|---|---|---|
| A | | REVISED SHEETS 1–18, M. B. P. | 09/09 | |

ALBERT ROSE 60649
Fred Wilson & Associates, Inc.
Consulting Engineers
C.A. NO. 7188 • 904-398-8636
3970 Hendricks Avenue • Jacksonville, FL 32207

| SIGNATURES | | DATE |
|---|---|---|
| DESIGNED | V.R.K. | 03/06 |
| DRAWN | R.M.L. | 03/06 |
| CHECKED | A.M.R. | 03/06 |
| SUBMITTED | | 9/29/09 |
| APPROVED | | 9/29/09 |
| APPROVED | | 9/29/09 |
| APPROVED | | |
| APPROVED | | |
| APPROVED | | |
| APPROVED | | |

NATIONAL AERONAUTICS AND SPACE ADMINISTRATION
JOHN F. KENNEDY SPACE CENTER, NASA
KENNEDY SPACE CENTER, FLORIDA

REPLACE PAD FEEDERS AND DUCTS
PADS A AND B

VICINITY MAP, LOCATION MAP AND
INDEX OF DRAWINGS

| FILE NO. | SIZE | DWG. NO. | |
|---|---|---|---|
| | F | 79K36517 | A |
| PROJ. NO. PCN 97396 | | | SHEET 1 OF 18 |

KSC FORM 1–11A (REV 8/91) (C/G 12/93)

NOTICE – WHEN GOVERNMENT DRAWINGS, SPECIFICATIONS, OR OTHER DATA ARE USED FOR ANY PURPOSE OTHER THAN IN CONNECTION WITH A DEFINITELY RELATED GOVERNMENT PROCUREMENT OPERATION, THE UNITED STATES GOVERNMENT THEREBY INCURS NO RESPONSIBILITY NOR ANY OBLIGATION WHATSOEVER; AND THE FACT THAT THE GOVERNMENT MAY HAVE FORMULATED, FURNISHED, OR IN ANY WAY SUPPLIED THE SAID DRAWINGS, SPECIFICATIONS, OR OTHER DATA IS NOT TO BE REGARDED BY IMPLICATION OR OTHERWISE, IN ANY MANNER LICENSING THE HOLDER OR ANY OTHER PERSON OR CORPORATION, OR CONVEYING ANY RIGHTS OR PERMISSION TO MANUFACTURE, USE, OR SELL ANY PATENTED INVENTION THAT MAY IN ANY WAY BE RELATED THERETO.

## GENERAL NOTES

1. ALL ELECTRICAL WORK AND MATERIAL, UNLESS NOTED AS EXISTING OR GOVERNMENT FURNISHED, IS NEW AND SHALL BE PROVIDED BY THE CONTRACTOR.
2. UNLESS OTHERWISE INDICATED, PROVIDE SHALL MEAN TO FURNISH AND INSTALL.
3. THE CONTRACTOR SHALL EXERCISE CAUTION WHEN EXCAVATING. UNDERGROUND UTILITIES MAY EXIST WHICH ARE NOT INDICATED ON THE DRAWINGS. EXACT LOCATION OF BURIED UTILITIES SHALL BE NOTED BY THE CONTRACTOR ON "AS–BUILT" DRAWINGS.
4. THE CONTRACTOR SHALL EXERCISE EXTREME CAUTION DURING CABLE INSTALLATION AND SPLICING IN THE EXISTING MANHOLES. THE MANHOLES CONTAIN ENERGIZED CIRCUITS (13.8KV & 600V) THAT MUST REMAIN IN SERVICE. ANY REQUIRED OUTAGES SHALL BE COORDINATED WITH THE GOVERNMENT.
5. CONTRACTOR SHALL CONTACT THE CONTRACTING OFFICER PRIOR TO ALL HIGH POT TESTS OF CABLE.
6. 15KV CABLE SHALL NOT BE PUT ON THE GROUND AT ANY TIME DURING HANDLING OR INSTALLATION.
7. NO OUTAGES OF FACILITIES SHALL BE PERMITTED UNLESS APPROVED BY CONTRACTING OFFICER. CONTRACTOR SHALL NOTIFY CONTRACTING OFFICER 14 DAYS PRIOR TO DESIRED DATE FOR OUTAGE. FOR LOADS SERVED BY DOUBLE–ENDED SUBSTATIONS, ONLY ONE SET OF FEEDER CABLES SHALL BE REMOVED AT A TIME FROM SERVICE TO ACCOMPLISH THE REMOVAL AND REPLACEMENT OF THE FEEDER CABLES. THE AFFECTED LOADS WILL BE SERVED BY CLOSING THE TIE–BREAKER OF THE DOUBLE–ENDED SUBSTATION AND OPENING THE MAIN BREAKER OF THE INCOMING FEEDER CABLE THAT IS BEING REPLACED. CONTRACTING OFFICER AND JBOSC SHALL PROVIDE SWITCHING TO DIVERT POWER AND DE–ENERGIZE A FEEDER PRIOR TO REMOVAL OF ANY CABLE.
8. THE GOVERNMENT TO SUPPLY GENERATOR SUPPORT. CONTRACTOR SHALL NOTIFY CONTRACTING OFFICER 14 DAYS PRIOR TO DESIRED DAY FOR GENERATOR SUPPORT.
9. UNDERGROUND UTILITIES HAVE BEEN LOCATED BY REFERRING TO ALL KNOWN RECORD DRAWINGS, BY CONFERRING WITH PUBLIC WORKS PERSONNEL TOPOGRAPHIC SURVEY BY VISUAL OBSERVATIONS ALONG THE ROUTE AND BY THE USE OF UNDERGROUND LOCATORS. OTHER UNDERGROUND UTILITIES NOT FOUND OR SHOWN MAY BE PRESENT. THE LOCATIONS OF UTILITIES SHOWN ARE TO BE CONSIDERED APPROXIMATE ONLY, AND THE DRAWINGS SHALL NOT BE SCALED TO DETERMINE LOCATIONS. CONTRACTOR SHALL BE RESPONSIBLE FOR ALL UNDERGROUND UTILITIES INDICATED AND SHALL USE EXTREME CAUTION WHEN EXCAVATING.
10. UNLESS OTHERWISE INDICATED, ALL DIMENSIONS ARE IN MILLIMETERS.
11. AS A RESULT OF PAST CABLE REPLACEMENT PROJECTS, IT HAS BEEN DETERMINED THAT MANY OF THE PULLING EYES IN ELECTRICAL POWER MANHOLES ARE NO LONGER RELIABLE. CONTRACTOR SHALL USE ALTERNATIVE METHODS FOR REMOVING AND INSTALLING CABLE WHERE REQUIRED, PER SPECIFICATIONS.
12. WHEN EQUIPMENT IDENTIFICATION CHANGES, CONTRACTOR SHALL RETAG CABLES IN ALL MANHOLES IN THE CABLE ROUTE AND AT ALL EQUIPMENT. SEE CIRCUIT IDENTIFICATION TAG DETAIL R/V2.

## ABBREVIATIONS

| | | | |
|---|---|---|---|
| ABND | ABANDON | | |
| ACM | ASBESTOS CONTAINING MATERIAL | MCB | MAIN CIRCUIT BREAKER |
| AUX | AUXILIARY | MH | ELECTRICAL MANHOLE |
| AWG | AMERICAN WIRE GAUGE | N | NEUTRAL |
| BKR | BREAKER | NF | NON–FUSED |
| BLDG | BUILDING | OCB | OIL CIRCUIT BREAKER |
| BSD | BARE SOFT DRAWN | N.O. | NORMALLY OPEN |
| C, CND | CONDUIT | PILC (NJ) | PAPER INSULATED, LEAD COVERED (NEOPRENE JACKET) |
| CKT | CIRCUIT | POS | POSITION |
| CKT BKR | CIRCUIT BREAKER | PT | POTENTIAL TRANSFORMER |
| COMM | COMMUNICATIONS | PVC | POLYVINYL CHLORIDE |
| CT | CURRENT TRANSFORMER | PWR | POWER |
| CU | COPPER | SCH | SCHEDULE |
| DB | DIRECT BURIED | SECT. CAB. | SECTIONALIZING CABINET |
| DISC | DISCONNECT | SP | SPARE |
| DISTR | DISTRIBUTION | SS | SUBSTATION |
| DWG | DRAWING | STA | STATION |
| ELEC | ELECTRICAL | SUBSTA | SUBSTATION |
| EPR | ETHYLENE–PROPYLENE RUBBER | SUPV | SUPERVISORY |
| EXIST. | EXISTING | SW | SWITCH |
| FDR | FEEDER | SWGR | SWITCHGEAR |
| GEN | GENERATOR | SWMU | SOLID WASTE MANAGEMENT UNIT |
| G, GND | GROUND | TYP | TYPICAL |
| GALV | GALVANIZED | UG | UNDERGROUND |
| GRS | GALVANIZED RIGID STEEL | USS | UNIT SUBSTATION |
| HDPE | HIGH DENSITY POLYETHYLENE | V | VOLT |
| KCMIL,MCM | THOUSAND CIRCULAR MILS | VFI | VACUUM FAULT INTERRUPTER |
| KV | KILOVOLTS | XFMR | TRANSFORMER |
| KVA | KILOVOLT AMPERES | XLP | CROSS–LINKED POLYETHYLENE INSULATED |
| LBS | LOAD BREAK SWITCH | | |
| LOC | LAUNCH OPERATIONS CONTRACTOR | | |

## SINGLE LINE DIAGRAM LEGEND

- A — NOTE REFERENCE
- EXISTING 15KV CIRCUIT BREAKER
- EXISTING 15KV DRAWOUT CIRCUIT BREAKER
- EXISTING TRANSFORMER
- ELBOW TERMINATION
- EXISTING SWITCHGEAR BREAKER OR VACUUM FAULT INTERRUPTER
- NO — EXISTING DISCONNECT SWITCH (NORMALLY OPEN)
- EXISTING DISCONNECT SWITCH (NORMALLY CLOSED)
- EXISTING CONDUCTORS
- A — ABANDON CONDUCTORS
- PROVIDE CONDUCTORS
- R — REMOVE CONDUCTORS
- CABLE SPLICE FROM EXISTING TO NEW CONDUCTOR
- EXISTING FUSED SWITCH
- EXISTING FUSE
- EXISTING CABLE SPLICE IN JUNCTION BOX OR MANHOLE
- REMOVE CABLE SPLICE
- REMOVE TRIFURCATING SPLICE
- CUT CABLE IN MANHOLE
- LIVE END SPLICE
- SWITCH WAYS — 1 2 3 4 — EXISTING LOAD BREAK SWITCH WITH STUD BUSHINGS
- S1 S2 V1 V2 — EXISTING PAD MOUNT VFI WITH ELBOW TERMINATIONS
  2 – SWITCHED WAYS
  2 – VACUUM INTERRUPTERS (NO. VARIES)
- 3(A) — EXISTING CABLE (A) IS BEING REPLACED WITH NEW CABLE 3 OR HAVING ITS DESIGNATIONS CHANGED TO THAT OF CABLE 3
- CABLE DESIGNATION SEE CONDUIT AND CABLE SCHEDULE { *–NUMERIC NOTATION = NEW CABLE SCHEDULE; *–ALPHA NOTATION = EXISTING CABLE SCHEDULE }
- EXISTING MANHOLE
- EXISTING EQUIPMENT
- REMOVE EQUIPMENT
- PROVIDE EQUIPMENT
- HH — PROVIDE HANDHOLE

## PLAN LEGEND

- UE — EXISTING CONDUIT AND CABLE BELOW GRADE TO REMAIN
- UE — EXISTING CONDUIT BELOW GRADE TO REMAIN, REMOVE CONDUCTORS AS INDICATED
- UEN — PROVIDE UNDERGROUND DUCT
- EXISTING CABLE (MANHOLE DETAIL)
- R — REMOVE CABLE (MANHOLE DETAIL)
- PROVIDE CABLE (MANHOLE DETAIL)
- UE — PROVIDE CABLES IN EXISTING UNDERGROUND DUCT (REMOVE CABLES AS INDICATED)
- OE — EXISTING AERIAL CABLE
- RA — REMOVE CONDUCTORS, ABANDON CONDUIT
- A — ABANDONED DUCT
- DD — DIRECTIONAL DRILLED DUCT
- A — NOTE REFERENCE
- CABLE DESIGNATION, SEE CONDUIT AND CABLE SCHEDULE { *–ALPHA NOTATION = EXISTING CABLE SCHEDULE; *–NUMERIC NOTATION = NEW CABLE SCHEDULE }
- PROVIDE SPLICE
- EXISTING SPLICE
- REMOVE SPLICE
- EXISTING TRIFURCATING SPLICE
- REMOVE TRIFURCATING SPLICE
- MH 18A — EXISTING ELECTRICAL MANHOLE
- HH — EXISTING HANDHOLE
- HH — PROVIDE HANDHOLE
- EXISTING LOAD BREAK SWITCH (LBS) OR VACUUM FAULT INTERRUPTER (VFI)
- FRONT — EXISTING TRANSFORMER
- RR — EXISTING RAILROAD TRACKS
- X — EXISTING FENCE
- 3(A) — EXISTING CABLE (A) IS BEING REPLACED WITH NEW CABLE 3 OR HAVING ITS DESIGNATIONS CHANGED TO THAT OF CABLE 3
- EXISTING EQUIPMENT
- REMOVE EQUIPMENT
- PROVIDE EQUIPMENT
- DIRECTIONAL DRILLED DUCT SECTION

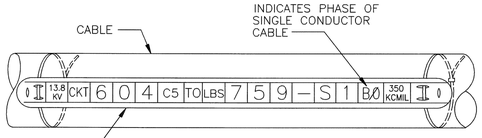


FOR MANHOLES & CABLE VAULTS

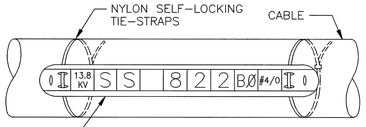


NOTE:
AT EQUIPMENT, CABLE TAG SHALL IDENTIFY EQUIPMENT AT OTHER END OF THE CABLE.

AT EQUIPMENT

## CIRCUIT IDENTIFICATION TAG DETAIL

FOR NEW AND EXISTING CABLE

R
E7
E8
E9
E10
E11
E12
E13
E14
E16

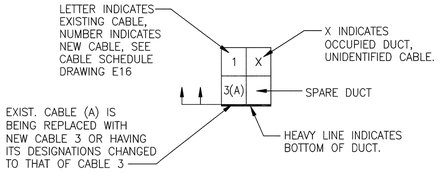


## DISTRIBUTION DUCTBANK SECTION LOOKING IN DIRECTION OF ARROWS

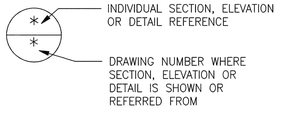


## DETAIL REFERENCE

FILE: LEGEND REV A.DWG
THIS DRAWING PREPARED BY AutoCAD 2008

V2

| SYM. | ZONE | DESCRIPTION | DATE | APPROVED |
|---|---|---|---|---|
| A | | REVISED SHEETS 1–18, M. B. P. | 09/09 | 9/09/09 |

Fred Wilson & Associates, Inc.
Consulting Engineers
C.A. NO. 7188 • 904-398-8636
3970 Hendricks Avenue • Jacksonville, FL 32207

| SIGNATURES | | DATE |
|---|---|---|
| DESIGNED | V.R.K. | 03/06 |
| DRAWN | R.M.L. | 03/06 |
| CHECKED | A.M.R. | 03/06 |
| SUBMITTED | | |
| APPROVED | | |
| APPROVED | | |
| APPROVED | | |
| APPROVED | | |
| APPROVED | | |
| APPROVED | | |

NATIONAL AERONAUTICS AND SPACE ADMINISTRATION
JOHN F. KENNEDY SPACE CENTER, NASA
KENNEDY SPACE CENTER, FLORIDA

REPLACE PAD FEEDERS AND DUCTS PADS A AND B

GENERAL NOTES AND LEGEND

| FILE NO. | SIZE | DWG. NO. | |
|---|---|---|---|
| | F | 79K36517 | A |
| PROJ. NO. PCN 97396 | | SHEET 2 | |

KSC FORM 1–11A (REV 6/91) (C/G 12/93)

NOTICE – WHEN GOVERNMENT DRAWINGS, SPECIFICATIONS, OR OTHER DATA ARE USED FOR ANY PURPOSE OTHER THAN IN CONNECTION WITH A DEFINITELY RELATED GOVERNMENT PROCUREMENT OPERATION, THE UNITED STATES GOVERNMENT THEREBY INCURS NO RESPONSIBILITY, NOR ANY OBLIGATION WHATSOEVER; AND THE FACT THAT THE GOVERNMENT MAY HAVE FORMULATED, FURNISHED, OR IN ANY WAY SUPPLIED THE SAID DRAWINGS, SPECIFICATIONS OR OTHER DATA IS NOT TO BE REGARDED BY IMPLICATION OR OTHERWISE AS IN ANY MANNER LICENSING THE HOLDER OR ANY OTHER PERSON OR CORPORATION, OR CONVEYING ANY RIGHTS OR PERMISSION TO MANUFACTURE, USE OR SELL ANY PATENTED INVENTION THAT MAY IN ANY WAY BE RELATED THERETO.

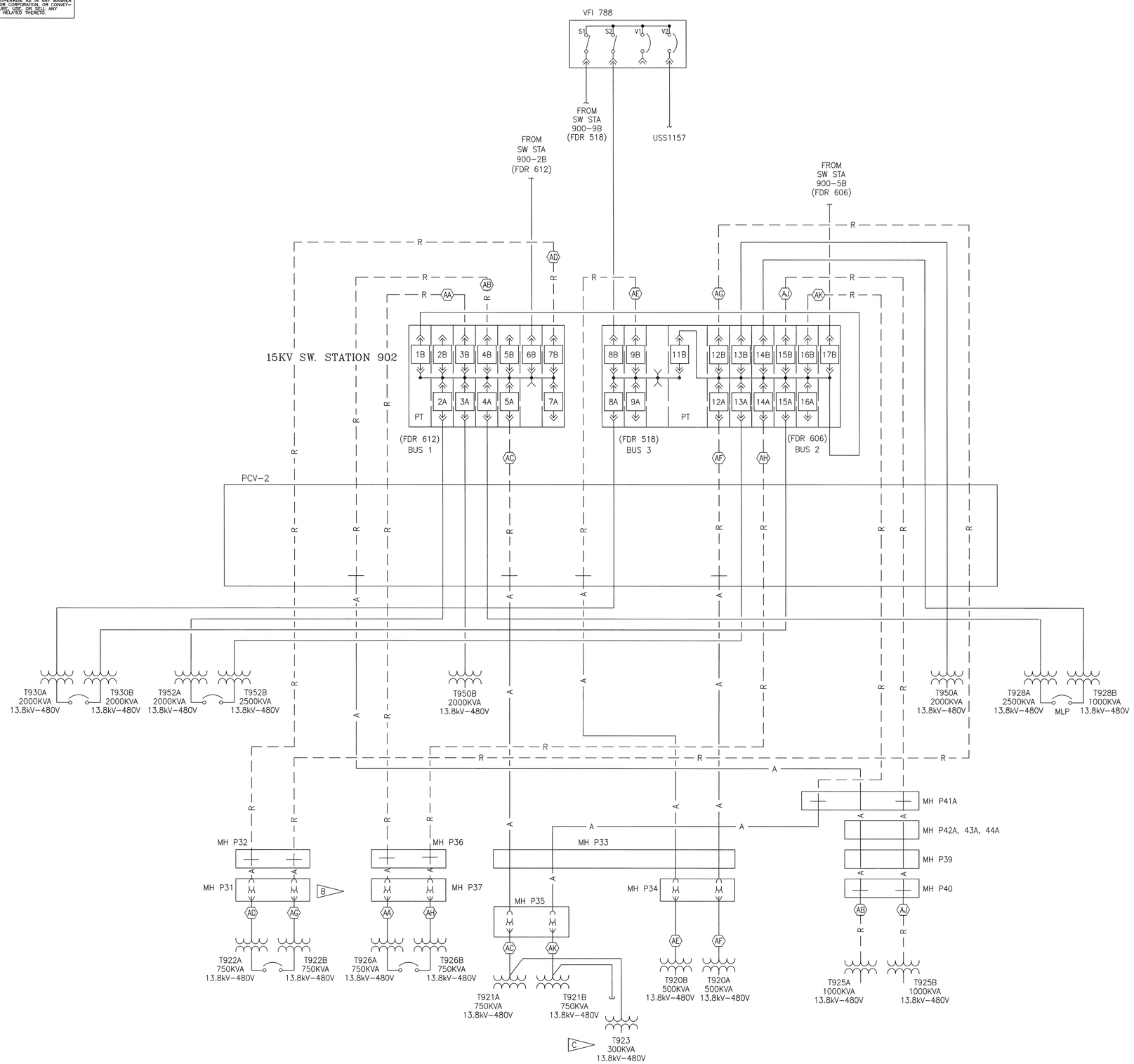


EXISTING SINGLE LINE

## SPECIFIC NOTES:

A. FOR GENERAL NOTES AND LEGEND, SEE DRAWING V2.

B. CABLES (AD) AND (AG) WAS REPLACED WITH EPR FROM T922 TO SPLICE IN MH P31 PER PCN 96681 DWG # 79K35915.

C. TIE BETWEEN T921B AND T923 IS OPEN. FEEDER IS ON PARKING STAND IN T923.

D. FOR EXISTING CABLE SCHEDULE, SEE DRAWING E16.

| SYM. | ZONE | DESCRIPTION | DATE | APPROVED |
|---|---|---|---|---|
| 2 | | REVISED SHEETS 1-18, M. B. P. | 09/09 | 9/29/09 |

Fred Wilson & Associates, Inc.
Consulting Engineers
C.A. NO. 7188 • 904-398-8636
3970 Hendricks Avenue • Jacksonville, FL 32207

| SIGNATURES | | DATE |
|---|---|---|
| DESIGNED | V.R.K. | 03/06 |
| DRAWN | R.M.L. | 03/06 |
| CHECKED | A.M.R. | 03/06 |
| SUBMITTED | | |
| APPROVED | | |
| APPROVED | | |
| APPROVED | | |
| APPROVED | | |
| APPROVED | | |
| APPROVED | | |

NATIONAL AERONAUTICS AND SPACE ADMINISTRATION
JOHN F. KENNEDY SPACE CENTER, NASA
KENNEDY SPACE CENTER, FLORIDA

REPLACE PAD FEEDERS AND DUCTS PADS A AND B

PAD A SINGLE LINE DIAGRAM EXISTING

FILE NO. | SIZE F | DWG. NO. 79K36517 | A

PROJ. NO. PCN 97396 | SHEET 3

FILE: PAD A 1-LINE REV A.DWG
THIS DRAWING PREPARED BY AutoCAD 2005

E1

KSC FORM 1-11A (REV 6/91) (C/G 12/93)

NOTICE – WHEN GOVERNMENT DRAWINGS, SPECIFICATIONS, OR OTHER DATA ARE USED FOR ANY PURPOSE OTHER THAN IN CONNECTION WITH A DEFINITELY RELATED GOVERNMENT PROCUREMENT OPERATION, THE UNITED STATES GOVERNMENT THEREBY INCURS NO RESPONSIBILITY NOR ANY OBLIGATION WHATSOEVER; AND THE FACT THAT THE GOVERNMENT MAY HAVE FORMULATED, FURNISHED, OR IN ANY WAY SUPPLIED THE SAID DRAWINGS, SPECIFICATIONS, OR OTHER DATA IS NOT TO BE REGARDED BY IMPLICATION OR OTHERWISE AS IN ANY MANNER LICENSING THE HOLDER OR ANY OTHER PERSON OR CORPORATION, OR CONVEYING ANY RIGHTS OR PERMISSION TO MANUFACTURE, USE, OR SELL ANY PATENTED INVENTION THAT MAY IN ANY WAY BE RELATED THERETO.

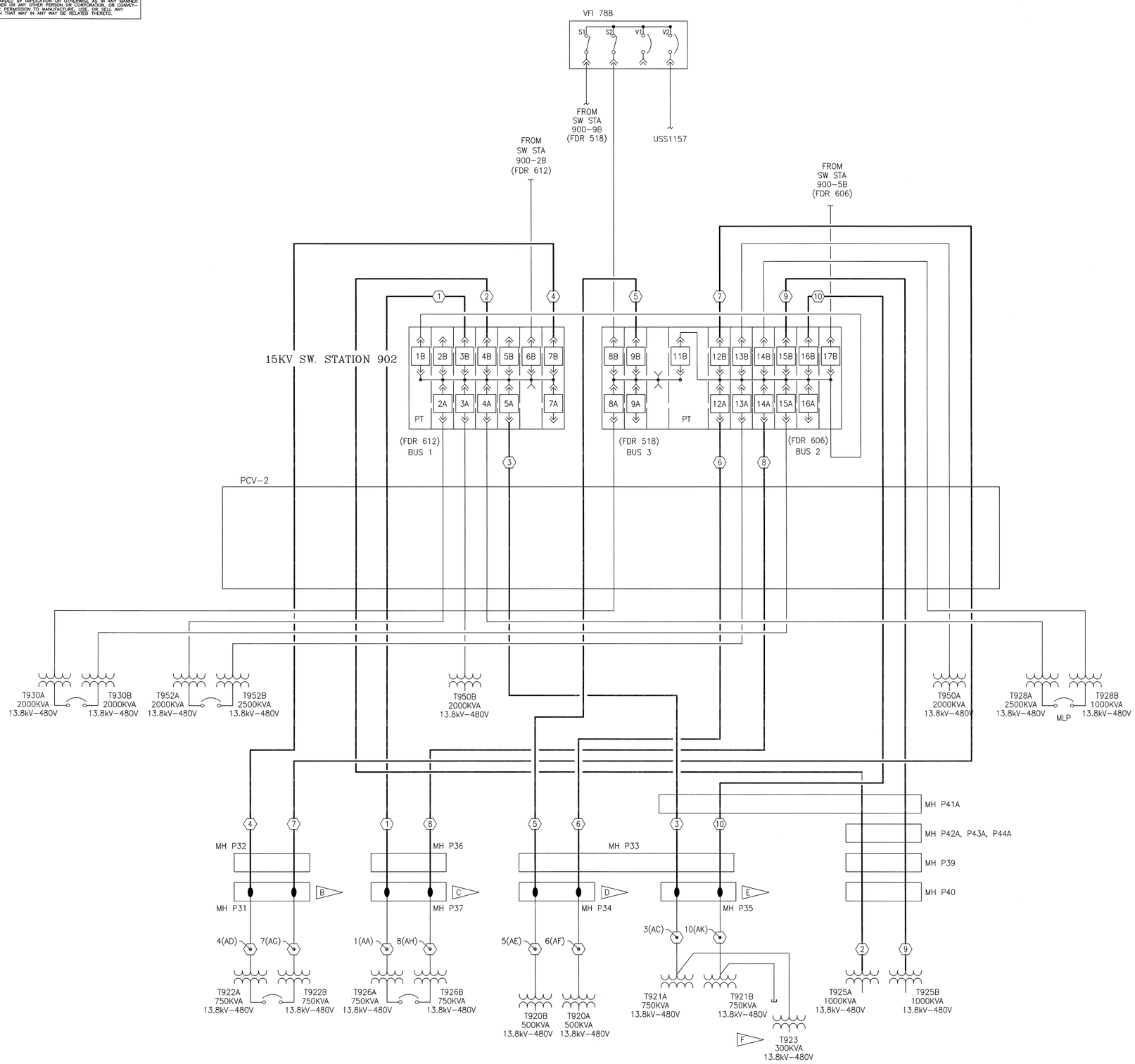


MODIFIED SINGLE LINE

## SPECIFIC NOTES:

A. FOR GENERAL NOTES AND LEGEND, SEE DRAWING V2.

B. SPLICE CABLE 4 TO CABLE AD AND CABLE 7 TO CABLE AG IN MH P31.

C. SPLICE CABLE 1 TO CABLE AA AND CABLE 8 TO CABLE AH IN MH P37.

D. SPLICE CABLE 5 TO CABLE AE AND CABLE 6 TO CABLE AF IN MH P34.

E. SPLICE CABLE 3 TO CABLE AC AND CABLE 10 TO CABLE AK IN MH P35.

F. TIE BETWEEN T921B AND T923 IS OPEN. FEEDER IS ON PARKING STAND IN T923.

G. FOR NEW AND EXISTING CABLE SCHEDULE, SEE DRAWING E16.

| SYM. | ZONE | DESCRIPTION | DATE | APPROVED |
|---|---|---|---|---|
| 4 | | REVISED SHEETS 1–18, M. B. P. | 09/09 | |

Fred Wilson & Associates, Inc.
Consulting Engineers
C.A. NO. 7188 • 904-398-8636
3970 Hendricks Avenue • Jacksonville, FL 32207

| SIGNATURES | | DATE |
|---|---|---|
| DESIGNED | V.R.K. | 03/06 |
| DRAWN | R.M.L. | 03/06 |
| CHECKED | A.M.R. | 03/06 |
| SUBMITTED | | |
| APPROVED | | |
| APPROVED | | |
| APPROVED | | |
| APPROVED | | |
| APPROVED | | |
| APPROVED | | |

NATIONAL AERONAUTICS AND SPACE ADMINISTRATION
JOHN F. KENNEDY SPACE CENTER, NASA
KENNEDY SPACE CENTER, FLORIDA

REPLACE PAD FEEDERS AND DUCTS
PADS A AND B

PAD A SINGLE LINE DIAGRAM
MODIFIED

FILE NO. | SIZE F | DWG. NO. 79K36517 | A
PROJ. NO. PCN 97396 | SHEET 4

FILE: PAD A 1L MOD REV A.DWG
THIS DRAWING PREPARED BY AutoCAD 2005

E2

KSC FORM 1-11A (REV 6/91) (C/G 12/93)

NOTICE — WHEN GOVERNMENT DRAWINGS, SPECIFICATIONS, OR OTHER DATA ARE USED FOR ANY PURPOSE OTHER THAN IN CONNECTION WITH A DEFINITELY RELATED GOVERNMENT PROCUREMENT OPERATION, THE UNITED STATES GOVERNMENT THEREBY INCURS NO RESPONSIBILITY, NOR ANY OBLIGATION WHATSOEVER; AND THE FACT THAT THE GOVERNMENT MAY HAVE FORMULATED, FURNISHED, OR IN ANY WAY SUPPLIED THE SAID DRAWINGS, SPECIFICATIONS OR OTHER DATA IS NOT TO BE REGARDED BY IMPLICATION OR OTHERWISE AS IN ANY MANNER LICENSING THE HOLDER OR ANY OTHER PERSON OR CORPORATION, OR CONVEYING ANY RIGHTS OR PERMISSION TO MANUFACTURE, USE, OR SELL ANY PATENTED INVENTION THAT MAY IN ANY WAY BE RELATED THERETO.

SPECIFIC NOTES:

A. FOR GENERAL NOTES AND LEGEND, SEE DRAWING V2.

B. SCHEDULED TO BE INSTALLED ON 79K38550

C. FOR EXISTING CABLE SCHEDULE SEE DRAWING E16.

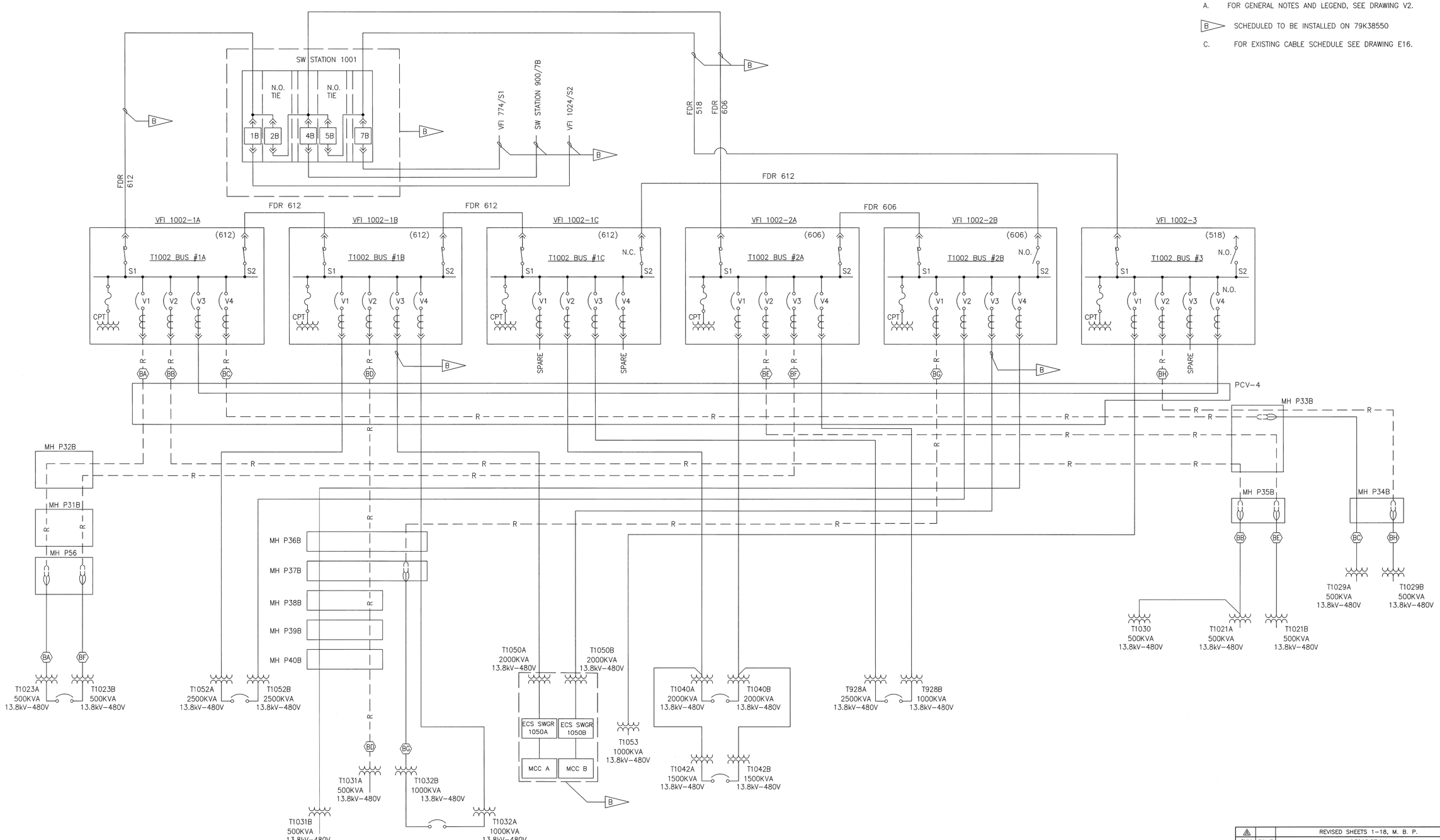


EXISTING SINGLE LINE

| SYM. | ZONE | DESCRIPTION | DATE | APPROVED |
|---|---|---|---|---|
| 3 | | REVISED SHEETS 1-18, M. B. P. | 09/09 | 9/28/09 |

Fred Wilson & Associates, Inc.
Consulting Engineers
C.A. NO. 7188 • 904-398-8636
3970 Hendricks Avenue • Jacksonville, FL 32207

| SIGNATURES | | DATE |
|---|---|---|
| DESIGNED | V.R.K. | 03/06 |
| DRAWN | R.M.L. | 03/06 |
| CHECKED | A.M.R. | 03/06 |
| SUBMITTED | | |
| APPROVED | | |
| APPROVED | | |
| APPROVED | | |
| APPROVED | | |
| APPROVED | | |
| APPROVED | | |

NATIONAL AERONAUTICS AND SPACE ADMINISTRATION
JOHN F. KENNEDY SPACE CENTER, NASA
KENNEDY SPACE CENTER, FLORIDA

REPLACE PAD FEEDERS AND DUCTS PADS A AND B

PAD B SINGLE LINE DIAGRAM

FILE: PAD B 1-LINE REV A.DWG
THIS DRAWING PREPARED BY AutoCAD 2005

E3

| FILE NO. | SIZE | DWG. NO. | |
|---|---|---|---|
| | F | 79K36517 | A |
| PROJ. NO. PCN 97396 | | SHEET 5 | |

KSC FORM 1-11A (REV 6/91) (C/O 12/93)

NOTICE – WHEN GOVERNMENT DRAWINGS, SPECIFICATIONS, OR OTHER DATA ARE USED FOR ANY PURPOSE, OTHER THAN IN CONNECTION WITH A DEFINITELY RELATED GOVERNMENT PROCUREMENT OPERATION, THE UNITED STATES GOVERNMENT THEREBY INCURS NO RESPONSIBILITY NOR ANY OBLIGATION WHATSOEVER; AND THE FACT THAT THE GOVERNMENT MAY HAVE FORMULATED, FURNISHED, OR IN ANY WAY SUPPLIED THE SAID DRAWINGS, SPECIFICATIONS, OR OTHER DATA IS NOT TO BE REGARDED BY IMPLICATION OR OTHERWISE AS IN ANY MANNER LICENSING THE HOLDER OR ANY OTHER PERSON OR CORPORATION, OR CONVEYING ANY RIGHTS OR PERMISSION TO MANUFACTURE, USE, OR SELL ANY PATENTED INVENTION THAT MAY IN ANY WAY BE RELATED THERETO.

SPECIFIC NOTES:

A. FOR GENERAL NOTES AND LEGEND, SEE DRAWING V2.

B SCHEDULED TO BE INSTALLED ON 79K38550

C. FOR NEW AND EXISTING CABLE SCHEDULE, SEE DRAWING E16.

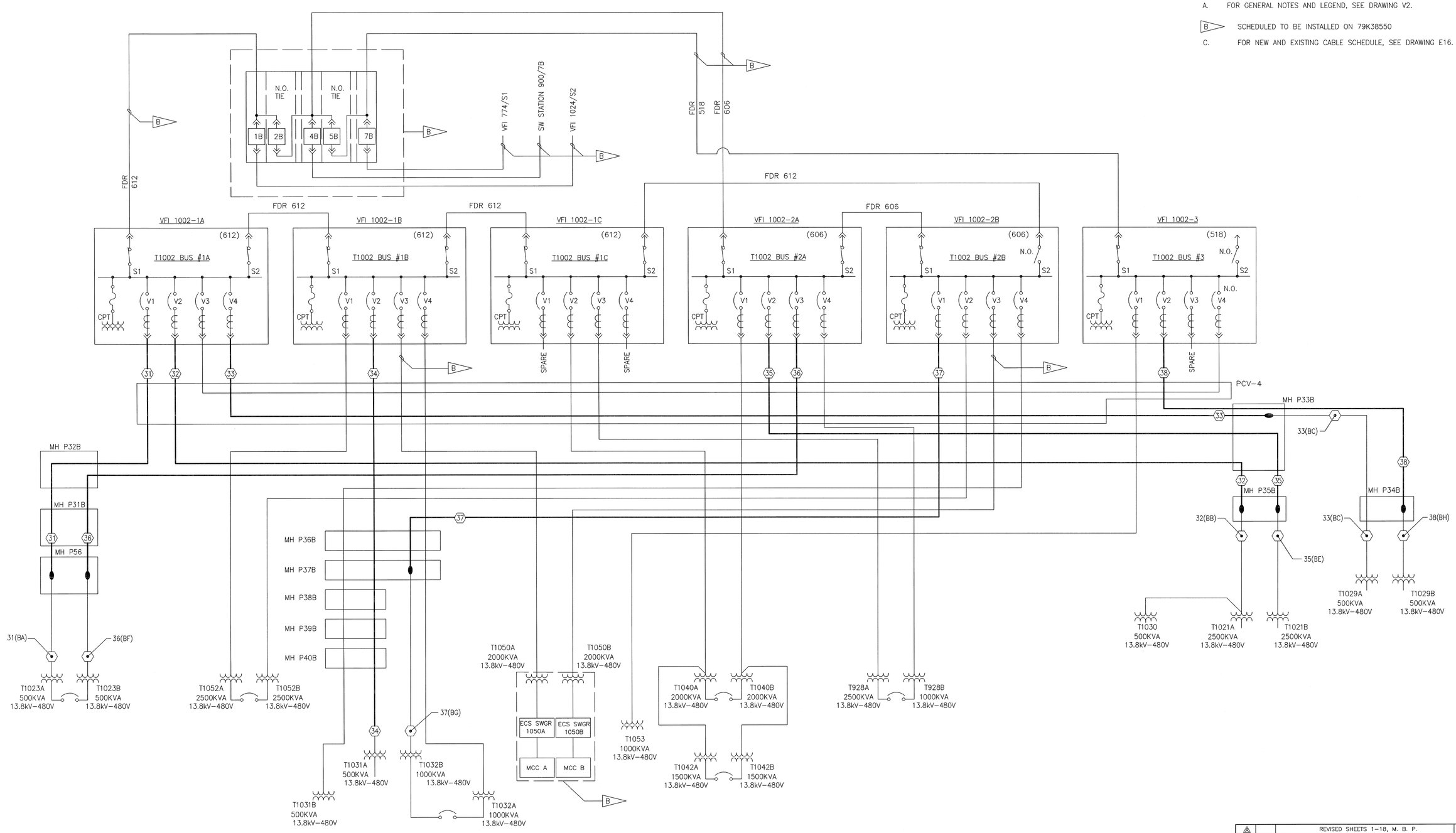


MODIFIED SINGLE LINE

| SYM. | ZONE | DESCRIPTION | DATE | APPROVED |
|---|---|---|---|---|
| 4 | | REVISED SHEETS 1-18, M. B. P. | 09/09 | 9/28/09 |

Fred Wilson & Associates, Inc.
Consulting Engineers
C.A. NO. 7188 • 904-398-8636
3970 Hendricks Avenue • Jacksonville, FL 32207

| SIGNATURES | | DATE |
|---|---|---|
| DESIGNED | V.R.K. | 03/06 |
| DRAWN | R.M.L. | 03/06 |
| CHECKED | A.M.R. | 03/06 |
| SUBMITTED | | |
| APPROVED | | |
| APPROVED | | |
| APPROVED | | |
| APPROVED | | |
| APPROVED | | |
| APPROVED | | |

NATIONAL AERONAUTICS AND SPACE ADMINISTRATION
JOHN F. KENNEDY SPACE CENTER, NASA
KENNEDY SPACE CENTER, FLORIDA

REPLACE PAD FEEDERS AND DUCTS
PADS A AND B

PAD B SINGLE LINE DIAGRAM
MODIFIED

FILE: PAD B 1L MOD REV A.DWG
THIS DRAWING PREPARED BY AutoCAD 2005

E4

FILE NO. | SIZE F | DWG. NO. 79K36517 | A
PROJ. NO. PCN 97396 | SHEET 6

KSC FORM 1-11A (REV 6/91) (C/G 12/93)

NOTICE — WHEN GOVERNMENT DRAWINGS, SPECIFICATIONS, OR OTHER DATA ARE USED FOR ANY PURPOSE OTHER THAN IN CONNECTION WITH A DEFINITELY RELATED GOVERNMENT PROCUREMENT OPERATION, THE UNITED STATES GOVERNMENT THEREBY INCURS NO RESPONSIBILITY NOR ANY OBLIGATION WHATSOEVER; AND THE FACT THAT THE GOVERNMENT MAY HAVE FORMULATED, FURNISHED, OR IN ANY WAY SUPPLIED THE SAID DRAWINGS, SPECIFICATIONS, OR OTHER DATA IS NOT TO BE REGARDED BY IMPLICATION OR OTHERWISE AS IN ANY MANNER LICENSING THE HOLDER OR ANY OTHER PERSON OR CORPORATION, OR CONVEYING ANY RIGHTS OR PERMISSION TO MANUFACTURE, USE, OR SELL ANY PATENTED INVENTION THAT MAY IN ANY WAY BE RELATED THERETO.

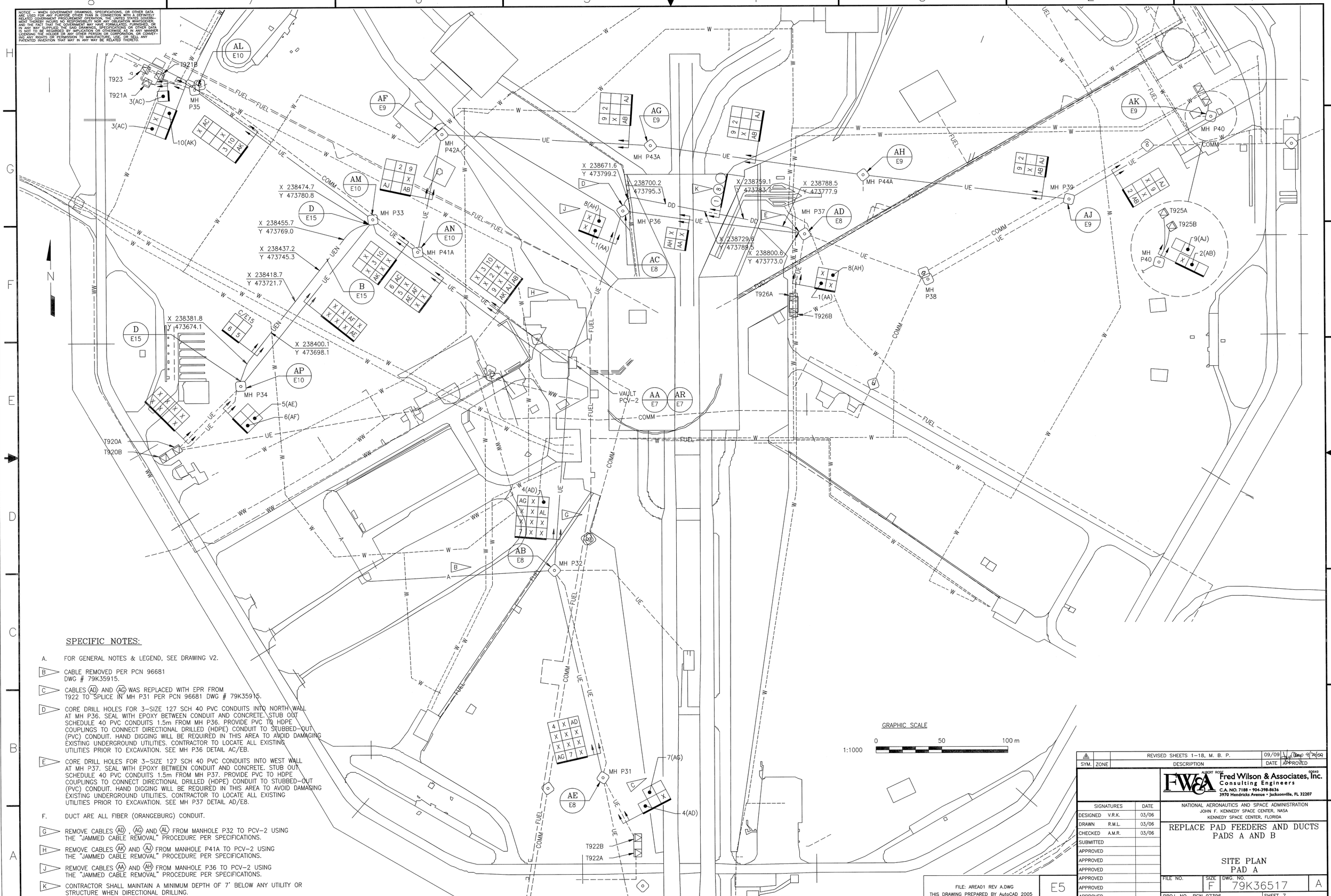


## SPECIFIC NOTES:

A. FOR GENERAL NOTES & LEGEND, SEE DRAWING V2.

B. CABLE REMOVED PER PCN 96681 DWG # 79K35915.

C. CABLES (AD) AND (AG) WAS REPLACED WITH EPR FROM T922 TO SPLICE IN MH P31 PER PCN 96681 DWG # 79K35915.

D. CORE DRILL HOLES FOR 3-SIZE 127 SCH 40 PVC CONDUITS INTO NORTH WALL AT MH P36. SEAL WITH EPOXY BETWEEN CONDUIT AND CONCRETE. STUB OUT SCHEDULE 40 PVC CONDUITS 1.5m FROM MH P36. PROVIDE PVC TO HDPE COUPLINGS TO CONNECT DIRECTIONAL DRILLED (HDPE) CONDUIT TO STUBBED-OUT (PVC) CONDUIT. HAND DIGGING WILL BE REQUIRED IN THIS AREA TO AVOID DAMAGING EXISTING UNDERGROUND UTILITIES. CONTRACTOR TO LOCATE ALL EXISTING UTILITIES PRIOR TO EXCAVATION. SEE MH P36 DETAIL AC/EB.

E. CORE DRILL HOLES FOR 3-SIZE 127 SCH 40 PVC CONDUITS INTO WEST WALL AT MH P37. SEAL WITH EPOXY BETWEEN CONDUIT AND CONCRETE. STUB OUT SCHEDULE 40 PVC CONDUITS 1.5m FROM MH P37. PROVIDE PVC TO HDPE COUPLINGS TO CONNECT DIRECTIONAL DRILLED (HDPE) CONDUIT TO STUBBED-OUT (PVC) CONDUIT. HAND DIGGING WILL BE REQUIRED IN THIS AREA TO AVOID DAMAGING EXISTING UNDERGROUND UTILITIES. CONTRACTOR TO LOCATE ALL EXISTING UTILITIES PRIOR TO EXCAVATION. SEE MH P37 DETAIL AD/E8.

F. DUCT ARE ALL FIBER (ORANGEBURG) CONDUIT.

G. REMOVE CABLES (AD), (AG) AND (AL) FROM MANHOLE P32 TO PCV-2 USING THE "JAMMED CABLE REMOVAL" PROCEDURE PER SPECIFICATIONS.

H. REMOVE CABLES (AK) AND (AJ) FROM MANHOLE P41A TO PCV-2 USING THE "JAMMED CABLE REMOVAL" PROCEDURE PER SPECIFICATIONS.

J. REMOVE CABLES (AA) AND (AH) FROM MANHOLE P36 TO PCV-2 USING THE "JAMMED CABLE REMOVAL" PROCEDURE PER SPECIFICATIONS.

K. CONTRACTOR SHALL MAINTAIN A MINIMUM DEPTH OF 7' BELOW ANY UTILITY OR STRUCTURE WHEN DIRECTIONAL DRILLING.

FILE: AREA01 REV A.DWG
THIS DRAWING PREPARED BY AutoCAD 2005

E5

| SYM. | ZONE | DESCRIPTION | DATE | APPROVED |
|---|---|---|---|---|
| A | | REVISED SHEETS 1-18, M. B. P. | 09/09 | 9/24/09 |

Fred Wilson & Associates, Inc.
Consulting Engineers
C.A. NO. 7188 • 904-398-8636
3970 Hendricks Avenue • Jacksonville, FL 32207

| SIGNATURES | | DATE |
|---|---|---|
| DESIGNED | V.R.K. | 03/06 |
| DRAWN | R.M.L. | 03/06 |
| CHECKED | A.M.R. | 03/06 |
| SUBMITTED | | |
| APPROVED | | |
| APPROVED | | |
| APPROVED | | |
| APPROVED | | |
| APPROVED | | |
| APPROVED | | |

NATIONAL AERONAUTICS AND SPACE ADMINISTRATION
JOHN F. KENNEDY SPACE CENTER, NASA
KENNEDY SPACE CENTER, FLORIDA

# REPLACE PAD FEEDERS AND DUCTS PADS A AND B

## SITE PLAN PAD A

| FILE NO. | SIZE | DWG. NO. | |
|---|---|---|---|
| | F | 79K36517 | A |
| PROJ. NO. PCN 97396 | | SHEET 7 | |

KSC FORM 1-11A (REV 6/91) (C/O 12/93)

NOTICE — WHEN GOVERNMENT DRAWINGS, SPECIFICATIONS, OR OTHER DATA ARE USED FOR ANY PURPOSE OTHER THAN IN CONNECTION WITH A DEFINITELY RELATED GOVERNMENT PROCUREMENT OPERATION, THE UNITED STATES GOVERNMENT THEREBY INCURS NO RESPONSIBILITY NOR ANY OBLIGATION WHATSOEVER; AND THE FACT THAT THE GOVERNMENT MAY HAVE FORMULATED, FURNISHED, OR IN ANY WAY SUPPLIED THE SAID DRAWINGS, SPECIFICATIONS OR OTHER DATA IS NOT TO BE REGARDED BY IMPLICATION OR OTHERWISE AS IN ANY MANNER LICENSING THE HOLDER OR ANY OTHER PERSON OR CORPORATION, OR CONVEYING ANY RIGHTS OR PERMISSION TO MANUFACTURE, USE, OR SELL ANY PATENTED INVENTION THAT MAY IN ANY WAY BE RELATED THERETO.

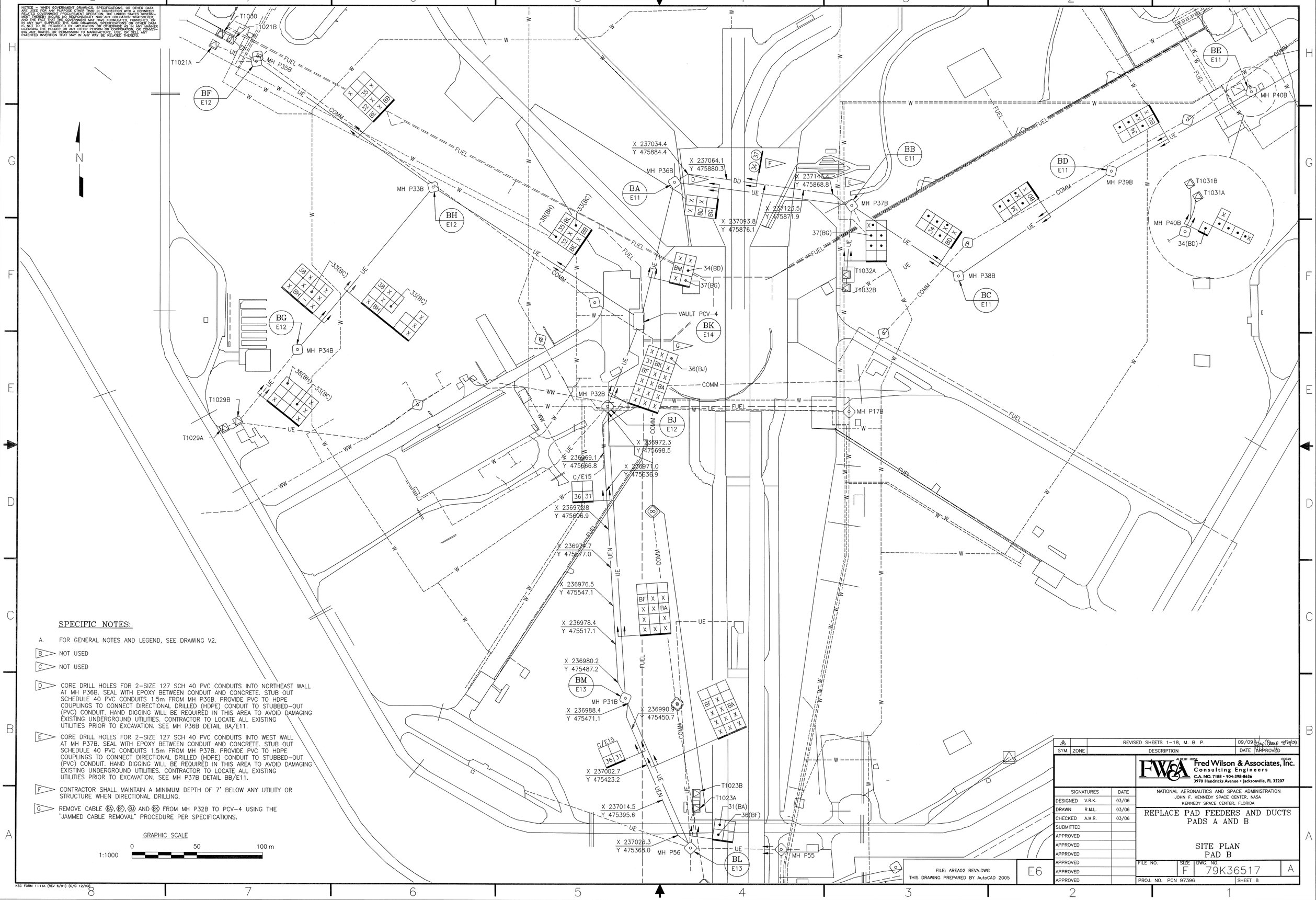


## SPECIFIC NOTES:

A. FOR GENERAL NOTES AND LEGEND, SEE DRAWING V2.

B. NOT USED

C. NOT USED

D. CORE DRILL HOLES FOR 2-SIZE 127 SCH 40 PVC CONDUITS INTO NORTHEAST WALL AT MH P36B. SEAL WITH EPOXY BETWEEN CONDUIT AND CONCRETE. STUB OUT SCHEDULE 40 PVC CONDUITS 1.5m FROM MH P36B. PROVIDE PVC TO HDPE COUPLINGS TO CONNECT DIRECTIONAL DRILLED (HDPE) CONDUIT TO STUBBED-OUT (PVC) CONDUIT. HAND DIGGING WILL BE REQUIRED IN THIS AREA TO AVOID DAMAGING EXISTING UNDERGROUND UTILITIES. CONTRACTOR TO LOCATE ALL EXISTING UTILITIES PRIOR TO EXCAVATION. SEE MH P36B DETAIL BA/E11.

E. CORE DRILL HOLES FOR 2-SIZE 127 SCH 40 PVC CONDUITS INTO WEST WALL AT MH P37B. SEAL WITH EPOXY BETWEEN CONDUIT AND CONCRETE. STUB OUT SCHEDULE 40 PVC CONDUITS 1.5m FROM MH P37B. PROVIDE PVC TO HDPE COUPLINGS TO CONNECT DIRECTIONAL DRILLED (HDPE) CONDUIT TO STUBBED-OUT (PVC) CONDUIT. HAND DIGGING WILL BE REQUIRED IN THIS AREA TO AVOID DAMAGING EXISTING UNDERGROUND UTILITIES. CONTRACTOR TO LOCATE ALL EXISTING UTILITIES PRIOR TO EXCAVATION. SEE MH P37B DETAIL BB/E11.

F. CONTRACTOR SHALL MAINTAIN A MINIMUM DEPTH OF 7' BELOW ANY UTILITY OR STRUCTURE WHEN DIRECTIONAL DRILLING.

G. REMOVE CABLE (BA), (BF), (BJ) AND (BK) FROM MH P32B TO PCV-4 USING THE "JAMMED CABLE REMOVAL" PROCEDURE PER SPECIFICATIONS.

GRAPHIC SCALE

1:1000 — 0 — 50 — 100 m

| SYM. | ZONE | DESCRIPTION | DATE | APPROVED |
|---|---|---|---|---|
| 4 | | REVISED SHEETS 1-18, M. B. P. | 09/09 | |

Fred Wilson & Associates, Inc.
Consulting Engineers
C.A. NO. 7188 • 904-398-8636
3970 Hendricks Avenue • Jacksonville, FL 32207

| SIGNATURES | | DATE |
|---|---|---|
| DESIGNED | V.R.K. | 03/06 |
| DRAWN | R.M.L. | 03/06 |
| CHECKED | A.M.R. | 03/06 |
| SUBMITTED | | |
| APPROVED | | |
| APPROVED | | |
| APPROVED | | |
| APPROVED | | |
| APPROVED | | |
| APPROVED | | |

NATIONAL AERONAUTICS AND SPACE ADMINISTRATION
JOHN F. KENNEDY SPACE CENTER, NASA
KENNEDY SPACE CENTER, FLORIDA

# REPLACE PAD FEEDERS AND DUCTS PADS A AND B

## SITE PLAN PAD B

| FILE NO. | SIZE | DWG. NO. | |
|---|---|---|---|
| | F | 79K36517 | A |
| PROJ. NO. PCN 97396 | | SHEET 8 | |

KSC FORM 1-11A (REV 6/91) (C/G 12/93)

NOTICE – WHEN GOVERNMENT DRAWINGS, SPECIFICATIONS, OR OTHER DATA ARE USED FOR ANY PURPOSE OTHER THAN IN CONNECTION WITH A DEFINITELY RELATED GOVERNMENT PROCUREMENT OPERATION, THE UNITED STATES GOVERNMENT THEREBY INCURS NO RESPONSIBILITY NOR ANY OBLIGATION WHATSOEVER; AND THE FACT THAT THE GOVERNMENT MAY HAVE FORMULATED, FURNISHED, OR IN ANY WAY SUPPLIED THE SAID DRAWINGS, SPECIFICATIONS, OR OTHER DATA IS NOT TO BE REGARDED BY IMPLICATION OR OTHERWISE AS IN ANY MANNER LICENSING THE HOLDER OR ANY OTHER PERSON OR CORPORATION, OR CONVEYING ANY RIGHTS OR PERMISSION TO MANUFACTURE, USE, OR SELL ANY PATENTED INVENTION THAT MAY IN ANY WAY BE RELATED THERETO.

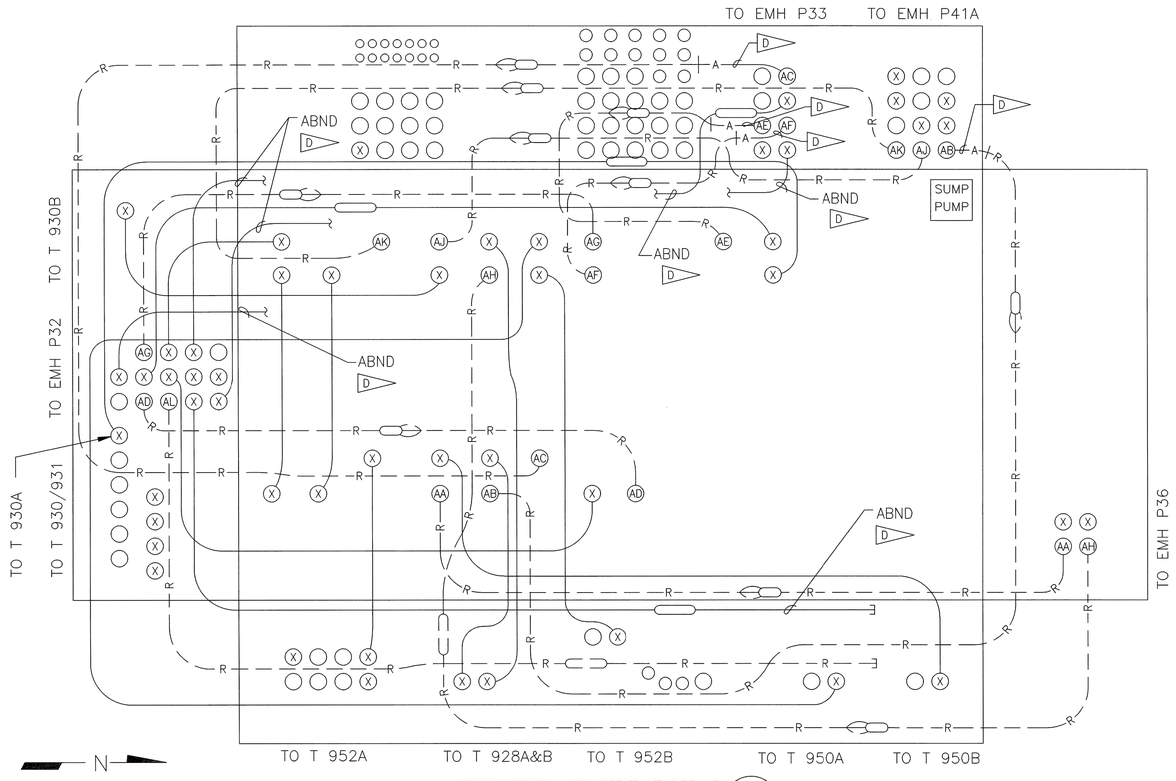


EXISTING VAULT PCV-2 (AA / E5)

NOT TO SCALE

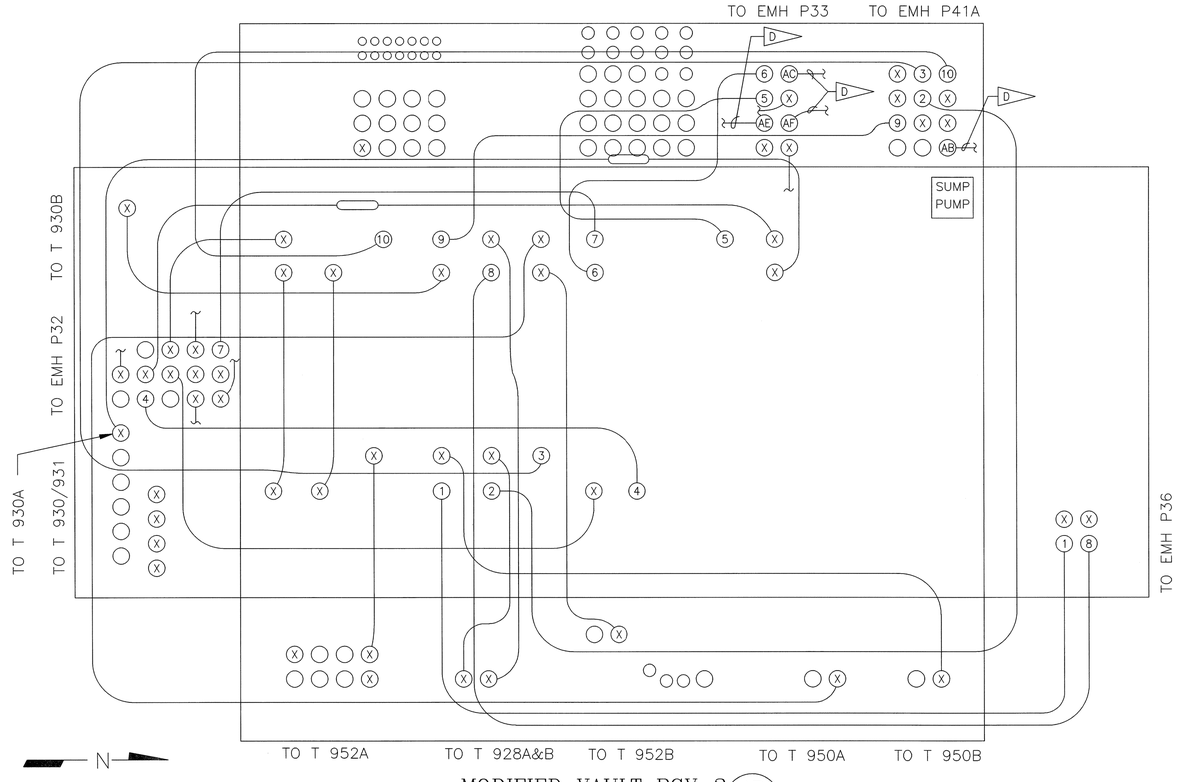


MODIFIED VAULT PCV-2 (AR / E5)

C NOT TO SCALE

## SPECIFIC NOTES:

A. FOR GENERAL NOTES AND LEGEND, SEE DRAWING V2.

B. PROVIDE CABLE TAGS ON ALL NEW CABLES. SEE CIRCUIT IDENTIFICATION TAG DETAIL R/V2.

C. CONTRACTOR TO PROVIDE RACK ARMS AND INSULATORS AS NEEDED ON EXISTING WALL MOUNTED UNISTRUT RACKS. EXISTING UNISTRUT RACKS ARE NOT SHOWN FOR CLARITY.

D. CUT CABLE BACK SO IT EXTENDS 500MM FROM DUCT ENTRANCE INTO PCV-2. SEAL ENDS OF PILC CABLE TO PREVENT ANY OIL LEAKAGE FROM CABLE.

| SYM. | ZONE | DESCRIPTION | DATE | APPROVED |
|---|---|---|---|---|
| 3 | | REVISED SHEETS 1-18, M. B. P. | 09/09 | 9/20/09 |

Fred Wilson & Associates, Inc.
Consulting Engineers
C.A. NO. 7188 • 904-398-8636
3970 Hendricks Avenue • Jacksonville, FL 32207

| SIGNATURES | | DATE |
|---|---|---|
| DESIGNED | V.R.K. | 4/06 |
| DRAWN | R.M.L. | 4/06 |
| CHECKED | A.M.R. | 4/06 |
| SUBMITTED | | |
| APPROVED | | |
| APPROVED | | |
| APPROVED | | |
| APPROVED | | |
| APPROVED | | |
| APPROVED | | |

NATIONAL AERONAUTICS AND SPACE ADMINISTRATION
JOHN F. KENNEDY SPACE CENTER, NASA
KENNEDY SPACE CENTER, FLORIDA

REPLACE PAD FEEDERS AND DUCTS
PADS A AND B

MANHOLE LAYOUTS
PAD A – SHEET 1

FILE NO. | SIZE F | DWG. NO. 79K36517 | A

PROJ. NO. PCN 97396 | SHEET 9

FILE: MHDET01 REV A.DWG
THIS DRAWING PREPARED BY AutoCAD 2005

E7

KSC FORM 1-11A (REV 6/91) (C/G 12/93)

NOTICE – WHEN GOVERNMENT DRAWINGS, SPECIFICATIONS, OR OTHER DATA ARE USED FOR ANY PURPOSE OTHER THAN IN CONNECTION WITH A DEFINITELY RELATED GOVERNMENT PROCUREMENT OPERATION, THE UNITED STATES GOVERNMENT THEREBY INCURS NO RESPONSIBILITY NOR ANY OBLIGATION WHATSOEVER, AND THE FACT THAT THE GOVERNMENT MAY HAVE FORMULATED, FURNISHED, OR IN ANY WAY SUPPLIED THE SAID DRAWINGS, SPECIFICATIONS, OR OTHER DATA IS NOT TO BE REGARDED BY IMPLICATION OR OTHERWISE IN ANY MANNER LICENSING THE HOLDER OR ANY OTHER PERSON OR CORPORATION, OR CONVEYING ANY RIGHTS OR PERMISSION TO MANUFACTURE, USE, OR SELL ANY PATENTED INVENTION THAT MAY IN ANY WAY BE RELATED THERETO.

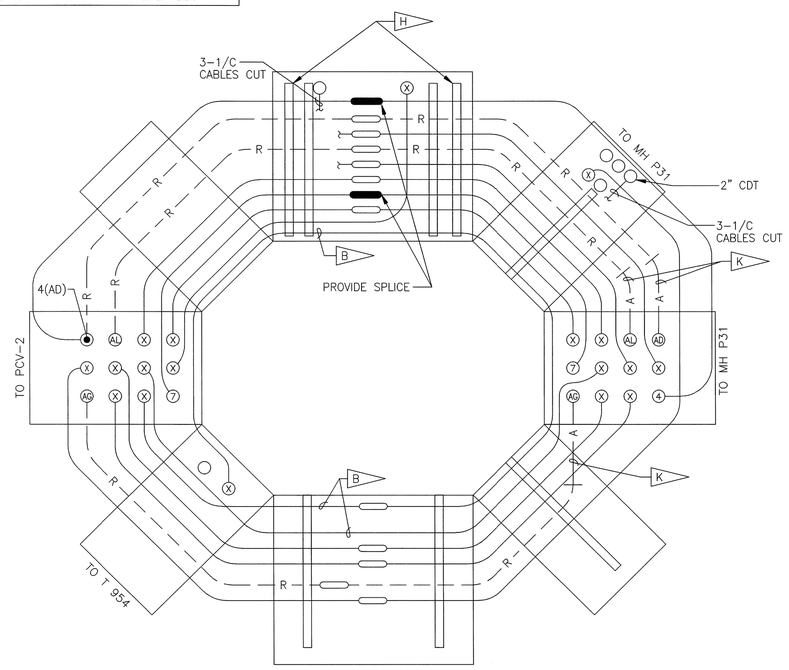


MANHOLE P32 (AB / E5)
NOT TO SCALE

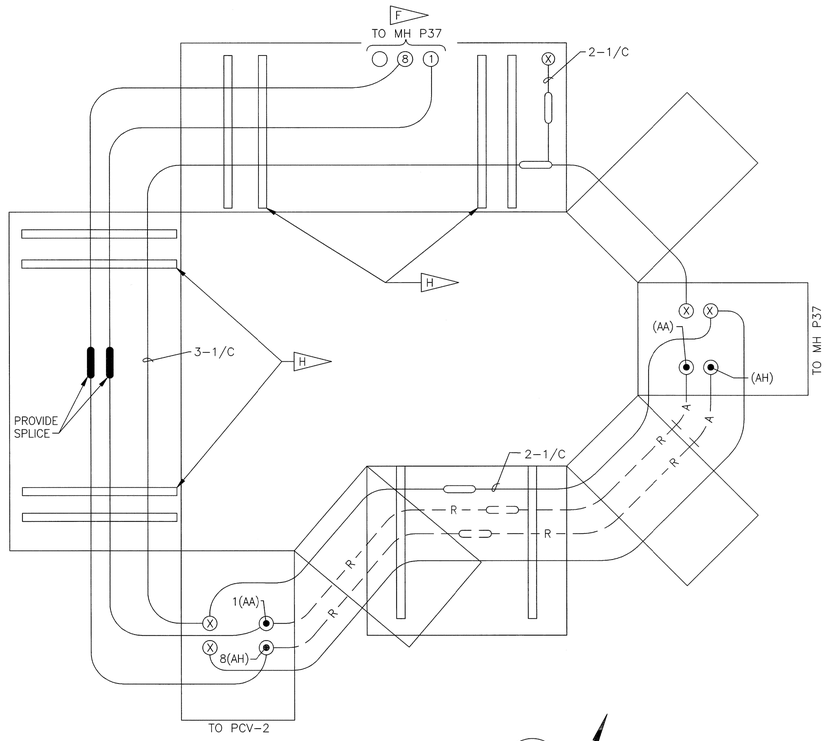


MANHOLE P36 (AC / E5)
NOT TO SCALE

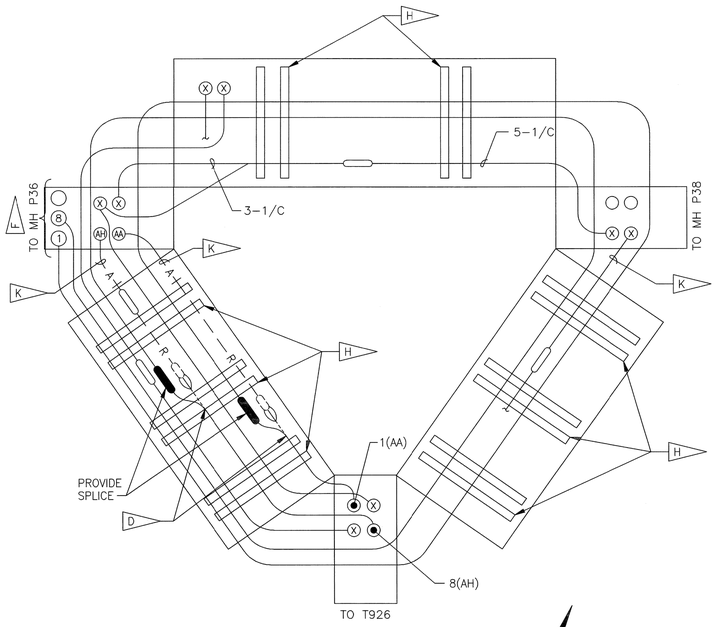


MANHOLE P37 (AD / E5)
NOT TO SCALE

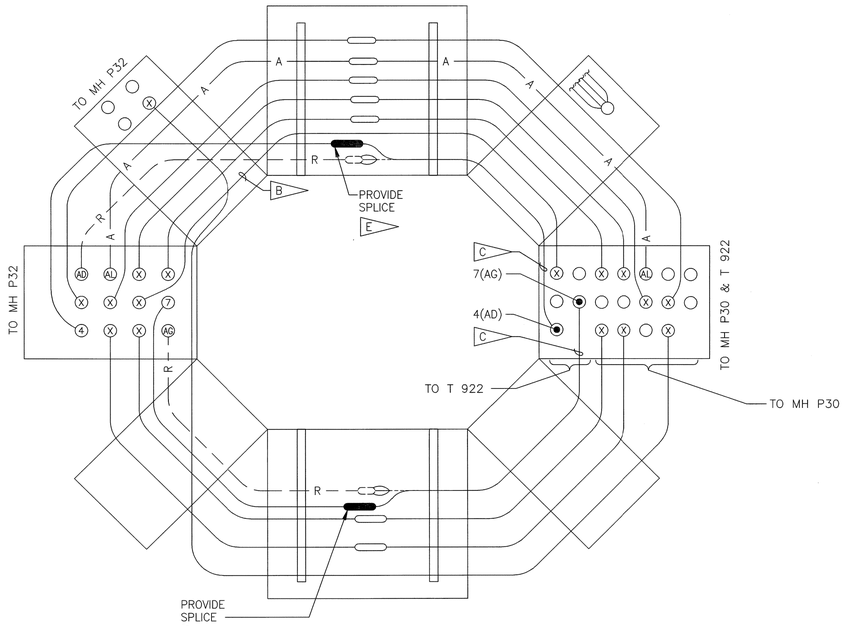


MANHOLE P31 (AE / E5)
NOT TO SCALE

## SPECIFIC NOTES:

A. FOR GENERAL NOTES AND LEGEND, SEE DRAWING V2.

B. WAS REMOVED PER PCN 96681 DWG #79K35915.

C. CABLE WAS REPLACED FROM T922 TO SPLICE IN MH P31 PER PCN 96681 DWG. NO. 79K35915.

D. SPLICE CABLE (1) TO EXISTING EPR CABLE (AA) AND CABLE (8) TO EXISTING EPR CABLE (AH) IN MH P37.

E. SPLICE CABLE (4) TO EXISTING EPR CABLE (AD) AND CABLE (7) TO EXISTING EPR CABLE (AG) IN MH P31.

F. CORE DRILL FOR 127mm, SCHEDULE 40 PVC CONDUIT. STUB-OUT CONDUIT 1.5m FROM MANHOLE.

G. NOT USED

H. PROVIDE CABLE RACK AND RACK ARMS. SEE DETAIL E/E15.

J. PROVIDE CABLE TAGS ON ALL NEW CABLES. SEE CIRCUIT IDENTIFICATION TAG DETAIL R/V2.

K. CUT CABLE BACK SO IT EXTENDS 500MM FROM THE DUCT ENTRANCE INTO THE MANHOLE. SEAL ENDS OF PILC CABLE TO PREVENT OIL LEAKAGE FROM THE CABLE.

| SYM. | ZONE | DESCRIPTION | DATE | APPROVED |
|---|---|---|---|---|
| A | | REVISED SHEETS 1–18, M. B. P. | 09/09 | |

Fred Wilson & Associates, Inc. — Consulting Engineers
C.A. NO. 7188 • 904-398-8636
3970 Hendricks Avenue • Jacksonville, FL 32207

| SIGNATURES | | DATE |
|---|---|---|
| DESIGNED | V.R.K. | 4/06 |
| DRAWN | R.M.L. | 4/06 |
| CHECKED | A.M.R. | 4/06 |
| SUBMITTED | | |
| APPROVED | | |
| APPROVED | | |
| APPROVED | | |
| APPROVED | | |
| APPROVED | | |
| APPROVED | | |

NATIONAL AERONAUTICS AND SPACE ADMINISTRATION
JOHN F. KENNEDY SPACE CENTER, NASA
KENNEDY SPACE CENTER, FLORIDA

REPLACE PAD FEEDERS AND DUCTS
PADS A AND B

MANHOLE LAYOUTS
PAD A – SHEET 2

FILE NO. | SIZE F | DWG. NO. 79K36517 | A
PROJ. NO. PCN 97396 | SHEET 10

FILE: MHDET02 REV A.DWG
THIS DRAWING PREPARED BY AutoCAD 2005

E8

KSC FORM 1-11A (REV 6/91) (C/G 12/93)

NOTICE – WHEN GOVERNMENT DRAWINGS, SPECIFICATIONS, OR OTHER DATA ARE USED FOR ANY PURPOSE OTHER THAN IN CONNECTION WITH A DEFINITELY RELATED GOVERNMENT PROCUREMENT OPERATION, THE UNITED STATES GOVERNMENT THEREBY INCURS NO RESPONSIBILITY, NOR ANY OBLIGATION WHATSOEVER; AND THE FACT THAT THE GOVERNMENT MAY HAVE FORMULATED, FURNISHED, OR IN ANY WAY SUPPLIED THE SAID DRAWINGS, SPECIFICATIONS, OR OTHER DATA IS NOT TO BE REGARDED BY IMPLICATION OR OTHERWISE AS IN ANY MANNER LICENSING THE HOLDER OR ANY OTHER PERSON OR CORPORATION, OR CONVEYING ANY RIGHTS OR PERMISSION TO MANUFACTURE, USE, OR SELL ANY PATENTED INVENTION THAT MAY IN ANY WAY BE RELATED THERETO.

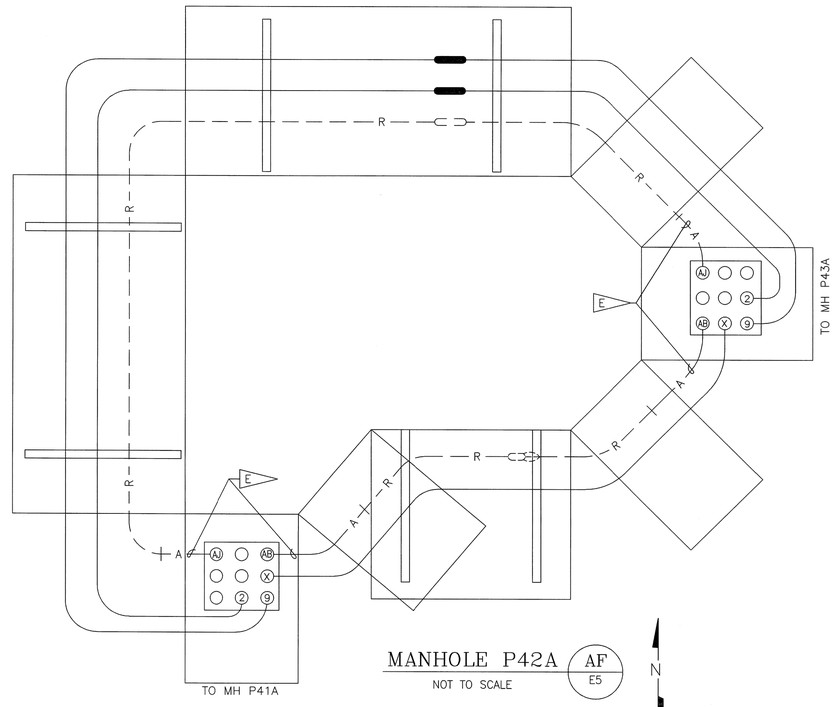


MANHOLE P42A (AF / E5)
NOT TO SCALE

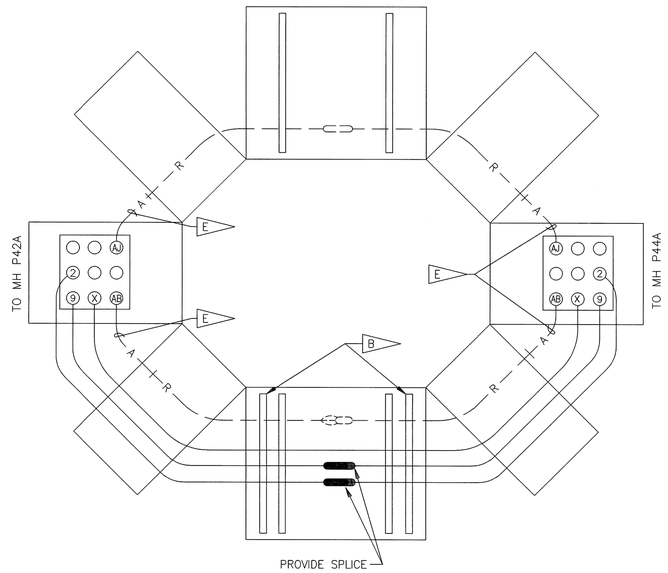


MANHOLE P43A (AG / E5)
NOT TO SCALE

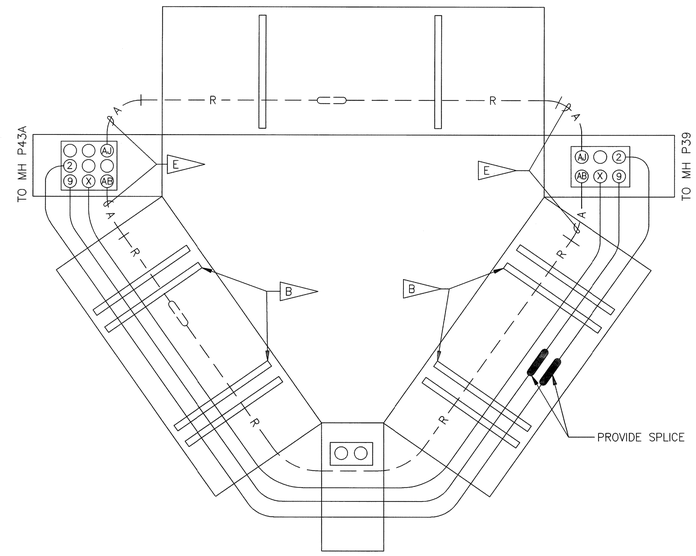


MANHOLE P44A (AH / E5)
NOT TO SCALE

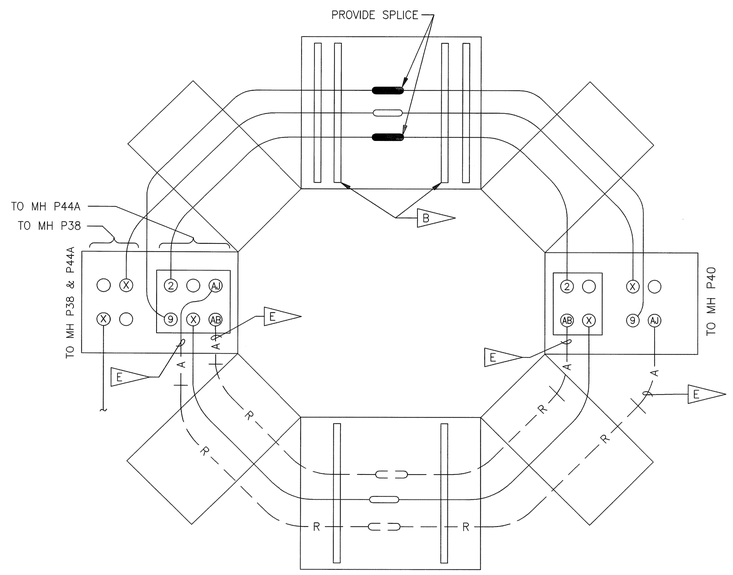


MANHOLE P39 (AJ / E5)
NOT TO SCALE

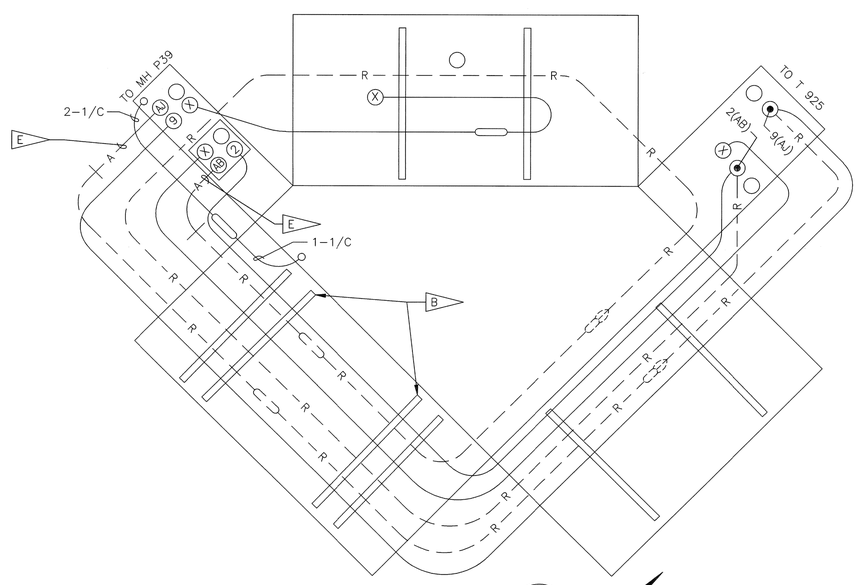


MANHOLE P40 (AK / E5)
NOT TO SCALE

SPECIFIC NOTES:

A. FOR GENERAL NOTES AND LEGEND, SEE DRAWING V2.

B. PROVIDE CABLE RACK AND RACK ARMS. SEE DETAIL E/E15.

C. NOT USED

D. PROVIDE CABLE TAGS ON ALL NEW CABLES. SEE CIRCUIT IDENTIFICATION TAG DETAIL R/V2.

E. CUT CABLE BACK SO IT EXTENDS 500MM FROM DUCT ENTRANCE INTO MANHOLE. SEAL ENDS OF PILC CABLE TO PREVENT ANY OIL LEAKAGE FROM CABLE.

| SYM. | ZONE | DESCRIPTION | DATE | APPROVED |
|---|---|---|---|---|
| 4 | | REVISED SHEETS 1–18, M. B. P. | 09/09 | |

Fred Wilson & Associates, Inc.
Consulting Engineers
C.A. NO. 7188 • 904-398-8636
3970 Hendricks Avenue • Jacksonville, FL 32207

| SIGNATURES | | DATE |
|---|---|---|
| DESIGNED | V.R.K. | 4/06 |
| DRAWN | R.M.L. | 4/06 |
| CHECKED | A.M.R. | 4/06 |
| SUBMITTED | | |
| APPROVED | | |
| APPROVED | | |
| APPROVED | | |
| APPROVED | | |
| APPROVED | | |
| APPROVED | | |

NATIONAL AERONAUTICS AND SPACE ADMINISTRATION
JOHN F. KENNEDY SPACE CENTER, NASA
KENNEDY SPACE CENTER, FLORIDA

REPLACE PAD FEEDERS AND DUCTS
PADS A AND B

MANHOLE LAYOUTS
PAD A – SHEET 3

| FILE NO. | SIZE | DWG. NO. | |
|---|---|---|---|
| | F | 79K36517 | A |
| PROJ. NO. PCN 97396 | | SHEET 11 | |

FILE: MHDET03 REV A.DWG
THIS DRAWING PREPARED BY AutoCAD 2005

E9

KSC FORM 1-11A (REV 6/91) (C/G 12/93)

NOTICE – WHEN GOVERNMENT DRAWINGS, SPECIFICATIONS, OR OTHER DATA ARE USED FOR ANY PURPOSE OTHER THAN IN CONNECTION WITH A DEFINITELY RELATED GOVERNMENT PROCUREMENT OPERATION, THE UNITED STATES GOVERNMENT THEREBY INCURS NO RESPONSIBILITY, NOR ANY OBLIGATION WHATSOEVER; AND THE FACT THAT THE GOVERNMENT MAY HAVE FORMULATED, FURNISHED, OR IN ANY WAY SUPPLIED THE SAID DRAWINGS, SPECIFICATIONS OR OTHER DATA IS NOT TO BE REGARDED BY IMPLICATION OR OTHERWISE AS IN ANY MANNER LICENSING THE HOLDER OR ANY OTHER PERSON OR CORPORATION, OR CONVEYING ANY RIGHTS OR PERMISSION TO MANUFACTURE, USE, OR SELL ANY PATENTED INVENTION THAT MAY IN ANY WAY BE RELATED THERETO.

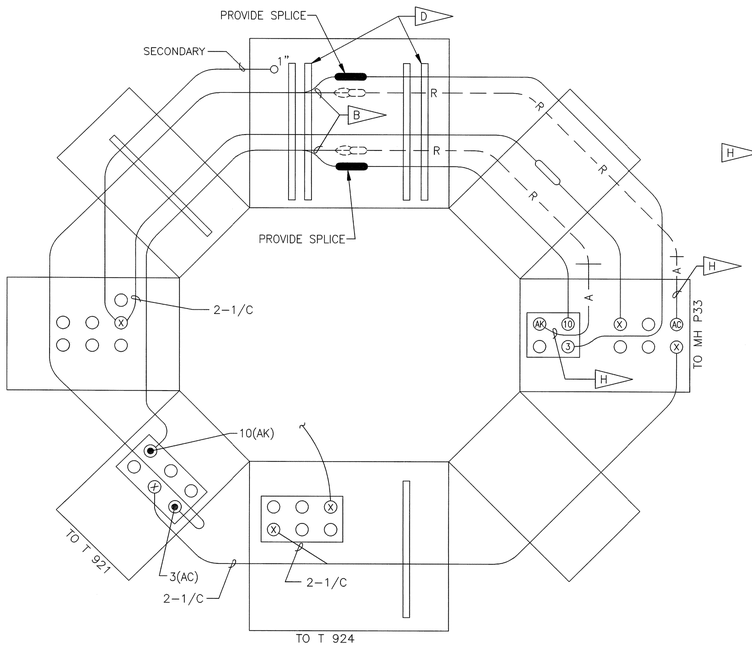


MANHOLE P35 (AL / E5)
NOT TO SCALE

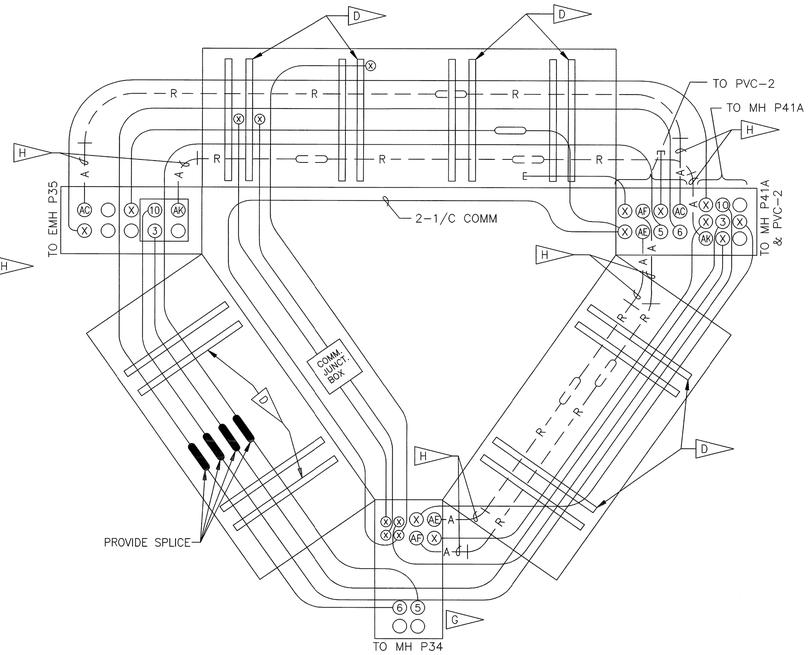


MANHOLE P33 (AM / E5)
NOT TO SCALE

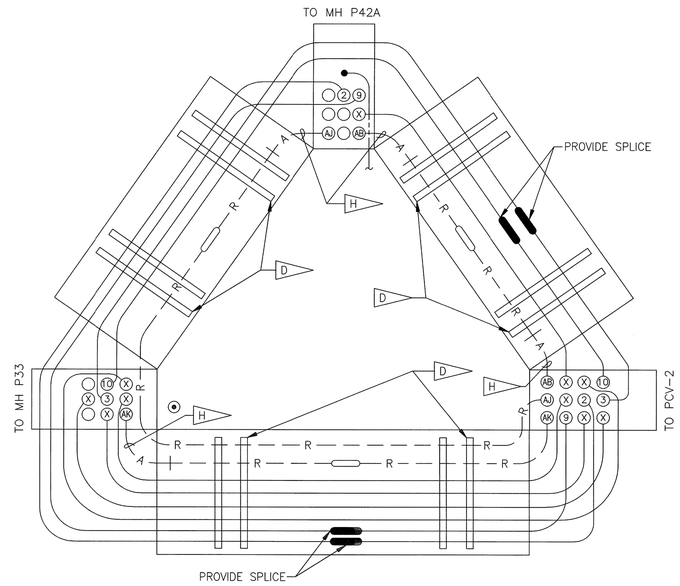


MANHOLE P41A (AN / E5)
NOT TO SCALE

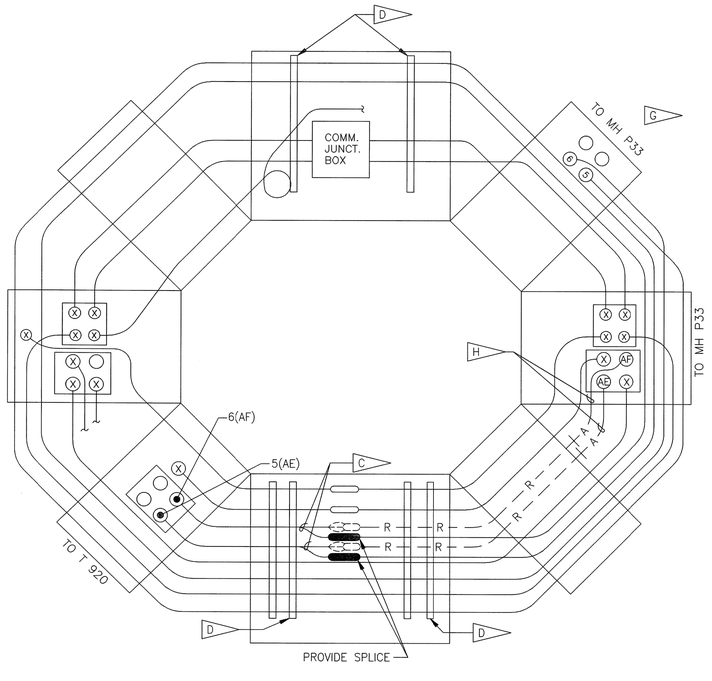


MANHOLE P34 (AP / E5)
NOT TO SCALE

SPECIFIC NOTES:

A. FOR GENERAL NOTES AND LEGEND SEE DRAWING V2.

B. SPLICE CABLE (3) TO EXISTING EPR CABLE (AC) AND CABLE (10) TO EXISTING EPR CABLE (AK) IN MH P35.

C. SPLICE CABLE (5) TO EXISTING EPR CABLE (AE) AND CABLE (6) TO EXISTING EPR CABLE (AF) IN MH P34.

D. PROVIDE CABLE RACK AND RACK ARMS. SEE DETAIL E/E15.

E. NOT USED

F. PROVIDE CABLE TAGS ON ALL NEW CABLES. SEE CIRCUIT IDENTIFICATION TAG DETAIL R/V2.

G. PROVIDE DUCT ENTRY INTO MANHOLE. SEE DETAIL D/E15.

H. CUT CABLE BACK SO IT EXTENDS 500MM FROM DUCT ENTRANCE INTO MANHOLE. SEAL ENDS OF PILC CABLE TO PREVENT ANY OIL LEAKAGE FROM CABLE.

| SYM. | ZONE | DESCRIPTION | DATE | APPROVED |
|---|---|---|---|---|
| A | | REVISED SHEETS 1–18, M. B. P. | 09/09 | |

Fred Wilson & Associates, Inc.
Consulting Engineers
C.A. NO. 7188 • 904-398-8636
3970 Hendricks Avenue • Jacksonville, FL 32207

| SIGNATURES | | DATE |
|---|---|---|
| DESIGNED | V.R.K. | 4/06 |
| DRAWN | R.M.L. | 4/06 |
| CHECKED | A.M.R. | 4/06 |
| SUBMITTED | | |
| APPROVED | | |
| APPROVED | | |
| APPROVED | | |
| APPROVED | | |
| APPROVED | | |
| APPROVED | | |

NATIONAL AERONAUTICS AND SPACE ADMINISTRATION
JOHN F. KENNEDY SPACE CENTER, NASA
KENNEDY SPACE CENTER, FLORIDA

REPLACE PAD FEEDERS AND DUCTS
PADS A AND B

MANHOLE LAYOUTS
PAD A – SHEET 4

| FILE NO. | SIZE | DWG. NO. | |
|---|---|---|---|
| | F | 79K36517 | A |
| PROJ. NO. PCN 97396 | | SHEET 12 | |

FILE: MHDET04 REV A.DWG
THIS DRAWING PREPARED BY AutoCAD 2008

E10

KSC FORM 1-11A (REV 6/91) (C/G 12/93)

NOTICE – WHEN GOVERNMENT DRAWINGS, SPECIFICATIONS, OR OTHER DATA ARE USED FOR ANY PURPOSE OTHER THAN IN CONNECTION WITH A DEFINITELY RELATED GOVERNMENT PROCUREMENT OPERATION, THE UNITED STATES GOVERNMENT THEREBY INCURS NO RESPONSIBILITY NOR ANY OBLIGATION WHATSOEVER; AND THE FACT THAT THE GOVERNMENT MAY HAVE FORMULATED, FURNISHED, OR IN ANY WAY SUPPLIED THE SAID DRAWINGS, SPECIFICATIONS, OR OTHER DATA IS NOT TO BE REGARDED BY IMPLICATION OR OTHERWISE AS IN ANY MANNER LICENSING THE HOLDER OR ANY OTHER PERSON OR CORPORATION, OR CONVEYING ANY RIGHTS OR PERMISSION TO MANUFACTURE, USE, OR SELL ANY PATENTED INVENTION THAT MAY IN ANY WAY BE RELATED THERETO.

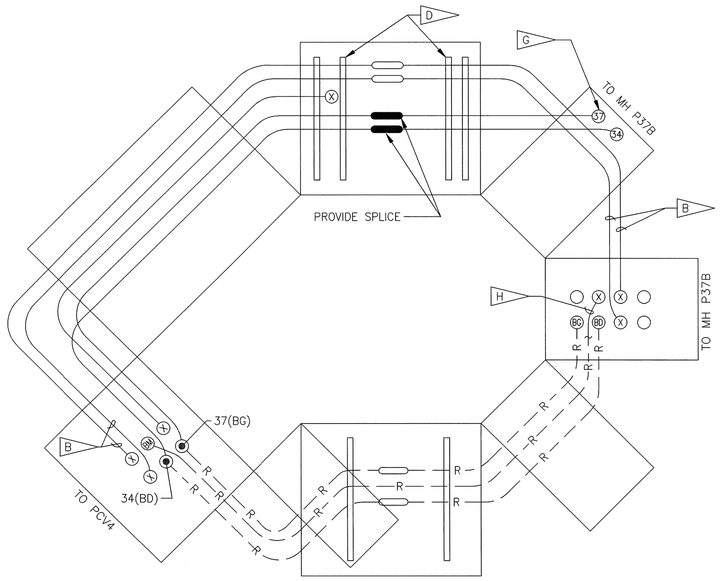


MANHOLE P36B (BA / E6)
NOT TO SCALE

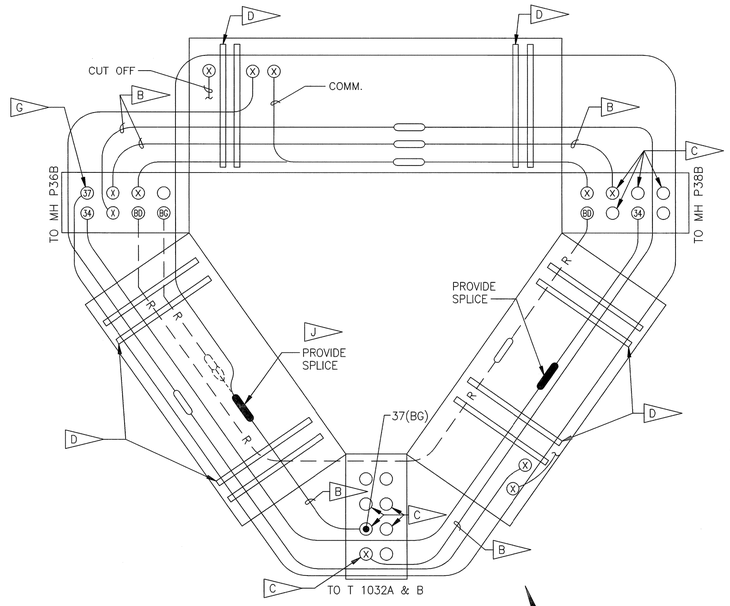


MANHOLE P37B (BB / E6)
NOT TO SCALE

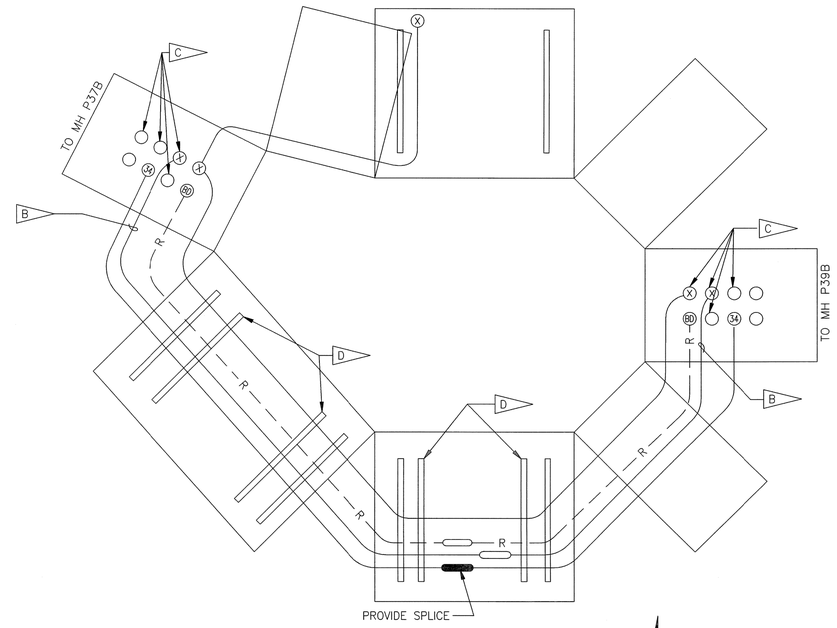


MANHOLE P38B (BC / E6)
NOT TO SCALE

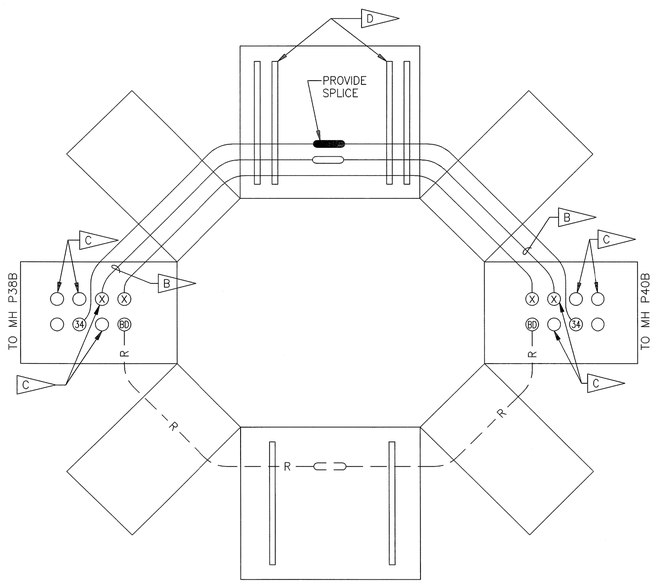


MANHOLE P39B (BD / E6)
NOT TO SCALE

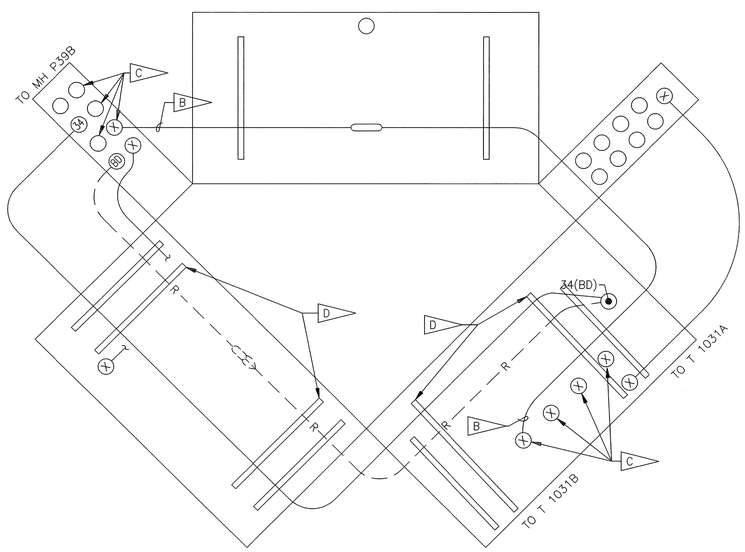


MANHOLE P40B (BE / E6)
NOT TO SCALE

SPECIFIC NOTES:

A. FOR GENERAL NOTES AND LEGEND, SEE DRAWING V2.

B. CABLE SCHEDULED TO BE INSTALLED ON PCN 96702.

C. CABLE SCHEDULED TO BE REMOVED ON PCN 96702.

D. PROVIDE CABLE RACK AND RACK ARMS. SEE DETAIL E/E15.

E. NOT USED

F. PROVIDE CABLE TAGS ON ALL NEW CABLES. SEE CIRCUIT IDENTIFICATION TAG DETAIL R/V2.

G. CORE DRILL HOLES FOR (2) SIZE 127 SCH 40 PVC CONDUITS. SEAL WITH EPOXY BETWEEN CONDUIT AND CONCRETE.

H. CUT CABLE BACK SO IT EXTENDS 12" FROM DUCT ENTRANCE INTO MANHOLE.

J. SPLICE CABLE (37) TO EXISTING EPR CABLE (BG) IN MANHOLE P37B.

| SYM. | ZONE | DESCRIPTION | DATE | APPROVED |
|---|---|---|---|---|
| 3 | | REVISED SHEETS 1–18, M. B. P. | 09/09 | 9/24/09 |

Fred Wilson & Associates, Inc.
Consulting Engineers
C.A. NO. 7188 • 904-398-8636
3970 Hendricks Avenue • Jacksonville, FL 32207
ALBERT ROSE 60649

| SIGNATURES | | DATE |
|---|---|---|
| DESIGNED | V.R.K. | 4/06 |
| DRAWN | R.M.L. | 4/06 |
| CHECKED | A.M.R. | 4/06 |
| SUBMITTED | | |
| APPROVED | | |
| APPROVED | | |
| APPROVED | | |
| APPROVED | | |
| APPROVED | | |
| APPROVED | | |

NATIONAL AERONAUTICS AND SPACE ADMINISTRATION
JOHN F. KENNEDY SPACE CENTER, NASA
KENNEDY SPACE CENTER, FLORIDA

REPLACE PAD FEEDERS AND DUCTS
PADS A AND B

MANHOLE LAYOUTS
PAD B – SHEET 1

FILE NO. | SIZE F | DWG. NO. 79K36517 | A
PROJ. NO. PCN 97396 | SHEET 13

FILE: MHDET05 REV A.DWG
THIS DRAWING PREPARED BY AutoCAD 2005

E11

KSC FORM 1-11A (REV 6/91) (C/G 12/93)

NOTICE – WHEN GOVERNMENT DRAWINGS, SPECIFICATIONS, OR OTHER DATA ARE USED FOR ANY PURPOSE OTHER THAN IN CONNECTION WITH A DEFINITELY RELATED GOVERNMENT PROCUREMENT OPERATION, THE UNITED STATES GOVERNMENT THEREBY INCURS NO RESPONSIBILITY NOR ANY OBLIGATION WHATSOEVER; AND THE FACT THAT THE GOVERNMENT MAY HAVE FORMULATED, FURNISHED, OR IN ANY WAY SUPPLIED THE SAID DRAWINGS, SPECIFICATIONS, OR OTHER DATA IS NOT TO BE REGARDED BY IMPLICATION OR OTHERWISE AS IN ANY MANNER LICENSING THE HOLDER OR ANY OTHER PERSON OR CORPORATION, OR CONVEYING ANY RIGHTS OR PERMISSION TO MANUFACTURE, USE, OR SELL ANY PATENTED INVENTION THAT MAY IN ANY WAY BE RELATED THERETO.

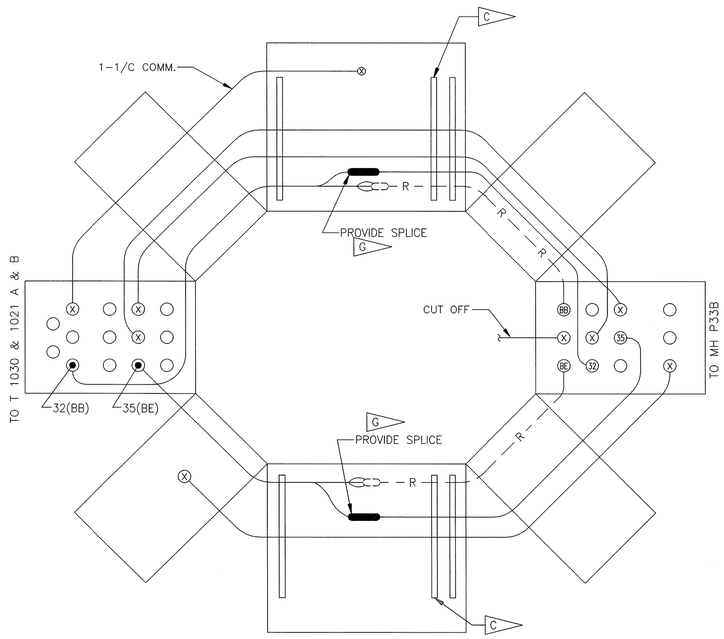


MANHOLE P35B (BF / E6)
NOT TO SCALE

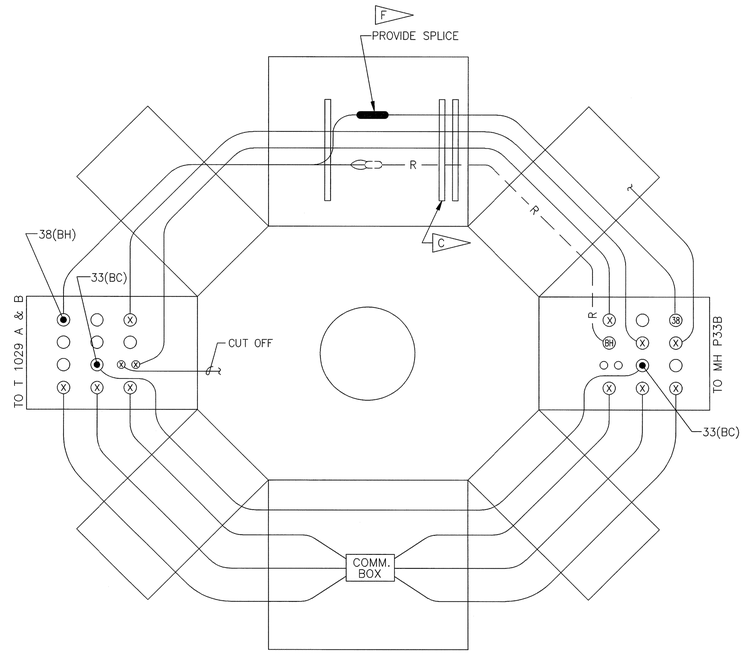


MANHOLE P34B (BG / E6)
NOT TO SCALE

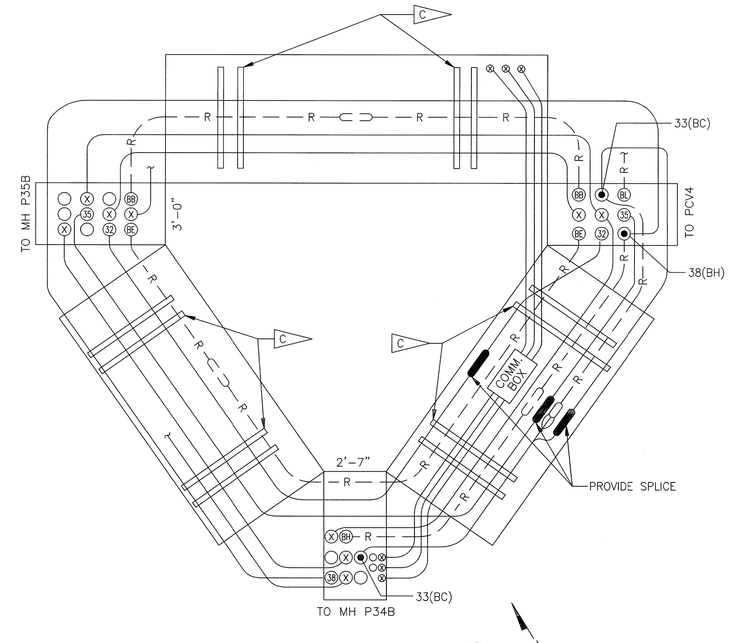


MANHOLE P33B (BH / E6)
NOT TO SCALE

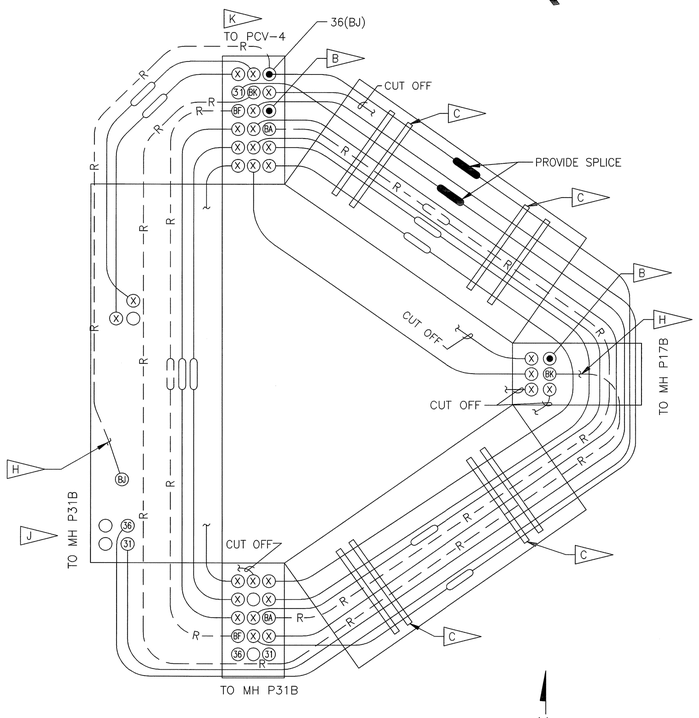


MANHOLE P32B (BJ / E6)
NOT TO SCALE

SPECIFIC NOTES:

A. FOR GENERAL NOTES AND LEGEND, SEE DRAWING V2.

B. CABLE SCHEDULED TO BE REMOVED ON PCN 96702.

C. PROVIDE CABLE RACK AND RACK ARMS. SEE DETAIL E/E15.

D. NOT USED

E. PROVIDE CABLE TAGS ON ALL NEW CABLES. SEE CIRCUIT IDENTIFICATION TAG DETAIL R/V2.

F. SPLICE CABLE (38) TO EXISTING EPR CABLE (BH) IN MANHOLE P34B.

G. SPLICE CABLE (32) TO EXISTING EPR CABLE (BB) AND CABLE (35) TO EXISTING CABLE (BE) IN MANHOLE P35B.

H. CUT CABLE BACK SO IT EXTENDS 500MM FROM DUCT ENTRANCE INTO MANHOLE. SEAL ENDS OF PILC CABLE TO PREVENT ANY OIL LEAKAGE FROM CABLE.

J. PROVIDE DUCT ENTRY INTO MANHOLE. SEE DETAIL D/E15.

K. REMOVE CABLES (BA), (BF), (BJ) AND (BK) FROM MH P32B TO PCV-4 USING THE "JAMMED CABLE REMOVAL" PROCEDURE PER SPECIFICATIONS.

| SYM. | ZONE | DESCRIPTION | DATE | APPROVED |
|---|---|---|---|---|
| 4 | | REVISED SHEETS 1-18, M. B. P. | 09/09 | |

Fred Wilson & Associates, Inc.
Consulting Engineers
C.A. NO. 7188 • 904-398-8636
3970 Hendricks Avenue • Jacksonville, FL 32207

| SIGNATURES | | DATE |
|---|---|---|
| DESIGNED | V.R.K. | 4/06 |
| DRAWN | R.M.L. | 4/06 |
| CHECKED | A.M.R. | 4/06 |
| SUBMITTED | | |
| APPROVED | | |
| APPROVED | | |
| APPROVED | | |
| APPROVED | | |
| APPROVED | | |
| APPROVED | | |

NATIONAL AERONAUTICS AND SPACE ADMINISTRATION
JOHN F. KENNEDY SPACE CENTER, NASA
KENNEDY SPACE CENTER, FLORIDA

REPLACE PAD FEEDERS AND DUCTS
PADS A AND B

MANHOLE LAYOUTS
PAD B – SHEET 2

FILE NO. | SIZE F | DWG. NO. 79K36517 | A
PROJ. NO. PCN 97396 | SHEET 14

FILE: MHDET06 REV A.DWG
THIS DRAWING PREPARED BY AutoCAD 2005

E12

KSC FORM 1-11A (REV 6/91) (C/G 12/93)

NOTICE – WHEN GOVERNMENT DRAWINGS, SPECIFICATIONS, OR OTHER DATA ARE USED FOR ANY PURPOSE OTHER THAN IN CONNECTION WITH A DEFINITELY RELATED GOVERNMENT PROCUREMENT OPERATION, THE UNITED STATES GOVERNMENT THEREBY INCURS NO RESPONSIBILITY NOR ANY OBLIGATION WHATSOEVER; AND THE FACT THAT THE GOVERNMENT MAY HAVE FORMULATED, FURNISHED, OR IN ANY WAY SUPPLIED THE SAME IS NOT TO BE REGARDED BY IMPLICATION OR OTHERWISE AS IN ANY MANNER LICENSING THE HOLDER OR ANY OTHER PERSON OR CORPORATION, OR CONVEYING ANY RIGHTS OR PERMISSION TO MANUFACTURE, USE, OR SELL ANY PATENTED INVENTION THAT MAY IN ANY WAY BE RELATED THEREETO.

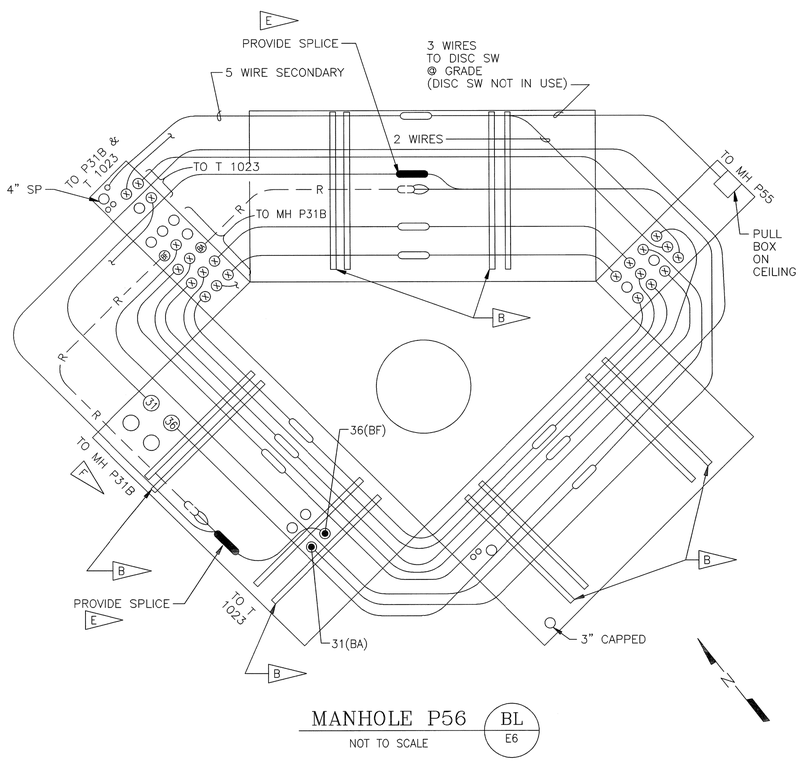


MANHOLE P56 BL E6
NOT TO SCALE

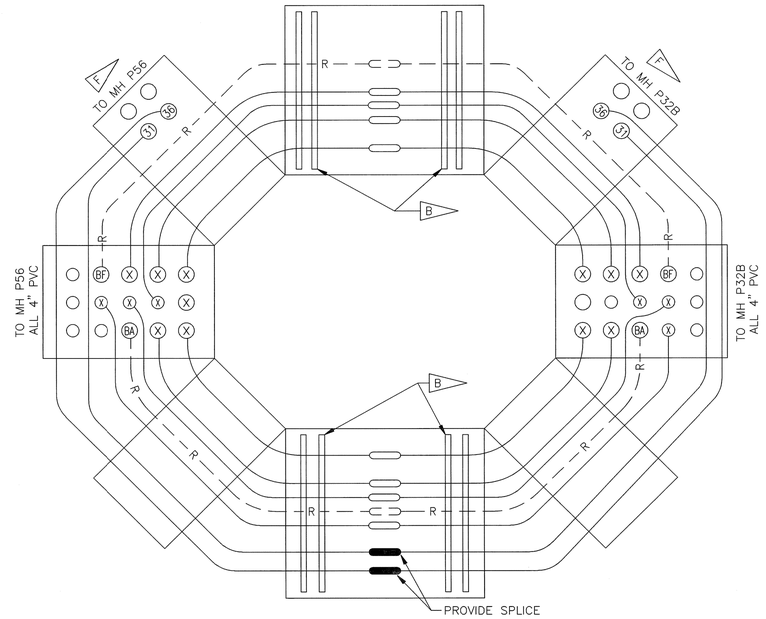


MANHOLE P31B BM E6
NOT TO SCALE
N

SPECIFIC NOTES:

A. FOR GENERAL NOTES AND LEGEND, SEE DRAWING V2.

B. PROVIDE CABLE RACK AND RACK ARMS. SEE DETAIL E/E15.

C. NOT USED

D. PROVIDE CABLE TAGS ON ALL NEW CABLES. SEE CIRCUIT IDENTIFICATION TAG DETAIL R/V2.

E. SPLICE CABLE (36) TO EXISTING EPR CABLE (BF) AND CABLE (31) TO EXISTING EPR CABLE (BA) IN MANHOLE P56.

F. PROVIDE DUCT ENTRY INTO MANHOLE. SEE DETAIL D/E15.

| SYM. | ZONE | DESCRIPTION | DATE | APPROVED |
|---|---|---|---|---|
| 3 | | REVISED SHEETS 1–18, M. B. P. | 09/09 | |

Fred Wilson & Associates, Inc.
Consulting Engineers
C.A. NO. 7188 • 904-398-8636
3970 Hendricks Avenue • Jacksonville, FL 32207

| SIGNATURES | | DATE |
|---|---|---|
| DESIGNED | V.R.K. | 4/06 |
| DRAWN | R.M.L. | 4/06 |
| CHECKED | A.M.R. | 4/06 |
| SUBMITTED | | |
| APPROVED | | |
| APPROVED | | |
| APPROVED | | |
| APPROVED | | |
| APPROVED | | |
| APPROVED | | |

NATIONAL AERONAUTICS AND SPACE ADMINISTRATION
JOHN F. KENNEDY SPACE CENTER, NASA
KENNEDY SPACE CENTER, FLORIDA

REPLACE PAD FEEDERS AND DUCTS
PADS A AND B

MANHOLE LAYOUTS
PAD B – SHEET 3

FILE NO. | SIZE F | DWG. NO. 79K36517 | A
PROJ. NO. PCN 97396 | SHEET 15

FILE: MHDET07 REV A.DWG
THIS DRAWING PREPARED BY AutoCAD 2005

E13

KSC FORM 1–11A (REV 6/91) (C/G 12/93)

NOTICE – WHEN GOVERNMENT DRAWINGS, SPECIFICATIONS, OR OTHER DATA ARE USED FOR ANY PURPOSE OTHER THAN IN CONNECTION WITH A DEFINITELY RELATED GOVERNMENT PROCUREMENT OPERATION, THE UNITED STATES GOVERNMENT THEREBY INCURS NO RESPONSIBILITY NOR ANY OBLIGATION WHATSOEVER; AND THE FACT THAT THE GOVERNMENT MAY HAVE FORMULATED, FURNISHED, OR IN ANY WAY SUPPLIED THE SAID DRAWINGS, SPECIFICATIONS, OR OTHER DATA IS NOT TO BE REGARDED BY IMPLICATION OR OTHERWISE AS IN ANY MANNER LICENSING THE HOLDER OR ANY OTHER PERSON OR CORPORATION, OR CONVEYING ANY RIGHTS OR PERMISSION TO MANUFACTURE, USE, OR SELL ANY PATENTED INVENTION THAT MAY IN ANY WAY BE RELATED THERETO.

SPECIFIC NOTES:

A. FOR GENERAL NOTES AND LEGEND, SEE DRAWING V2.

B. CABLE SCHEDULED TO BE REMOVED ON PCN 96702.

C. PROVIDE CABLE TAGS ON ALL NEW CABLE. SEE CIRCUIT IDENTIFICATION TAG DETAIL R/V2.

D. PROVIDE RACK AND RACK ARMS. SEE DETAIL E/E15.

E. CUT CABLE BACK SO IT EXTENDS 12" FROM THE DUCT ENTRANCE INTO MANHOLE. SEAL ENDS OF PILC CABLE TO PREVENT OIL LEAKAGE FROM CABLE.

F. REMOVE CABLES (BA), (BF), (BJ) AND (BK) FROM MH P32B TO PCV-4 USING THE "JAMMED CABLE REMOVAL" PROCEDURE PER SPECIFICATIONS.

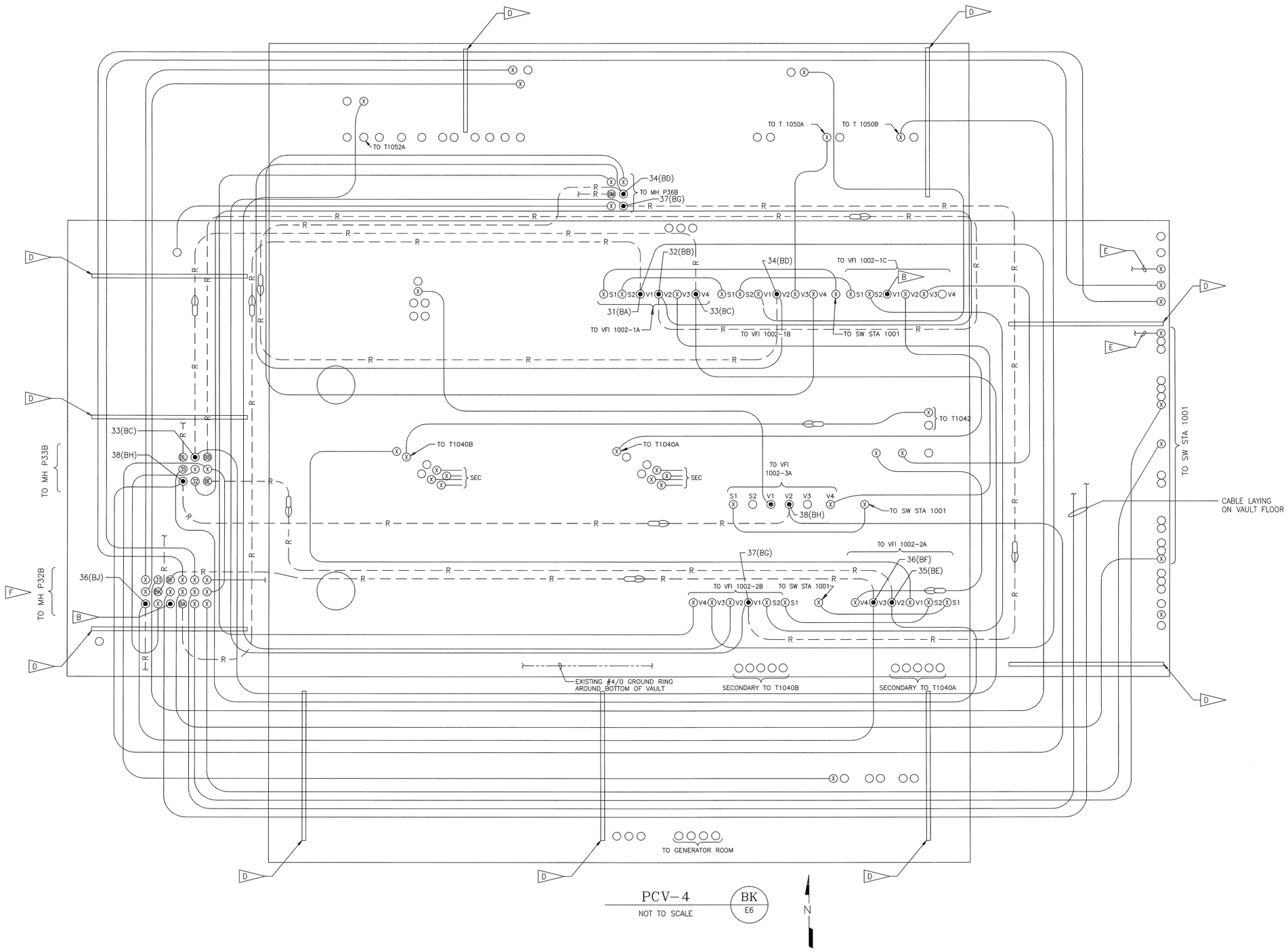


PCV-4 (BK, E6)
NOT TO SCALE

N

| SYM. | ZONE | DESCRIPTION | DATE | APPROVED |
|---|---|---|---|---|
| 3 | | REVISED SHEETS 1–18, M. B. P. | 09/09 | |

Fred Wilson & Associates, Inc.
Consulting Engineers
C.A. NO. 7188 • 904-398-8636
3970 Hendricks Avenue • Jacksonville, FL 32207

| SIGNATURES | | DATE |
|---|---|---|
| DESIGNED | V.R.K. | 4/06 |
| DRAWN | R.M.L. | 4/06 |
| CHECKED | A.M.R. | 4/06 |
| SUBMITTED | | |
| APPROVED | | |
| APPROVED | | |
| APPROVED | | |
| APPROVED | | |
| APPROVED | | |
| APPROVED | | |

NATIONAL AERONAUTICS AND SPACE ADMINISTRATION
JOHN F. KENNEDY SPACE CENTER, NASA
KENNEDY SPACE CENTER, FLORIDA

REPLACE PAD FEEDERS AND DUCTS
PADS A AND B

MANHOLE LAYOUTS
PAD B – SHEET 4

FILE NO. | SIZE F | DWG. NO. 79K36517 | A
PROJ. NO. PCN 97396 | SHEET 16

FILE: MHDET0B REV A.DWG
THIS DRAWING PREPARED BY AutoCAD 2005

E14

KSC FORM 1-11A (REV 6/91) (C/G 12/93)

NOTICE – WHEN GOVERNMENT DRAWINGS, SPECIFICATIONS, OR OTHER DATA ARE USED FOR ANY PURPOSE OTHER THAN IN CONNECTION WITH A DEFINITELY RELATED GOVERNMENT PROCUREMENT OPERATION, THE UNITED STATES GOVERNMENT THEREBY INCURS NO RESPONSIBILITY NOR ANY OBLIGATION WHATSOEVER; AND THE FACT THAT THE GOVERNMENT MAY HAVE FORMULATED, FURNISHED, OR IN ANY WAY SUPPLIED THE SAID DRAWINGS, SPECIFICATIONS, OR OTHER DATA IS NOT TO BE REGARDED BY IMPLICATION OR OTHERWISE AS IN ANY MANNER LICENSING THE HOLDER OR ANY OTHER PERSON OR CORPORATION, OR CONVEYING ANY RIGHTS OR PERMISSION TO MANUFACTURE, USE, OR SELL ANY PATENTED INVENTION THAT MAY IN ANY WAY BE RELATED THERETO.

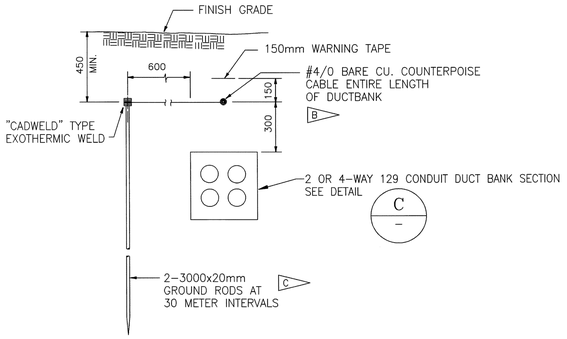


DUCT BANK GROUNDING DETAIL (A / –)
NOT TO SCALE

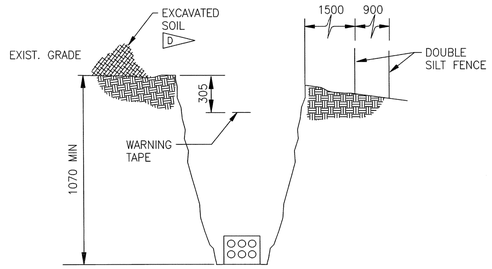


TRENCH DUCT BANK EXCAVATION DETAIL (B / E5)
NOT TO SCALE

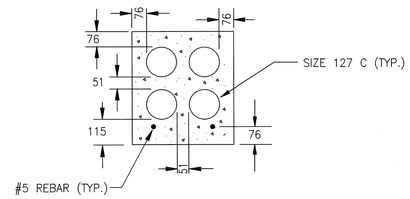


4-WAY DUCT BANK SECTION (C / E5, E6)
NOT TO SCALE

## SPECIFIC NOTES:

A. FOR GENERAL NOTES AND LEGEND, SEE DRAWING V2.

B. RUN COUNTERPOISE AROUND MANHOLES AND CONNECT TO OTHER DUCT BANK COUNTERPOISE. IF NO OTHER DUCT BANK, TERMINATE WITH 2-3000 X 20 GROUND RODS.

C. PROVIDE GROUND RODS AS SHOWN ON DETAIL A (THIS SHEET) AT 30M INTERVALS FOR THE ENTIRE LENGTH OF DUCT BANK.

D. LOCATE EXCAVATED SOIL UPGRADE FROM TRENCH.

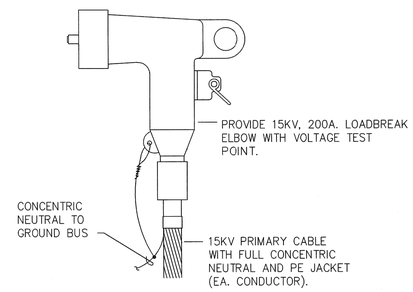


15KV, 200A. LOADBREAK ELBOW DETAIL (S / –)
NOT TO SCALE

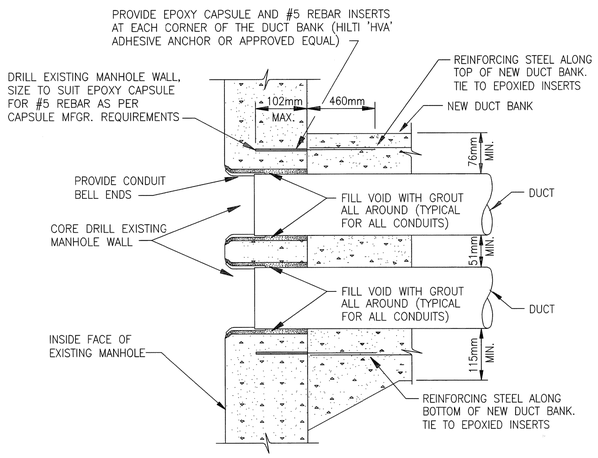


TYPICAL DUCT ENTRANCE TO EXISTING MANHOLE DETAIL (D / E5, E10, E12, E13)
NOT TO SCALE

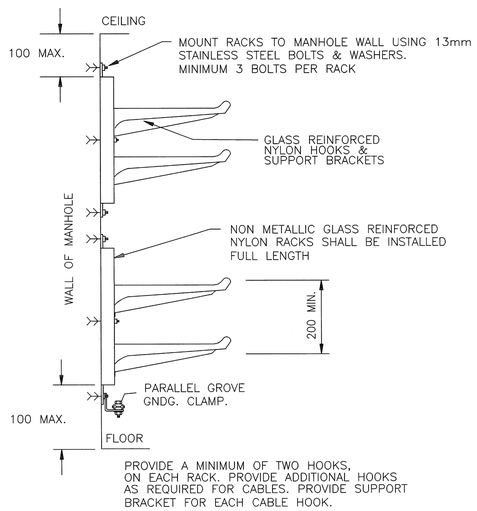


CABLE RACK INSTALLATION IN MANHOLES (E / E8, E9, E10, E11, E12, E13)
NOT TO SCALE

| SYM. | ZONE | DESCRIPTION | DATE | APPROVED |
|---|---|---|---|---|
| 3 | | REVISED SHEETS 1–18, M. B. P. | 09/09 | |

Fred Wilson & Associates, Inc. — Consulting Engineers — C.A. NO. 7188 • 904-398-8636 — 3970 Hendricks Avenue • Jacksonville, FL 32207

| SIGNATURES | | DATE |
|---|---|---|
| DESIGNED | V.R.K. | 10/05 |
| DRAWN | R.M.L. | 10/05 |
| CHECKED | A.M.R. | 10/05 |
| SUBMITTED | | |
| APPROVED | | |
| APPROVED | | |
| APPROVED | | |
| APPROVED | | |
| APPROVED | | |
| APPROVED | | |

NATIONAL AERONAUTICS AND SPACE ADMINISTRATION
JOHN F. KENNEDY SPACE CENTER, NASA
KENNEDY SPACE CENTER, FLORIDA

REPLACE PAD FEEDERS AND DUCTS PADS A AND B

MISCELLANEOUS DETAILS SHEET 1

FILE NO. | SIZE F | DWG. NO. 79K36517 | A
PROJ. NO. PCN 97396 | SHEET 17

FILE: MISC-DET REV A.DWG
THIS DRAWING PREPARED BY AutoCAD 2005
E15

NOTICE – WHEN GOVERNMENT DRAWINGS, SPECIFICATIONS, OR OTHER DATA ARE USED FOR ANY PURPOSE OTHER THAN IN CONNECTION WITH A DEFINITELY RELATED GOVERNMENT PROCUREMENT OPERATION, THE UNITED STATES GOVERNMENT THEREBY INCURS NO RESPONSIBILITY NOR ANY OBLIGATION WHATSOEVER; AND THE FACT THAT THE GOVERNMENT MAY HAVE FORMULATED, FURNISHED, OR IN ANY WAY SUPPLIED THE SAID DRAWINGS, SPECIFICATIONS, OR OTHER DATA IS NOT TO BE REGARDED BY IMPLICATION OR OTHERWISE AS IN ANY MANNER LICENSING THE HOLDER OR ANY OTHER PERSON OR CORPORATION, OR CONVEYING ANY RIGHTS OR PERMISSION TO MANUFACTURE, USE, OR SELL ANY PATENTED INVENTION THAT MAY IN ANY WAY BE RELATED THERETO.

## EXISTING CABLE SCHEDULE

| | CABLE ID | VOLT | FEEDER | SIZE | FROM | TO | REMARKS | |
|---|---|---|---|---|---|---|---|---|
| | A–Z | – | – | – | – | – | NOT USED | |
| PAD A | AA | 13.8KV | 612 | 3–1/C #4/0 EPR/1–3/C #2/0 PILC | SS902–3B | T926A | REMOVE FROM SS902 TO MH P37 | D |
| PAD A | AB | 13.8KV | 612 | 3–1/C #4/0 EPR/1–3/C #2/0 PILC | SS902–4B | T925A | REMOVE | |
| PAD A | AC | 13.8KV | 612 | 3–1/C #4/0 EPR/1–3/C #2/0 PILC | SS902–5A | T921A | REMOVE FROM SS902 TO MH P35 | |
| PAD A | AD | 13.8KV | 612 | 3–1/C #4/0 EPR/1–3/C #2/0 PILC | SS902–7B | T922A | REMOVE FROM SS902 TO MH P31 | B |
| PAD A | AE | 13.8KV | 518 | 3–1/C #4/0 EPR/1–3/C #2/0 PILC | SS902–9B | T920B | REMOVE FROM SS902 TO MH P34 | |
| PAD A | AF | 13.8KV | 606 | 3–1/C #4/0 EPR/1–3/C #2/0 PILC | SS902–12A | T920A | REMOVE FROM SS902 TO MH P34 | |
| PAD A | AG | 13.8KV | 606 | 3–1/C #4/0 EPR/1–3/C #2/0 PILC | SS902–12B | T922B | REMOVE FROM SS902 TO MH P31 | B |
| PAD A | AH | 13.8KV | 606 | 3–1/C #4/0 EPR/1–3/C #2/0 PILC | SS902–14A | T926B | REMOVE FROM SS902 TO MH P37 | D |
| PAD A | AJ | 13.8KV | 606 | 3–1/C #4/0 EPR/1–3/C #2/0 PILC | SS902–15B | T925B | REMOVE | C |
| PAD A | AK | 13.8KV | 606 | 3–1/C #4/0 EPR/1–3/C #2/0 PILC | SS902–16B | T921B | REMOVE FROM SS902 TO MH P35 | C |
| PAD A | AL | 13.8KV | ABND | 1–3/C 350 KCMIL PILC | PCV–1 | PCV–2 | REMOVE FROM PCV–2 TO MH P32 | B |
| | AM–AZ | – | – | – | – | – | NOT USED | |
| PAD B | BA | 13.8KV | 612 | 3–1/C #4/0 EPR/1–3/C #2/0 PILC | VFI 1002 (BUS1A)–V1 | T1023A | REMOVE FROM SS1002 TO MH P56 | |
| PAD B | BB | 13.8KV | 612 | 3–1/C #4/0 EPR/1–3/C #2/0 PILC | VFI 1002 (BUS1A)–V2 | T1021A | REMOVE FROM SS1002 TO MH P35B | |
| PAD B | BC | 13.8KV | 612 | 3–1/C #4/0 EPR/1–3/C #2/0 PILC | VFI 1002 (BUS1A)–V4 | T1029A | REMOVE FROM SS1002 TO MH P33B | |
| PAD B | BD | 13.8KV | 612 | 3–1/C #4/0 EPR/1–3C #2/0 PILC | VFI 1002 (BUS1B)–V2 | T1031A | REMOVE | |
| PAD B | BE | 13.8KV | 606 | 3–1/C #4/0 EPR/1–3/C 350 PILC | VFI 1002 (BUS2A)–V2 | T1021B | REMOVE FROM SS1002 TO MH P35B | |
| PAD B | BF | 13.8KV | 606 | 3–1/C #4/0 EPR/1–3/C #2/0 PILC | VFI 1002 (BUS2A)–V3 | T1023B | REMOVE FROM SS1002 TO MH P56 | |
| PAD B | BG | 13.8KV | 606 | 3–1/C #4/0 EPR/1–3/C #2/0 PILC | VFI 1002 (BUS2B)–V1 | T1032B | REMOVE FROM SS1002 TO MH P37B | |
| PAD B | BH | 13.8KV | 518 | 3–1/C #4/0 EPR/1–3/C #2/0 PILC | VFI 1002 (BUS3)–V2 | T1029B | REMOVE FROM SS1002 TO MH P34B | |
| | BJ | 600V | ABND | – | – | – | REMOVE FROM PCV–4 TO MH P32B | |
| | BK | 600V | ABND | – | – | – | REMOVE FROM PCV–4 TO MH P32B | |
| | BL | 600V | ABND | – | – | – | REMOVE FROM PCV–4 TO MH P33B | |
| | BM | 600V | ABND | – | – | – | REMOVE FROM PCV–4 TO MH P36B | |

## NEW CABLE SCHEDULE

| | CABLE ID | VOLT | FEEDER | SIZE | FROM | TO | REMARKS A |
|---|---|---|---|---|---|---|---|
| PAD A | 1 | 13.8KV | 612 | 3–1/C #4/0 EPR FULL NEUTRAL | SS902–3B | T926A | SPLICE IN MH P37 |
| PAD A | 2 | 13.8KV | 612 | 3–1/C #4/0 EPR FULL NEUTRAL | SS902–4B | T925A | – |
| PAD A | 3 | 13.8KV | 612 | 3–1/C #4/0 EPR FULL NEUTRAL | SS902–5A | T921A | SPLICE IN MH P35 |
| PAD A | 4 | 13.8KV | 612 | 3–1/C #4/0 EPR FULL NEUTRAL | SS902–7B | T922A | SPLICE IN MH P31 |
| PAD A | 5 | 13.8KV | 518 | 3–1/C #4/0 EPR FULL NEUTRAL | SS902–9B | T920B | SPLICE IN MH P34 |
| PAD A | 6 | 13.8KV | 606 | 3–1/C #4/0 EPR FULL NEUTRAL | SS902–12A | T920A | SPLICE IN MH P34 |
| PAD A | 7 | 13.8KV | 606 | 3–1/C #4/0 EPR FULL NEUTRAL | SS902–12B | T922B | SPLICE IN MH P31 |
| PAD A | 8 | 13.8KV | 606 | 3–1/C #4/0 EPR FULL NEUTRAL | SS902–14A | T926B | SPLICE IN MH P37 |
| PAD A | 9 | 13.8KV | 606 | 3–1/C #4/0 EPR FULL NEUTRAL | SS902–15B | T925B | – |
| PAD A | 10 | 13.8KV | 606 | 3–1/C #4/0 EPR FULL NEUTRAL | SS902–16B | T921B | SPLICE IN MH P35 |
| | 11–30 | – | – | – | – | – | NOT USED |
| PAD B | 31 | 13.8KV | 612 | 3–1/C #4/0 EPR FULL NEUTRAL | VFI 1002 (BUS1A)–V1 | T1023A | SPLICE IN MH P56 |
| PAD B | 32 | 13.8KV | 612 | 3–1/C #4/0 EPR FULL NEUTRAL | VFI 1002 (BUS1A)–V2 | T1021A | SPLICE IN MH P35B |
| PAD B | 33 | 13.8KV | 612 | 3–1/C #4/0 EPR FULL NEUTRAL | VFI 1002 (BUS1A)–V4 | T1029A | SPLICE IN MH P33B |
| PAD B | 34 | 13.8KV | 612 | 3–1/C #4/0 EPR FULL NEUTRAL | VFI 1002 (BUS1B)–V2 | T1031A | |
| PAD B | 35 | 13.8KV | 606 | 3–1/C #4/0 EPR FULL NEUTRAL | VFI 1002 (BUS2A)–V2 | T1021B | SPLICE IN MH P35B |
| PAD B | 36 | 13.8KV | 606 | 3–1/C #4/0 EPR FULL NEUTRAL | VFI 1002 (BUS2A)–V3 | T1023B | SPLICE IN MH P56 |
| PAD B | 37 | 13.8KV | 606 | 3–1/C #4/0 EPR FULL NEUTRAL | VFI 1002 (BUS2B)–V1 | T1032B | SPLICE IN MH P37B |
| PAD B | 38 | 13.8KV | 518 | 3–1/C #4/0 EPR FULL NEUTRAL | VFI 1002 (BUS3)–V2 | T1029B | SPLICE IN MH P34B |

**SPECIFIC NOTES:**

A. FOR CIRCUIT IDENTIFICATION TAG DETAILS SEE DETAIL R/V2.

B. THE "JAMMED CABLE REMOVAL" PROCEDURE SHALL BE USED FOR REMOVING CABLES AD, AG AND AL FROM VAULT PCV–2 TO MH P32.

C. THE "JAMMED CABLE REMOVAL" PROCEDURE SHALL BE USED FOR REMOVING CABLES AK AND AJ FROM VAULT PCV–2 TO MH P41A.

D. THE "JAMMED CABLE REMOVAL" PROCEDURE SHALL BE USED FOR REMOVING CABLES AA AND AH FROM VAULT PCV–2 TO MH P36.

E. FOR GENERAL NOTES AND LEGEND, SEE DRAWING V2.

| SYM. | ZONE | DESCRIPTION | DATE | APPROVED |
|---|---|---|---|---|
| A | | REVISED SHEETS 1–18, M. B. P. | 09/09 | 9/30/09 |

Fred Wilson & Associates, Inc.
Consulting Engineers
C.A. NO. 7188 • 904-398-8636
3970 Hendricks Avenue • Jacksonville, FL 32207

| SIGNATURES | | DATE |
|---|---|---|
| DESIGNED | V.R.K. | 03/06 |
| DRAWN | R.M.L. | 03/06 |
| CHECKED | A.M.R. | 03/06 |
| SUBMITTED | | |
| APPROVED | | |
| APPROVED | | |
| APPROVED | | |
| APPROVED | | |
| APPROVED | | |
| APPROVED | | |

NATIONAL AERONAUTICS AND SPACE ADMINISTRATION
JOHN F. KENNEDY SPACE CENTER, NASA
KENNEDY SPACE CENTER, FLORIDA

REPLACE PAD FEEDERS AND DUCTS
PADS A AND B

CABLE SCHEDULE
EXISTING AND MODIFIED

FILE NO. | SIZE F | DWG. NO. 79K36517 | A
PROJ. NO. PCN 97396 | SHEET 18 OF 18

FILE: CBL–SCH REV A.DWG
THIS DRAWING PREPARED BY AutoCAD 2005

E16

KSC FORM 1–11A (REV 6/91) (C/G 12/93)