	NAME	DATE
DRAWN BY	KDH	05/18/09
CHECKED	TLW	05/18/09
ENGINEER	RJM	05/18/09
REVIEWED		
SALES ORDER NO.	09-2584	
EDR NO.		

PHPK Technologies

COLUMBUS, OHIO

RELEASE DATE: 05/18/09

DRAWING TITLE: STENNIS SPACE CENTER, A-2 TEST STAND 12" x 16" NPS, V.J. LH2 TRANSFER PIPING

DRAWING NO:	SHEET 1 OF 2
09-2584-BM-5000	
REVISION LETTER:	D
PART NUMBER	09-2584-5000
NO. REQUIRED	
NEXT ASSEMBLY	

REVISIONS

REV.	DATE	EDR	DWN	CHK	ENG	RVW	DESCRIPTION
A	06/17/09	4050	BTH	RSB	RJM		FIRST OFFICIAL RELEASE
B	10/26/09	4233	KDH	RJM	RJM	RSB	1) ADDED ITEM. 2) DELETED ITEM. 3) INCREASED QTY. 4) DECREASED QTY. 5) CHANGED DESCRIP/MATL.
C	02/16/10		KDH	RJM	RJM	RSB	1) ADDED ITEM. 2) DELETED ITEM. 3) INCREASED QTY. 4) DECREASED QTY. 5) CHANGED DESCRIP/MATL. 6) REVISED PART NUMBER
D	03/15/10		KDH	RJM	RJM	RSB	1) ADDED ITEM. 2) DELETED ITEM. 3) INCREASED QTY. 4) DECREASED QTY. 5) CHANGED DESCRIP/MATL.

BILL OF MATERIAL

PROCUREMENT NOTES

REV.	HEAT NO.	ITEM NO.	PART NUMBER	DESCRIPTION	MATERIAL	SEE NOTES	UNITS	BAL.	ADV. PROC.	REQ'D.	SL	5000
										TOTAL NO. ASSY'S.	1	1
		1	09-2584-5001	STENNIS SPACE CENTER, A-2 TEST STAND 12" x 16" NPS, V.J. LH2 TRANSFER PIPING	SST		EA	-1		1		1
		2	09-2584-5002	STENNIS SPACE CENTER, A-2 TEST STAND 12" x 16" NPS, V.J. LH2 TRANSFER PIPING	SST		EA	-1		1		1
		3	09-2584-5003	STENNIS SPACE CENTER, A-2 TEST STAND 12" x 16" NPS, V.J. LH2 TRANSFER PIPING	SST		EA	-1		1		1
		4	09-2584-5004	STENNIS SPACE CENTER, A-2 TEST STAND 12" x 16" NPS, V.J. LH2 TRANSFER PIPING	SST		EA	-1		1		1
		5	09-2584-5005	STENNIS SPACE CENTER, A-2 TEST STAND 12" x 16" NPS, V.J. LH2 TRANSFER PIPING	SST		EA	-1		1		1
		6	09-2584-5006	STENNIS SPACE CENTER, A-2 TEST STAND 12" x 16" NPS, V.J. LH2 TRANSFER PIPING	SST		EA	-1		1		1
		7	09-2584-5007	STENNIS SPACE CENTER, A-2 TEST STAND 12" x 16" NPS, V.J. LH2 TRANSFER PIPING	SST		EA	-1		1		1
		8	09-2584-5008	STENNIS SPACE CENTER, A-2 TEST STAND 12" x 16" NPS, V.J. LH2 TRANSFER PIPING	SST		EA	-1		1		1
		9	09-2584-5009	STENNIS SPACE CENTER, A-2 TEST STAND 12" x 16" NPS, V.J. LH2 TRANSFER PIPING	SST		EA	-1		1		1
		10	09-2584-5010	STENNIS SPACE CENTER, A-2 TEST STAND 12" x 16" NPS, V.J. LH2 TRANSFER PIPING	SST		EA	-1		1		1
		11	09-2584-5011	STENNIS SPACE CENTER, A-2 TEST STAND 12" x 16" NPS, V.J. LH2 TRANSFER PIPING	SST		EA	-1		1		1
		12	09-2584-5012	STENNIS SPACE CENTER, A-2 TEST STAND 12" x 16" NPS, V.J. LH2 TRANSFER PIPING	SST		EA	-1		1		1
		13	09-2584-5013	STENNIS SPACE CENTER, A-2 TEST STAND 12" x 16" NPS, V.J. LH2 TRANSFER PIPING	SST		EA	-1		1		1
		14	09-2584-5014	STENNIS SPACE CENTER, A-2 TEST STAND 12" x 16" NPS, V.J. LH2 TRANSFER PIPING	SST		EA	-1		1		1
		15	09-2584-5015	STENNIS SPACE CENTER, A-2 TEST STAND 12" x 16" NPS, V.J. LH2 TRANSFER PIPING	SST		EA	-1		1		1
		16	09-2584-5016	STENNIS SPACE CENTER, A-2 TEST STAND 12" x 16" NPS, V.J. LH2 TRANSFER PIPING	SST		EA	-1		1		1
		17	09-2584-5017	STENNIS SPACE CENTER, A-2 TEST STAND 12" x 16" NPS, V.J. LH2 TRANSFER PIPING	SST		EA	-1		1		1
		18	09-2584-5018	STENNIS SPACE CENTER, A-2 TEST STAND 12" x 16" NPS, V.J. LH2 TRANSFER PIPING	SST		EA	-1		1		1
		19	09-2584-5019	STENNIS SPACE CENTER, A-2 TEST STAND 12" x 16" NPS, V.J. LH2 TRANSFER PIPING	SST		EA	-1		1		1
		20	09-2584-5020	STENNIS SPACE CENTER, A-2 TEST STAND 12" x 16" NPS, V.J. LH2 TRANSFER PIPING	SST		EA	-1		1		1
		21	09-2584-5021	STENNIS SPACE CENTER, A-2 TEST STAND 12" x 16" NPS, V.J. LH2 TRANSFER PIPING	SST		EA	-1		1		1
		22	09-2584-5022	STENNIS SPACE CENTER, A-2 TEST STAND 12" x 16" NPS, V.J. LH2 TRANSFER PIPING	SST		EA	-1		1		1
		23	09-2584-5023	STENNIS SPACE CENTER, A-2 TEST STAND 12" x 16" NPS, V.J. LH2 TRANSFER PIPING	SST		EA	-1		1		1
		24	09-2584-5024	STENNIS SPACE CENTER, A-2 TEST STAND 12" x 16" NPS, V.J. LH2 TRANSFER PIPING	SST		EA	-1		1		1
		25	09-2584-5025	STENNIS SPACE CENTER, A-2 TEST STAND 12" x 16" NPS, V.J. LH2 TRANSFER PIPING	SST		EA	-1		1		1
		26	09-2584-5026	STENNIS SPACE CENTER, A-2 TEST STAND 12" x 16" NPS, V.J. LH2 TRANSFER PIPING	SST		EA	-1		1		1

GFE
NOT FOR
CONSTRUCTION

	NAME	DATE
DRAWN BY	KDH	05/18/09
CHECKED	TLW	05/18/09
ENGINEER	RJM	05/18/09
REVIEWED		
SALES ORDER NO.	09-2584	
EDR NO.		

PHPK Technologies

COLUMBUS, OHIO

RELEASE DATE: 05/18/09

DRAWING TITLE: STENNIS SPACE CENTER, A-2 TEST STAND 12" x 16" NPS, V.J. LH2 TRANSFER PIPING

DRAWING NO:	09-2584-BM-5000
SHEET 2 OF 2	
REVISION LETTER:	D
PART NUMBER	09-2584-5000
NO. REQUIRED	
NEXT ASSEMBLY	

REVISIONS

REV.	DATE	EDR	DWN	CHK	ENG	RVW	DESCRIPTION
A	06/17/09	4050	BTH	RSB	RJM		FIRST OFFICIAL RELEASE
B	10/26/09	4233	KDH	RJM	RJM	RSB	1) ADDED ITEM. 2) DELETED ITEM. 3) INCREASED QTY. 4) DECREASED QTY. 5) CHANGED DESCRIP/MATL.
C	02/16/10		KDH	RJM	RJM	RSB	1) ADDED ITEM. 2) DELETED ITEM. 3) INCREASED QTY. 4) DECREASED QTY. 5) CHANGED DESCRIP/MATL. 6) REVISED PART NUMBER
D	03/15/10		KDH	RJM	RJM	RSB	1) ADDED ITEM. 2) DELETED ITEM. 3) INCREASED QTY. 4) DECREASED QTY. 5) CHANGED DESCRIP/MATL.

BILL OF MATERIAL

PROCUREMENT NOTES

REV.	HEAT NO.	ITEM NO.	PART NUMBER	DESCRIPTION	MATERIAL	SEE NOTES	UNITS	BAL.	ADV. PROC.	REQ'D.	SL	5000
										TOTAL NO. ASSY'S.	1	1
		27	09-2584-5027	STENNIS SPACE CENTER, A-2 TEST STAND 12" x 16" NPS, V.J. LH2 TRANSFER PIPING	SST		EA	-1		1		1
		28	09-2584-5028	STENNIS SPACE CENTER, A-2 TEST STAND 12" x 16" NPS, V.J. LH2 TRANSFER PIPING	SST		EA	-1		1		1
B1		29	09-2584-5029	STENNIS SPACE CENTER, A-2 TEST STAND 12" x 16" NPS, V.J. LH2 TRANSFER PIPING	SST		EA	-1		1		1
B4, B5		30	09-2584-5030	CAN CLOSURE ASSEMBLY, 12" x 16" NPS (DETAIL "L")	SST		EA	-17		17		17
		31						0		0		
		32						0		0		
		33	83-210-030	OPERATOR ASSEMBLY	STD. PROD.		EA	-4		4	4	
B3		34	50-023-010	SIEVE PACKS	STD. PROD.		EA	-360		360	360	
B3		35	50-024-010	MYLAR x 1 1/2" WIDE	STD. PROD.		FT	-1500		1500	1500	
B3		36	50-025-010	REEMAY PAPER x 2" WIDE	STD. PROD.		FT	-1500		1500	1500	
		37						0		0		
		38						0		0		
		39	*2584	O-RING 20.955 I.D. X .210W (2-390)	VITON		EA	-4		4	4	
		40	*2584	O-RING 15.955 I.D. X .139W (2-282)	VITON		EA	-4		4	4	
		41						0		0		
		42	*2584	HEX HD CAP SCR, FULL THD 1/2"-13 UNC X 1" LG, STRAIN HARDENED	ASTM A320 GR B8		EA	-64		64	64	
		43						0		0		
B1		44	09-2584-5036	STENNIS SPACE CENTER, A-2 TEST STAND 12" x 16" NPS, V.J. LH2 TRANSFER PIPING	SST		EA	-1		1		1
B1		45	09-2584-5037	STENNIS SPACE CENTER, A-2 TEST STAND 12" x 16" NPS, V.J. LH2 TRANSFER PIPING	SST		EA	-1		1		1
B1		46	09-2584-5038	STENNIS SPACE CENTER, A-2 TEST STAND 12" x 16" NPS, V.J. LH2 TRANSFER PIPING	SST		EA	-1		1		1
B1		47	09-2584-5039	STENNIS SPACE CENTER, A-2 TEST STAND 12" x 16" NPS, V.J. LH2 TRANSFER PIPING	SST		EA	-1		1		1
B1		48	09-2584-5040	STENNIS SPACE CENTER, A-2 TEST STAND 12" x 16" NPS, V.J. LH2 TRANSFER PIPING	SST		EA	-1		1		1
		49						0		0		
C6		50	09-2584-5146	EXP. JOINT ASS'Y., 12" x 29" LG	SST		EA	-10		10		10
C6		51	09-2584-5147	EXP. JOINT ASS'Y., V.J. 20" x 47.25" LG	SST		EA	-10		10		10
C2		52						0		0		
C2		53						0		0		
		54						0		0		
C1		55	09-2584-5041	STENNIS SPACE CENTER, A-2 TEST STAND 12" x 16" NPS, V.J. LH2 TRANSFER PIPING	SST		EA	0		0		
C1		56	09-2584-5042	STENNIS SPACE CENTER, A-2 TEST STAND 12" x 16" NPS, V.J. LH2 TRANSFER PIPING	SST		EA	0		0		
		57						0		0		
		58						0		0		
D1		59	09-2584-5159	LATTERAL OFF-SET EXPANSION JT, 12"	SST		EA	-3		3		3
D1		60	09-2584-5160	LATTERAL OFF-SET EXPANSION JT, 26"	SST		EA	-3		3		3
		61						0		0		
		62						0		0		
		63						0		0		
		64						0		0		
		65						0		0		
		66						0		0		
		67						0		0		

GFE
NOT FOR CONSTRUCTION

-- PHPK TECHNOLOGIES PROPRIETARY --

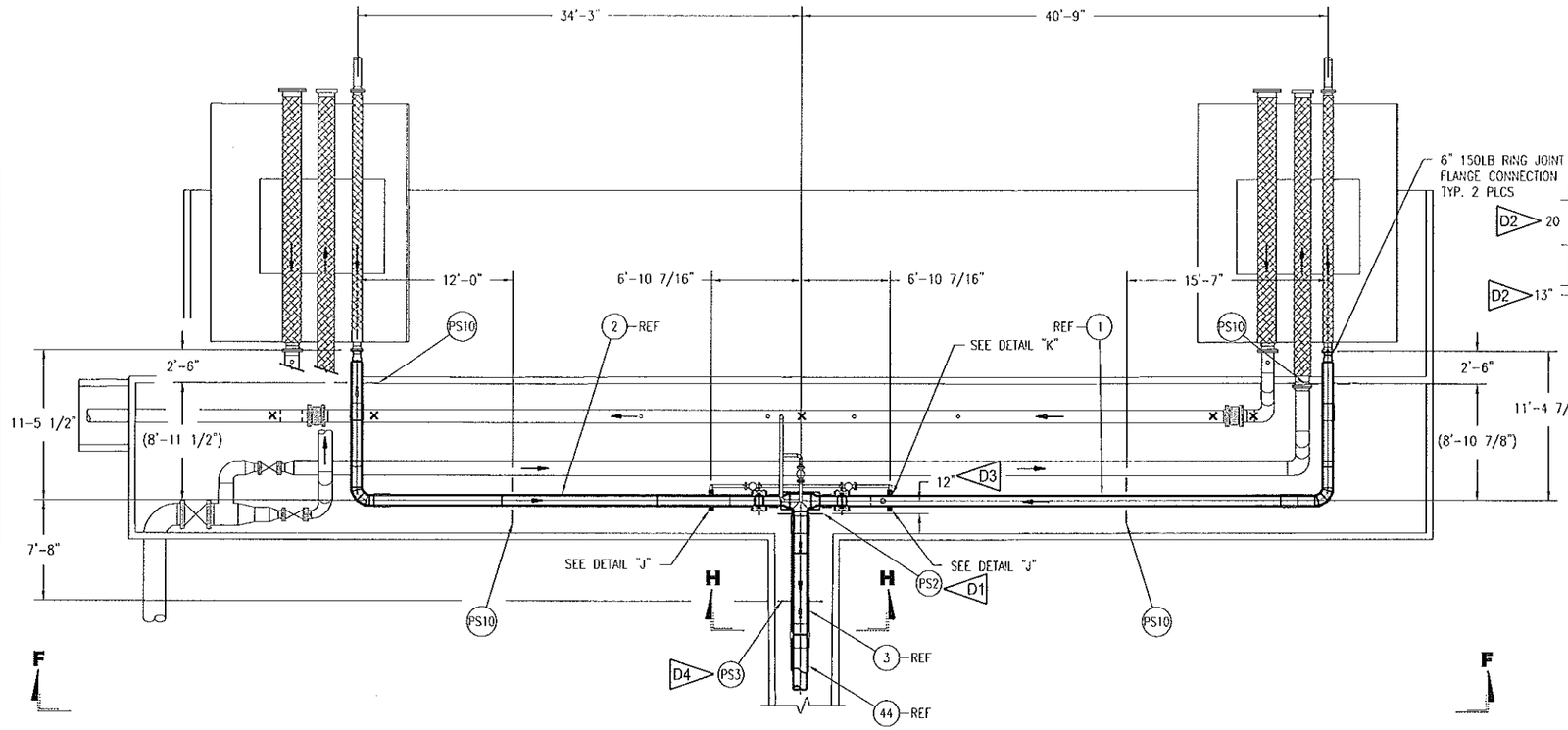

DETAIL "C"
FROM SHT. 1

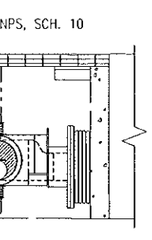

SECTION H-H

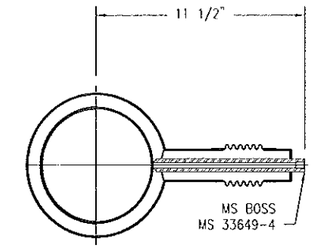

DETAIL "J"
TYP. 2 PLCS

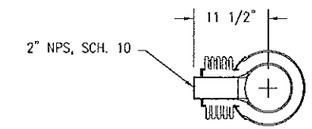

DETAIL "K"
TYP. 2 PLCS

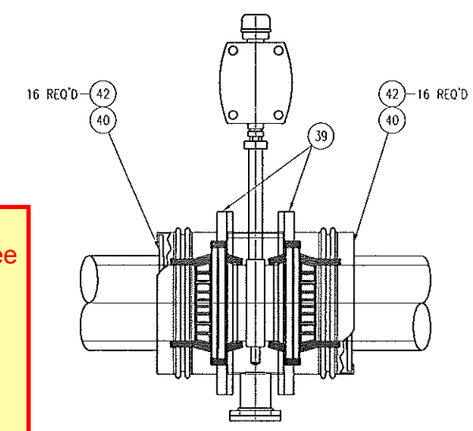

TYPICAL BUTTERFLY VALVE INNER & JACKET CONNECTION DETAIL

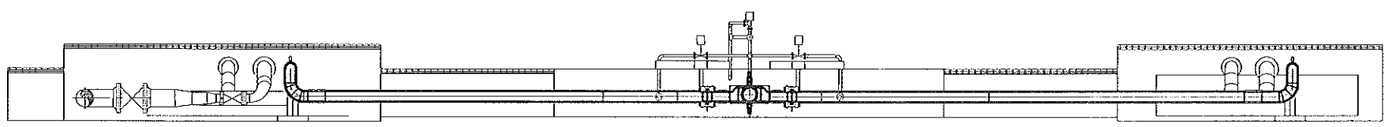

VIEW F-F

Supports shown here for reference only. See contract drawings for pipe support details.

NOT FOR CONSTRUCTION

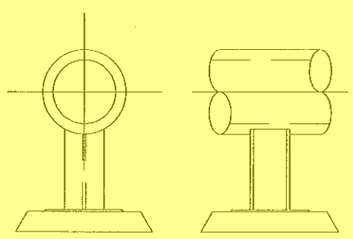

PS-2 ANCHOR

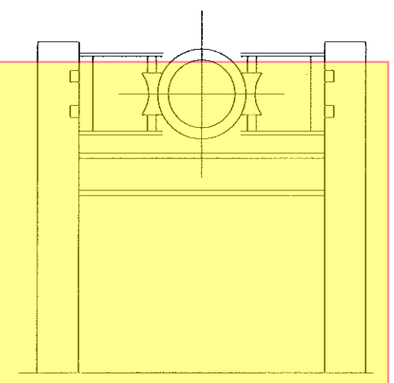

PS-10 GUIDE

REVISIONS

REV	DATE	DWN	CHK'D	ENG'R	RVW'D	EDR	DESCRIPTION
A	06/17/2009	BTH	RSB	RJM		4050	FIRST OFFICIAL RELEASE
B	10/09/2009	KDH	RJM	RJM	RSB		1.) REVISED PER FCR-01
C	10/22/2009	KDH	RJM	RJM	RSB	4233	1.) ADDEED ANCHOR AND GUIDE SUPPORT LOCATIONS, 2.) REVISED DETAIL "J", "K" & SECTION H-H, 3.) REMOVED PS-8 AND PS-9
D	04/01/2010	KDH	RJM	RJM	RSB	4516	1.) ADDED SUPPORT, 2.) REVISED DIMENSION, 3.) ADDED DIMENSION, 4.) WAS PS2

WHERE USED

DRAWN BY	KDH	TOLERANCES	
CHECKED	TLW	FRACTION	± 1/8
ENGINEER	RJM	2 PL XX	± .01
		3 PL XXX	± .005
REVIEWED		ANGULAR	± 1/2°
RELEASE DATE	02/26/2009	4050	EDR NO

DIMENSIONS ARE IN INCHES AND PROVIDED PRIOR TO SURFACE TREATMENTS, UNLESS NOTED.

PHPK TECHNOLOGIES
2111 BUILDERS PLACE
COLUMBUS, OH 43204
614-486-4750 WWW.PHPK.COM

TITLE
STENNIS SPACE CENTER, A-2 TEST STAND
12" X 16" NPS, V.J. LH2 TRANSFER PIPING

SIZE	DRAWING NUMBER	CHG
B	09-2584-5000	D

EST WEIGHT | DWG | SHEET 3 OF 3

-- PHPK TECHNOLOGIES PROPRIETARY --
INFORMATION ON THIS DRAWING MAY NOT BE DISCLOSED TO ANY PARTY WITHOUT WRITTEN AUTHORIZATION FROM PHPK

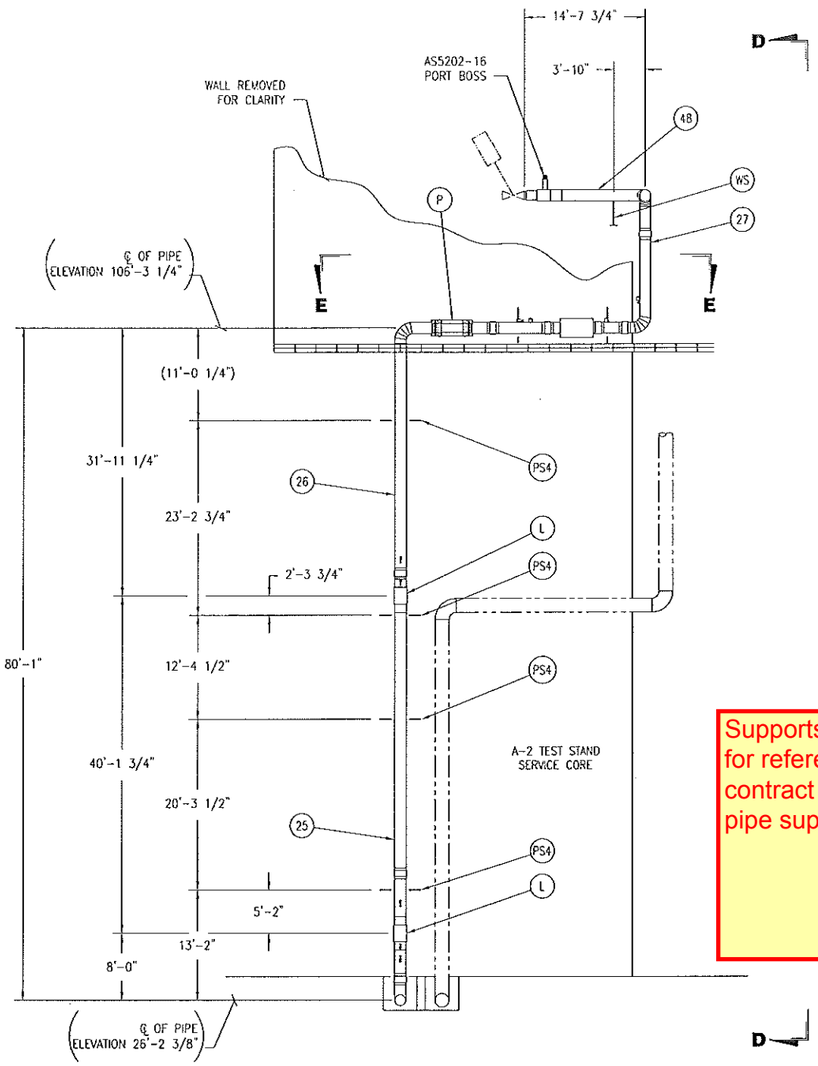

Supports shown here for reference only. See contract drawings for pipe support details.

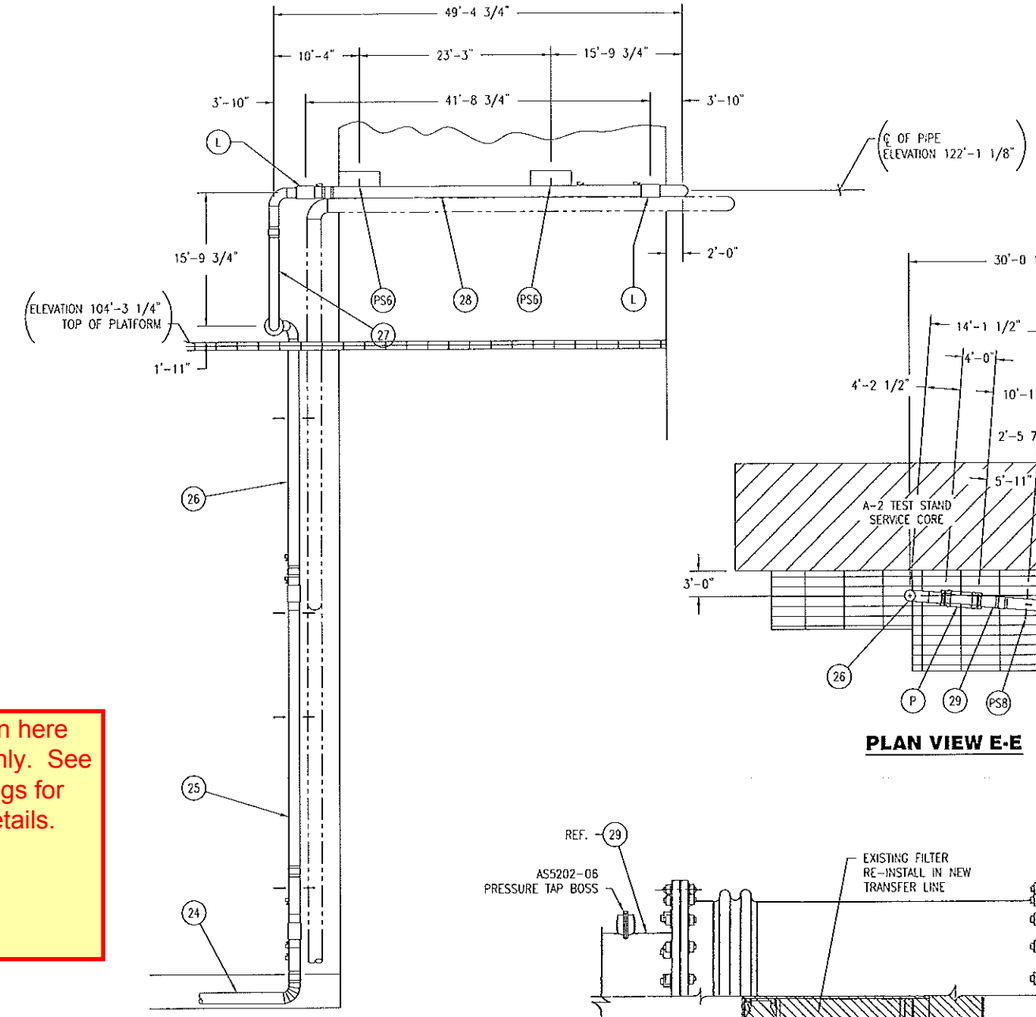

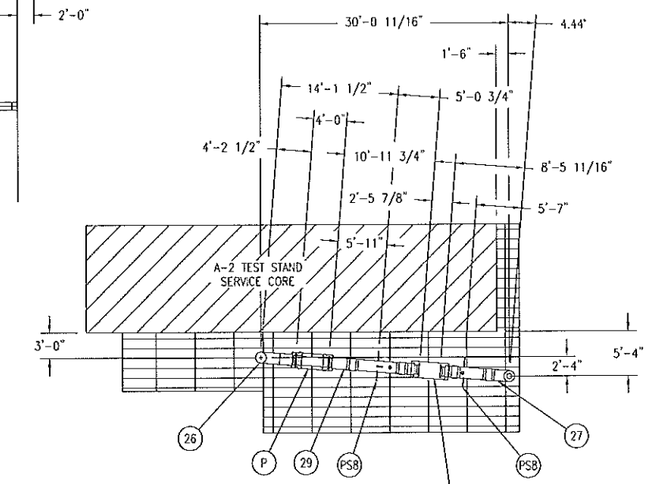

PLAN VIEW E-E

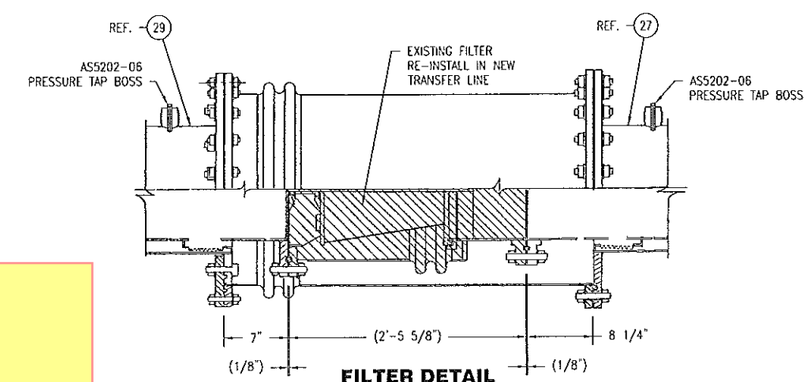

FILTER DETAIL

NOT FOR CONSTRUCTION

ELEVATION VIEW D-D

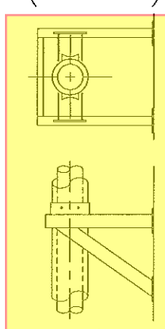

PS-4 GUIDE

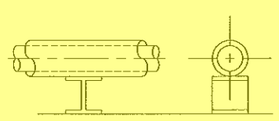

WS WEIGHT SUPPORT

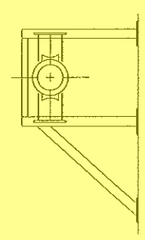

PS-6 GUIDE

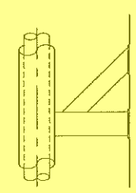

PS-7 ANCHOR

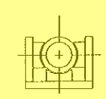

PS-8 GUIDE

REVISIONS

REV	DATE	DWN	CHK'D	ENGR	RV'W'D	EDR	DESCRIPTION
A	06/17/2009	BTH	RSB	RJM		4050	FIRST OFFICIAL RELEASE
B	10/13/2009	KDH	RJM	RJM	RSB		1.) REVISED PER FCR-01
C	10/22/2009	KDH	RJM	RJM	RSB	4233	1.) ADDED GUIDE AND ANCHOR LOCATIONS
D	04/01/2010	KDH	RJM	RJM	RSB	4516	1.) REVISED PER FCR-02
E	04/15/2010	KDH	RJM	RJM	RSB		1.) REVISED PLAN VIEW E-E

WHERE USED

DRAWN BY	KDH	TOLERANCES	
CHECKED	TLW	FRACTION	± 1/8
ENGINEER	RJM	2 PL .XX	± .01
		3 PL .XXX	± .005
REVIEWED		ANGULAR	± 1/2°
RELEASE DATE	05/20/2009	4050	
		EDR NO	

DIMENSIONS ARE IN INCHES AND PROVIDED PRIOR TO SURFACE TREATMENTS, UNLESS NOTED.

PHPK TECHNOLOGIES
2111 BUILDERS PLACE
COLUMBUS, OH 43204
614-486-4750 WWW.PHPK.COM

TITLE
STENNIS SPACE CENTER, A-2 TEST STAND
12" X 16" NPS, V.J. LH2 TRANSFER PIPING

SIZE	DRAWING NUMBER	CHG
B	09-2584-5000	E

EST WEIGHT | DWG | SHEET 2 OF 3

-- PHPK TECHNOLOGIES PROPRIETARY --
INFORMATION ON THIS DRAWING MAY NOT BE DISCLOSED TO ANY PARTY WITHOUT WRITTEN AUTHORIZATION FROM PHPK

REVISIONS

REV	DATE	DWN	CHK'D	ENGR	RVW'D	EDR	DESCRIPTION
A	06/17/2009	BTH	RSB	RJM		4050	FIRST OFFICIAL RELEASE
B	10/06/2009	KDH	RJM	RJM	RSB		1.) REVISED PER FCR-01
C	10/15/2009	KDH	RJM	RJM	RSB		1.) REVISED PER FCR-01
D	10/22/2009	KDH	RJM	RJM	RSB	4233	1.) ADDED GUIDES AND ANCHOR LOCATIONS, 2.) ADDED INSTALLATION NOTES FOR DETAILS "M" & "N"
E	04/01/2010	KDH	RJM	RJM	RSB	4516	1.) REVISED PER FCR-02
F	04/15/2010	KDH	RJM	RJM	RSB		1.) REVISED DIMENSION, 2) MOVED ITEM, 3) ADDED DIMENSION

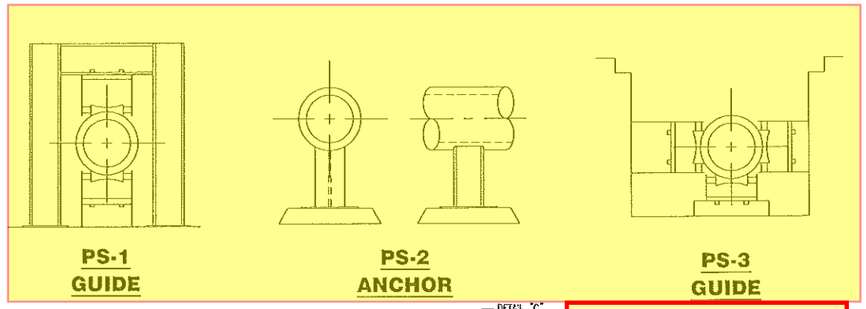

Supports shown here for reference only. See contract drawings for pipe support details.

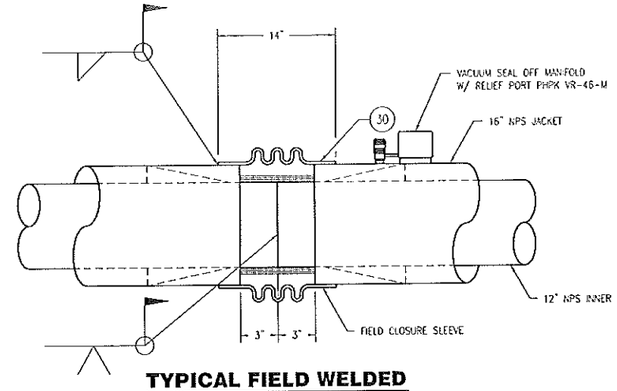

TYPICAL FIELD WELDED CLOSURE DETAIL "L"

TYP. 19 PLCS

FIELD JOINT INSTALLATION PROCEDURE:
1. INSTALL FIELD SLEEVE OVER JACKET PIPE; SLIDE AWAY FROM JOINT.
2. WELD INNER LINE. TEST PER ANSI B31.3.
3. INSTALL 12 PACKS OF MOLECULAR SIEVE AGAINST INNER LINE. SECURE WITH WELD WIRE. PUNCTURE (8) HOLES IN EACH PACK WITH END OF WELD WIRE.
4. SPIRAL WRAP (22) ALTERNATE LAYERS OF MLI MYLAR AROUND INNER LINE PIPE ONLY (FEEMAY PAPER AGAINST INNER PIPE). SECURE WITH MYLAR TAPE.
5. SLIDE CLOSURE SLEEVE INTO POSITION. WELD BOTH ENDS.
6. VACUUM TEST (HELIUM MASS-SPECTROMETER @ 1 x 10^{-9} SENSITIVITY)
7. EVACUATE CLOSURE AND SEAL-OFF VACUUM PUMP-OUT PORT.

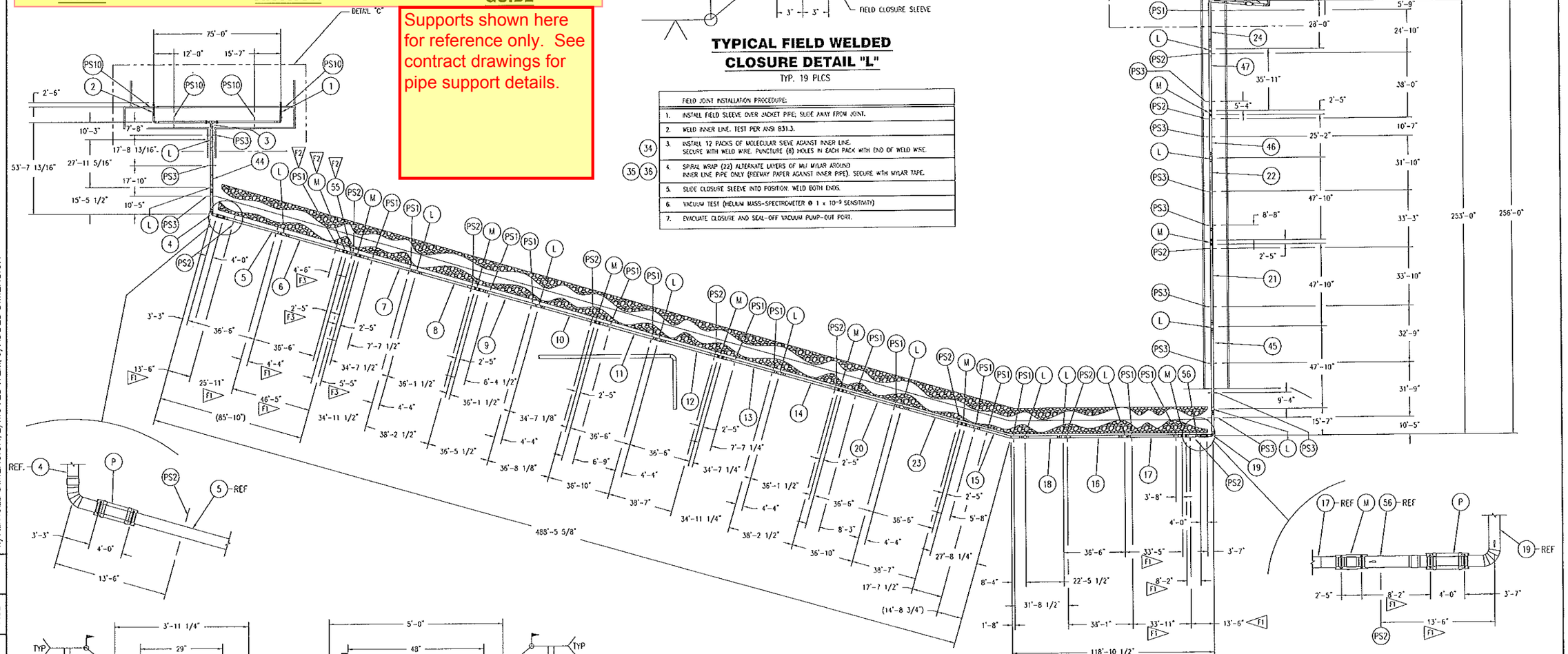

DETAIL "M"

TYP. 10 PLCS

DETAIL "P"

TYP. 3 PLCS

FIELD JOINT INSTALLATION PROCEDURE:
1. INSTALL FIELD SLEEVE OVER JACKET PIPE; SLIDE AWAY FROM JOINT.
2. INSTALL 12 PACKS OF MOLECULAR SIEVE AGAINST INNER LINE. SECURE WITH WELD WIRE. PUNCTURE (8) HOLES IN EACH PACK WITH END OF WELD WIRE.
3. SPIRAL WRAP (22) ALTERNATE LAYERS OF MLI MYLAR AROUND INNER LINE PIPE ONLY (FEEMAY PAPER AGAINST INNER PIPE). SECURE WITH MYLAR TAPE
4. SLIDE CLOSURE SLEEVE INTO POSITION. WELD BOTH ENDS
5. VACUUM TEST (HELIUM MASS-SPECTROMETER @ 1 x 10^{-9} SENSITIVITY).
6. EVACUATE CLOSURE AND SEAL-OFF VACUUM PUMP-OUT PORT.

GENERAL NOTES:

1.) REMOVED

2.) REMOVED

3.) PIPE SUPPORTS ARE BY OTHERS.

-- PHPK TECHNOLOGIES PROPRIETARY --
INFORMATION ON THIS DRAWING MAY NOT BE DISCLOSED TO ANY PARTY WITHOUT WRITTEN AUTHORIZATION FROM PHPK

NOT FOR CONSTRUCTION

WHERE USED

DRAWN BY	KDH	TOLERANCES	
CHECKED	TLW	FRACTION	± 1/8
ENGINEER	RJM	2 PL .XX	± .01
		3 PL .XXX	± .005
REVIEWED		ANGULAR	± 1/2°
RELEASE DATE	05/18/2009	4050 EDR NO	

DIMENSIONS ARE IN INCHES AND PROVIDED PRIOR TO SURFACE TREATMENTS, UNLESS NOTED

PHPK TECHNOLOGIES
2111 BUILDERS PLACE
COLUMBUS, OH 43204
614-486-4750 WWW.PHPK.COM

TITLE
STENNIS SPACE CENTER, A-2 TEST STAND
12" X 16" NPS, V.J. LH2 TRANSFER PIPING

SIZE	DRAWING NUMBER	CHG
B	09-2584-5000	F

EST WEIGHT | DWG | SHEET 1 OF 3

-- PHPK TECHNOLOGIES PROPRIETARY --

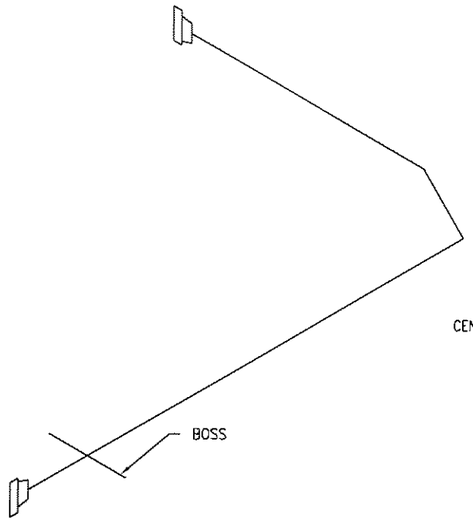

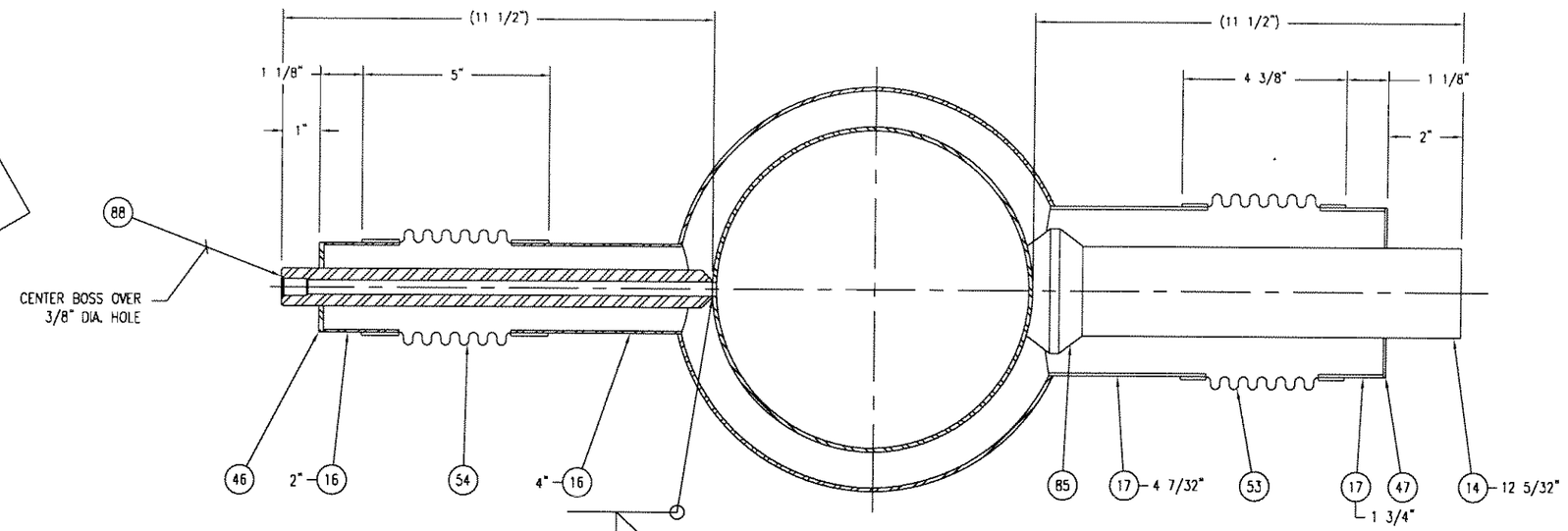

SECTION E-E

SCALE 4X

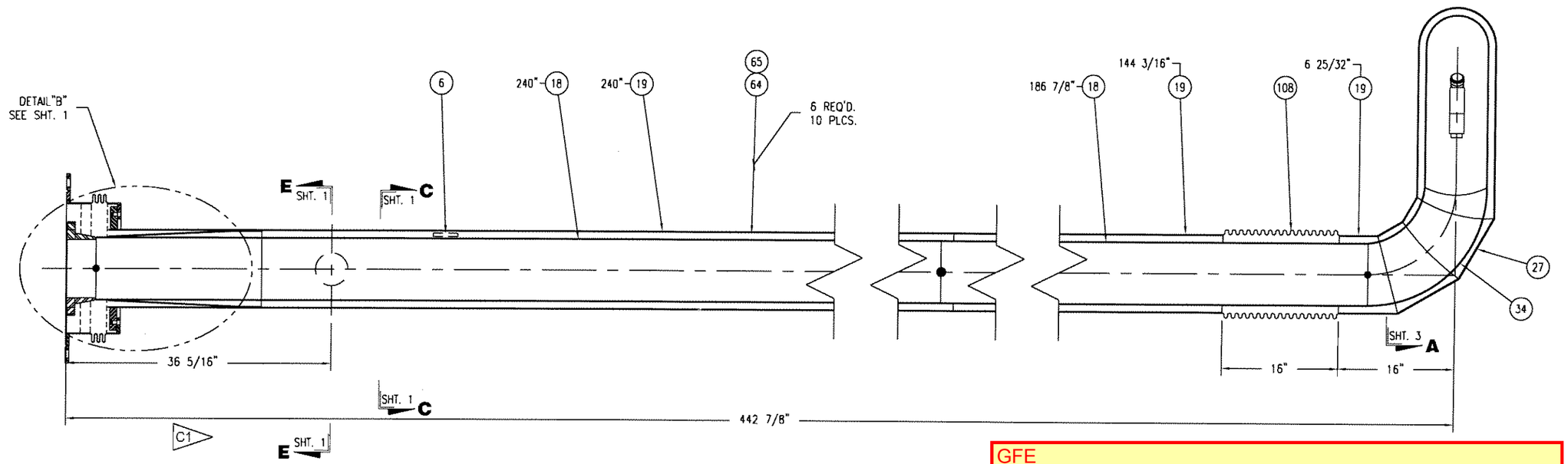

GFE
DRAWING NOT FOR CONSTRUCTION

TEST STAND

REVISIONS

REV	DATE	DWN	CHK'D	ENGR	RVW'D	EDR	DESCRIPTION
A	09/10/2009	KDH	RJM	RJM	TLW		1.) REMOVED DETAIL "F" & SECTION E-E, 2.) REVISED ENTIRE AREA
B	10/05/2009	KDH	RJM	RJM	TLW	4195	1) REMOVED INTERNAL BELLOWS, 2) ADDED SECTION E-E
C	10/26/2009	KDH	RJM	RJM	RSB	4233	1) REVISED DIMENSION

WHERE USED

DRAWN BY	BTH	TOLERANCES	
CHECKED	TLW	FRACTION	± 1/8
ENGINEER	RJM	2 PL .XX	± .01
		3 PL .XXX	± .005
REVIEWED		ANGULAR	± 1/2°
RELEASE DATE	06/22/2009	4055 EDR NO	

DIMENSIONS ARE IN INCHES AND PROVIDED PRIOR TO SURFACE TREATMENTS, UNLESS NOTED.

PHPK TECHNOLOGIES
2111 BUILDERS PLACE
COLUMBUS, OH 43204
614-486-4750 WWW.PHPK.COM

TITLE
STENNIS SPACE CENTER, A-2 TEST STAND
8" NPS X 10" NPS, V.J. LH2 TRANSFER PIPING

SIZE B | DRAWING NUMBER 09-2584-5001 | CHG C

EST WEIGHT 1800# | DWG | SHEET 2 OF 4

-- PHPK TECHNOLOGIES PROPRIETARY --
INFORMATION ON THIS DRAWING MAY NOT BE DISCLOSED TO ANY PARTY WITHOUT WRITTEN AUTHORIZATION FROM PHPK

-- PHPK TECHNOLOGIES PROPRIETARY --

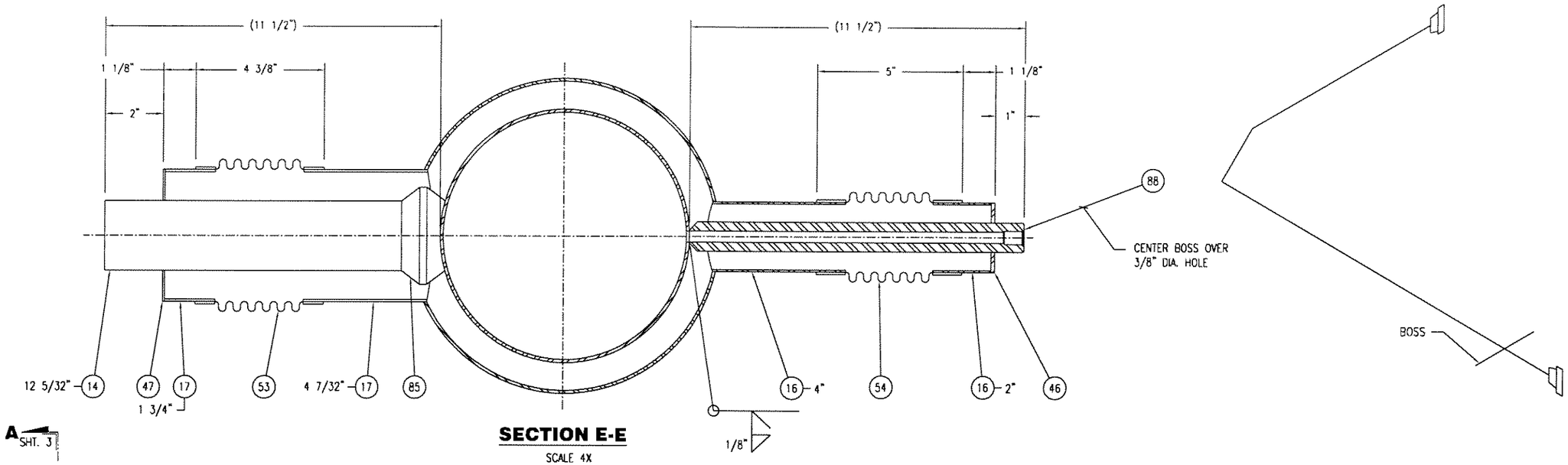

SECTION E-E

SCALE 4X

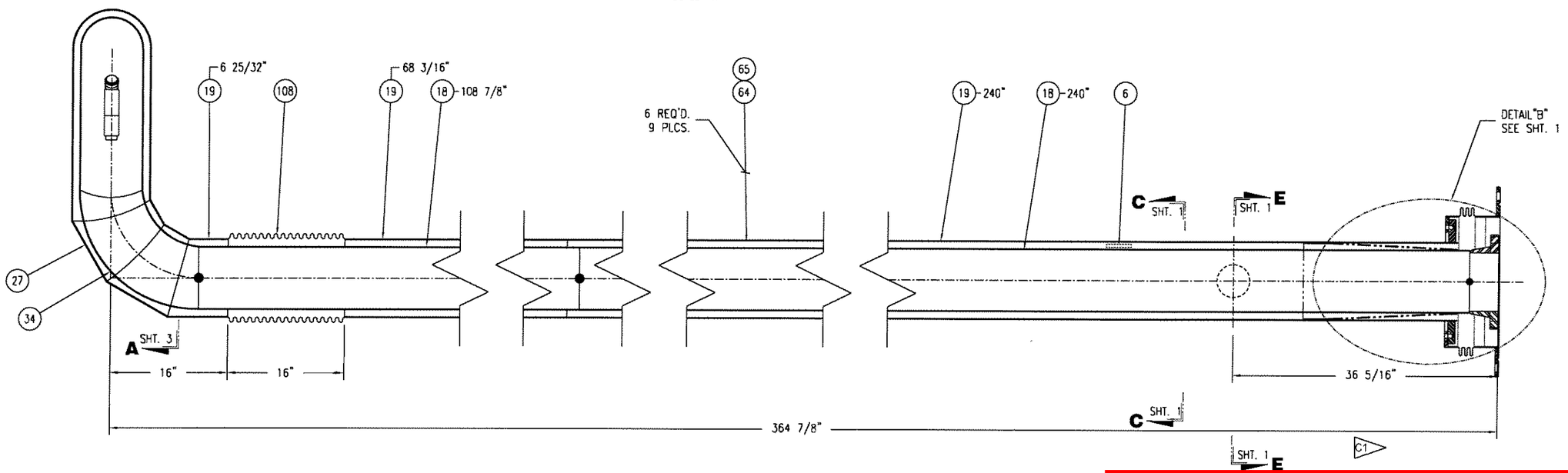

GFE
DRAWING NOT FOR CONSTRUCTION

TEST STAND

WHERE USED

DRAWN BY	BTH	TOLERANCES	
CHECKED	TLW	FRACTION	± 1/8
ENGINEER	RJM	2 PL .XX	± .01
		3 PL .XXX	± .005
REVIEWED	XXX	ANGULAR	± 1/2°
RELEASE DATE	06/22/2009	4055 EDR NO	

DIMENSIONS ARE IN INCHES AND PROVIDED PRIOR TO SURFACE TREATMENTS, UNLESS NOTED.

PHPK TECHNOLOGIES
2111 BUILDERS PLACE
COLUMBUS, OH 43204
614-486-4750 WWW.PHPK.COM

TITLE
STENNIS SPACE CENTER, A-2 TEST STAND
8" NPS X 10" NPS, V.J. LH2 TRANSFER PIPING

SIZE	DRAWING NUMBER	CHG
B	09-2584-5002	C

EST WEIGHT 1600# | DWG | SHEET 2 OF 4

-- PHPK TECHNOLOGIES PROPRIETARY --
INFORMATION ON THIS DRAWING MAY NOT BE DISCLOSED TO ANY PARTY WITHOUT WRITTEN AUTHORIZATION FROM PHPK

REVISIONS

REV	DATE	DWN	CHK'D	ENG'R	RVW'D	EDR	DESCRIPTION
A	09/10/2009	KDH	RJM	RJM	TLW		1.) REMOVED DETAIL "F" & SECTION E-E, 2.) REVISED ENTIRE AREA
B	10/05/2009	KDH	RJM	RJM	TLW	4195	1) REMOVED INTERNAL BELLOWS, 2) ADDED SECTION E-E
C	10/26/2009	KDH	RJM	RJM	RSB	4233	1.) REVISED DIMENSION

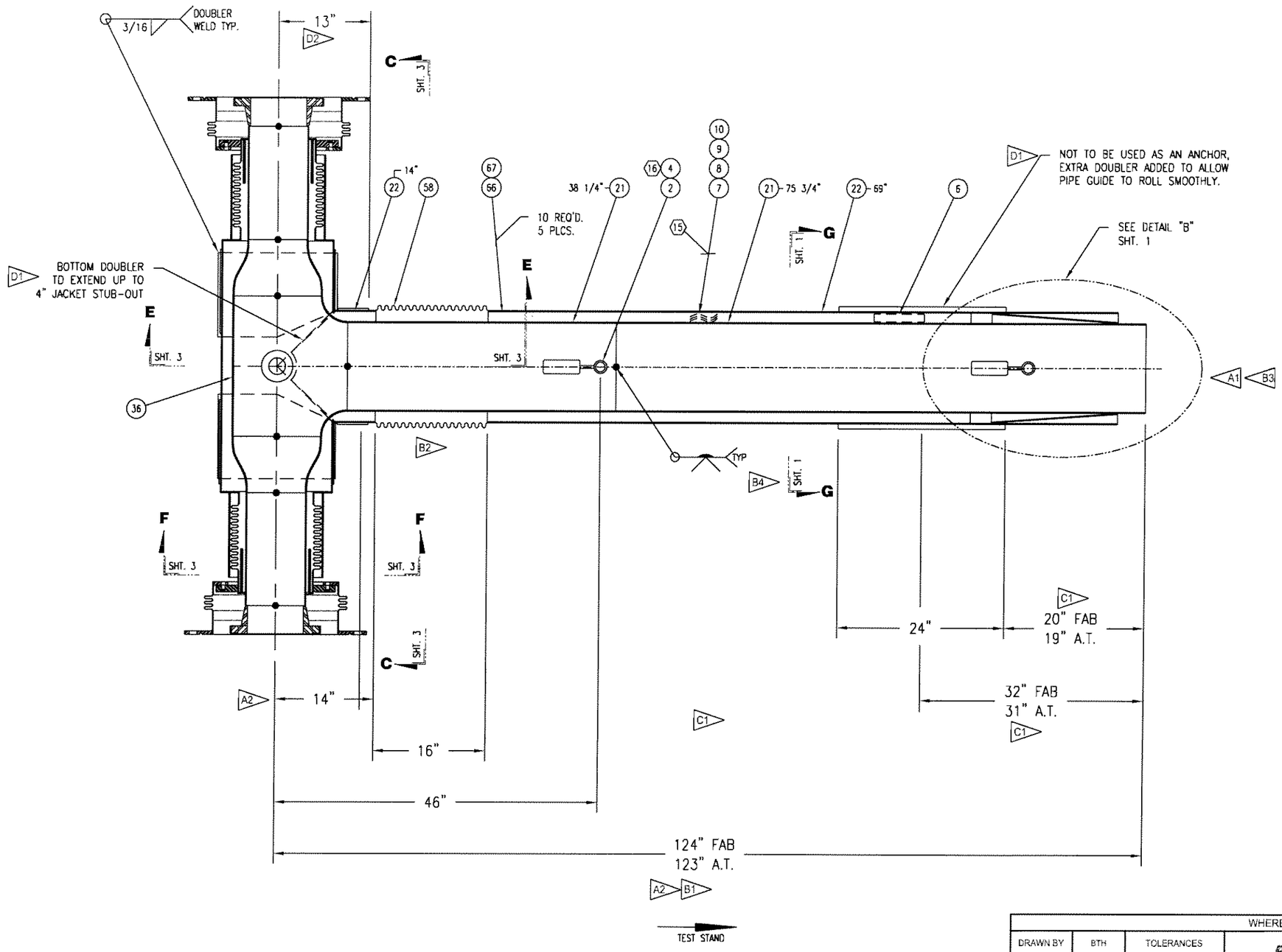

GFE
DRAWING NOT FOR CONSTRUCTION

REVISIONS

REV	DATE	DWN	CHK'D	ENG'R	RVW'D	EDR	DESCRIPTION
A	09/17/2009	KDH	RJM	RJM	TLW		1) REVISED THIS ENTIRE END, 2) REVISED DIM.
B	10/05/2009	KDH	RJM	RJM	TLW	4195	1) WAS 532 3/4", 2) MOVED BELLOWS, 3) REVISED THIS END, 4) ADDED SECTION G-G
C	10/19/2009	KDH	RJM	RJM	TLW	4217	1) REVISED DIMENSION
D	03/08/2010	KDH	RJM	RJM	TLW	4475	1) ADDED NOTE, 2) ADDED DIM

09-2584-5000

WHERE USED

DRAWN BY	BTH	TOLERANCES	
CHECKED	TLW	FRACTION	± 1/8
ENGINEER	RJM	2 PL .XX	± .01
		3 PL .XXX	± .005
REVIEWED		ANGULAR	± 1/2°
RELEASE DATE	06/22/2009	4055 EDR NO	

DIMENSIONS ARE IN INCHES AND PROVIDED PRIOR TO SURFACE TREATMENTS, UNLESS NOTED.

PHPK TECHNOLOGIES
2111 BUILDERS PLACE
COLUMBUS, OH 43204
614-486-4750 WWW.PHPK.COM

TITLE
STENNIS SPACE CENTER, A-2 TEST STAND
12" X 16" NPS, V.J. LH2 TRANSFER PIPING

SIZE B | DRAWING NUMBER 09-2584-5003 | CHG D

EST WEIGHT 2700# | DWG | SHEET 2 OF 5

-- PHPK TECHNOLOGIES PROPRIETARY --
INFORMATION ON THIS DRAWING MAY NOT BE DISCLOSED TO ANY PARTY WITHOUT WRITTEN AUTHORIZATION FROM PHPK

REVISIONS

REV	DATE	DWN	CHK'D	ENG'R	RVW'D	EDR	DESCRIPTION
A	06/04/2009	BTH	TLW	RJM		4021	1.) ADDED FLOW ARROW
B	06/11/2009	KDH	TLW	RJM		4038	1.) REMOVED FLOW ARROW, 2.) DELETED INNER LINE BELLOWS & ADDED JACKET BELLOWS, 3.) REVISED QTY.
C	06/17/2009	BTH	TLW	RJM		4049	1.) REMOVED SPACERS, 2.) REMOVED OUTER LINE BELLOWS, 3.) ADDED 2, 180° DOUBLERS, 4.) REVISED SPACER LOCATION
D	10/05/2009	KDH	RJM	RJM	TLW	4195	1.) REVISED ENTIRE SPOOL
E	03/08/2010	KDH	RJM	RJM	TLW	4475	1.) REVISED ENTIRE SPOOL

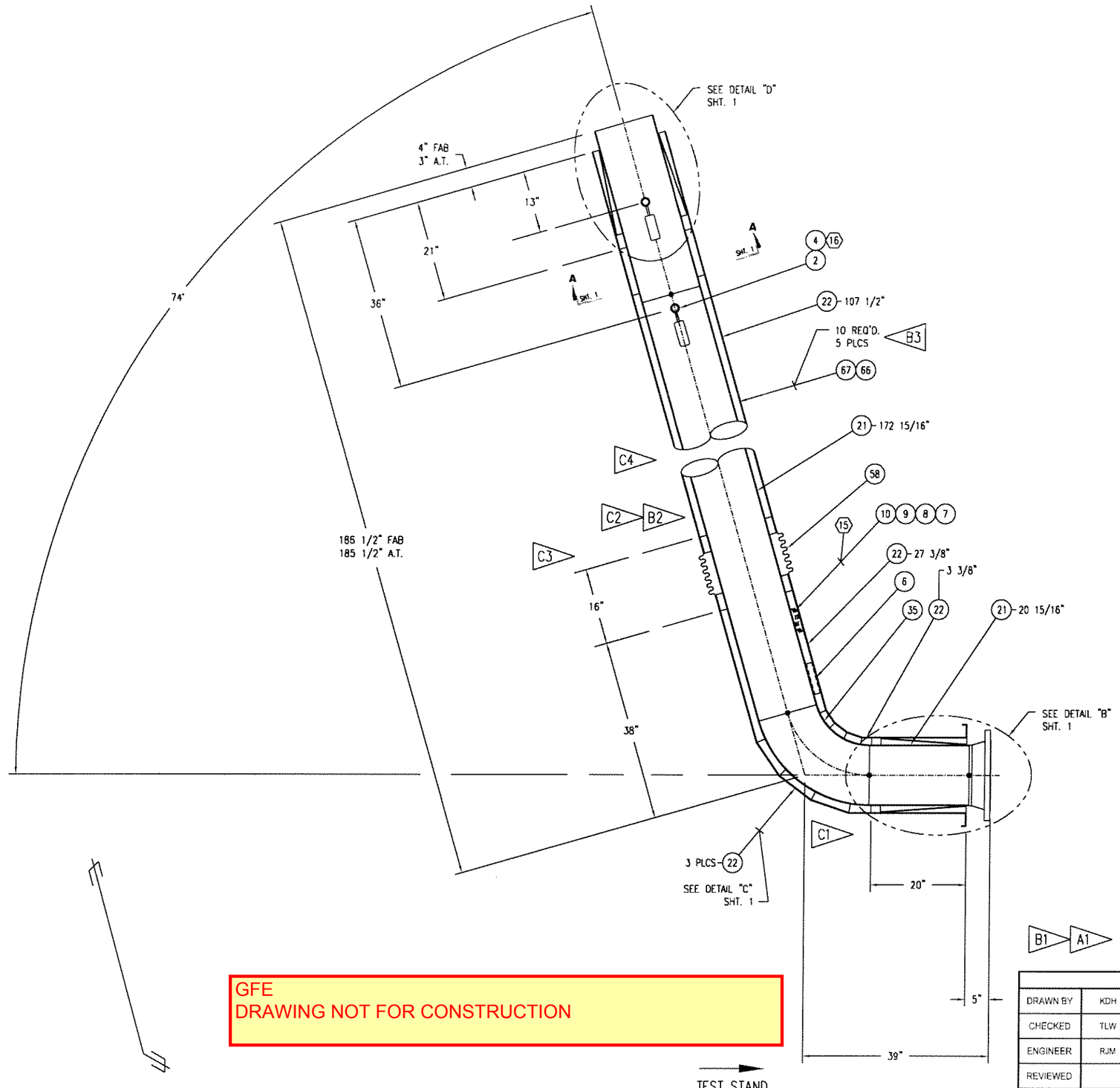

GFE
DRAWING NOT FOR CONSTRUCTION

-- PHPK TECHNOLOGIES PROPRIETARY --
INFORMATION ON THIS DRAWING MAY NOT BE DISCLOSED TO ANY PARTY WITHOUT WRITTEN AUTHORIZATION FROM PHPK

09-2584-5000

WHERE USED

DRAWN BY	KDH	TOLERANCES	
CHECKED	TLW	FRACTION	± 1/8
ENGINEER	RJM	2 PL .XX	± .01
		3 PL .XXX	± .005
REVIEWED		ANGULAR	± 1/2°
RELEASE DATE	06/02/2009	4020 EDR NO	

DIMENSIONS ARE IN INCHES AND PROVIDED PRIOR TO SURFACE TREATMENTS, UNLESS NOTED.

PHPK TECHNOLOGIES
2111 BUILDERS PLACE
COLUMBUS, OH 43204
614-486-4750 WWW.PHPK.COM

TITLE
STENNIS SPACE CENTER, A-2 TEST STAND
12" X 16" NPS, V.J. LH2 TRANSFER PIPING

SIZE B | DRAWING NUMBER 09-2584-5004 | CHG E

EST WEIGHT | DWG | SHEET 2 OF 3

REVISIONS

REV	DATE	DWN	CHK'D	ENG'R	RVW'D	EDR	DESCRIPTION
A	06/04/2009	BTH	TLW	RJM		4021	1.) ADDED FLOW ARROW, 2.) ADDED PUMPOUT
B	06/25/2009	BTH	TLW	RJM		4062	1.) REMOVED FLOW ARROW, 2.) ADDED ESTIMATED WEIGHT
C	10/07/2009	KDH	RJM	RJM	RSB	4199	1.) REVISED DIM., 2.) REVISED CUT-LENGTH, 3.) ADDED FLANGE AND RING, 4.) ADDED DIM.

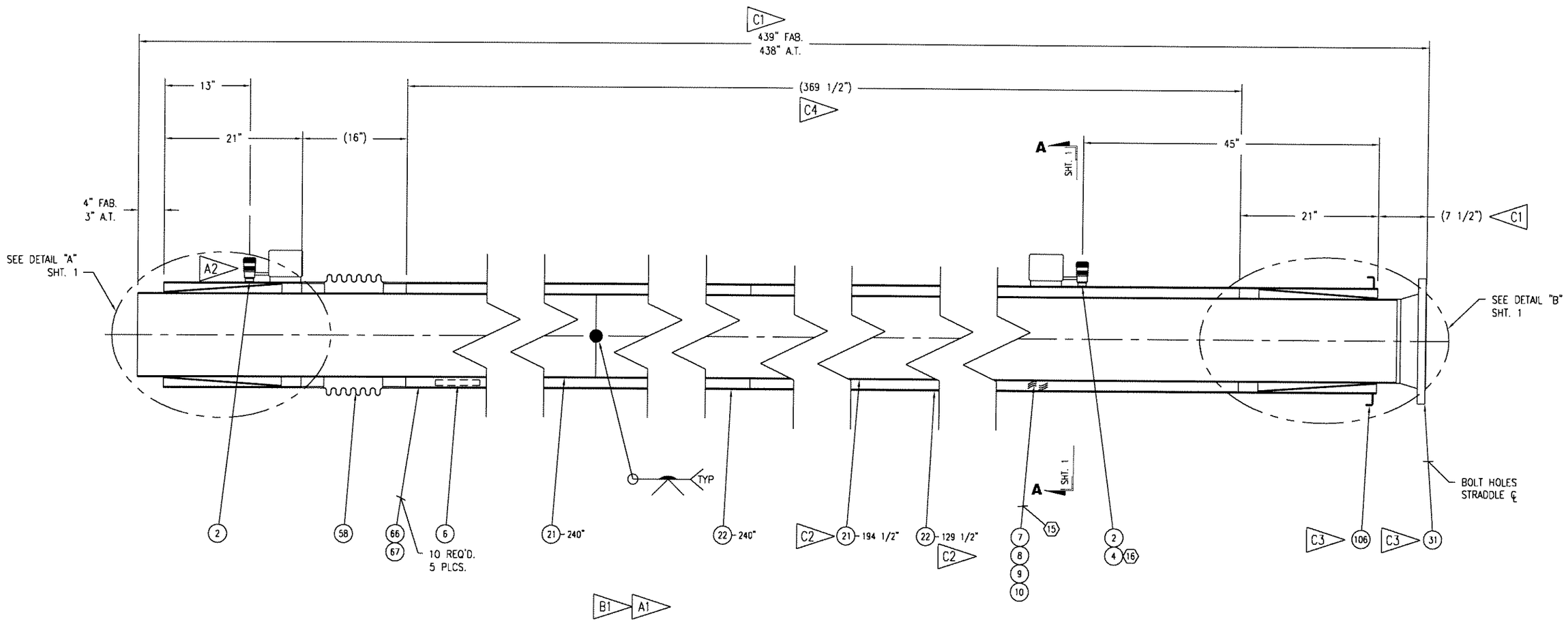

GFE
DRAWING NOT FOR CONSTRUCTION

TEST STAND

-- PHPK TECHNOLOGIES PROPRIETARY --
INFORMATION ON THIS DRAWING MAY NOT BE DISCLOSED TO ANY PARTY WITHOUT WRITTEN AUTHORIZATION FROM PHPK

09-2584-5000

WHERE USED

DRAWN BY	KDH	TOLERANCES	
CHECKED	TLW	FRACTION	± 1/8
ENGINEER	RJM	2 PL .XX	± .01
		3 PL .XXX	± .005
REVIEWED		ANGULAR	± 1/2°
RELEASE DATE	06/02/2009	4020	EDR NO

DIMENSIONS ARE IN INCHES AND PROVIDED PRIOR TO SURFACE TREATMENTS, UNLESS NOTED

PHPK TECHNOLOGIES
2111 BUILDERS PLACE
COLUMBUS, OH 43204
614-486-4750 WWW.PHPK.COM

TITLE
STENNIS SPACE CENTER, A-2 TEST STAND
12" X 16" NPS, V.J. LH2 TRANSFER PIPING

SIZE B | DRAWING NUMBER 09-2584-5005 | CHG C

EST WEIGHT | DWG | SHEET 2 OF 3

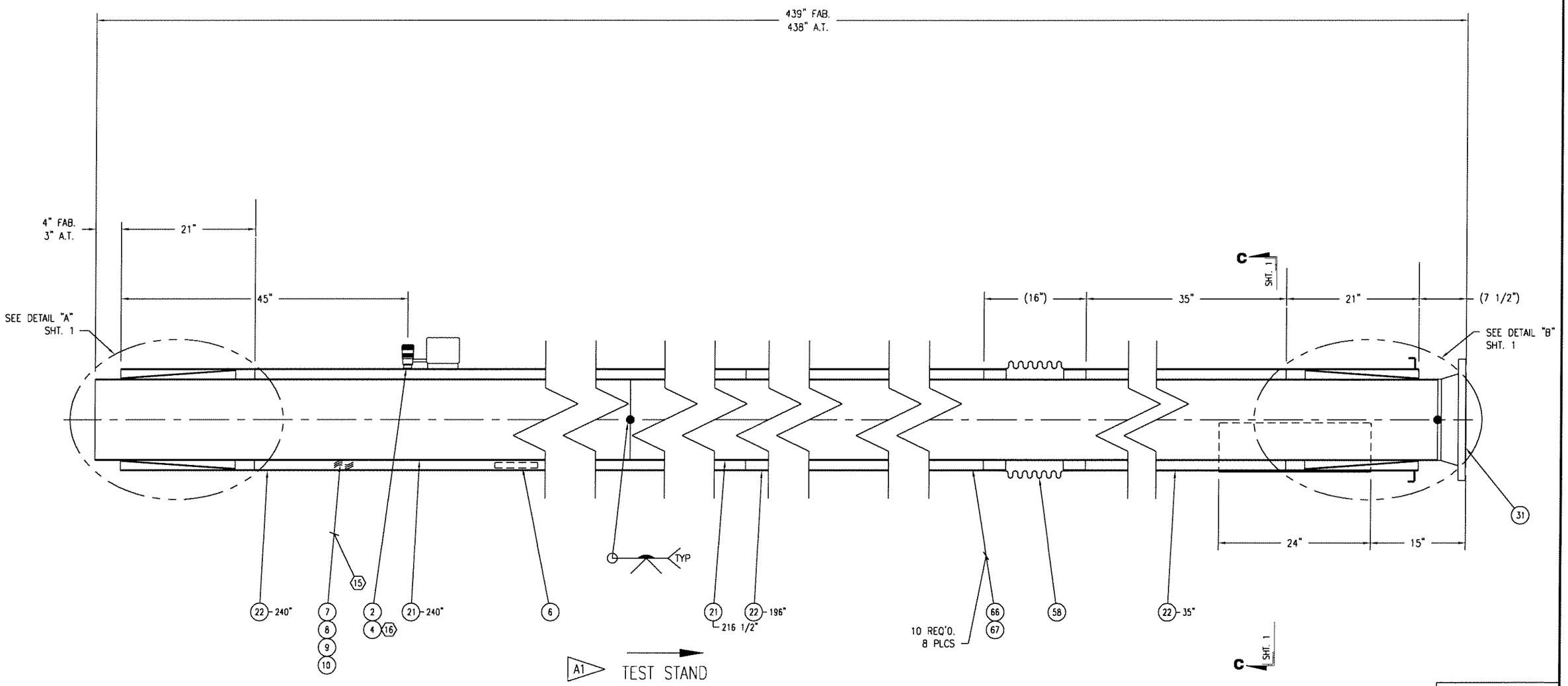

GFE
DRAWING NOT FOR CONSTRUCTION

REVISIONS

REV	DATE	DWN	CHK'D	ENG'R	RVW'D	EDR	DESCRIPTION
A	06/04/2009	BTH	TLW	RJM		4021	1.) ADDED FLOW ARROW, 2.) ADDED PUMPOUT
B	10/07/2009	KDH	RJM	RJM	RSB	4199	1.) REVISED ENTIRE SPOOL

09-2584-5000

WHERE USED

DRAWN BY	KDH	TOLERANCES	
CHECKED	TLW	FRACTION	± 1/8
ENGINEER	RJM	2 PL XX	± .01
		3 PL XXX	± .005
REVIEWED		ANGULAR	± 1/2°
RELEASE DATE	06/02/2009	4020	EDR NO

DIMENSIONS ARE IN INCHES AND PROVIDED PRIOR TO SURFACE TREATMENTS, UNLESS NOTED.

PHPK TECHNOLOGIES
2111 BUILDERS PLACE
COLUMBUS, OH 43204
614-486-4750 WWW.PHPK.COM

TITLE
STENNIS SPACE CENTER, A-2 TEST STAND
12" X 16" NPS, V.J. LH2 TRANSFER PIPING

SIZE B | DRAWING NUMBER 09-2584-5006 | CHG B

EST WEIGHT | DWG | SHEET 2 OF 3

-- PHPK TECHNOLOGIES PROPRIETARY --
INFORMATION ON THIS DRAWING MAY NOT BE DISCLOSED TO ANY PARTY WITHOUT WRITTEN AUTHORIZATION FROM PHPK

REVISIONS

REV	DATE	DWN	CHK'D	ENG'R	RV'W'D	EDR	DESCRIPTION
A	06/04/2009	BTH	TLW	RJM		4021	1.) ADDED FLOW ARROW, 2.) ADDED PUMPOUT
B	06/25/2009	BTH	TLW	RJM		4062	1.) REMOVED FLOW ARROW, 2.) ADDED ESTIMATED WEIGHT
C	10/07/2009	KDH	RJM	RJM	RSB	4199	1.) REMOVED POV, 2.) REVISED DIM., 3.) REVISED THIS END, 4.) MADE SECTION A-A, C-C

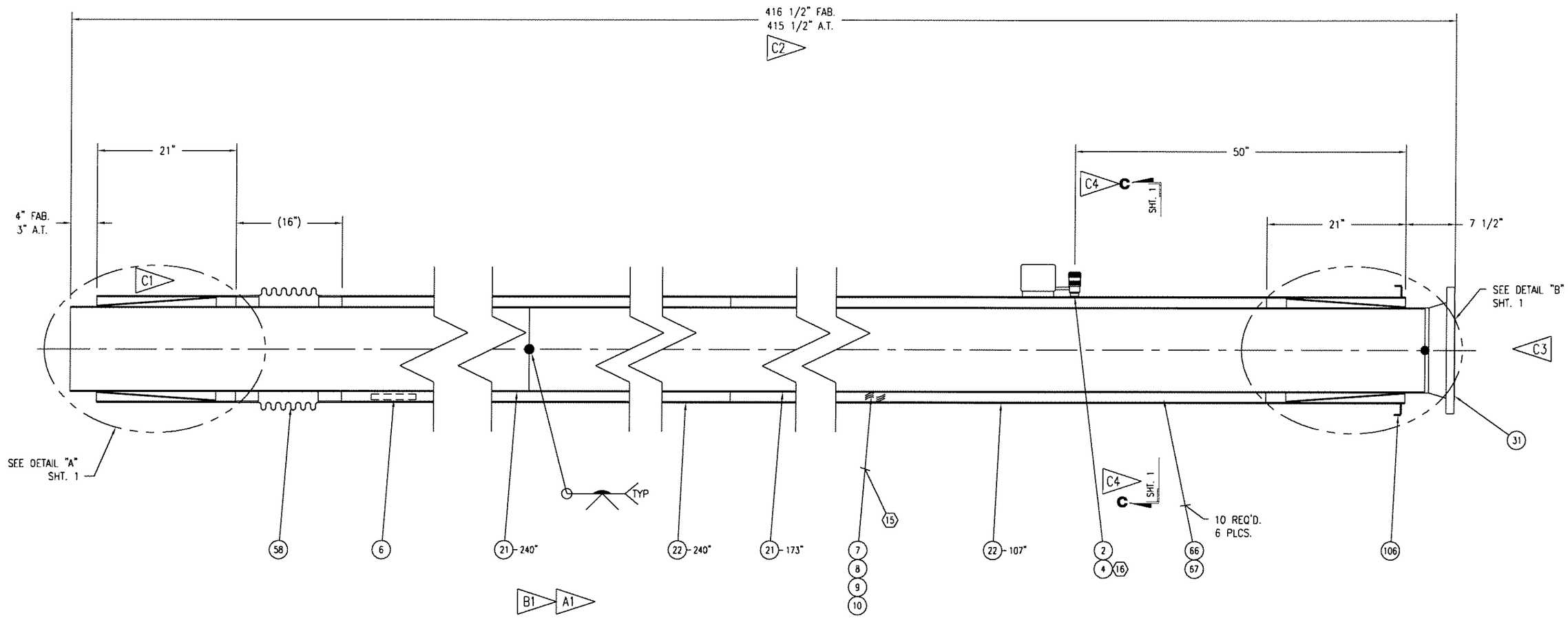

TEST STAND

GFE
DRAWING NOT FOR CONSTRUCTION

09-2584-5000

WHERE USED

DRAWN BY	KDH	TOLERANCES	
CHECKED	TLW	FRACTION	± 1/8
ENGINEER	RJM	2 PL .XX	± .01
		3 PL .XXX	± .005
REVIEWED		ANGULAR	± 1/2°
RELEASE DATE	06/02/2009	4020	EDR NO

DIMENSIONS ARE IN INCHES AND PROVIDED PRIOR TO SURFACE TREATMENTS, UNLESS NOTED

PHPK TECHNOLOGIES
2111 BUILDERS PLACE
COLUMBUS, OH 43204
614-486-4750 WWW.PHPK.COM

TITLE
STENNIS SPACE CENTER, A-2 TEST STAND
12" X 16" NPS, V.J. LH2 TRANSFER PIPING

SIZE	DRAWING NUMBER	CHG
B	09-2584-5007	C

EST WEIGHT | DWG | SHEET 2 OF 3

-- PHPK TECHNOLOGIES PROPRIETARY --
INFORMATION ON THIS DRAWING MAY NOT BE DISCLOSED TO ANY PARTY WITHOUT WRITTEN AUTHORIZATION FROM PHPK

REVISIONS

REV	DATE	DWN	CHK'D	ENG'R	RVW'D	EDR	DESCRIPTION
A	06/04/2009	BTH	TLW	RJM		4021	1.) ADDED FLOW ARROW, 2.) ADDED PUMPOUT
B	06/25/2009	BTH	TLW	RJM		4062	1.) REMOVED FLOW ARROW, 2.) ADDED ESTIMATED WEIGHT
C	10/07/2009	KDH	RJM	RJM	RSB	4199	1.) REVISED THIS END, 2.) REVISED DIM., 3.) MADE DETAIL "C", 4.) ADDED DIM.

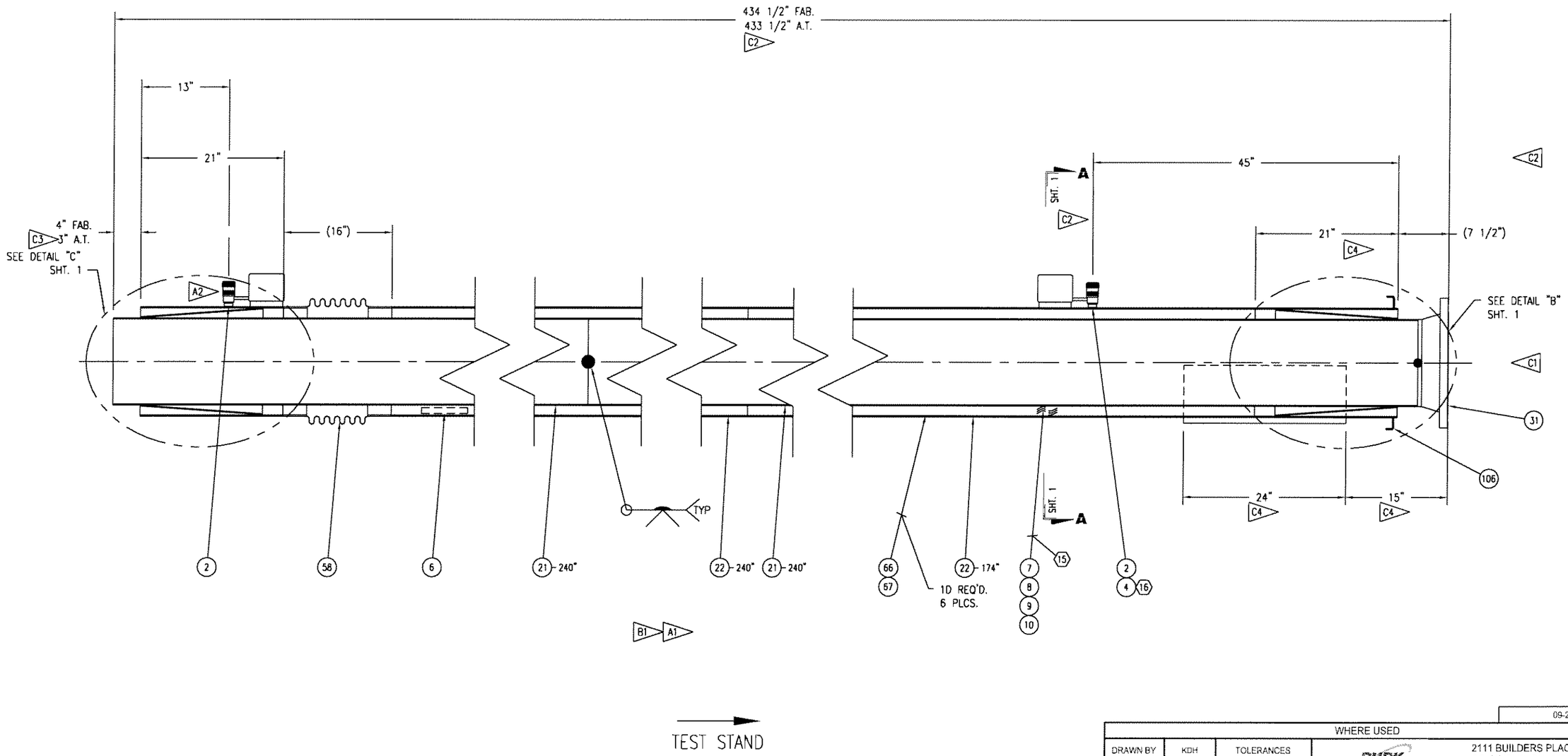

GFE
DRAWING NOT FOR CONSTRUCTION

-- PHPK TECHNOLOGIES PROPRIETARY --
INFORMATION ON THIS DRAWING MAY NOT BE DISCLOSED TO ANY PARTY WITHOUT WRITTEN AUTHORIZATION FROM PHPK

09-2584-5000

WHERE USED

DRAWN BY	KDH	TOLERANCES	
CHECKED	TLW	FRACTION	± 1/8
ENGINEER	RJM	2 PL .XX	± .01
		3 PL .XXX	± .005
REVIEWED		ANGULAR	± 1/2°
RELEASE DATE	06/02/2009	4020	EDR NO

DIMENSIONS ARE IN INCHES AND PROVIDED PRIOR TO SURFACE TREATMENTS, UNLESS NOTED.

PHPK TECHNOLOGIES
2111 BUILDERS PLACE
COLUMBUS, OH 43204
614-486-4750 WWW.PHPK.COM

TITLE
STENNIS SPACE CENTER, A-2 TEST STAND
12" X 16" NPS, V.J. LH2 TRANSFER PIPING

SIZE	DRAWING NUMBER	CHG
B	09-2584-5008	C

EST WEIGHT | DWG | SHEET 2 OF 3

REVISIONS

REV	DATE	DWN	CHK'D	ENG'R	RVW'D	EDR	DESCRIPTION
A	06/04/2009	BTH	TLW	RJM		4021	1.) ADDED FLOW ARROW, 2.) ADDED PUMP-OUT
B	06/23/2009	BTH	TLW	RJM			1.) REMOVED FLOW ARROW, 2.) ADDED PIPE SUPPORT, 3.) ADDED ESTIMATED WEIGHT
C	10/07/2009	KDH	RJM	RJM	RSB	4199	1.) REVISED ENTIRE SPOOL

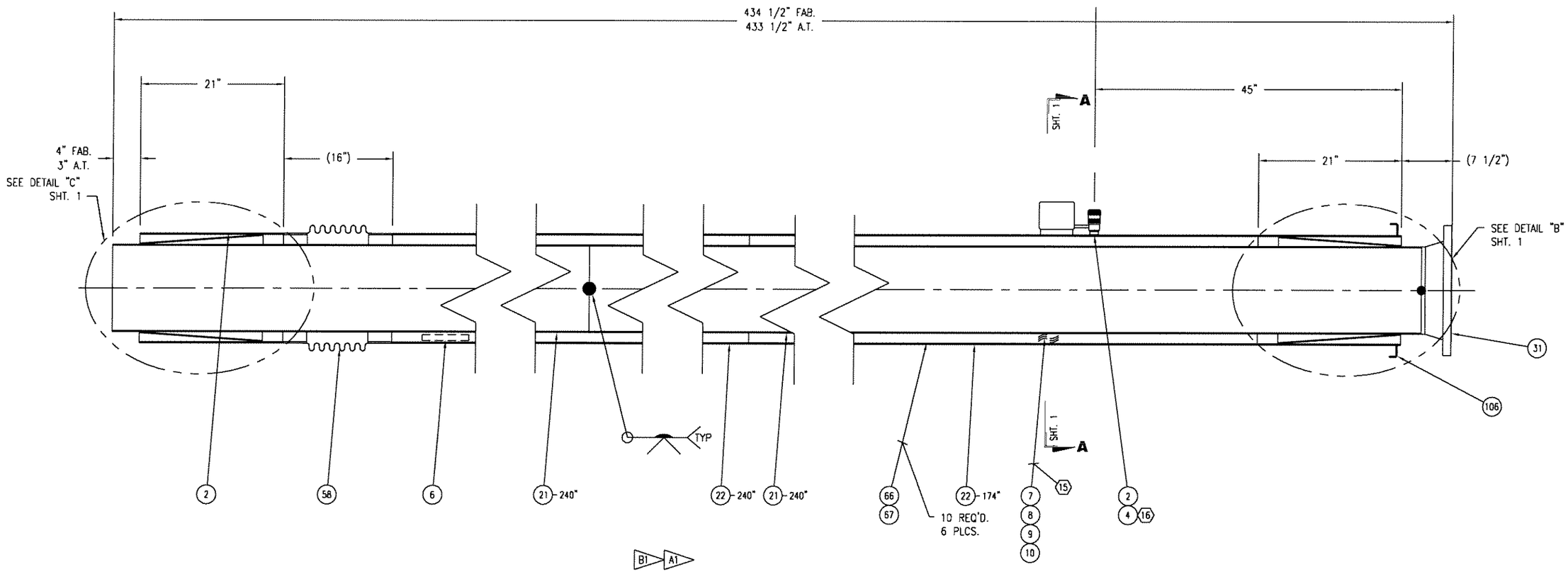

TEST STAND

GFE
DRAWING NOT FOR CONSTRUCTION

-- PHPK TECHNOLOGIES PROPRIETARY --
INFORMATION ON THIS DRAWING MAY NOT BE DISCLOSED TO ANY PARTY WITHOUT WRITTEN AUTHORIZATION FROM PHPK

09-2584-5000

WHERE USED

DRAWN BY	KDH	TOLERANCES	
CHECKED	TLW	FRACTION	± 1/8
ENGINEER	RJM	2 PL .XX	± .01
REVIEWED		3 PL .XXX	± .005
		ANGULAR	± 1/2°
RELEASE DATE	06/02/2009	4020	EDR NO

DIMENSIONS ARE IN INCHES AND PROVIDED PRIOR TO SURFACE TREATMENTS, UNLESS NOTED.

PHPK TECHNOLOGIES
2111 BUILDERS PLACE
COLUMBUS, OH 43204
614-486-4750 WWW.PHPK.COM

TITLE
STENNIS SPACE CENTER, A-2 TEST STAND
12" X 16" NPS, V.J. LH2 TRANSFER PIPING

SIZE	DRAWING NUMBER	CHG
B	09-2584-5009	C

EST WEIGHT | DWG | SHEET 2 OF 3

REVISIONS

REV	DATE	DWN	CHK'D	ENG'R	RVW'D	EDR	DESCRIPTION
A	06/04/2009	BTH	TLW	RJM		4021	1.) ADDED FLOW ARROW, 2.) ADDED PUMPOUT
B	06/23/2009	BTH	TLW	RJM		4062	1.) REMOVED FLOW ARROW, 2.) ADDED ESTIMATED WEIGHT
C	10/07/2009	KDH	RJM	RJM	RSB	4199	1.) REVISED DIM., 2.) ADDED DIM., 3.) REVISED THIS END., 4.) MADE DETAIL "B", DETAIL "C"

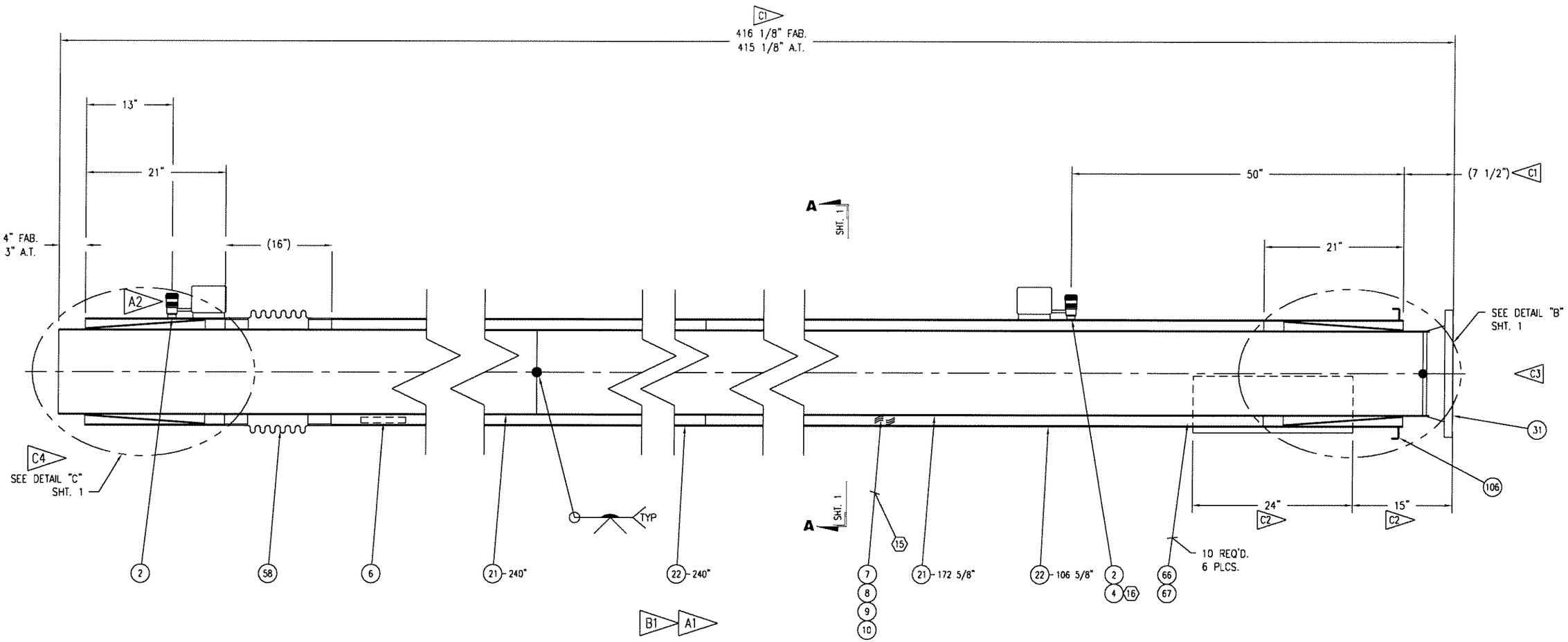

TEST STAND

GFE
DRAWING NOT FOR CONSTRUCTION

-- PHPK TECHNOLOGIES PROPRIETARY --
INFORMATION ON THIS DRAWING MAY NOT BE DISCLOSED TO ANY PARTY WITHOUT WRITTEN AUTHORIZATION FROM PHPK

09-2584-5000

WHERE USED

DRAWN BY	KDH	TOLERANCES	
CHECKED	TLW	FRACTION	± 1/8
ENGINEER	RJM	2 PL .XX	± .01
		3 PL .XXX	± .005
REVIEWED		ANGULAR	± 1/2°
RELEASE DATE	06/02/2009	4020	EDR NO

DIMENSIONS ARE IN INCHES AND PROVIDED PRIOR TO SURFACE TREATMENTS, UNLESS NOTED.

PHPK TECHNOLOGIES
2111 BUILDERS PLACE
COLUMBUS, OH 43204
614-486-4750 WWW.PHPK.COM

TITLE
STENNIS SPACE CENTER, A-2 TEST STAND
12" X 16" NPS, V.J. LH2 TRANSFER PIPING

SIZE	DRAWING NUMBER	CHG
B	09-2584-5010	B

EST WEIGHT | DWG | SHEET 2 OF 3

REVISIONS

REV	DATE	DWN	CHK'D	ENG'R	RV'W'D	EDR	DESCRIPTION
A	06/04/2009	BTH	TLW	RJM		4021	1.) ADDED FLOW ARROW, 2.) ADDED PUMPOUT
B	06/23/2009	BTH	TLW	RJM			1.) REMOVED FLOW ARROW, 2.) ADDED ESTIMATED WEIGHT
C	10/07/2009	KDH	RJM	RJM	RSB	4199	1.) REVISED DIM., 2.) ADDED DIM., 3.) REVISED THIS END, 4.) MADE DETAIL "B", DETAIL "C"

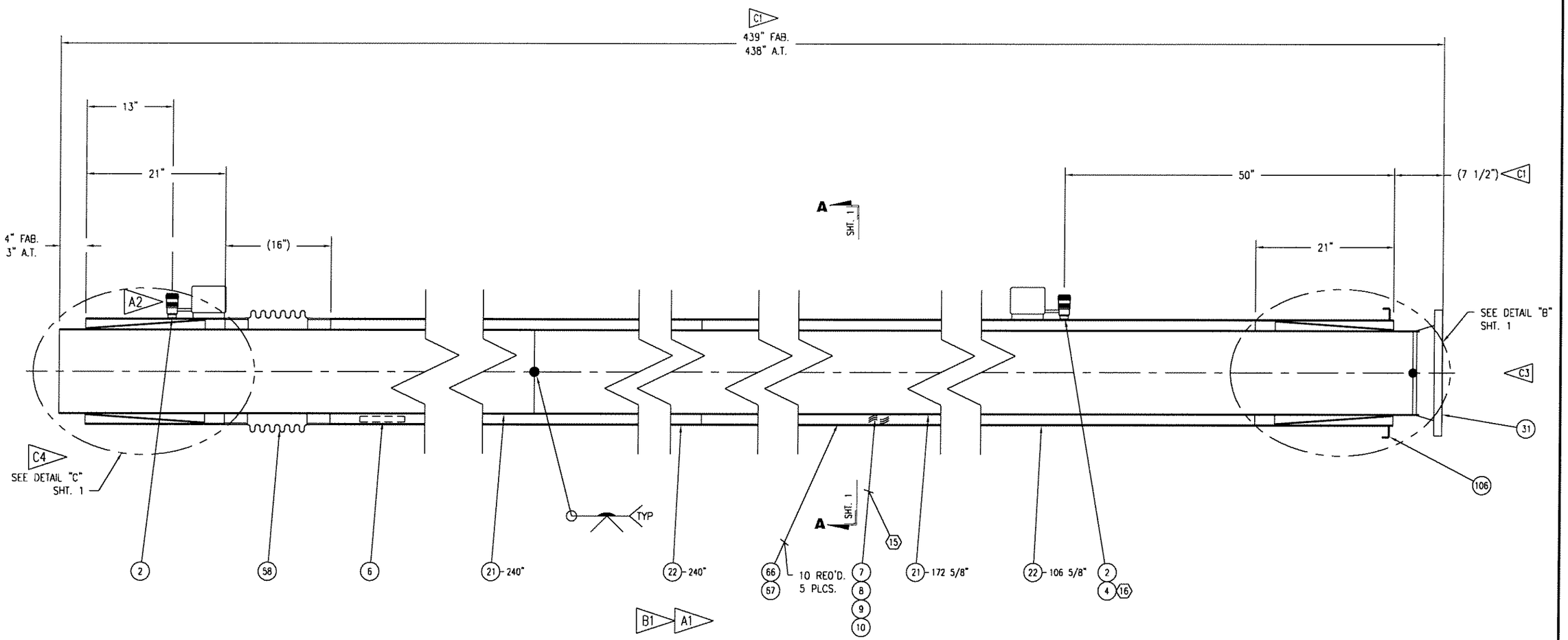

TEST STAND

GFE
DRAWING NOT FOR CONSTRUCTION

-- PHPK TECHNOLOGIES PROPRIETARY --
INFORMATION ON THIS DRAWING MAY NOT BE DISCLOSED TO ANY PARTY WITHOUT WRITTEN AUTHORIZATION FROM PHPK

09-2584-5000

WHERE USED

DRAWN BY	KDH	TOLERANCES	
CHECKED	TLW	FRACTION	± 1/8
ENGINEER	RJM	2 PL .XX	± .01
		3 PL .XXX	± .005
REVIEWED		ANGULAR	± 1/2°
RELEASE DATE	06/02/2009	4020	
		EDR NO	

DIMENSIONS ARE IN INCHES AND PROVIDED PRIOR TO SURFACE TREATMENTS, UNLESS NOTED.

PHPK TECHNOLOGIES
2111 BUILDERS PLACE
COLUMBUS, OH 43204
614-486-4750 WWW.PHPK.COM

TITLE
STENNIS SPACE CENTER, A-2 TEST STAND
12" X 16" NPS, V.J. LH2 TRANSFER PIPING

SIZE	DRAWING NUMBER	CHG
B	09-2584-5011	C

EST WEIGHT | DWG | SHEET 2 OF 3

REVISIONS

REV	DATE	DWN	CHK'D	ENG'R	RVW'D	EDR	DESCRIPTION
A	06/04/2009	BTH	TLW	RJM		4021	1.) ADDED FLOW ARROW, 2.) ADDED PUMPOUT
B	10/07/2009	KDH	RJM	RJM	RSB	4199	1.) REVISED THIS END, 2.) REVISED DIM., 3.) MADE DETAIL "C", 4.) ADDED DIM. 5.) DELETED ITEMS 2, 25, 42 (2X), 59, 60, 66 & 69, 6.) REVISED LENGTH, 7.) ADDED ITEM 58

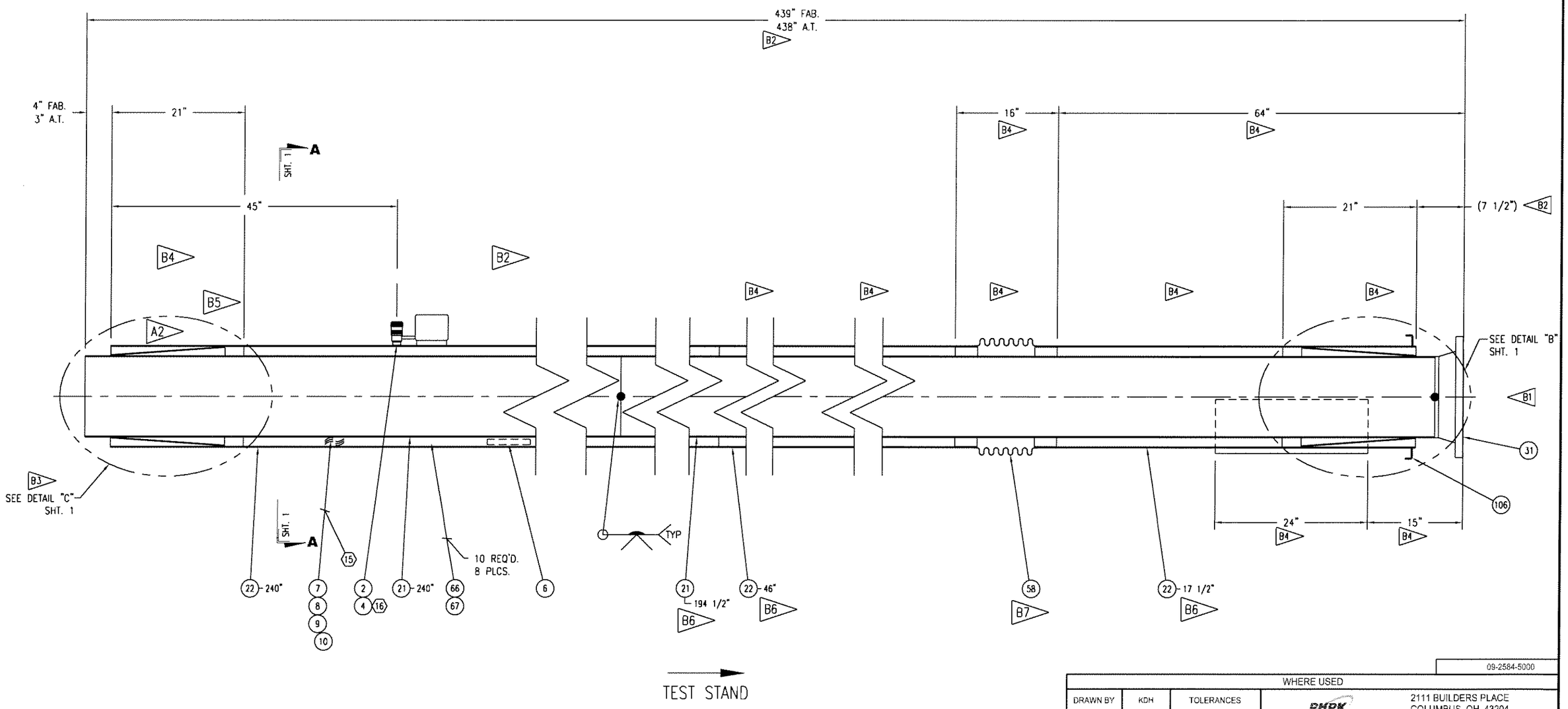

GFE
DRAWING NOT FOR CONSTRUCTION

09-2584-5000

WHERE USED

DRAWN BY	KDH	TOLERANCES	
CHECKED	TLW	FRACTION	± 1/8
ENGINEER	RJM	2 PL .XX	± .01
		3 PL .XXX	± .005
REVIEWED		ANGULAR	± 1/2°
RELEASE DATE	06/02/2009	4020 EDR NO	

DIMENSIONS ARE IN INCHES AND PROVIDED PRIOR TO SURFACE TREATMENTS, UNLESS NOTED.

PHPK TECHNOLOGIES
2111 BUILDERS PLACE
COLUMBUS, OH 43204
614-486-4750 WWW.PHPK.COM

TITLE
STENNIS SPACE CENTER, A-2 TEST STAND
12" X 16" NPS, V.J. LH2 TRANSFER PIPING

SIZE B | DRAWING NUMBER 09-2584-5012 | CHG B

EST WEIGHT 2230# | DWG | SHEET 2 OF 3

-- PHPK TECHNOLOGIES PROPRIETARY --
INFORMATION ON THIS DRAWING MAY NOT BE DISCLOSED TO ANY PARTY WITHOUT WRITTEN AUTHORIZATION FROM PHPK

REVISIONS

REV	DATE	DWN	CHK'D	ENG'R	RVW'D	EDR	DESCRIPTION
A	06/04/2009	BTH	TLW	RJM		4021	1.) ADDED FLOW ARROW, 2.) ADDED PUMPOUT
B	06/25/2009	BTH	TLW	RJM		4062	1.) REMOVED FLOW ARROW, 2.) ADDED ESTIMATED WEIGHT
C	10/07/2009	KDH	RJM	RJM	RSB	4199	1.) REVISED THIS END, 2.) REVISED DIM., 3.) MADE DETAIL "C", 4.) ADDED DIM.
D	10/26/2009	KDH	RJM	RJM	RSB	4233	1.) REMOVED DOUBLER AND DIMENSIONS

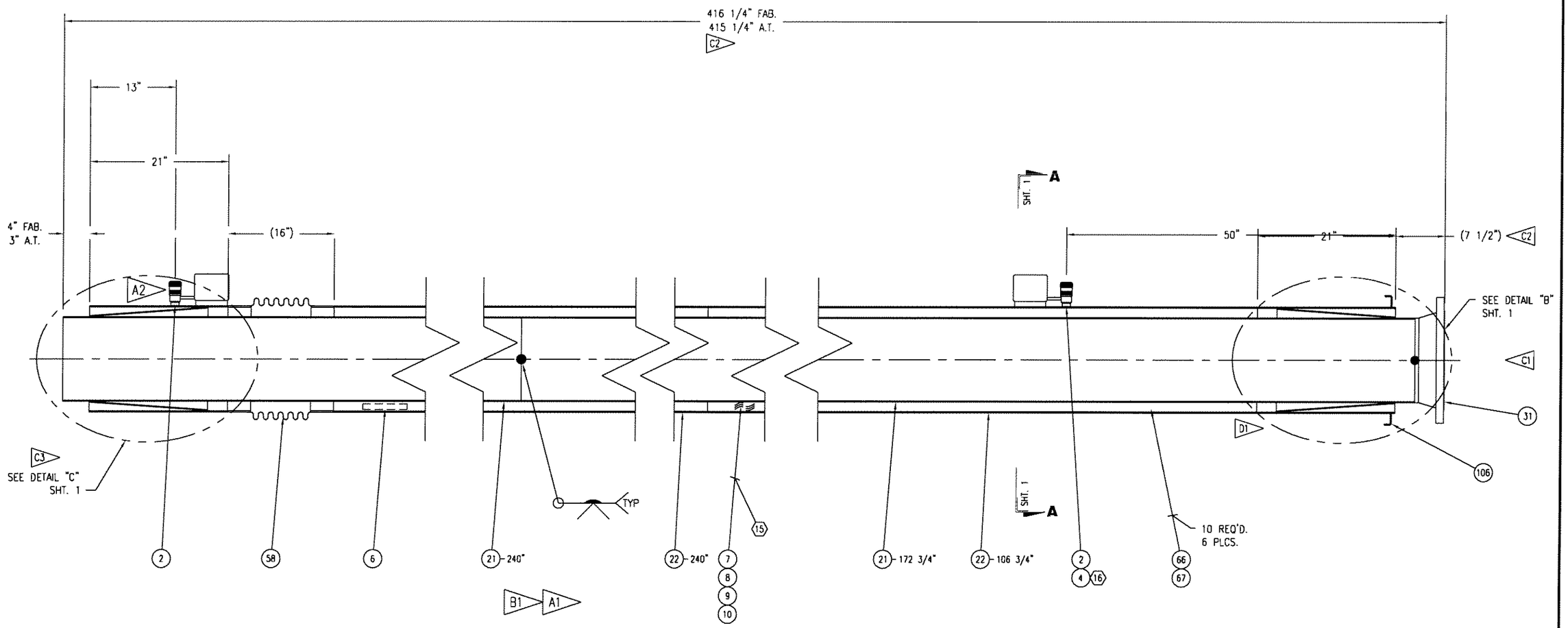

TEST STAND

GFE
DRAWING NOT FOR CONSTRUCTION

09-2584-5000

WHERE USED

DRAWN BY	KDH	TOLERANCES	
CHECKED	TLW	FRACTION	± 1/8
ENGINEER	RJM	2 PL .XX	± .01
		3 PL .XXX	± .005
REVIEWED		ANGULAR	± 1/2°
RELEASE DATE	06/02/2009	4020	EDR NO

DIMENSIONS ARE IN INCHES AND PROVIDED PRIOR TO SURFACE TREATMENTS, UNLESS NOTED.

PHPK TECHNOLOGIES
2111 BUILDERS PLACE
COLUMBUS, OH 43204
614-486-4750 WWW.PHPK.COM

TITLE
STENNIS SPACE CENTER, A-2 TEST STAND
12" X 16" NPS, V.J. LH2 TRANSFER PIPING

SIZE B | DRAWING NUMBER 09-2584-5013 | CHG D

EST WEIGHT 2113# | DWG | SHEET 2 OF 3

-- PHPK TECHNOLOGIES PROPRIETARY --
INFORMATION ON THIS DRAWING MAY NOT BE DISCLOSED TO ANY PARTY WITHOUT WRITTEN AUTHORIZATION FROM PHPK

REVISIONS

REV	DATE	DWN	CHK'D	ENG'R	RVW'D	EDR	DESCRIPTION
A	06/04/2009	BTH	TLW	RJM		4021	1.) ADDED FLOW ARROW, 2.) ADDED PUMPOUT
B	06/25/2009	BTH	TLW	RJM		4062	1.) REMOVED FLOW ARROW, 2.) ADDED ESTIMATED WEIGHT
C	10/07/2009	KDH	RJM	RJM	RSB	4199	1.) REVISED THIS END, 2.) REVISED DIM., 3.) MADE DETAIL "C", 4.) ADDED DIM. 5.) DELETED ITEM 2. 6.) REVISED LENGTH
D	10/26/2009	KDH	RJM	RJM	RSB	4233	1.) ATTACHED DIM. LINE TO SPACER

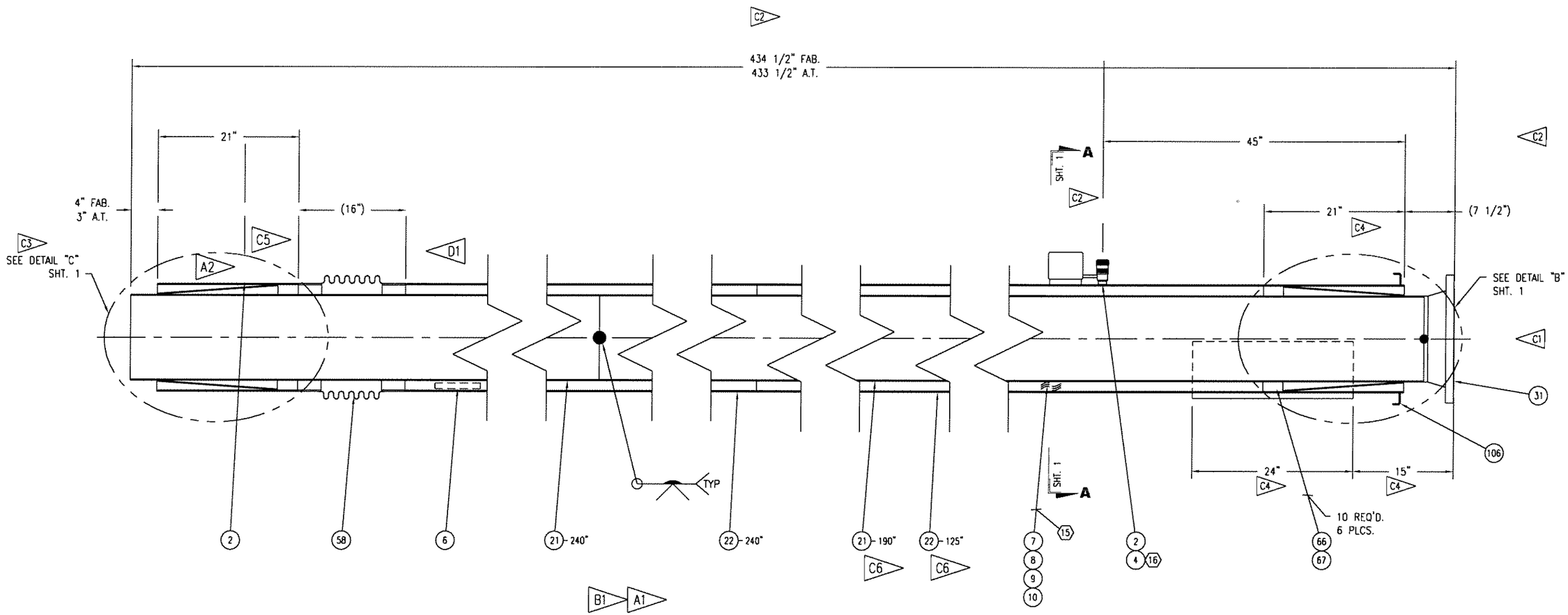

TEST STAND

GFE
DRAWING NOT FOR CONSTRUCTION

-- PHPK TECHNOLOGIES PROPRIETARY --
INFORMATION ON THIS DRAWING MAY NOT BE DISCLOSED TO ANY PARTY WITHOUT WRITTEN AUTHORIZATION FROM PHPK

09-2584-5000

WHERE USED

DRAWN BY	KDH	TOLERANCES	
CHECKED	TLW	FRACTION	± 1/8
ENGINEER	RJM	2 PL .XX	± .01
		3 PL .XXX	± .005
REVIEWED		ANGULAR	± 1/2°
RELEASE DATE	06/02/2009	4020	EDR NO

DIMENSIONS ARE IN INCHES AND PROVIDED PRIOR TO SURFACE TREATMENTS, UNLESS NOTED.

PHPK TECHNOLOGIES
2111 BUILDERS PLACE
COLUMBUS, OH 43204
614-486-4750 WWW.PHPK.COM

TITLE
STENNIS SPACE CENTER, A-2 TEST STAND
12" X 16" NPS, V.J. LH2 TRANSFER PIPING

SIZE B | DRAWING NUMBER 09-2584-5014 | CHG D

EST WEIGHT 2230# | DWG | SHEET 2 OF 3

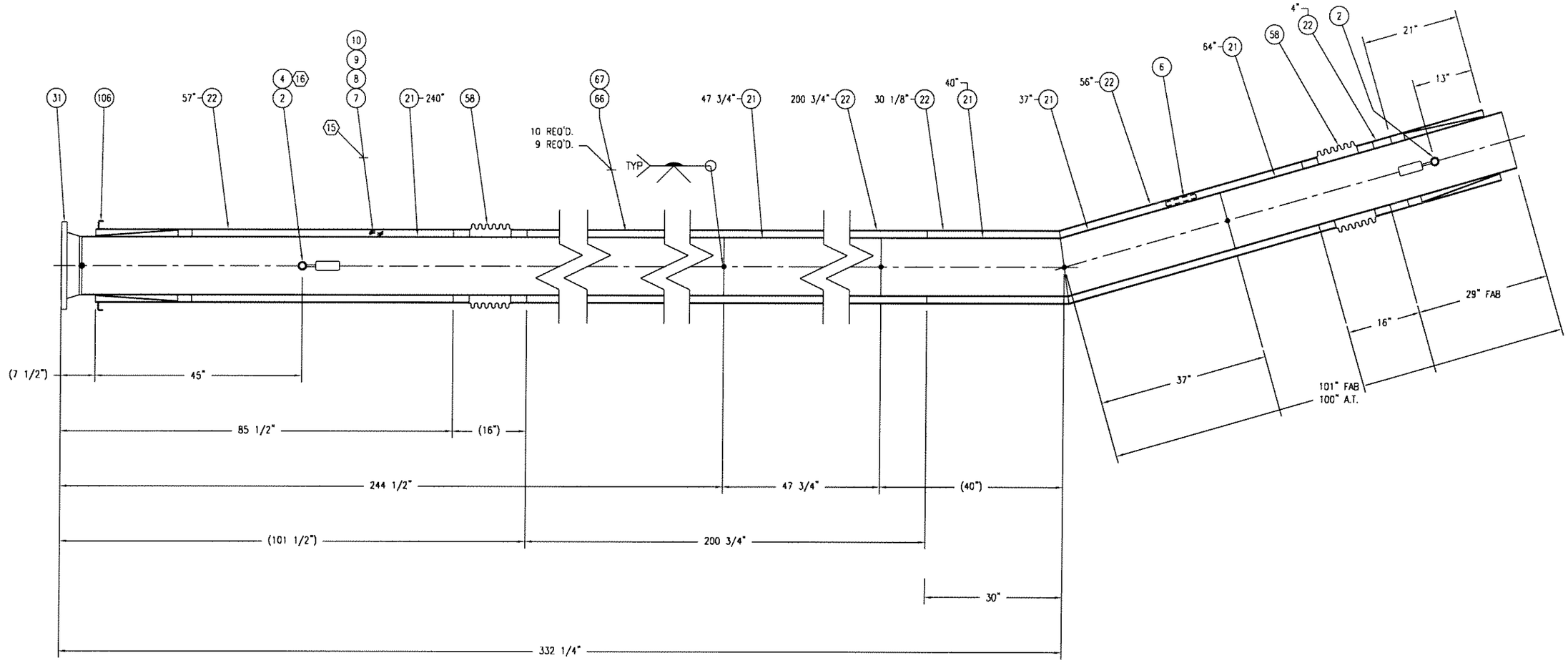

TEST STAND

GFE
DRAWING NOT FOR CONSTRUCTION

REVISIONS

REV	DATE	DWN	CHK'D	ENG'R	RVW'D	EDR	DESCRIPTION
A	06/04/2009	BTH	TLW	RJM		4021	1.) ADDED FLOW ARROW, 2.) ADDED PUMPOUT
B	10/08/2009	KDH	RJM	RJM	RSB	4202	1.) REVISED ENTIRE SPOOL

09-2584-5000

WHERE USED

DRAWN BY	KDH	TOLERANCES	
CHECKED	TLW	FRACTION	± 1/8
ENGINEER	RJM	2 PL .XX	± .01
		3 PL .XXX	± .005
REVIEWED		ANGULAR	± 1/2°
RELEASE DATE	06/02/2009	4020	EDR NO

DIMENSIONS ARE IN INCHES AND PROVIDED PRIOR TO SURFACE TREATMENTS, UNLESS NOTED.

PHPK TECHNOLOGIES
2111 BUILDERS PLACE
COLUMBUS, OH 43204
614-486-4750 WWW.PHPK.COM

TITLE
STENNIS SPACE CENTER, A-2 TEST STAND
12" X 16" NPS, V.J. LH2 TRANSFER PIPING

SIZE B | DRAWING NUMBER 09-2584-5015 | CHG B

EST WEIGHT | DWG | SHEET 2 OF 3

-- PHPK TECHNOLOGIES PROPRIETARY --
INFORMATION ON THIS DRAWING MAY NOT BE DISCLOSED TO ANY PARTY WITHOUT WRITTEN AUTHORIZATION FROM PHPK

REVISIONS

REV	DATE	DWN	CHK'D	ENG'R	RVW'D	EDR	DESCRIPTION
A	06/04/2009	BTH	TLW	RJM		4021	1.) ADDED FLOW ARROW, 2.) ADDED PUMPOUT
B	06/25/2009	BTH	TLW	RJM		4062	1.) REMOVED FLOW ARROW, 2.) ADDED ESTIMATED WEIGHT
C	10/08/2009	KDH	RJM	RJM	RSB	4202	1.) REVISED DIM. 2.) ADDED DIM. 3.) DELETED ITEM 2. 4.) REVISED LENGTH.
D	10/19/2009	KDH	RJM	RJM	TLW	4217	1.) REVISED DIM.
E	10/26/2009	KDH	RJM	RJM	RSB	4233	1.) REVISED DIM.

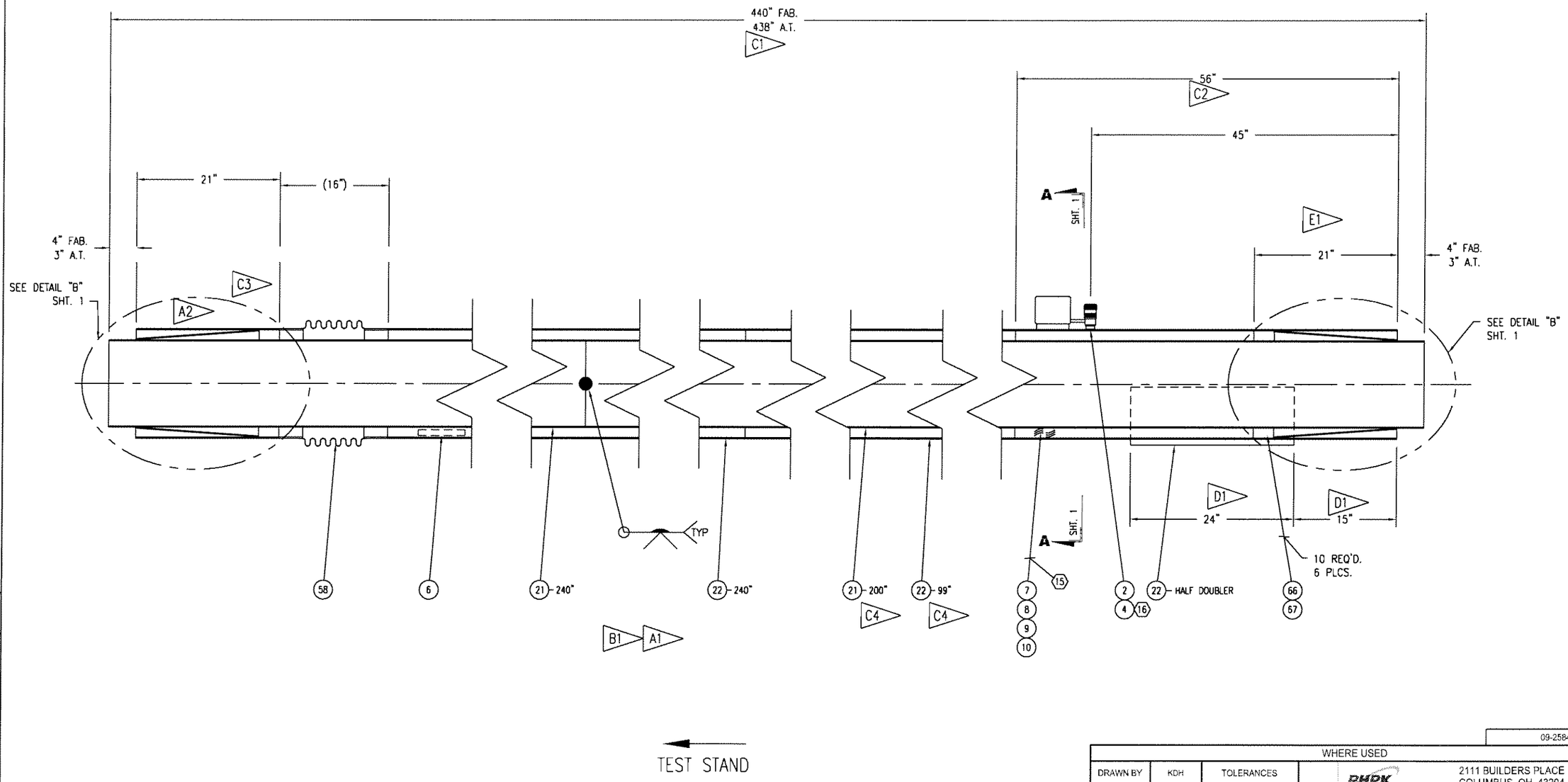

GFE
DRAWING NOT FOR CONSTRUCTION

09-2584-5000

WHERE USED

DRAWN BY	KDH	TOLERANCES	
CHECKED	TLW	FRACTION	± 1/8
ENGINEER	RJM	2 PL .XX	± .01
		3 PL .XXX	± .005
REVIEWED		ANGULAR	± 1/2°
RELEASE DATE	06/02/2009	4020	EDR NO

DIMENSIONS ARE IN INCHES AND PROVIDED PRIOR TO SURFACE TREATMENTS, UNLESS NOTED.

PHPK TECHNOLOGIES
2111 BUILDERS PLACE
COLUMBUS, OH 43204
614-486-4750 WWW.PHPK.COM

TITLE
STENNIS SPACE CENTER, A-2 TEST STAND
12" X 16" NPS, V.J. LH2 TRANSFER PIPING

SIZE B | DRAWING NUMBER 09-2584-5016 | CHG E

EST WEIGHT 2200# | DWG | SHEET 2 OF 3

-- PHPK TECHNOLOGIES PROPRIETARY --
INFORMATION ON THIS DRAWING MAY NOT BE DISCLOSED TO ANY PARTY WITHOUT WRITTEN AUTHORIZATION FROM PHPK

REVISIONS

REV	DATE	DWN	CHK'D	ENG'R	RVW'D	EDR	DESCRIPTION
A	06/04/2009	BTH	TLW	RJM		4021	1.) ADDED FLOW ARROW, 2.) ADDED PUMPOUT
B	06/25/2009	BTH	TLW	RJM		4062	1.) REMOVED FLOW ARROW, 2.) ADDED ESTIMATED WEIGHT
C	10/08/2009	KDH	RJM	RJM	RSB	4202	1.) REVISED THIS END, 2.) REVISED DIM., 3.) MADE DETAIL "C", 4.) ADDED DIM. 5.) REVISED LENGTH.
D	10/26/2009	KDH	RJM	RJM	RSB	4233	1.) ATTACHED DIM. LINE TO SPACER

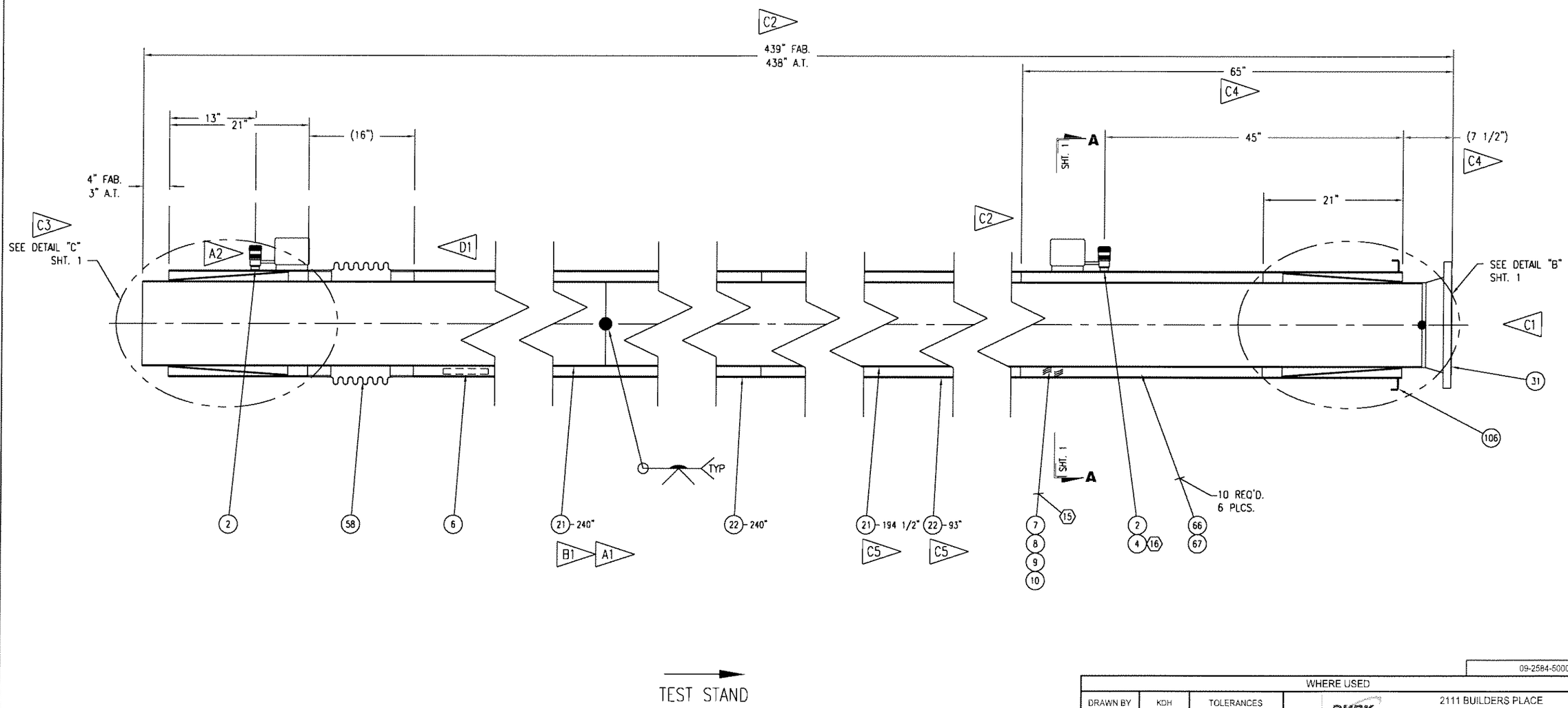

GFE
DRAWING NOT FOR CONSTRUCTION

-- PHPK TECHNOLOGIES PROPRIETARY --
INFORMATION ON THIS DRAWING MAY NOT BE DISCLOSED TO ANY PARTY WITHOUT WRITTEN AUTHORIZATION FROM PHPK

09-2584-5000

WHERE USED

DRAWN BY	KDH	TOLERANCES	
CHECKED	TLW	FRACTION	± 1/8
ENGINEER	RJM	2 PL. .XX	± .01
		3 PL. .XXX	± .005
REVIEWED		ANGULAR	± 1/2°
RELEASE DATE	06/02/2009	4020	EDR NO

DIMENSIONS ARE IN INCHES AND PROVIDED PRIOR TO SURFACE TREATMENTS, UNLESS NOTED.

PHPK TECHNOLOGIES
2111 BUILDERS PLACE
COLUMBUS, OH 43204
614-486-4750 WWW.PHPK.COM

TITLE
STENNIS SPACE CENTER, A-2 TEST STAND
12" X 16" NPS, V.J. LH2 TRANSFER PIPING

SIZE	DRAWING NUMBER	CHG
B	09-2584-5017	D

EST WEIGHT 2230# | DWG | SHEET 2 OF 3

REVISIONS

REV	DATE	DWN	CHK'D	ENG'R	RVW'D	EDR	DESCRIPTION
A	06/04/2009	BTH	TLW	RJM		4021	1.) ADDED FLOW ARROW, 2.) ADDED PUMPOUT
B	06/15/2009	BTH	TLW	RJM		4042	1.) REVISED SPOOL LENGTH, 2.) REVISED END OF SPOOL
C	10/08/2009	KDH	RJM	RJM	RSB	4202	1.) REVISED DIM. 2.) ADDED DIM. 3.) DELETED ITEMS 25, 42 (2X), 59 & 60. 4.) REVISED LENGTH. 5.) ADDED ITEM 58.

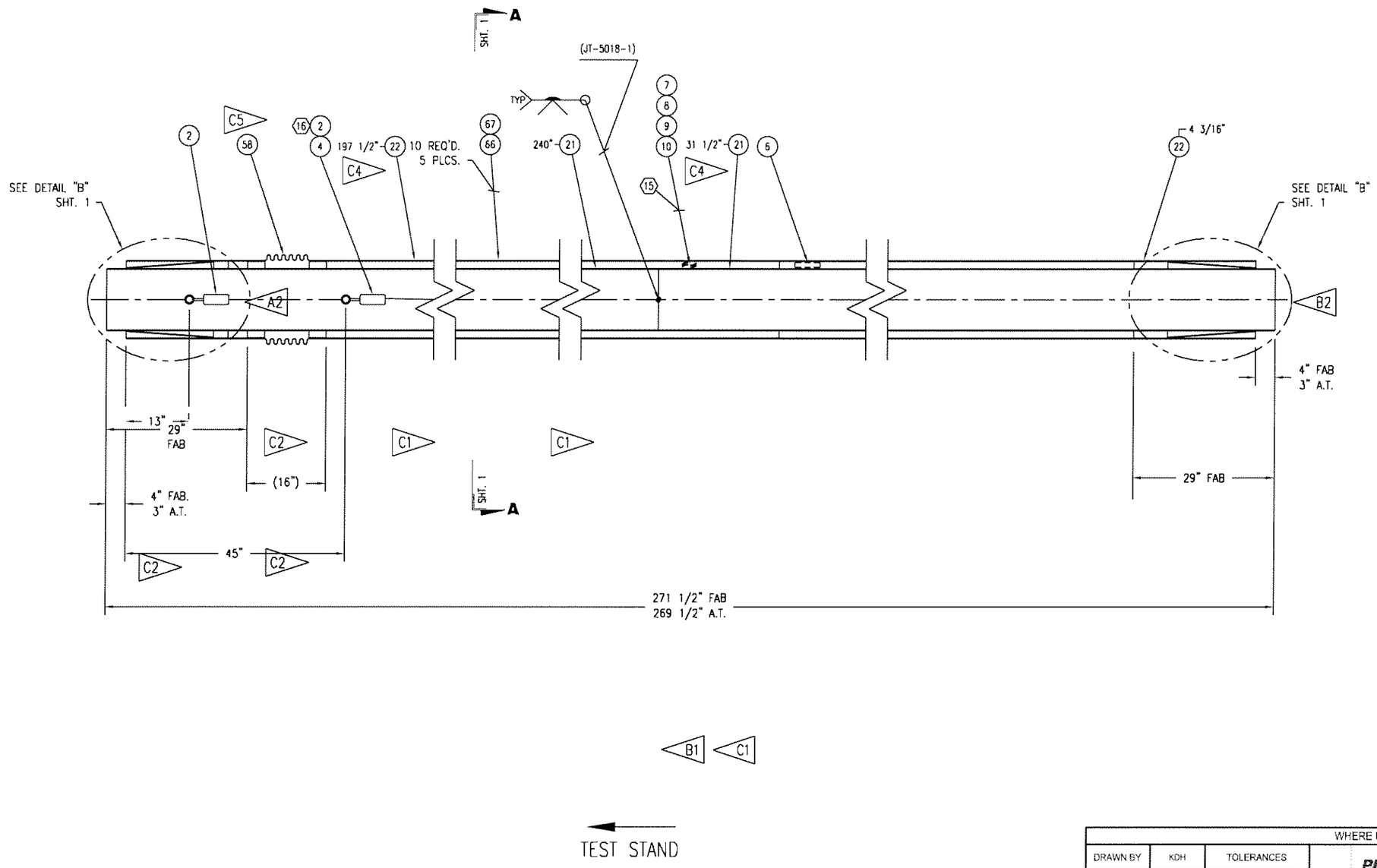

GFE
DRAWING NOT FOR CONSTRUCTION

-- PHPK TECHNOLOGIES PROPRIETARY --
INFORMATION ON THIS DRAWING MAY NOT BE DISCLOSED TO ANY PARTY WITHOUT WRITTEN AUTHORIZATION FROM PHPK

09-2584-5000

WHERE USED

DRAWN BY	KDH	TOLERANCES	
CHECKED	TLW	FRACTION	± 1/8
ENGINEER	RJM	2 PL .XX	± .01
		3 PL .XXX	± .005
REVIEWED		ANGULAR	± 1/2°
RELEASE DATE	06/02/2009	4020	EDR NO

DIMENSIONS ARE IN INCHES AND PROVIDED PRIOR TO SURFACE TREATMENTS, UNLESS NOTED.

PHPK TECHNOLOGIES
2111 BUILDERS PLACE
COLUMBUS, OH 43204
614-486-4750 WWW.PHPK.COM

TITLE
STENNIS SPACE CENTER, A-2 TEST STAND
12" X 16" NPS, V.J. LH2 TRANSFER PIPING

SIZE	DRAWING NUMBER	CHG
B	09-2584-5018	C

EST WEIGHT 1400# | DWG | SHEET 2 OF 3

REVISIONS

REV	DATE	DWN	CHK'D	ENG'R	RVW'D	EDR	DESCRIPTION
A	06/04/2009	BTH	TLW	RJM		4021	1.) ADDED FLOW ARROW, 2.) ADDED PUMPOUT
B	06/15/2009	BTH	TLW	RJM		4041	1.) REVISED LINE LAYOUT, 2.) RELOCATED PUMPOUT, 3.) ADDED PUMPOUT
C	10/08/2009	KDH	RJM	RJM	RSB	4202	1.) REVISED ENTIRE SPOOL
D	03/08/2010	KDH	RJM	RJM	TLW	4475	1.) REVISED ENTIRE SPOOL

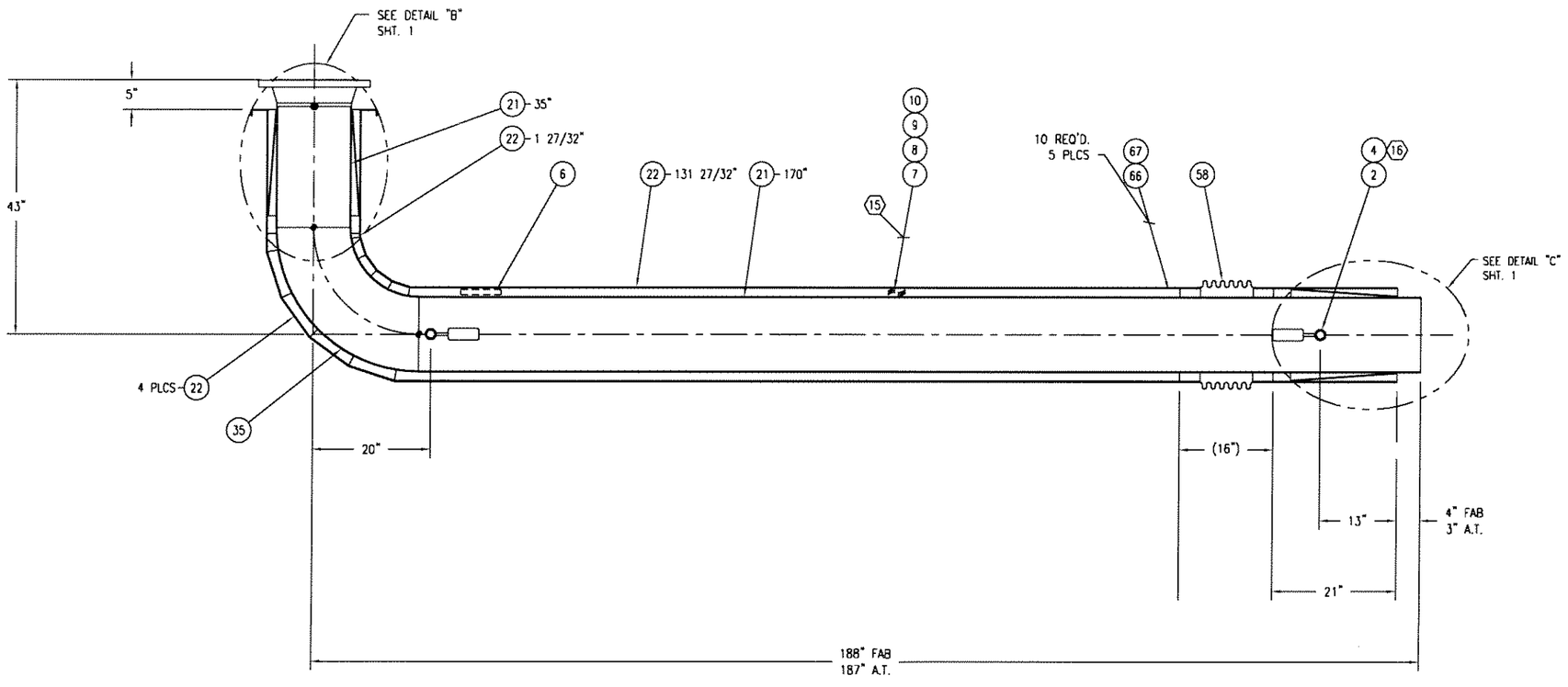

GFE
DRAWING NOT FOR CONSTRUCTION

TEST STAND

-- PHPK TECHNOLOGIES PROPRIETARY --
INFORMATION ON THIS DRAWING MAY NOT BE DISCLOSED TO ANY PARTY WITHOUT WRITTEN AUTHORIZATION FROM PHPK

09-2584-5000

WHERE USED

DRAWN BY	KDH	TOLERANCES	
CHECKED	TLW	FRACTION	± 1/8
ENGINEER	RJM	2 PL .XX	± .01
		3 PL .XXX	± .005
REVIEWED		ANGULAR	± 1/2°
RELEASE DATE	06/02/2009	4020 EDR NO	

DIMENSIONS ARE IN INCHES AND PROVIDED PRIOR TO SURFACE TREATMENTS, UNLESS NOTED.

PHPK TECHNOLOGIES
2111 BUILDERS PLACE
COLUMBUS, OH 43204
614-486-4750 WWW.PHPK.COM

TITLE
STENNIS SPACE CENTER, A-2 TEST STAND
12" X 16" NPS, V.J. LH2 TRANSFER PIPING

SIZE B | DRAWING NUMBER 09-2584-5019 | CHG D

EST WEIGHT 3080# | DWG | SHEET 2 OF 3

REVISIONS

REV	DATE	DWN	CHK'D	ENG'R	RVW'D	EDR	DESCRIPTION
A	10/08/2009	KDH	RJM	RJM	RSB	4202	1.) REVISED THIS END. 2.) REVISED DIM. 3.) MADE DETAIL "C". 4.) ADDED DIM. 5.) DELETED ITEM 2. 6.) REVISED LENGTH.

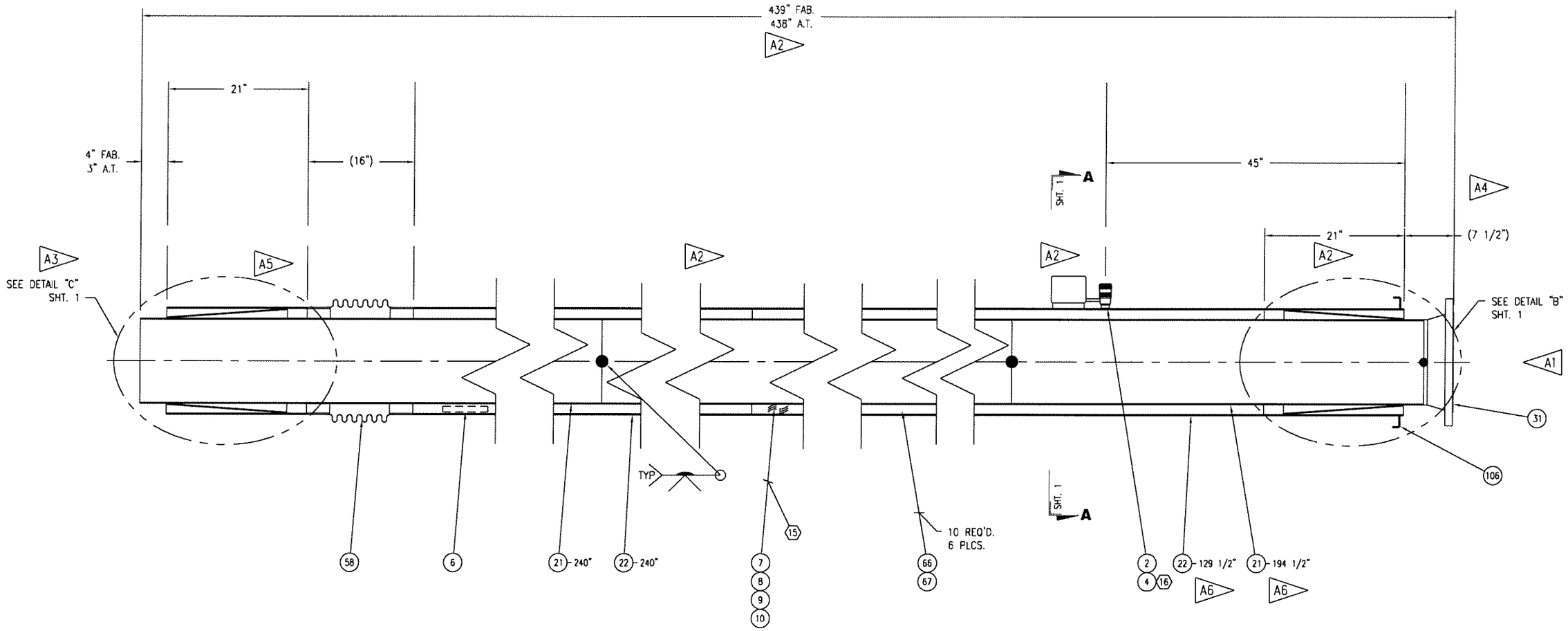

TEST STAND

GFE
DRAWING NOT FOR CONSTRUCTION

-- PHPK TECHNOLOGIES PROPRIETARY --
INFORMATION ON THIS DRAWING MAY NOT BE DISCLOSED TO ANY PARTY WITHOUT WRITTEN AUTHORIZATION FROM PHPK

09-2584-5000

WHERE USED

DRAWN BY	BTH	TOLERANCES	
CHECKED	TLW	FRACTION	± 1/8
ENGINEER	RJM	2 PL .XX	± .01
		3 PL .XXX	± .005
REVIEWED		ANGULAR	± 1/2°
RELEASE DATE	06/11/2009	4032	EDR NO

DIMENSIONS ARE IN INCHES AND PROVIDED PRIOR TO SURFACE TREATMENTS, UNLESS NOTED.

PHPK TECHNOLOGIES
2111 BUILDERS PLACE
COLUMBUS, OH 43204
614-486-4750 WWW.PHPK.COM

TITLE
STENNIS SPACE CENTER, A-2 TEST STAND
12" X 16" NPS, V.J. LH2 TRANSFER PIPING

SIZE B | DRAWING NUMBER 09-2584-5020 | CHG A

EST WEIGHT 2230# | DWG | SHEET 2 OF 3

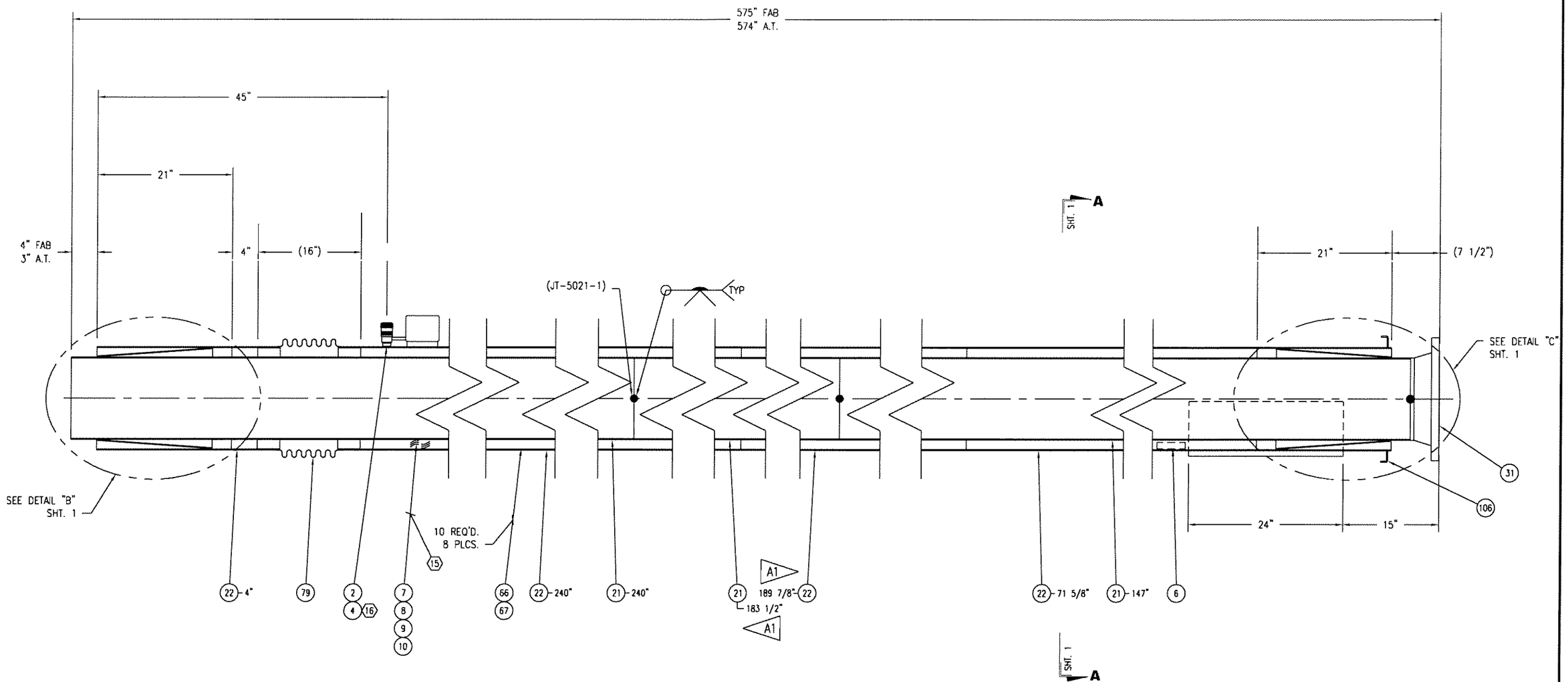

TEST STAND

GFE
DRAWING NOT FOR CONSTRUCTION

REV	DATE	DWN	CHK'D	ENG'R	RVW'D	EDR	DESCRIPTION
A	06/26/2009	BTH	TLW	RJM		4065	1.) REVISED LENGTH
B	10/26/2009	KDH	RJM	RJM	RSB	4233	1.) REVISED ENTIRE SPOOL

REVISIONS

09-2584-5000

WHERE USED

DRAWN BY	BTH	TOLERANCES	
CHECKED	TLW	FRACTION	± 1/8
ENGINEER	RJM	2 PL .XX	± .01
		3 PL .XXX	± .005
REVIEWED		ANGULAR	± 1/2°
RELEASE DATE	06/22/2009	4055 EDR NO	

DIMENSIONS ARE IN INCHES AND PROVIDED PRIOR TO SURFACE TREATMENTS, UNLESS NOTED.

PHPK TECHNOLOGIES
2111 BUILDERS PLACE
COLUMBUS, OH 43204
614-486-4750 WWW.PHPK.COM

TITLE
STENNIS SPACE CENTER, A-2 TEST STAND
12" X 16" NPS, V.J. LH2 TRANSFER PIPING

SIZE B | DRAWING NUMBER 09-2584-5021 | CHG B

EST WEIGHT 2700# | DWG | SHEET 2 OF 3

-- PHPK TECHNOLOGIES PROPRIETARY --
INFORMATION ON THIS DRAWING MAY NOT BE DISCLOSED TO ANY PARTY WITHOUT WRITTEN AUTHORIZATION FROM PHPK

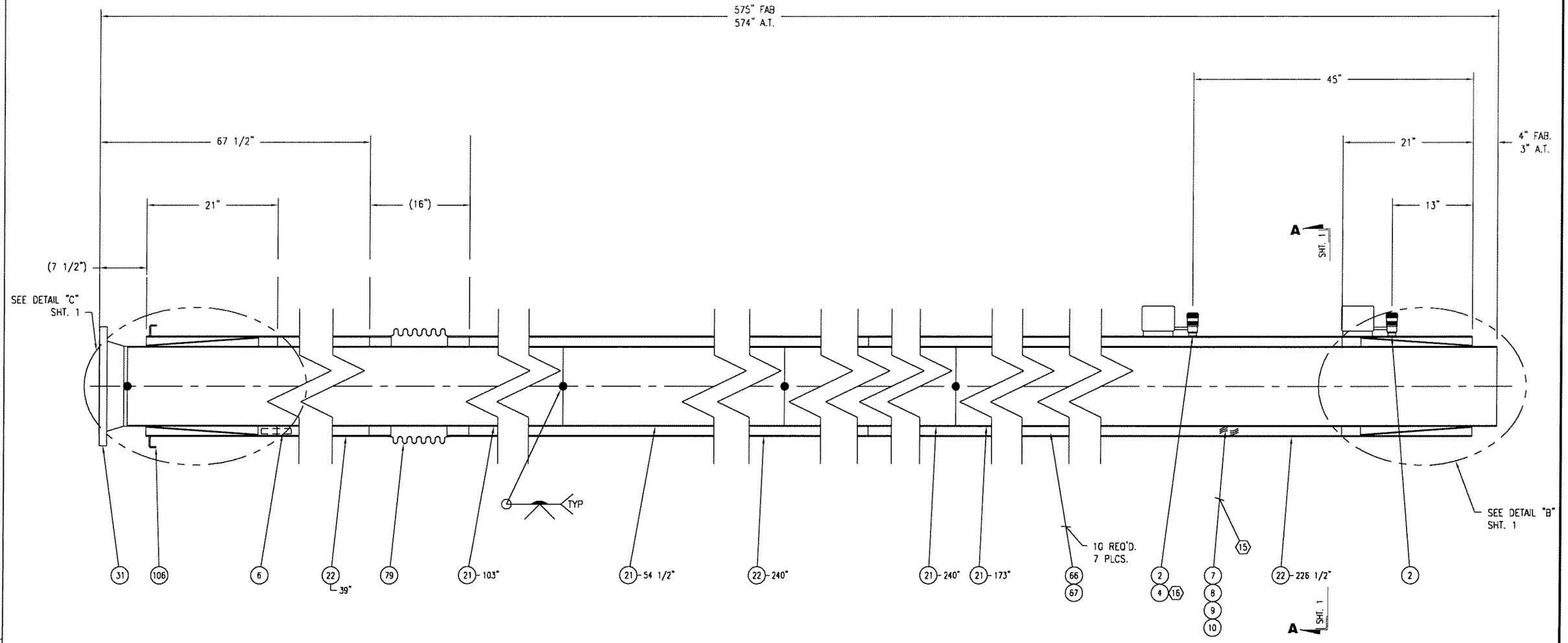

GFE
DRAWING NOT FOR CONSTRUCTION

TEST STAND

REV	DATE	DWN	CHK'D	ENG'R	RV'W'D	EDR	DESCRIPTION
A	10/12/2009	KDH	RJM	RJM	RSB		1.) REVISED ENTIRE SPOOL

REVISIONS

09-2584-5000

WHERE USED

DRAWN BY	BTH	TOLERANCES	
CHECKED	TLW	FRACTION	± 1/8
ENGINEER	RJM	2 PL .XX	± .01
		3 PL .XXX	± .005
REVIEWED		ANGULAR	± 1/2°
RELEASE DATE	06/22/2009	4055 EDR NO	

PHPK TECHNOLOGIES
2111 BUILDERS PLACE
COLUMBUS, OH 43204
614-486-4750 WWW.PHPK.COM

TITLE
STENNIS SPACE CENTER, A-2 TEST STAND
12" X 16" NPS, V.J. LH2 TRANSFER PIPING

SIZE B | DRAWING NUMBER 09-2584-5022 | CHG A

EST WEIGHT 2635# | DWG | SHEET 2 OF 3

DIMENSIONS ARE IN INCHES AND PROVIDED PRIOR TO SURFACE TREATMENTS, UNLESS NOTED.

-- PHPK TECHNOLOGIES PROPRIETARY --
INFORMATION ON THIS DRAWING MAY NOT BE DISCLOSED TO ANY PARTY WITHOUT WRITTEN AUTHORIZATION FROM PHPK

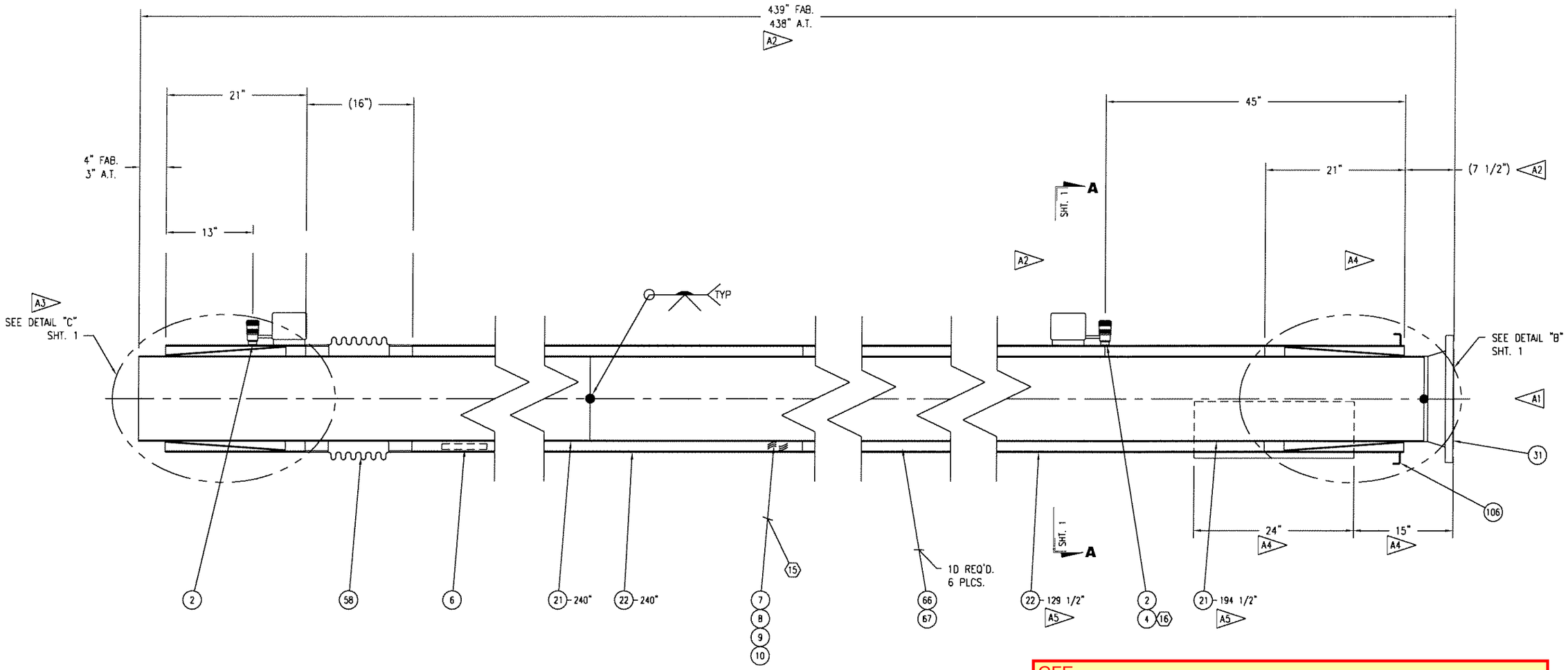

GFE
DRAWING NOT FOR CONSTRUCTION

TEST STAND

09-2584-5000

WHERE USED

DRAWN BY	BTH	TOLERANCES	
CHECKED	TLW	FRACTION	± 1/8
ENGINEER	RJM	2 PL .XX	± .01
		3 PL .XXX	± .005
REVIEWED		ANGULAR	± 1/2°
RELEASE DATE	06/11/2009	4032	EDR NO

DIMENSIONS ARE IN INCHES AND PROVIDED PRIOR TO SURFACE TREATMENTS, UNLESS NOTED.

PHPK TECHNOLOGIES
2111 BUILDERS PLACE
COLUMBUS, OH 43204
614-486-4750 WWW.PHPK.COM

TITLE
STENNIS SPACE CENTER, A-2 TEST STAND
12" X 16" NPS, V.J. LH2 TRANSFER PIPING

SIZE B | DRAWING NUMBER 09-2584-5023 | CHG A

EST WEIGHT 2230# | DWG | SHEET 2 OF 3

-- PHPK TECHNOLOGIES PROPRIETARY --
INFORMATION ON THIS DRAWING MAY NOT BE DISCLOSED TO ANY PARTY WITHOUT WRITTEN AUTHORIZATION FROM PHPK

REVISIONS

REV	DATE	DWN	CHK'D	ENG'R	RVW'D	EDR	DESCRIPTION
A	10/08/2009	KDH	RJM	RJM	RSB	4202	1.) REVISED THIS END. 2.) REVISED DIM. 3.) MADE DETAIL "C". 4.) ADDED DIM. 5.) REVISED LENGTH.

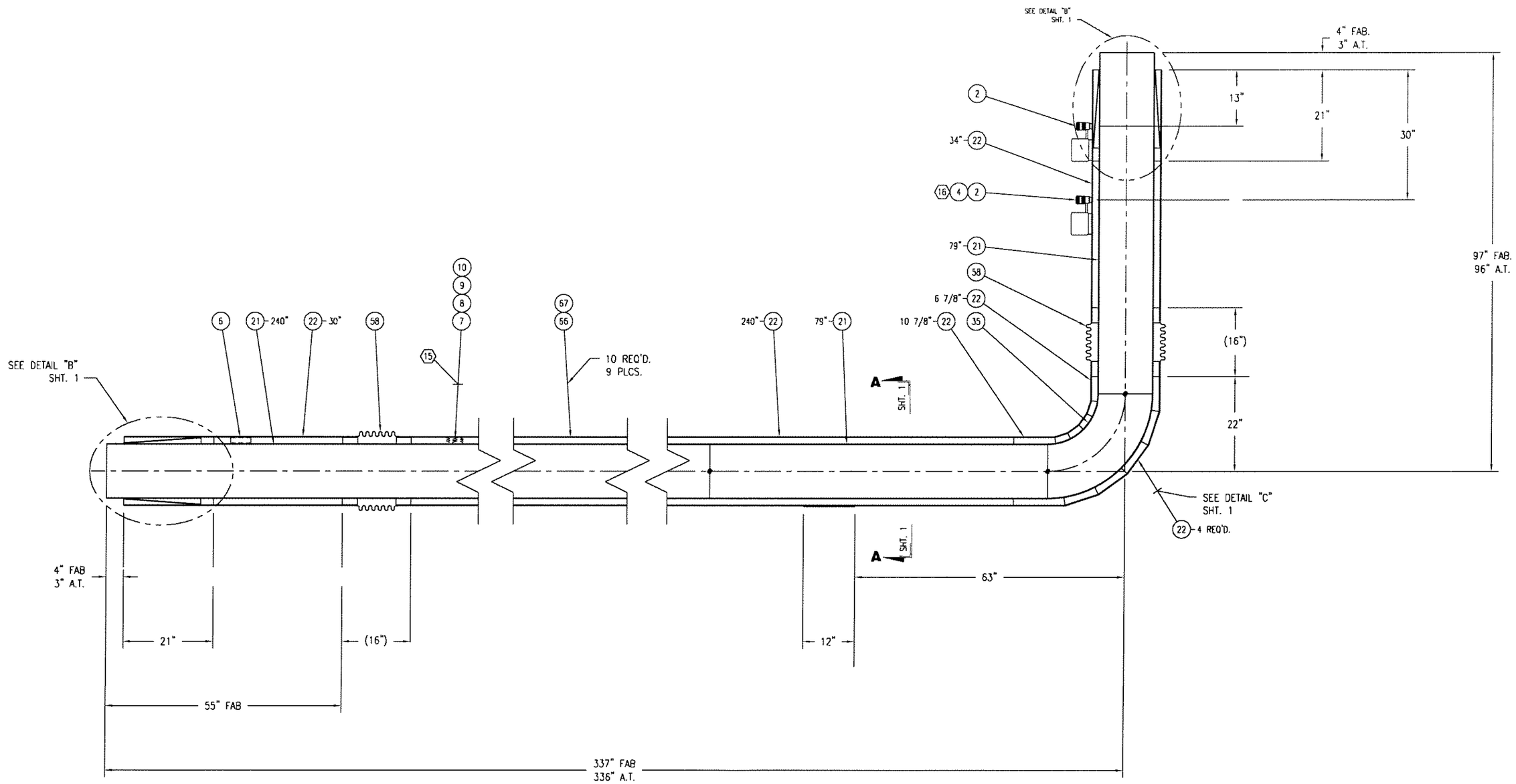

GFE
DRAWING NOT FOR CONSTRUCTION

TEST STAND

REV	DATE	DWN	CHK'D	ENG'R	RVW'D	EDR	DESCRIPTION
A	10/26/2009	KDH	RJM	RJM	RSB	4233	1.) ADDED TEST STAND DIRECTION

REVISIONS

09-2584-5000

WHERE USED

DRAWN BY	BTH	TOLERANCES	
CHECKED	TLW	FRACTION	± 1/8
ENGINEER	RJM	2 PL .XX	± .01
		3 PL .XXX	± .005
REVIEWED		ANGULAR	± 1/2°
RELEASE DATE	06/11/2009	4032	
		EDR NO	

DIMENSIONS ARE IN INCHES AND PROVIDED PRIOR TO SURFACE TREATMENTS, UNLESS NOTED.

PHPK TECHNOLOGIES
2111 BUILDERS PLACE
COLUMBUS, OH 43204
614-486-4750 WWW.PHPK.COM

TITLE
STENNIS SPACE CENTER, A-2 TEST STAND
12" X 16" NPS, V.J. LH2 TRANSFER PIPING

SIZE B | DRAWING NUMBER 09-2584-5024 | CHG A

EST WEIGHT 2000# | DWG | SHEET 2 OF 3

-- PHPK TECHNOLOGIES PROPRIETARY --
INFORMATION ON THIS DRAWING MAY NOT BE DISCLOSED TO ANY PARTY WITHOUT WRITTEN AUTHORIZATION FROM PHPK

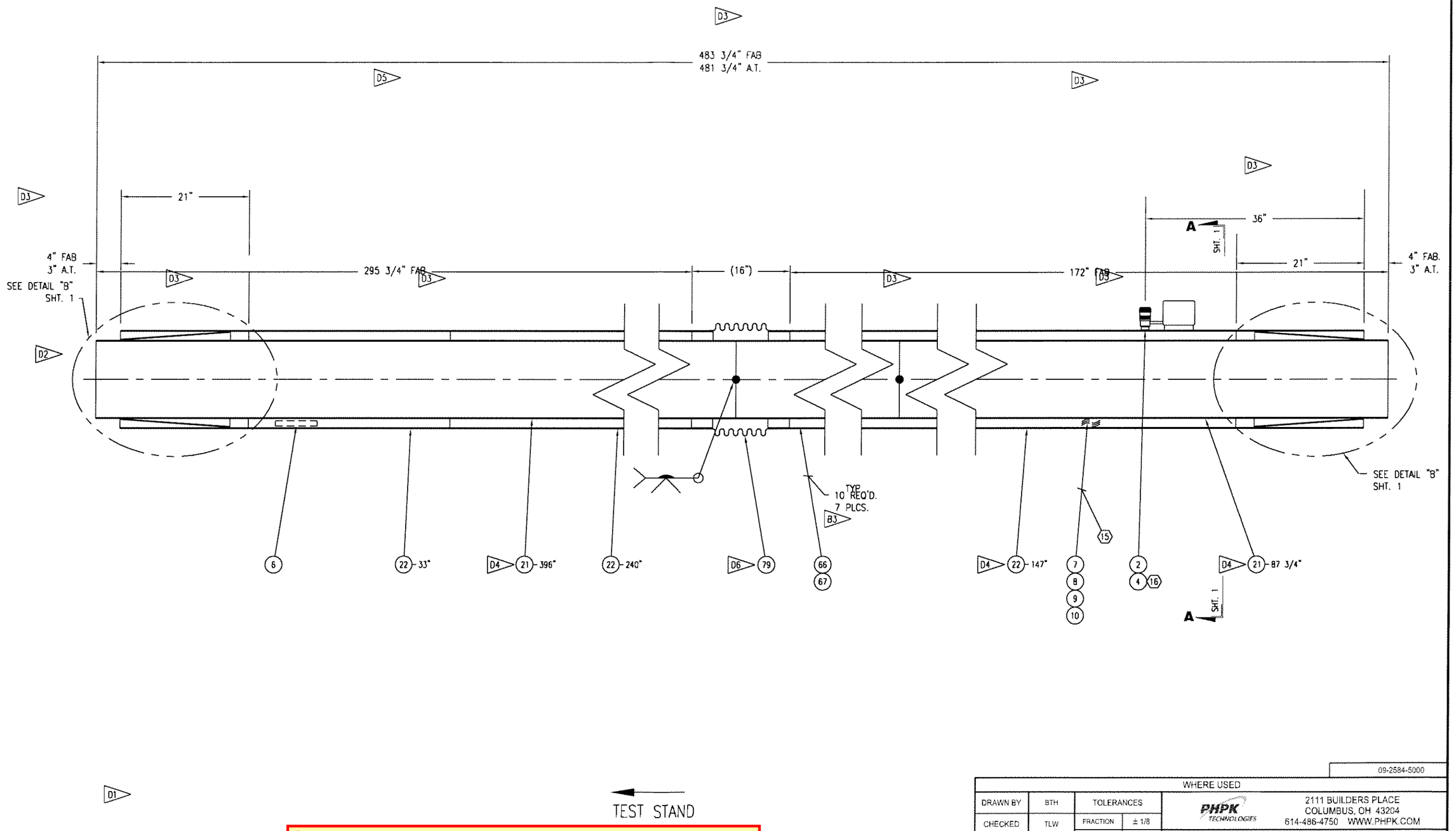

GFE
DRAWING NOT FOR CONSTRUCTION

REVISIONS

REV	DATE	DWN	CHK'D	ENG'R	RVW'D	EDR	DESCRIPTION
A	10/13/2009	KDH	RJM	RJM	RSB		1.) REVISED ENTIRE SPOOL
B	10/19/2009	KDH	RJM	RJM	RSB		1.) ADDED DIM., 2.) REVISED DIM., 3.) WAS "6 PLCS."
C	10/26/2009	KDH	RJM	RJM	RSB	4233	1.) REMOVED DOUBLER & DIMENSIONS, 2.) MOVED SECTION D-D CALL-OUT
D	03/08/2010	KDH	RJM	RJM	TLW	4475	1) REMOVED SECTION D-D, 2) REVISED THIS END., 3) REVISED DIM., 4) REVISED CUT-LENGTH, 5) ADDED DIM., 6) CHANGED ITEM

-- PHPK TECHNOLOGIES PROPRIETARY --
INFORMATION ON THIS DRAWING MAY NOT BE DISCLOSED TO ANY PARTY WITHOUT WRITTEN AUTHORIZATION FROM PHPK

09-2584-5000

WHERE USED

DRAWN BY	BTH	TOLERANCES	
CHECKED	TLW	FRACTION	± 1/8
ENGINEER	RJM	2 PL .XX	± .01
		3 PL .XXX	± .005
REVIEWED		ANGULAR	± 1/2°
RELEASE DATE	06/22/2009	4055 EDR NO	

DIMENSIONS ARE IN INCHES AND PROVIDED PRIOR TO SURFACE TREATMENTS, UNLESS NOTED.

PHPK TECHNOLOGIES
2111 BUILDERS PLACE
COLUMBUS, OH 43204
614-486-4750 WWW.PHPK.COM

TITLE
STENNIS SPACE CENTER, A-2 TEST STAND
12" X 16" NPS, V.J. LH2 TRANSFER PIPING

SIZE	DRAWING NUMBER	CHG
B	09-2584-5025	D

EST WEIGHT | DWG | SHEET 2 OF 3

REVISIONS

REV	DATE	DWN	CHK'D	ENG'R	RVW'D	EDR	DESCRIPTION
A	10/13/2009	KDH	RJM	RJM	RSB		1.) REVISED ENTIRE SPOOL
B	10/26/2009	KDH	RJM	RJM	RSB	4233	1.) REMOVED DOUBLER AND DIMENSIONS
C	02/11/2010	KDH	RJM	RJM	RSB	4418	STARTED WITH REV. "N/C" FOR THESE REVISIONS, 1) REVISED DIM., 2) ADDED ITEM, 3) ADDED DIM., 4) ADDED DETAIL "D", 5) REVISED CUT-LENGTH
D	03/08/2010	KDH	RJM	RJM	TLW	4475	1.) REVISED DIM., 2) REVISED THIS END

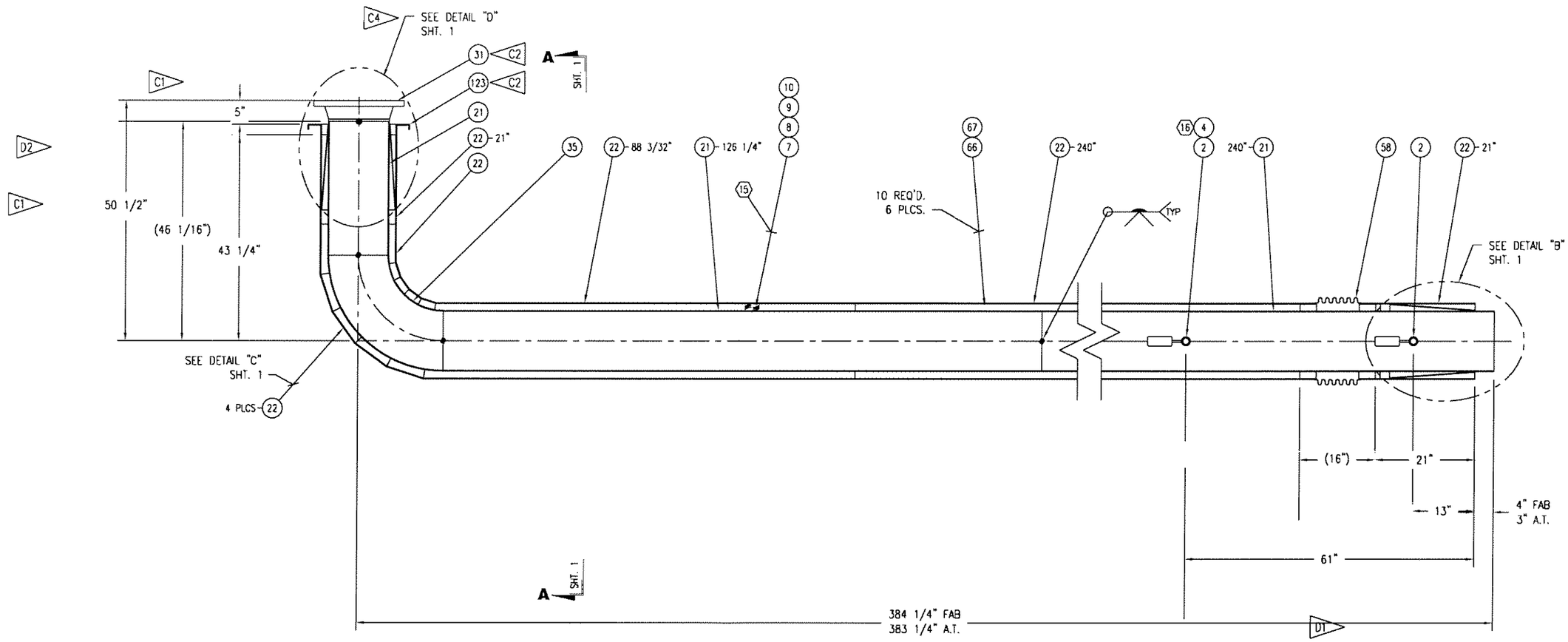

TEST STAND

GFE
DRAWING NOT FOR CONSTRUCTION

-- PHPK TECHNOLOGIES PROPRIETARY --
INFORMATION ON THIS DRAWING MAY NOT BE DISCLOSED TO ANY PARTY WITHOUT WRITTEN AUTHORIZATION FROM PHPK

09-2584-5000

WHERE USED

DRAWN BY	BTH	TOLERANCES	
CHECKED	TLW	FRACTION	± 1/8
ENGINEER	RJM	2 PL .XX	± .01
		3 PL .XXX	± .005
REVIEWED		ANGULAR	± 1/2°
RELEASE DATE	06/22/2009	4055 EDR NO	

DIMENSIONS ARE IN INCHES AND PROVIDED PRIOR TO SURFACE TREATMENTS, UNLESS NOTED.

PHPK TECHNOLOGIES
2111 BUILDERS PLACE
COLUMBUS, OH 43204
614-486-4750 WWW.PHPK.COM

TITLE
STENNIS SPACE CENTER, A-2 TEST STAND
12" X 16" NPS, V.J. LH2 TRANSFER PIPING

SIZE B | DRAWING NUMBER 09-2584-5026 | CHG D

EST WEIGHT | DWG | SHEET 2 OF 3

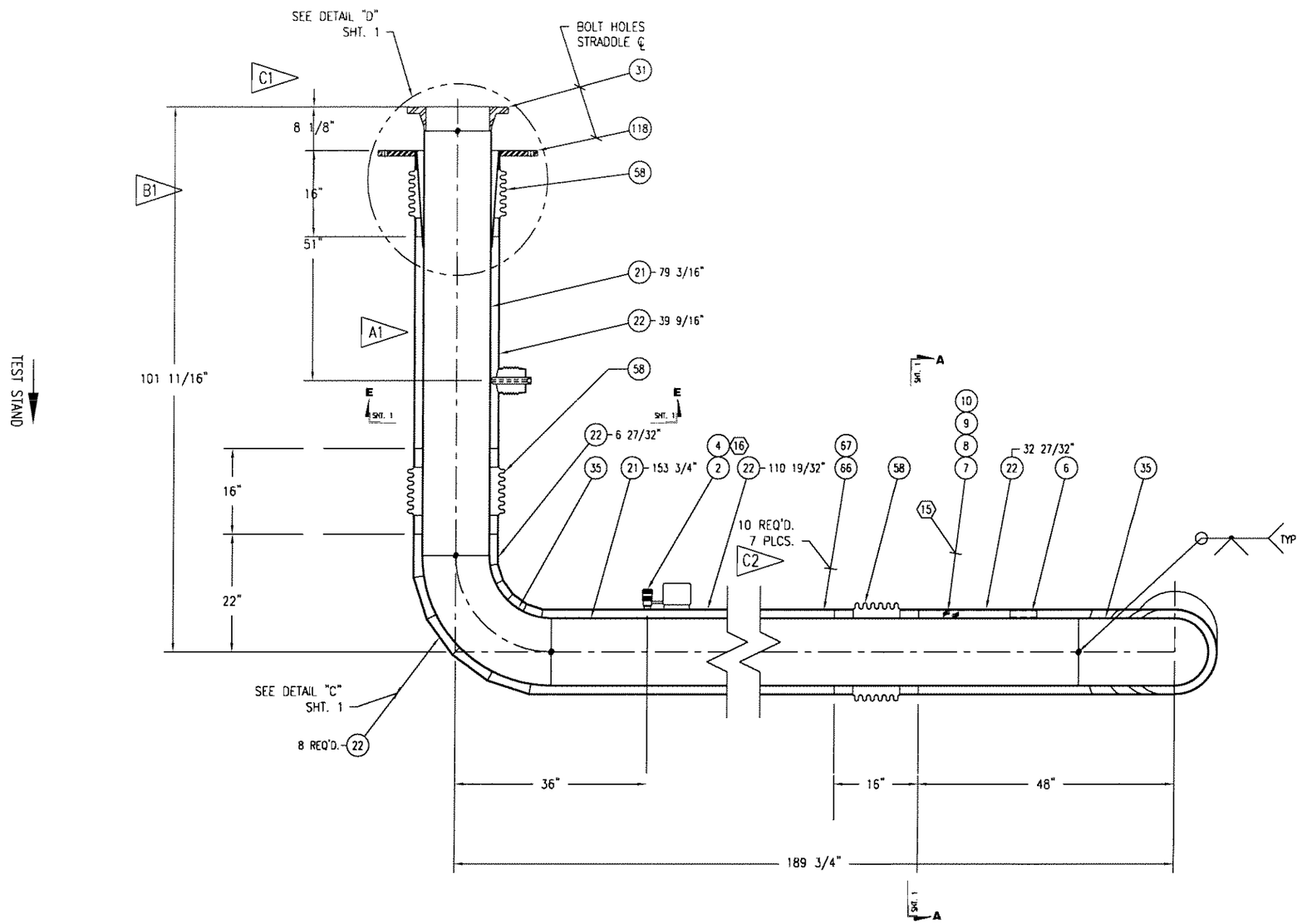

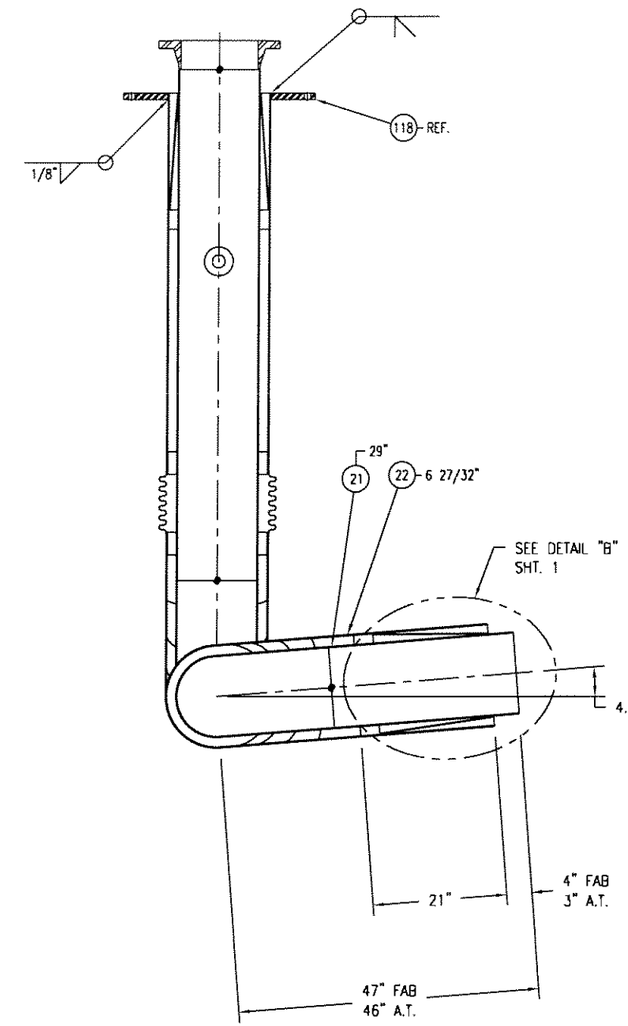

TEST STAND

GFE
DRAWING NOT FOR CONSTRUCTION

REVISIONS

REV	DATE	DWN	CHK'D	ENG'R	RVW'D	EDR	DESCRIPTION
A	10/26/2009	KDH	RJM	RJM	RSB	4233	1.) REMOVED DOUBLER AND DIMENSIONS
B	02/03/2010	KDH	RJM	RJM	TLW		1) REMOVED DIM.
C	03/08/2010	KDH	RJM	RJM	TLW	4475	1) REVISED THIS END, 2) REVISED QTY.

09-2584-5000

WHERE USED

DRAWN BY	KDH	TOLERANCES	
CHECKED	RJM	FRACTION	± 1/8
ENGINEER	RJM	2 PL .XX	± .01
		3 PL .XXX	± .005
REVIEWED	RSB	ANGULAR	± 1/2°
RELEASE DATE	10/14/2009	EDR NO	

DIMENSIONS ARE IN INCHES AND PROVIDED PRIOR TO SURFACE TREATMENTS, UNLESS NOTED.

PHPK TECHNOLOGIES
2111 BUILDERS PLACE
COLUMBUS, OH 43204
614-486-4750 WWW.PHPK.COM

TITLE
STENNIS SPACE CENTER, A-2 TEST STAND
12" X 16" NPS, V.J. LH2 TRANSFER PIPING

SIZE	DRAWING NUMBER	CHG
B	09-2584-5027	C

EST WEIGHT | DWG | SHEET 2 OF 3

-- PHPK TECHNOLOGIES PROPRIETARY --
INFORMATION ON THIS DRAWING MAY NOT BE DISCLOSED TO ANY PARTY WITHOUT WRITTEN AUTHORIZATION FROM PHPK

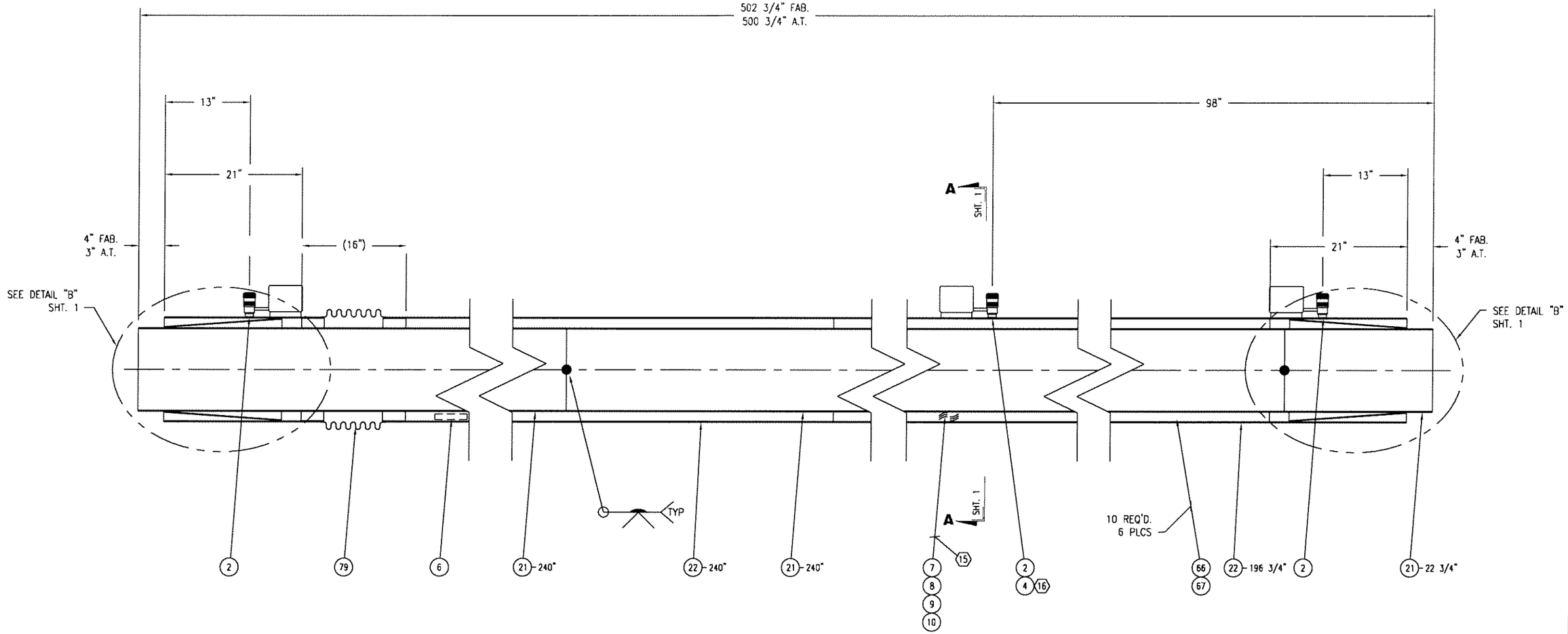

TEST STAND

GFE
DRAWING NOT FOR CONSTRUCTION

REV	DATE	DWN	CHK'D	ENG'R	RVW'D	EDR	DESCRIPTION
A	10/26/2009	KDH	RJM	RJM	RSB	4233	1.) REVISED ENTIRE SPOOL

REVISIONS

09-2584-5000

WHERE USED

DRAWN BY	KDH	TOLERANCES	
CHECKED	TLW	FRACTION	± 1/8
ENGINEER	RJM	2 PL .XX	± .01
		3 PL .XXX	± .005
REVIEWED		ANGULAR	± 1/2°
RELEASE DATE	05/18/2009	EDR NO	

DIMENSIONS ARE IN INCHES AND PROVIDED PRIOR TO SURFACE TREATMENTS, UNLESS NOTED.

PHPK TECHNOLOGIES
2111 BUILDERS PLACE
COLUMBUS, OH 43204
614-486-4750 WWW.PHPK.COM

TITLE
STENNIS SPACE CENTER, A-2 TEST STAND
12" X 16" NPS, V.J. LH2 TRANSFER PIPING

SIZE B | DRAWING NUMBER 09-2584-5028 | CHG A

EST WEIGHT | DWG | SHEET 2 OF 3

-- PHPK TECHNOLOGIES PROPRIETARY --
INFORMATION ON THIS DRAWING MAY NOT BE DISCLOSED TO ANY PARTY WITHOUT WRITTEN AUTHORIZATION FROM PHPK

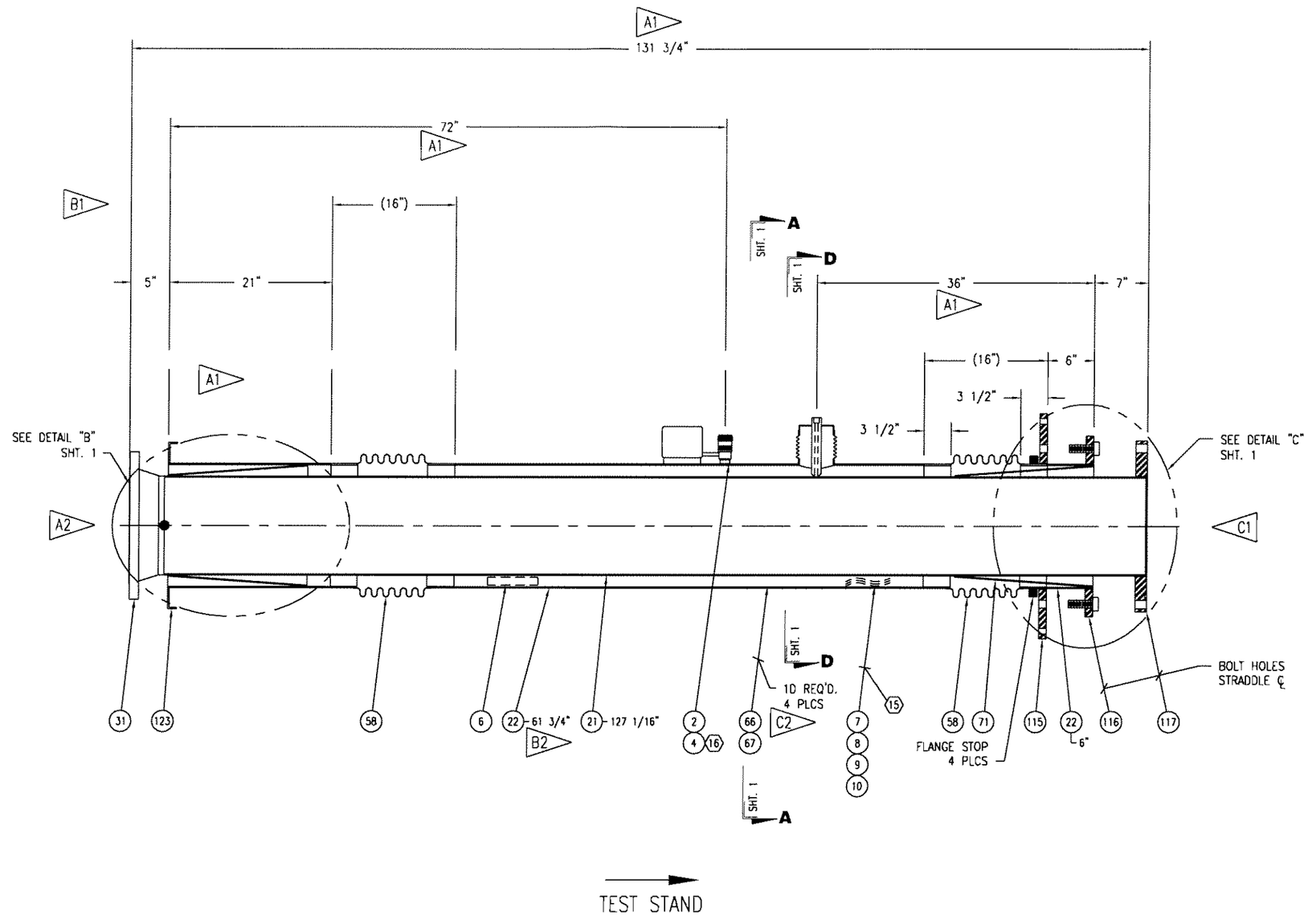

GFE
DRAWING NOT FOR CONSTRUCTION

REVISIONS

REV	DATE	DWN	CHK'D	ENG'R	RVW'D	EDR	DESCRIPTION
A	02/03/2010	KDH	RJM	RJM	TLW		1) REVISED DIM., 2) REVISED THIS END
B	02/22/2010	KDH	RJM	RJM	TLW		1) REVISED DIM., 2) REVISED CUT-LENGTH
C	03/08/2010	KDH	RJM	RJM	TLW	4475	1) REVISED THIS END, 2) REVISED QTY.

09-2584-5000

WHERE USED

DRAWN BY	KDH	TOLERANCES	
CHECKED	RJM	FRACTION	± 1/8
ENGINEER	RJM	2 PL .XX	± .01
REVIEWED	RSB	3 PL .XXX	± .005
		ANGULAR	± 1/2°
RELEASE DATE	10/26/2009	4233 EDR NO	

DIMENSIONS ARE IN INCHES AND PROVIDED PRIOR TO SURFACE TREATMENTS, UNLESS NOTED.

PHPK TECHNOLOGIES
2111 BUILDERS PLACE
COLUMBUS, OH 43204
614-486-4750 WWW.PHPK.COM

TITLE
STENNIS SPACE CENTER, A-2 TEST STAND
12" X 16" NPS, V.J. LH2 TRANSFER PIPING

SIZE B | DRAWING NUMBER 09-2584-5029 | CHG C

EST WEIGHT | DWG | SHEET 2 OF 3

-- PHPK TECHNOLOGIES PROPRIETARY --
INFORMATION ON THIS DRAWING MAY NOT BE DISCLOSED TO ANY PARTY WITHOUT WRITTEN AUTHORIZATION FROM PHPK

-- PHPK TECHNOLOGIES PROPRIETARY --

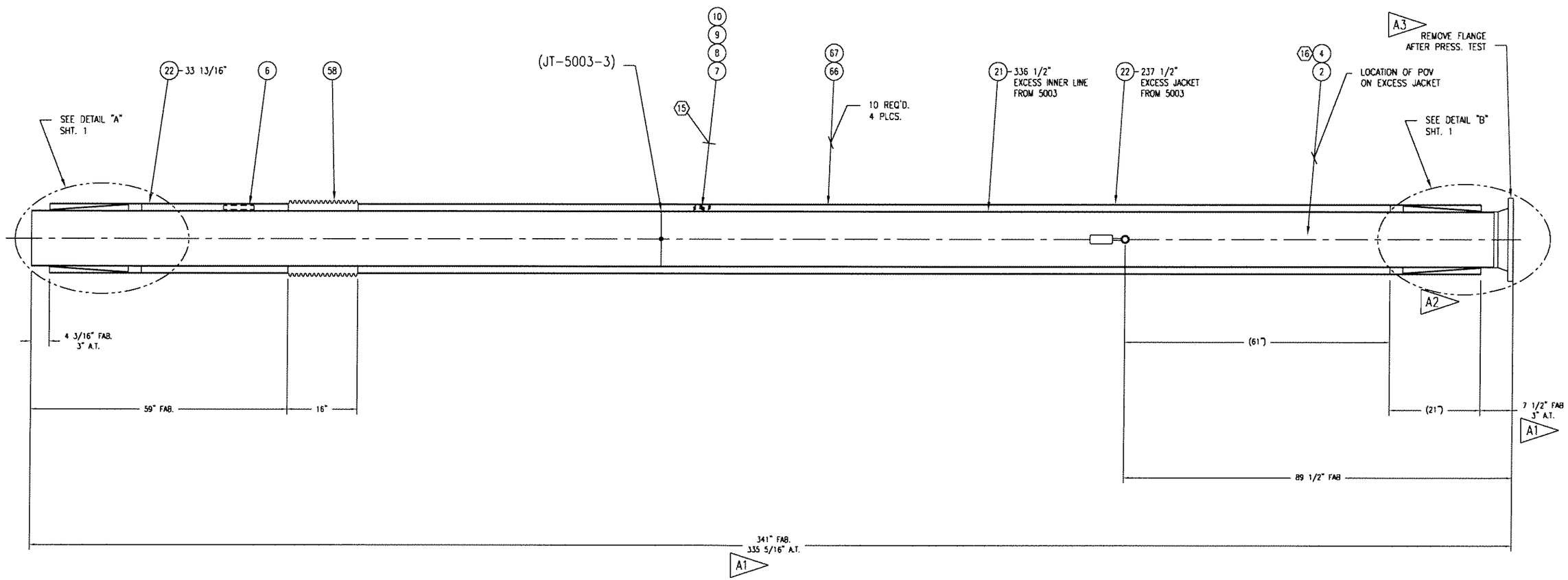

TEST STAND

GFE
DRAWING NOT FOR CONSTRUCTION

REV	DATE	DWN	CHK'D	ENG'R	RV'W'D	EDR	DESCRIPTION
A	02/12/2010	KDH	RJM	RJM	TLW	4418	1) REVISED DIMENSION, 2) REMOVED RING, 3) ADDED NOTE.

REVISIONS

WHERE USED

DRAWN BY	KDH	TOLERANCES	
CHECKED	RJM	FRACTION	± 1/8
ENGINEER	RJM	2 PL .XX	± .01
		3 PL .XXX	± .005
REVIEWED	TLW	ANGULAR	± 1/2°
RELEASE DATE	10/05/2009	4195 EDR NO	

DIMENSIONS ARE IN INCHES AND PROVIDED PRIOR TO SURFACE TREATMENTS, UNLESS NOTED.

PHPK TECHNOLOGIES
2111 BUILDERS PLACE
COLUMBUS, OH 43204
614-486-4750 WWW.PHPK.COM

TITLE
STENNIS SPACE CENTER, A-2 TEST STAND
12" X 16" NPS, V.J. LH2 TRANSFER PIPING

SIZE	DRAWING NUMBER	CHG
B	09-2584-5036	A

EST WEIGHT 1800# | DWG | SHEET 2 OF 3

-- PHPK TECHNOLOGIES PROPRIETARY --
INFORMATION ON THIS DRAWING MAY NOT BE DISCLOSED TO ANY PARTY WITHOUT WRITTEN AUTHORIZATION FROM PHPK

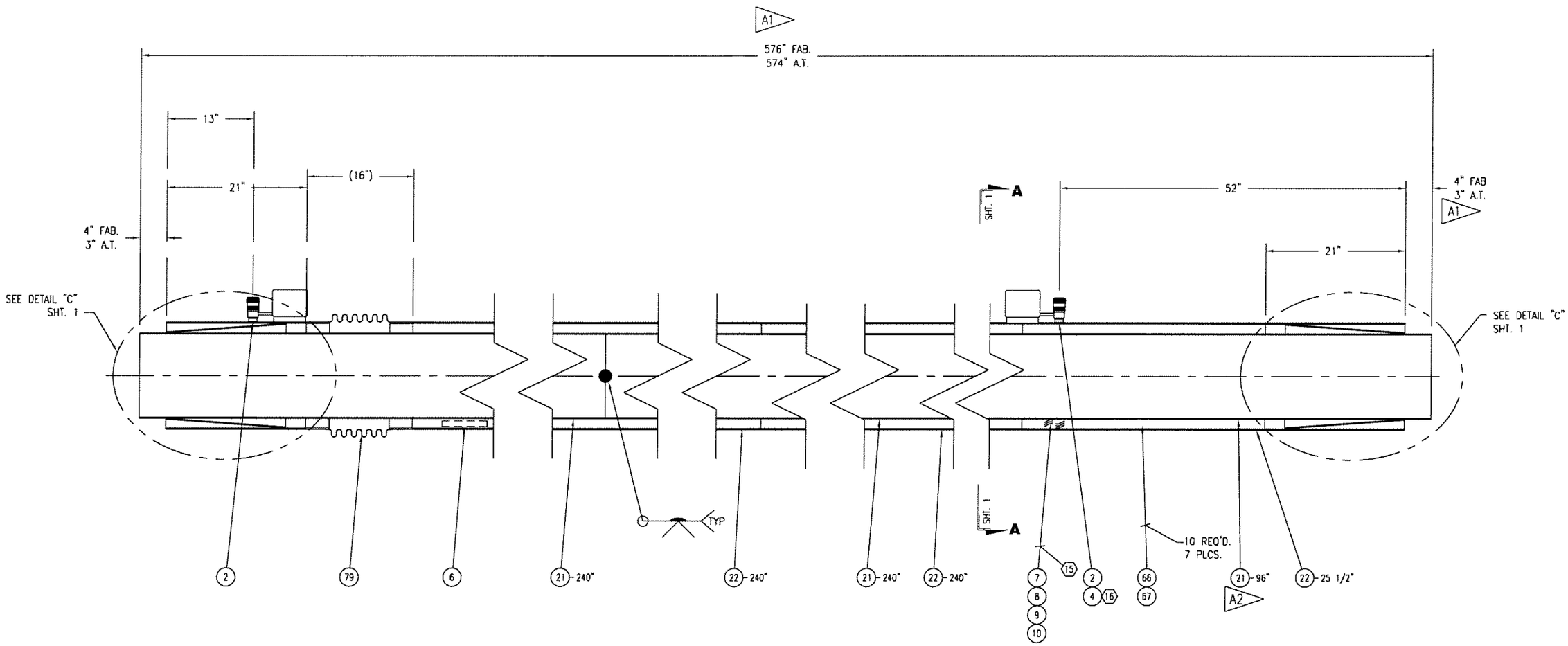

TEST STAND

GFE
DRAWING NOT FOR CONSTRUCTION

-- PHPK TECHNOLOGIES PROPRIETARY --
INFORMATION ON THIS DRAWING MAY NOT BE DISCLOSED TO ANY PARTY WITHOUT WRITTEN AUTHORIZATION FROM PHPK

09-2584-5000

WHERE USED

DRAWN BY	KDH	TOLERANCES	
CHECKED	RJM	FRACTION	± 1/8
ENGINEER	RJM	2 PL .XX	± .01
		3 PL .XXX	± .005
REVIEWED	RSB	ANGULAR	± 1/2°
RELEASE DATE	10/26/2009	4233 EDR NO	

DIMENSIONS ARE IN INCHES AND PROVIDED PRIOR TO SURFACE TREATMENTS, UNLESS NOTED.

PHPK TECHNOLOGIES
2111 BUILDERS PLACE
COLUMBUS, OH 43204
614-486-4750 WWW.PHPK.COM

TITLE
STENNIS SPACE CENTER, A-2 TEST STAND
12" X 16" NPS, V.J. LH2 TRANSFER PIPING

SIZE	DRAWING NUMBER	CHG
B	09-2584-5037	A

EST WEIGHT | DWG | SHEET 2 OF 3

REVISIONS

REV	DATE	DWN	CHK'D	ENGR	RVW'D	EDR	DESCRIPTION
A	03/08/2010	KDH	RJM	RJM	TLW	4475	1.) REVISED DIM., 2.) REVISED CUT-LENGTH

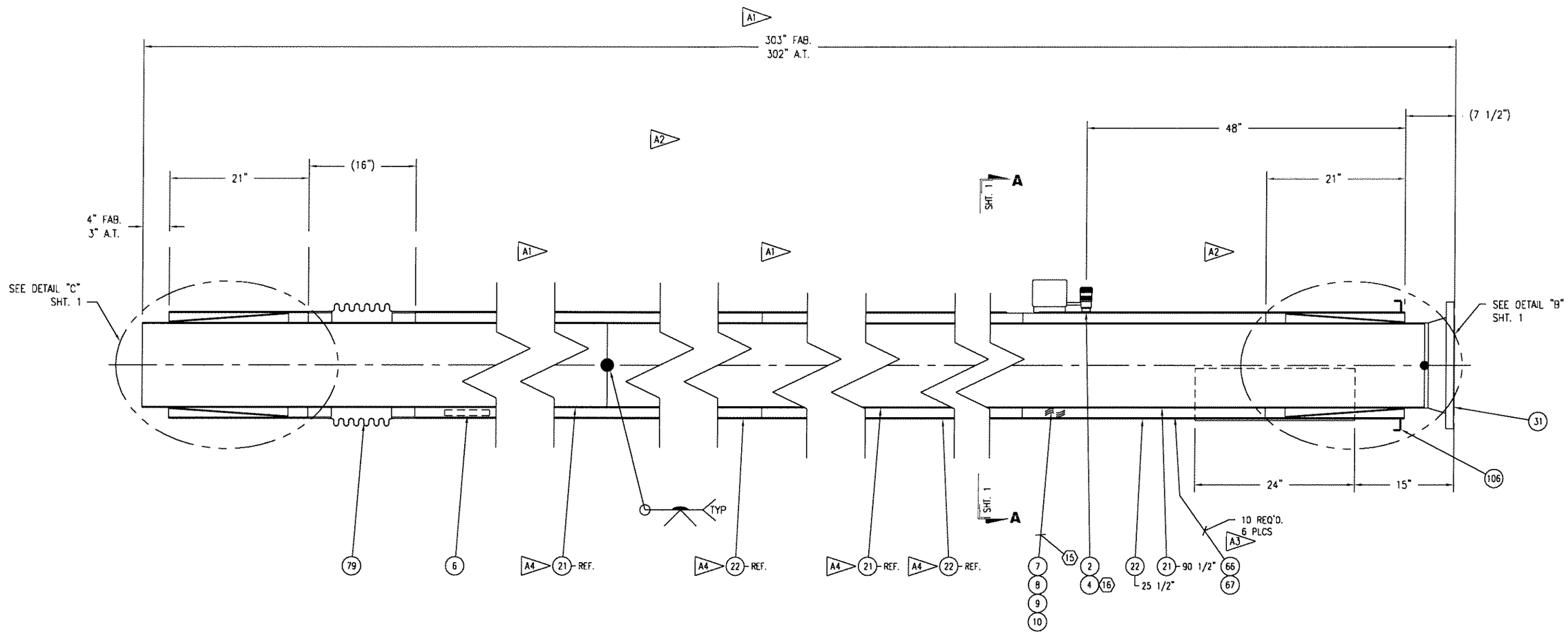

TEST STAND

GFE
DRAWING NOT FOR CONSTRUCTION

REV	DATE	DWN	CHK'D	ENG'R	RV'W'D	EDR	DESCRIPTION
A	02/25/2010	KDH	RJM	RJM	TLW	4449	1) REVISED DIM., 2) ADDED DIM., 3) REVISED QTY., 4) MADE REF.

REVISIONS

09-2584-5000

WHERE USED

DRAWN BY	KDH	TOLERANCES	
CHECKED	RJM	FRACTION	± 1/8
ENGINEER	RJM	2 PL .XX	± .01
		3 PL .XXX	± .005
REVIEWED	RSB	ANGULAR	± 1/2°
RELEASE DATE	10/26/2009	4322 EDR NO	

DIMENSIONS ARE IN INCHES AND PROVIDED PRIOR TO SURFACE TREATMENTS, UNLESS NOTED.

PHPK TECHNOLOGIES
2111 BUILDERS PLACE
COLUMBUS, OH 43204
614-486-4750 WWW.PHPK.COM

TITLE
STENNIS SPACE CENTER, A-2 TEST STAND
12" X 16" NPS, V.J. LH2 TRANSFER PIPING

SIZE B | DRAWING NUMBER 09-2584-5038 | CHG A

EST WEIGHT | DWG | SHEET 2 OF 3

-- PHPK TECHNOLOGIES PROPRIETARY --
INFORMATION ON THIS DRAWING MAY NOT BE DISCLOSED TO ANY PARTY WITHOUT WRITTEN AUTHORIZATION FROM PHPK

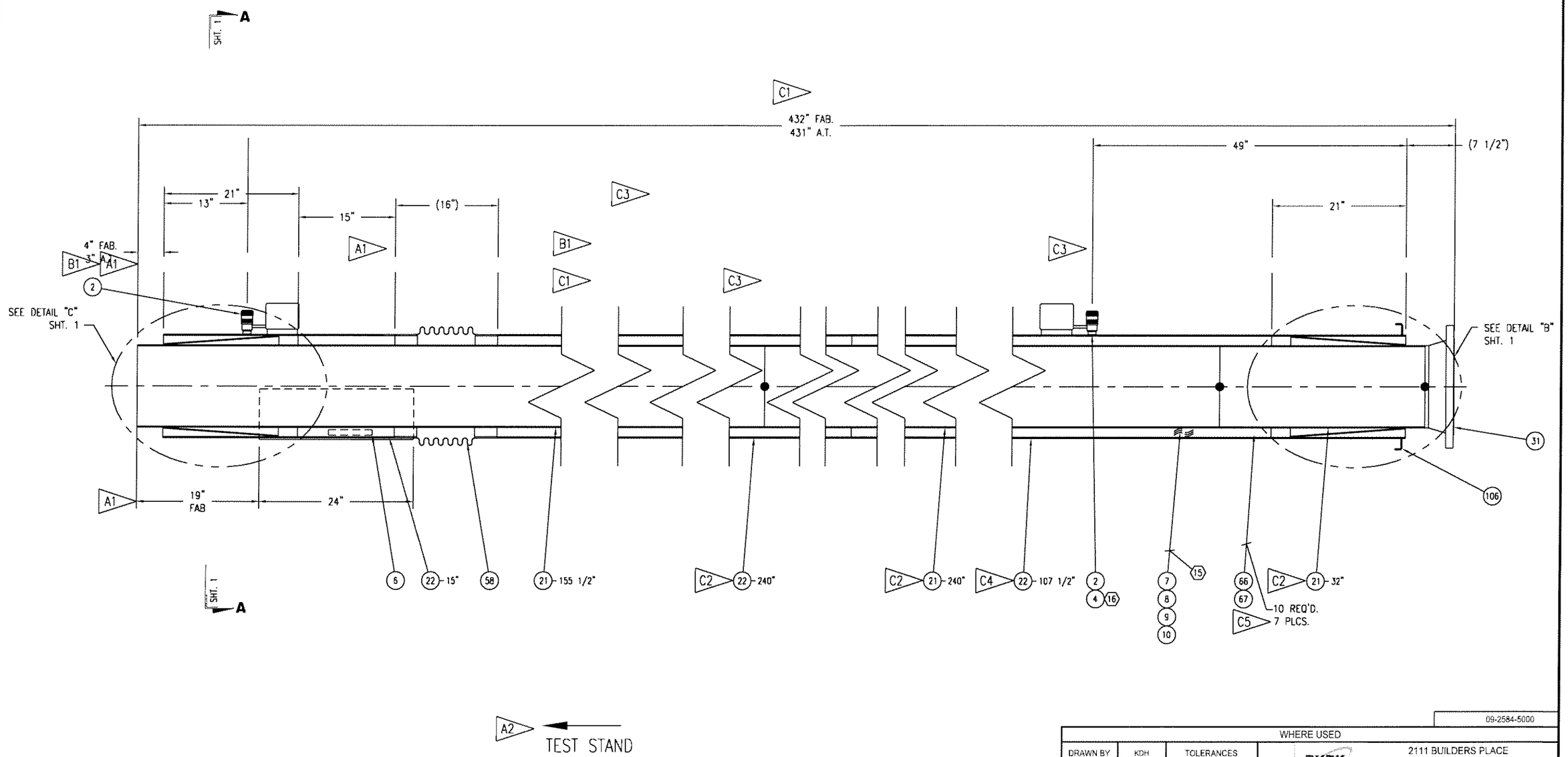

GFE
DRAWING NOT FOR CONSTRUCTION

REVISIONS

REV	DATE	DWN	CHK'D	ENG'R	RVW'D	EDR	DESCRIPTION
A	10/19/2009	KDH	RJM	RJM	TLW		1.) REVISED DIM., 2.) REVISED TEST STAND ARROW
B	10/26/2009	KDH	RJM	RJM	RSB	4322	1.) REVISED DIMENSION
C	02/25/2010	KDH	RJM	RJM	TLW	4449	1) REVISED DIM., 2) ADDED BALLOON & CUT-LENGTH, 3) ADDED DIM., 4) REVISED CUT-LENGTH, 5) REVISED QTY.

09-2584-5000

WHERE USED

DRAWN BY	KDH	TOLERANCES	
CHECKED	RJM	FRACTION	± 1/8
ENGINEER	RJM	2 PL .XX	± .01
		3 PL .XXX	± .005
REVIEWED		ANGULAR	± 1/2°
RELEASE DATE	10/12/2009	EDR NO	

DIMENSIONS ARE IN INCHES AND PROVIDED PRIOR TO SURFACE TREATMENTS, UNLESS NOTED.

PHPK TECHNOLOGIES
2111 BUILDERS PLACE
COLUMBUS, OH 43204
614-486-4750 WWW.PHPK.COM

TITLE
STENNIS SPACE CENTER, A-2 TEST STAND
12" X 16" NPS, V.J. LH2 TRANSFER PIPING

SIZE B | DRAWING NUMBER 09-2584-5039 | CHG C

EST WEIGHT | DWG | SHEET 2 OF 3

-- PHPK TECHNOLOGIES PROPRIETARY --
INFORMATION ON THIS DRAWING MAY NOT BE DISCLOSED TO ANY PARTY WITHOUT WRITTEN AUTHORIZATION FROM PHPK

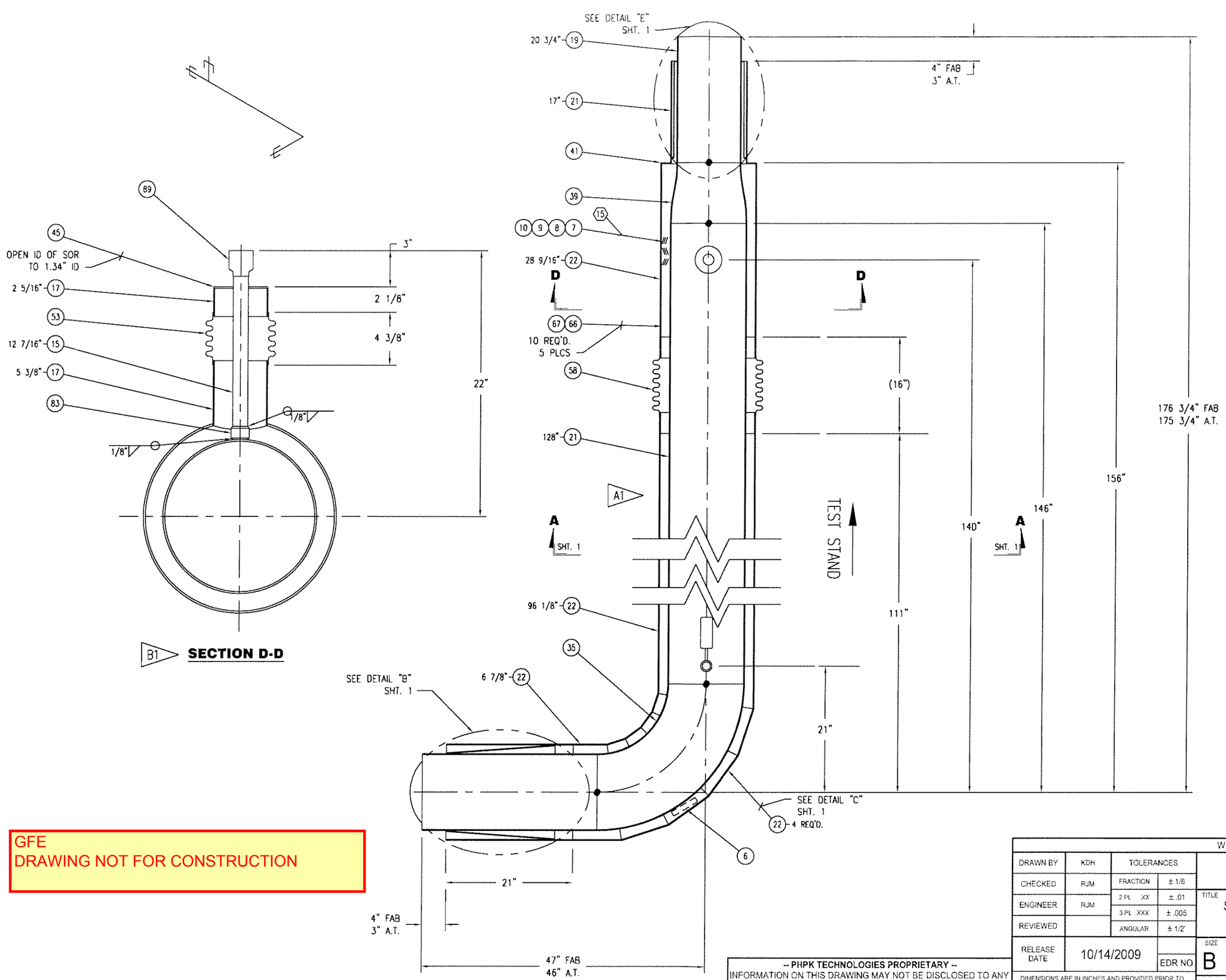

GFE
DRAWING NOT FOR CONSTRUCTION

REVISIONS

REV	DATE	DWN	CHK'D	ENGR	RVW'D	EDR	DESCRIPTION
A	10/26/2009	KDH	RJM	RJM	RSB	4233	1.) REMOVED DOUBLER AND DIMENSIONS
B	02/12/2010	KDH	RJM	RJM	TLW	4418	1) REVISED SECTION D-D

09-2584-5000

WHERE USED

DRAWN BY	KDH	TOLERANCES	
CHECKED	RJM	FRACTION	± 1/8
ENGINEER	RJM	2 PL .XX	± .01
		3 PL .XXX	± .005
REVIEWED		ANGULAR	± 1/2°
RELEASE DATE	10/14/2009	EDR NO	

DIMENSIONS ARE IN INCHES AND PROVIDED PRIOR TO SURFACE TREATMENTS, UNLESS NOTED.

PHPK TECHNOLOGIES
2111 BUILDERS PLACE
COLUMBUS, OH 43204
614-486-4750 WWW.PHPK.COM

TITLE
STENNIS SPACE CENTER, A-2 TEST STAND
12" X 16" NPS, V.J. LH2 TRANSFER PIPING

SIZE	DRAWING NUMBER	CHG
B	09-2584-5040	B

EST WEIGHT | DWG | SHEET 2 OF 3

-- PHPK TECHNOLOGIES PROPRIETARY --
INFORMATION ON THIS DRAWING MAY NOT BE DISCLOSED TO ANY PARTY WITHOUT WRITTEN AUTHORIZATION FROM PHPK

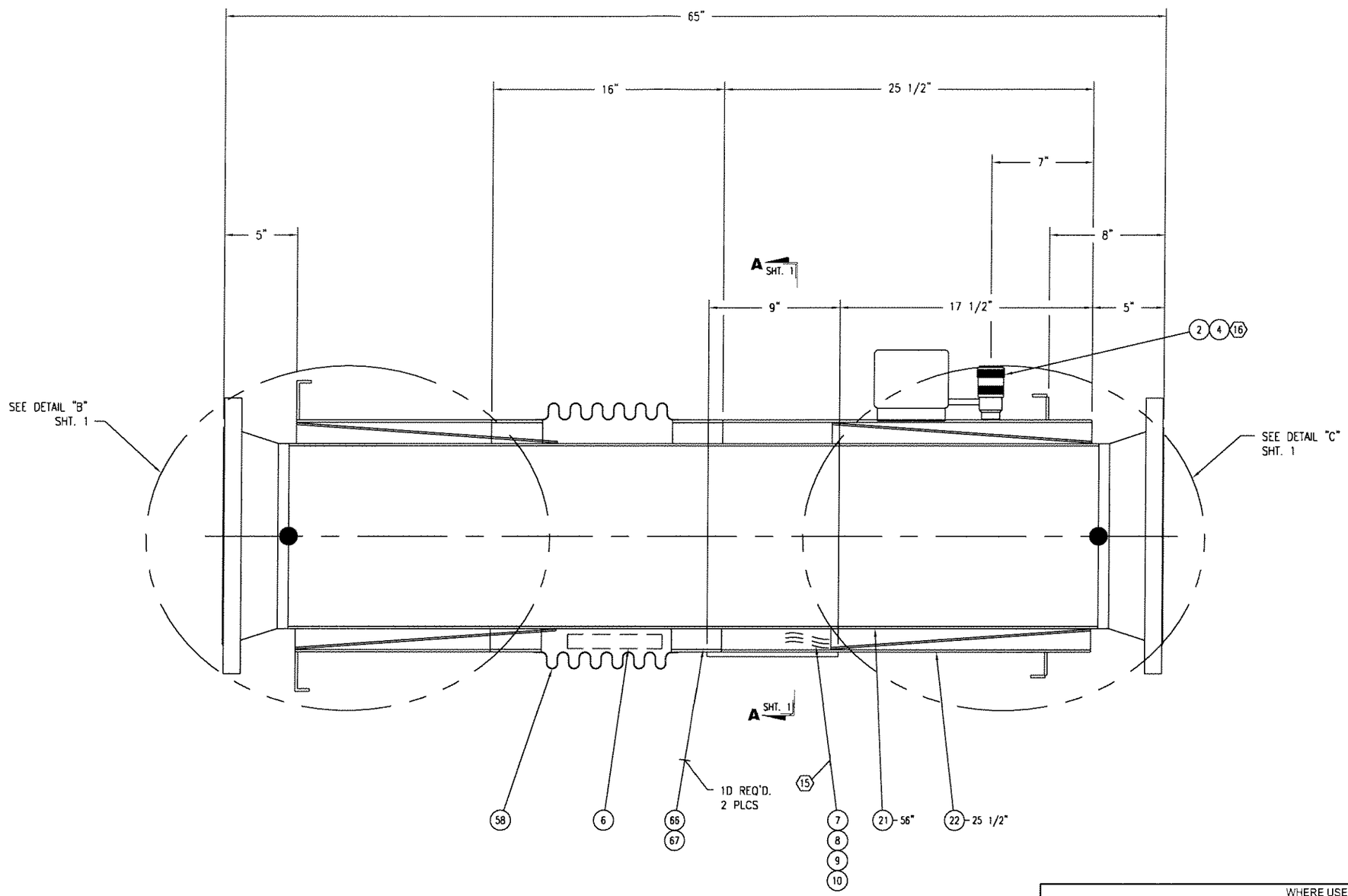

GFE
DRAWING NOT FOR CONSTRUCTION

TEST STAND

-- PHPK TECHNOLOGIES PROPRIETARY --
INFORMATION ON THIS DRAWING MAY NOT BE DISCLOSED TO ANY PARTY WITHOUT WRITTEN AUTHORIZATION FROM PHPK

09-2584-5000

WHERE USED

DRAWN BY	KDH	TOLERANCES		PHPK TECHNOLOGIES 2111 BUILDERS PLACE COLUMBUS, OH 43204 614-486-4750 WWW.PHPK.COM
CHECKED	RJM	FRACTION	± 1/8	
ENGINEER	RJM	2 PL .XX	± .01	TITLE STENNIS SPACE CENTER, A-2 TEST STAND 12" X 16" NPS, V.J. LH2 TRANSFER PIPING
		3 PL .XXX	± .005	
REVIEWED	TLW	ANGULAR	± 1/2°	
RELEASE DATE	03/08/2010	4475		SIZE B / DRAWING NUMBER 09-2584-5041 / CHG N/C
		EDR NO		
DIMENSIONS ARE IN INCHES AND PROVIDED PRIOR TO SURFACE TREATMENTS, UNLESS NOTED.				EST WEIGHT / DWG / SHEET 2 OF 3

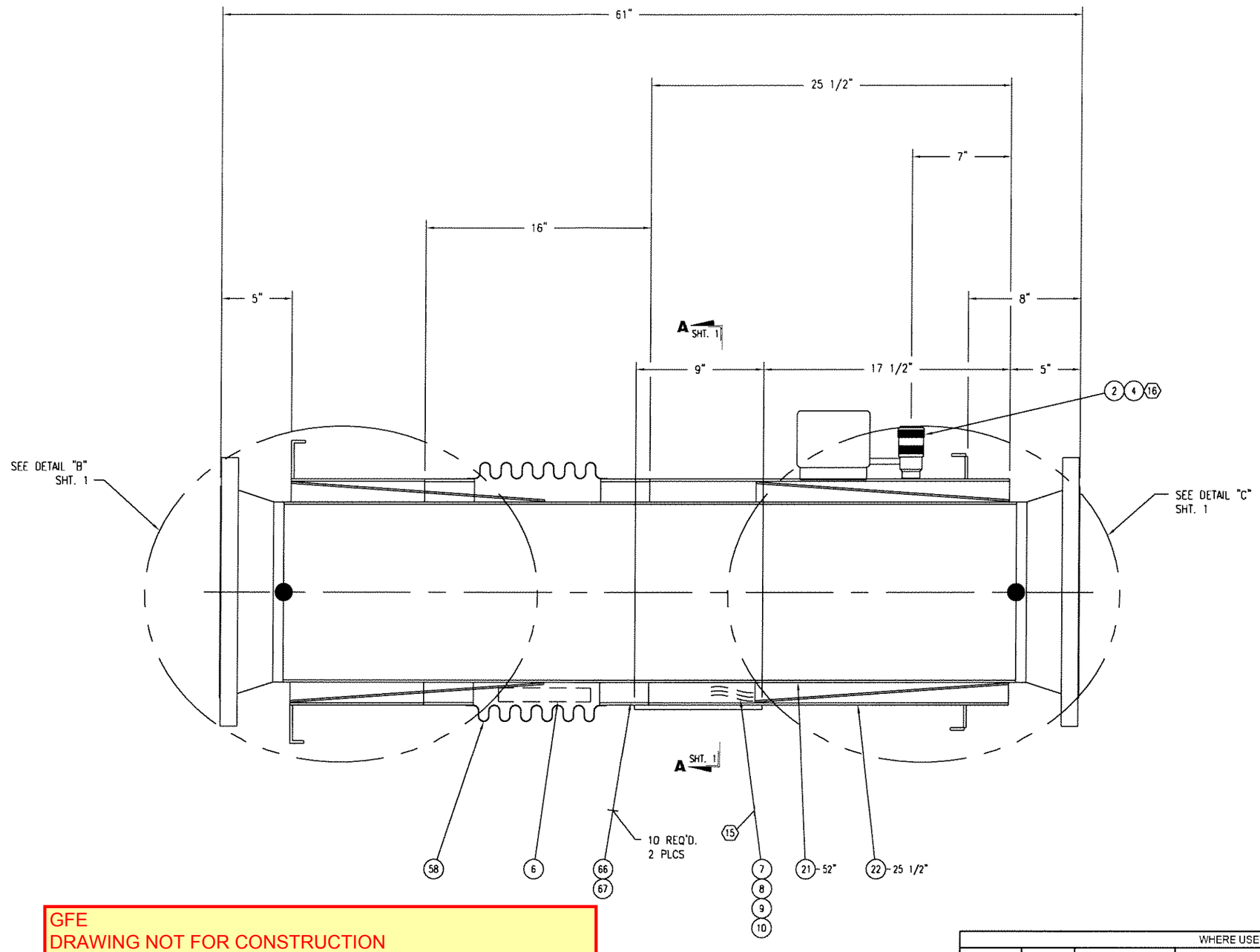

GFE
DRAWING NOT FOR CONSTRUCTION

TEST STAND

09-2584-5000

WHERE USED

DRAWN BY	KDH	TOLERANCES	
CHECKED	RJM	FRACTION	± 1/8
ENGINEER	RJM	2 PL .XX	± .01
		3 PL .XXX	± .005
REVIEWED	TLW	ANGULAR	± 1/2°
RELEASE DATE	03/08/2010	4475	
		EDR NO	

PHPK TECHNOLOGIES
2111 BUILDERS PLACE
COLUMBUS, OH 43204
614-486-4750 WWW.PHPK.COM

TITLE
STENNIS SPACE CENTER, A-2 TEST STAND
12" X 16" NPS, V.J. LH2 TRANSFER PIPING

SIZE	DRAWING NUMBER	CHG
B	09-2584-5042	N/C

EST WEIGHT | DWG | SHEET 2 OF 3

DIMENSIONS ARE IN INCHES AND PROVIDED PRIOR TO SURFACE TREATMENTS, UNLESS NOTED.

-- PHPK TECHNOLOGIES PROPRIETARY --
INFORMATION ON THIS DRAWING MAY NOT BE DISCLOSED TO ANY PARTY WITHOUT WRITTEN AUTHORIZATION FROM PHPK