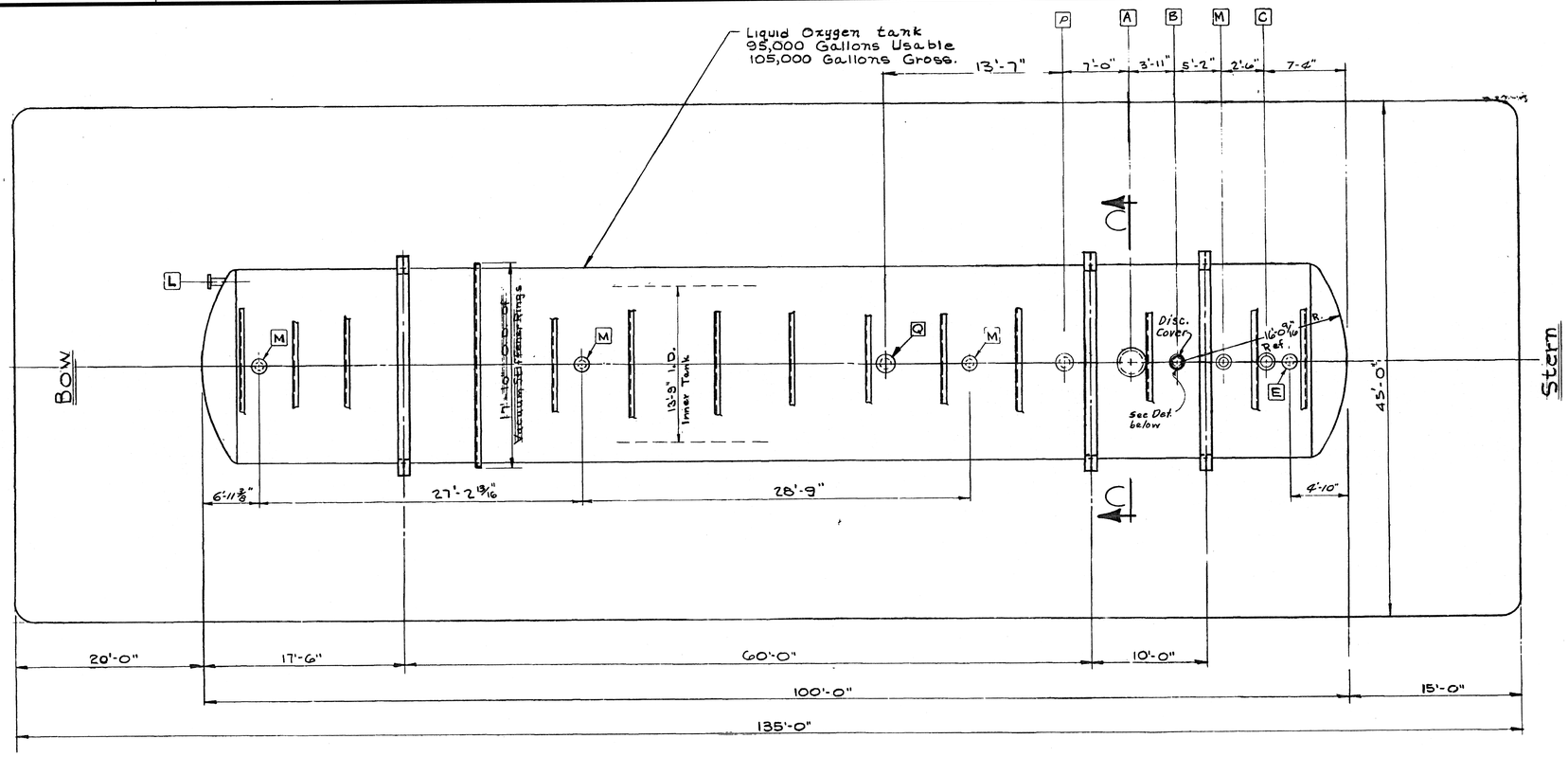

Plan View

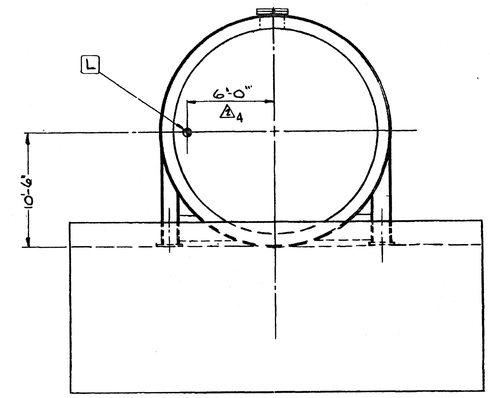

View B-B

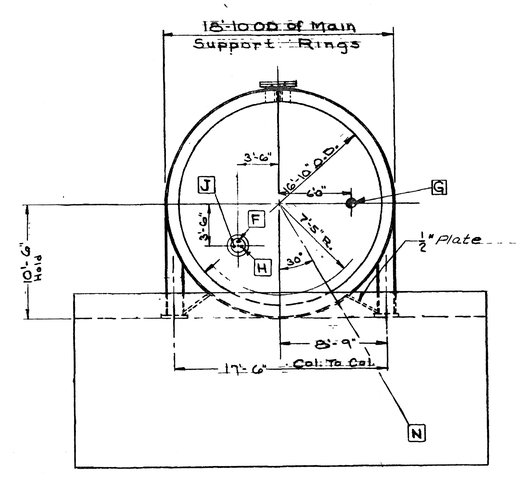

View A-A

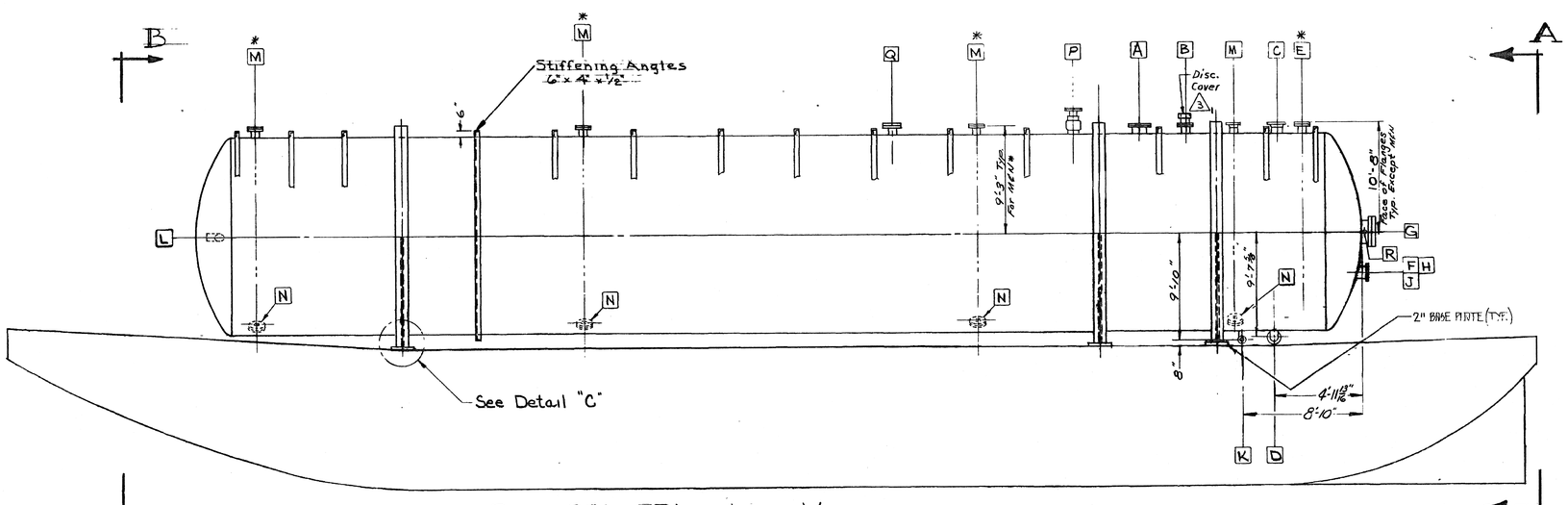

Port Side Elevation View

Letter	Size	Type	Service
Q	4"	Flanged	Cleaning Inlet
P	6"	150# ASA RF. Flg.	LE 602
N	5"	Flanged	Perlite Drain
M	5"	Flanged	Perlite Fill
L	2"	150# ASA RF. Flg.	Vacuum Connection
K	2"	300# ASA RF. Flg.	Vaporizer Feed.
J	1/2"	Sch. 160 B.W. Conn.	Lower Liquid Level
H	1/2"	Sch. 160 B.W. Conn.	Vacuum Gauge Connection
G	8"	150# ASA R.F. Flg.	Vacuum Pump Connection
F	1/2"	Sch. 160 B.W. Conn.	Upper Liquid Level
E	6"	150# ASA R.F. Flg.	Vaporizer Return
D	8"	150# ASA R.F. Flg.	Liquid Oxygen Fill & Drain
C	8"	150# ASA R.F. Flg.	Vent
B	8"	—	Rupture Disc Connection.
A	18"	—	Manway
K	1/2"	FNPT	PRESSURE TAP

Nozzle Identification

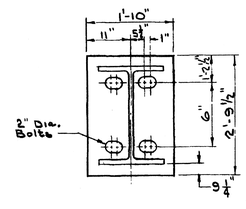

Detail "C"
Typical For Sliding Support
Fixed End Identical Except For Holes.

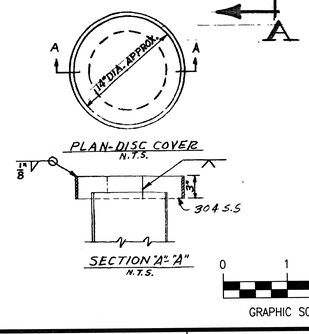

NOTES:

1. TYP. FOR LOX BARGE NO. 2 ONLY.

ISSUED/CER NOV 25 2005

SYM	ZONE	DESCRIPTION	DATE	APPROVED
OA		ADMIN CHANGE TO MAKE FORMAT COMPATIBLE WITH WINDCHILL. UPDATED FROM ORIGINAL. FOR SIGNATURES SEE HISTORY. TDB. 11/17/05 T.m.m. 11/17/05	11/17/05	

REVISIONS

SIGNATURES		DATE
DRAWN		
CHECKED		
ENGINEER		
ISSUED	ISSUED/CER	11/5/69
CONCURRENCE		
SUBMITTED		
SAFETY		
APPROVED		DATE
USED ON	31B00-D001	

NATIONAL AERONAUTICS AND SPACE ADMINISTRATION
JOHN C. STENNIS SPACE CENTER SSC, MS 39529-6000
MSS Mississippi Space Services

PROPELLANT BARGES
LOX BARGE MOUNTED VESSEL
GENERAL ARRANGEMENT

SIZE F | DWG NO. 31B00-M001 | REV OA

AUTHORITY | SHEET

REF NO 0-M1

CADD CONTROLLED DRAWING
CADD P/N: 31B00-M001sht1r0A

GRAPHIC SCALE IN INCHES 0 1 2 3

REF: MTF-805