DRAWING LIST

DRAWING SUBNET NO.		DRAWING NO.	DESCRIPTION	QTY/ ASSY
00172989			INLET CONE ROLLING SUPPORT ASSEMBLY	1
00172989		001	FRAME — CART	1
00172989		002	SHIM — CASTER	4
00172989		003	BEARING PLATE — L.H.	1
00172989		004	BEARING PLATE — R.H.	1
00172989		005	OFHC COPPER FIN. MAKE FROM: McMASTER-CARR PART NUMBER 89675K14	2
00172989		006	BALL STUD ADJUSTMENT PLATE — L.H.	1

INCH FASTENERS TORQUE VALUES (Nm-LBS)	
NO	EFFECTIVE TORQUE
3	650
4	650
5	55
6	1000

COMMERCIAL PARTS LIST

BALLOON NO.	DESCRIPTION	QTY/ ASSY
1	CASTOR, RIGIDS, 3000 LB. CAPACITY, 4-1/2" DIA. SOLID WHEEL McMASTER-CARR PART No. 8OVG10501R	4
2	BALL TRANSFER — STUD MOUNT 2" DIA. BALL, 1-000-12UNF X 2" LG. STUD McMASTER-CARR PART No. 6496S5 440LB. LOAD CAPACITY	2
3	HEX HEAD CAP SCREW, 500-13 UNC-2A X 2.00 LG. MATERIAL: ZINC PLATED STEEL, GRADE 8 McMASTER-CARR PART NUMBER 91257A720	16
4	HEX HEAD CAP SCREW, 500-13 UNC-2A X 3.00 LG. MATERIAL: ZINC PLATED STEEL, GRADE 8 McMASTER-CARR PART NUMBER 91257A754	4
5	SOC LOW HEAD CAP SCREW, 375-16 UNC-3A X.75 LG MATERIAL: 18-8 STAINLESS STEEL McMASTER-CARR PART NUMBER 93615A515	4
6	HEX THIN JAM NUT 1.000-12 UNF-2B McMASTER-CARR PART No. 93833A655 MATERIAL: ZINC PLATED PLAIN STEEL GRADE B	2
7	SET SCREW, .375-16 UNC-3A X .625 LG. MATERIAL: 18-8 STAINLESS STEEL McMASTER-CARR PART NUMBER 92779A135	4
8	WASHER, .531 ID, 1.063 OD, .097-.121 THICK MATERIAL: ZINC PLATED, HIGH STRENGTH STEEL McMASTER-CARR PART NUMBER 98023A533	20

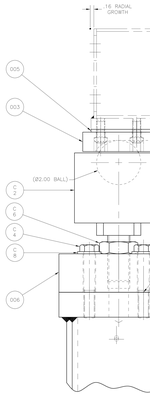

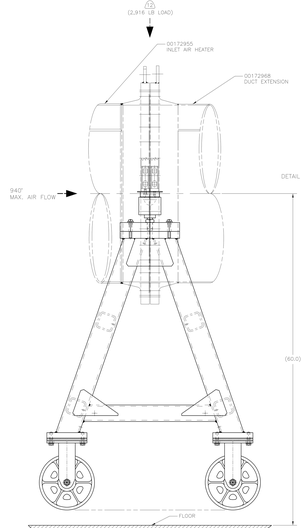

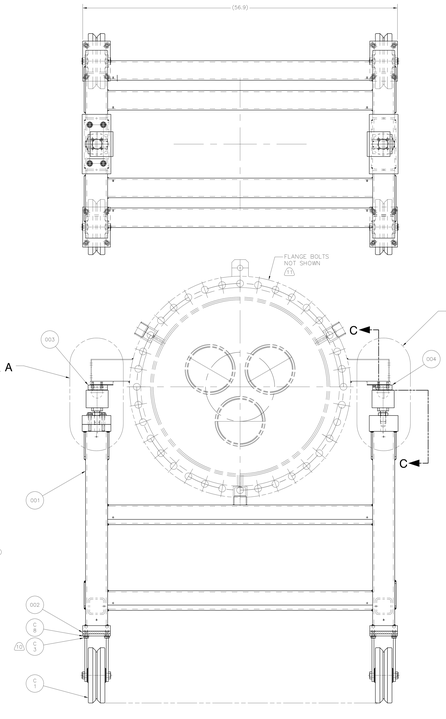

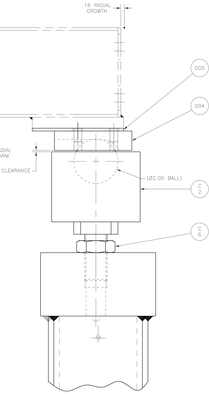

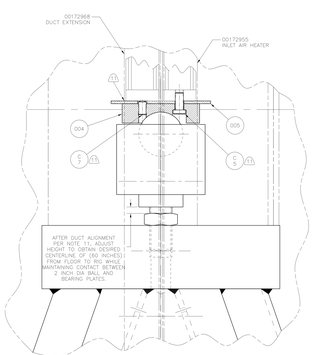

8. DO NOT USE AN IMPACT WRENCH TO TIGHTEN FASTENERS.

10. APPLY LOCTITE THREAD LOCKER 242 OR 243 TO THREADS C-3.

11. BEFORE TIGHTENING FLANGE BOLTS, ALIGN DUCT EXTENSION WITH ADJACENT RADIAL ARMS. INSTALL COOLING FIN AND BEARING PLATES. BOLT BEARING PLATE TO COMBUSTOR PART 4 RADIAL ARM, USING 2 EACH SET SCREW, PART 7-, UNTIL BOTH ARE DRY. THEN GENTLY TIGHTEN 2 EACH SET SCREW, PART 7-, UNTIL BOTH JUST MAKE CONTACT WITH THE DUCT EXTENSION RADIAL ARM. REPEAT ON THE OTHER SIDE. TIGHTEN FLANGE BOLTS CAREFULLY, SO AS NOT TO DISTURB ALIGNMENT.

12. THIS ASSEMBLY WAS DESIGNED TO SUPPORT THE 1,020 LB WEIGHT OF THE INLET CONE PART 1 OF 853536 AND PART 2 OF 853537 PLUS THE 700 LB WEIGHT OF THE DUCT EXTENSION, DRAWING 00172968. FOR A TOTAL OF 1,720 LB. HOWEVER, THE LOAD WAS ACTUALLY DETERMINED BY ASRC ENGINEERING SHOWED AN MAXIMUM DOWNWARD FORCE OF 2,916 LB. WHICH WAS USED TO DESIGN THIS SUPPORT. THE BALL TRANSFER PART 2 ALLOWS THE DUCT EXTENSION RADIAL THERMAL GROWTH, BUT DOES NOT ALLOW AXIAL THERMAL GROWTH. THE AXIAL THERMAL GROWTH RESULTS IN FOUR CASTERS, PART C-1, ROLLING UPSTREAM ON TWO TRACKS (NOT SHOWN) ON THE BEARING PLATES. TO INTERCEPT HEAT FROM THE RADIAL ARMS AND PREVENT IT FROM OVER HEATING THE BEARING PLATES.

13. QUANTITY: ONE

1. FOR ADDITIONAL INFORMATION, SEE SHEET 02.

2. MATERIAL: UNLESS NOTED, STEEL BAR AND PLATE SHALL BE PER ASTM A-36, HAVING A MINIMUM YIELD STRENGTH OF 36 KSI AND STEEL TUBING SHALL BE PER ASTM A-500, GRADE B, HAVING A MINIMUM YIELD STRENGTH OF 46 KSI. PROVIDE A LEGIBLE COPY OF THE MATERIAL CERT WITH ENGLISH UNITS AND THIS DRAWING NUMBER ADDED.

3. 125 Ra ALL MACHINED SURFACES.

4. MACHINE A .12-.18 DIAMETER HOLE IN ALL ENCLOSED TUBING BEFORE WELDING IN APPROXIMATE AREA SHOWN.

5. WELDERS SHALL BE CERTIFIED TO HAVE BEEN QUALIFIED BY TESTS IN ACCORDANCE WITH AWS D1.1 OR EQUAL. WELDING PROCEDURE SHALL BE QUALIFICATION TEST. WELDING PROCEDURES SHALL BE IN ACCORDANCE WITH AWS D1.1 FOR CARBON STEEL.

6. ALL WELDS SHALL BE 100% VISUALLY INSPECTED PER AWS D1.1 OR EQUAL. NO CRACKS ARE ALLOWED.

7. PAINTING: ALL SURFACES EXCEPT AS NOTED SHALL BE DRY AND FREE FROM DIRT, OIL GREASE, WAX AND OTHER CONTAMINANTS. OXIDE OR CORROSION SHALL BE REMOVED BY HAND OR POWER TOOLS. ONE COAT OF A RUST INHIBITOR PRIMER, DEVOE DEVGUARD 4020 OR EQUAL, SHALL BE APPLIED TO ALL SURFACES NOT SPECIFIED. DO NOT PAINT DESIGNATED SURFACES. TWO COATS OF A WATER-BASE ACRYLIC EPOXY DEVOE DEVGUARD 4418/4418-8999 OR EQUAL, SHALL BE APPLIED TO ALL PRIMED SURFACES. COLOR GRAY 26493, PER FEDERAL STANDARDS NUMBER 595B. PAINTS SHALL BE APPLIED IN ACCORDANCE WITH MANUFACTURER'S INSTRUCTIONS. EACH COAT SHALL BE FREE FROM EVIDENCE OF POOR APPLICATION. VARIATIONS IN COLOR, GLOSS, OR TEXTURE SHALL NOT BE ACCEPTED.

8. WEIGH THE FINISHED PART AND METAL STAMP THE ACTUAL WEIGHT AND DRAWING NUMBER, 00172989, USING ⅛ INCH HIGH CHARACTERS ON SPECIFIED SURFACE, PER SAE 4547B, METHOD 2A2(IN C14) ON SHEET 02.

CONTROLLED DRAWING
AEROPROPULSION SYSTEMS
THIS DRAWING IS CONTROLLED BY AEROPROPULSION SYSTEMS. ANY CHANGES TO THIS DOCUMENT MUST BE APPROVED BY AEROPROPULSION SYSTEMS PRIOR TO ACCEPTANCE OR PRODUCTION.

CHG	NUM	DESCRIPTION	APP DATE
		REVISIONS	

LAST CHANGED	REV LTR	PC CTL NO.	REV DATE
LEON HUBBARD	L. HUBBARD	L. HUBBARD	L. HUBBARD

CAD DRAWING - DO NOT REVISE MANUALLY

CONTROL	UNLESS OTHERWISE SPECIFIED DIMENSIONS ARE IN INCHES TOLERANCE: LINEAR ±.010 ANGULAR ±0.5°

FD
FABRI-DYNE CORPORATION

BLDG 0023 E58 WEST WING
CELL W6 SINGLE SPOOL TURBINE FACILITY

INLET AIR HEATER WELDMENT / DUCT EXTENSION SUPPORT

SIZE: B	SCALE/SHT: 1/1	PROJECT #: CR 0023	DRAWING TYP NO: - M- 501
CAD:		DATE:	

DRAWN: LEON HUBBARD	DATE:	TOL:	
CHECKED:			
ENGINEERING:			
MFG:			
QA:			

SIZE: B	SCALE/SHT: 1/1	PROJECT #: CR 0023	DRAWING TYP NO: - M- 501
REV. CODE:			SHT: 01 OF 02
PRTS. TYP/SIZE:		SOFTWARE: AUTOCAD 2008	REVISION: -
DIMS.: CLASS NOTED		OPTIONAL DIMS.: YES/NO	

0/02	SINGLE PART DRAWING		
000	CHARTED PART DRAWING		
1	COMMERCIAL PART		
2	EXISTING PART		

This drawing is the property of FABRI-DYNE CORPORATION. It is loaned for mutual consideration and shall not be reproduced or copied or used for any purpose other than that for which it is loaned.