PROJECT SITE

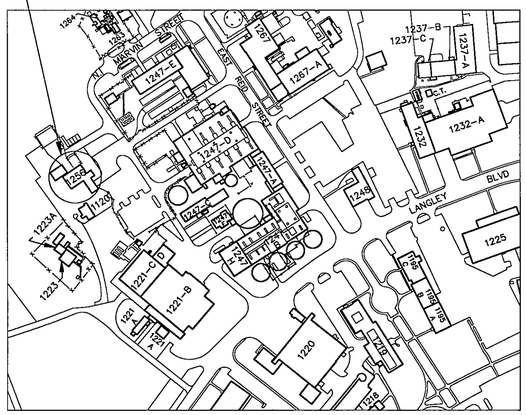

LOCATION MAP

NOT TO SCALE

NORTH

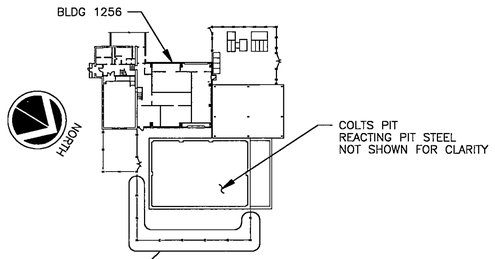

PROVIDE TEMPORARY FENCING DURING CONSTRUCTION TO PREVENT ACCESS TO OPEN PIT

KEYPLAN

NOT TO SCALE

LANGLEY RESEARCH CENTER

FABRICATION AND ERECTION OF COMBINED LOADS TEST SYSTEM (COLTS) TEST CHAMBER ENCLOSURE BUILDING 1256

DRAWING INDEX

SHEET NUMBER	TITLE	DRAWING NUMBER
STRUCTURAL		
S1	TITLE SHEET	260427
S2	FLOOR PLAN	260428
S3	UNLOADED ENDWALL ELEVATION AND GENERAL NOTES	260429
S4	LOADED SIDEWALL ELEVATION	260430
S5	UNLOADED SIDEWALL ELEVATION	260431
S6	LOADED ENDWALL ELEVATION	260432
S7	ROOF PLAN	260433
S8	REMOVABLE ROOF PANELS	260434
S9	ROOF DETAILS	260435
S10	SECTIONS AND DETAILS, SHEET 1	260436
S11	SECTIONS AND DETAILS, SHEET 2	260437
S12	FLOOR GRATING AND CONNECTIONS	260438
S13	STAIR PLAN AND SECTIONS	260439
S14	STAIR DETAILS	260440
S15	PIT SEAL INSTALLATION	260441
S16	PIT SEAL DETAILS	260442
S17	SECTIONS AND DETAILS, SHEET 3	260443
S18	SCREENED WALL	260444
S19	ROOF EXTENSION DETAILS	260445
ELECTRICAL		
E1	PIT AREA LIGHTING PLAN	760528
E2	PIT AREA POWER PLAN	760529
E3	PIT AREA TELEPHONE PLAN	760530
E4	LIGHT FIXTURE AND PANELBOARD SCHEDULES	760531
REFERENCE		
S1	FOUNDATION PLAN	260421 REV B
S2	PILE PLAN	260422 REV A
S3	ANCHOR BOLT LOCATION PLAN/DETAILS	260423 REV B
S4	PIT TYPICAL WALL SECTIONS	260424 REV A
S5	FOUNDATION SECTIONS/DETAILS	260425 REV A
S6	PIT / PILE DETAILS	260426

ABBREVIATIONS

AB	ANCHOR BOLT(S)	HM	HOLLOW METAL
AFF	ABOVE FINISHED FLOOR	ID	INNER DIAMETER
APPROX	APPROXIMATE	INSUL	INSULATION
ARCH	ARCHITECTURAL	JT	JOINT
BG	BACK GOUGE	K	KIPS
BLDG	BUILDING	KSI	KIPS PER SQUARE INCH
CCW	COUNTER CLOCK WISE	LG	LONG
CJ	CONTROL JOINT	LH	LEFT HAND
CJP	COMPLETE JOINT PENETRATION	MATL	MATERIAL
CL	CENTERLINE	MAX	MAXIMUM
CLR	CLEAR	MET	METAL
COL	COLUMN	MIN	MINIMUM
CONC	CONCRETE	NOM	NOMINAL
CONT	CONTINUOUS	NO.	NUMBER
DET	DETAIL	OC	ON CENTER
DIA	DIAMETER	OD	OUTER DIAMETER
DWG	DRAWING	OPP	OPPOSITE
EA	EACH	PL	PLATE
EC	EDGE OF CONCRETE	PP	PRESSURE PLATE
EL	ELEVATION	PSF	POUNDS PER SQUARE FOOT
E,ELEC	ELECTRIC(AL)	PSI	POUNDS PER SQUARE INCH
EMB	EMBEDMENT	R	RISER, OR RADIUS
EQ	EQUAL	REQD	REQUIRED
EQUIP	EQUIPMENT	RH	RIGHT HAND
EXP	EXPANSION	RM	ROOM
EXST,EXIST	EXISTING	SCH	SCHEDULE
FF	FINISH FLOOR	SHT	SHEET
FIN	FINISH	SIM	SIMILAR
FL	FLOOR	SJ	STEEL JOIST
FLG	FLANGE	SM	SHEET METAL
FT	FEET	STRUCT	STRUCTURAL
FTG	FOOTING	T	TREAD
GALV	GALVANIZED	THK	THICK
GFE	GOVERNMENT FURNISHED EQUIPMENT	TOS	TOP OF STEEL
GOVT	GOVERNMENT	TYP	TYPICAL
GR	GRADE	UON	UNLESS OTHERWISE NOTED
GWB	GYPSUM WALL BOARD		

STRUCTURAL MATERIALS AND SYMBOLS LEGEND

MATERIALS

- CONCRETE
- STRUCTURAL STEEL (LARGE SCALE)
- NEW
- EXISTING
- HIDDEN (OR BEYOND)
- [X'-X"] REFERENCE DIMENSION ± (FIELD VERIFY)

SYMBOLS

SECTION LETTER OR DETAIL NUMBER

SHEET TAKEN FROM — SHEET SHOWN ON

FILE

JUN 2 1995

REVISIONS							REVISIONS						
DATE	LTR	FREQ	DESCRIPTION	BY	CHECK	APPD	DATE	LTR	FREQ	DESCRIPTION	BY	CHECK	APPD

Sverdrup TECHNOLOGY INC.

LANGLEY DIVISION

WORK ORDER NO. RD08130A92/1118

APPROVALS	DATE
DRAFT. P. MUIR	05/15/95
ENG. E. K. SVENDSEN	05/15/95
CHECK J. F. DOUGHERTY	05/15/95
PROJ. ENG. E. K. SVENDSEN	05/15/95
SUPV'N. D. O'LOUGHLIN	05/15/95

APPROVALS	NAME	ORGANIZATION	DATE		DATE
	J. W. Meyhew	FSED	5/15/95	DRAWN	
				DESIGNED	
				CHECKED	5/15/95
				APPROVED	5/15/95
				TECH. PROJ. ENG.	5/15/95
				RES. PROJ. ENG.	

TOLERANCE ON DIMENSIONS UNLESS SHOWN OTHERWISE — ANGULAR ± X.XX (2 DECIMAL PLACES) ±.02, X.XXX (3 DECIMAL PLACES) ±.005 — SURFACE FINISH IN MICROINCHES RMS UNLESS SHOWN OTHERWISE √

NATIONAL AERONAUTICS & SPACE ADMINISTRATION
LANGLEY RESEARCH CENTER
HAMPTON, VIRGINIA 23681-0001

PROJECT TITLE: COLTS REACTING PIT STEEL

DRAWING TITLE: TITLE SHEET

BUILDING NO. 1256 | SIZE D | DRAWING NO. 260427 | LATEST REV.

SHEET NO. S1

PGV

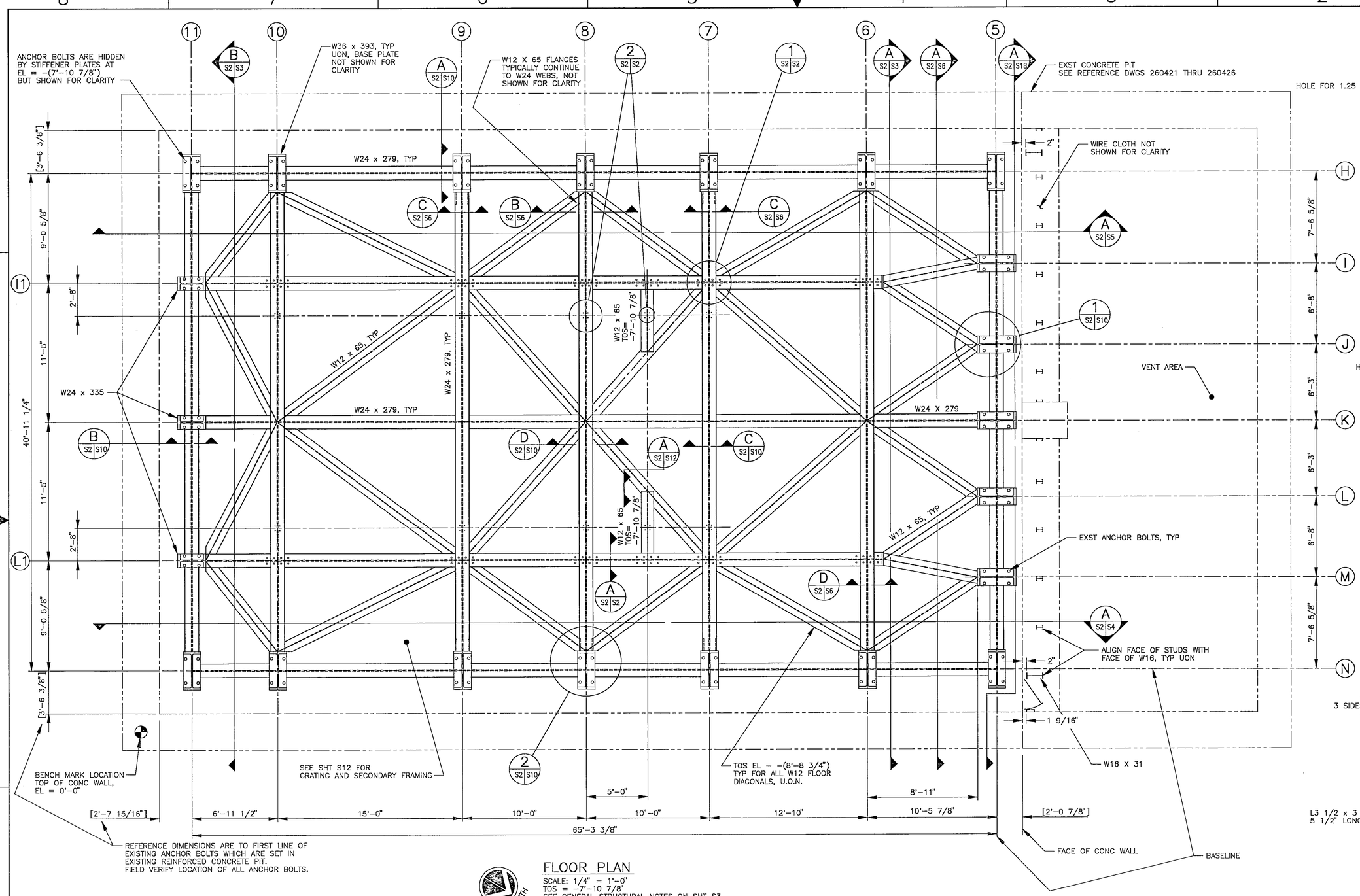

FLOOR PLAN

SCALE: 1/4" = 1'−0"
TOS = −7'−10 7/8"
SEE GENERAL STRUCTURAL NOTES ON SHT S3

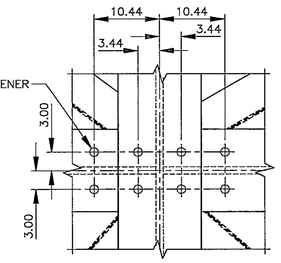

DETAIL 1 (S2/S2)

SCALE: 1" = 1'−0"
TYPICAL 12 PLACES ON FLOOR BEAMS

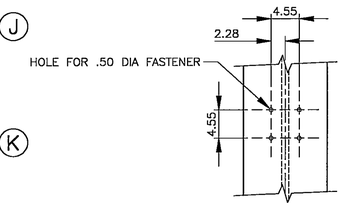

DETAIL 2 (S2/S2)

SCALE: 1" = 1'−0"
TYPICAL 10 PLACES ON FLOOR BEAMS

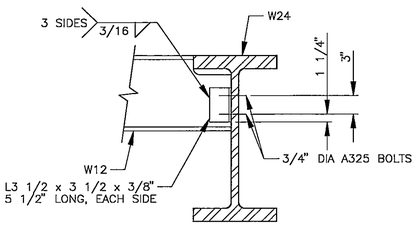

SECTION A (S2/S2)

SCALE: 1" = 1'−0"

FILE
JUN 2 1995

REVISIONS															
DATE	LTR	FREQ	DESCRIPTION	BY	CHECK	APPD	DATE	LTR	FREQ	DESCRIPTION	BY	CHECK	APPD

Sverdrup
TECHNOLOGY INC.
LANGLEY DIVISION

WORK ORDER NO. RD08130A92/1118

APPROVALS	DATE
DRAFT. P. MUIR	05/15/95
ENG. E. K. SVENDSEN	05/15/95
CHECK J. F. DOUGHERTY	05/15/95
PROJ. ENG. E. K. SVENDSEN	05/15/95
SUPV'N. D. O'LOUGHLIN	05/15/95

APPROVALS	NAME	ORGANIZATION	DATE		DATE
		FSED	5/15/95	DRAWN	
				DESIGNED	
				CHECKED	5/15/95
				APPROVED	5/17/95
				TECH. PROJ. ENG.	5/15/95
				RES. PROJ. ENG.	

TOLERANCE ON DIMENSIONS UNLESS SHOWN OTHERWISE — ANGULAR ± X.XX (2 DECIMAL PLACES) ±.02, X.XXX (3 DECIMAL PLACES) ±.005
SURFACE FINISH IN MICROINCHES RMS UNLESS SHOWN OTHERWISE √

FOR DRAWING INDEX, LEGEND AND ABBREVIATIONS, SEE DRAWING 260427

NATIONAL AERONAUTICS & SPACE ADMINISTRATION
LANGLEY RESEARCH CENTER
HAMPTON, VIRGINIA 23681−0001

PROJECT TITLE: COLTS REACTING PIT STEEL

DRAWING TITLE: FLOOR PLAN

BUILDING NO. 1256 | SIZE D | DRAWING NO. 260428 | LATEST REV.

SHEET NO. S2

PBV

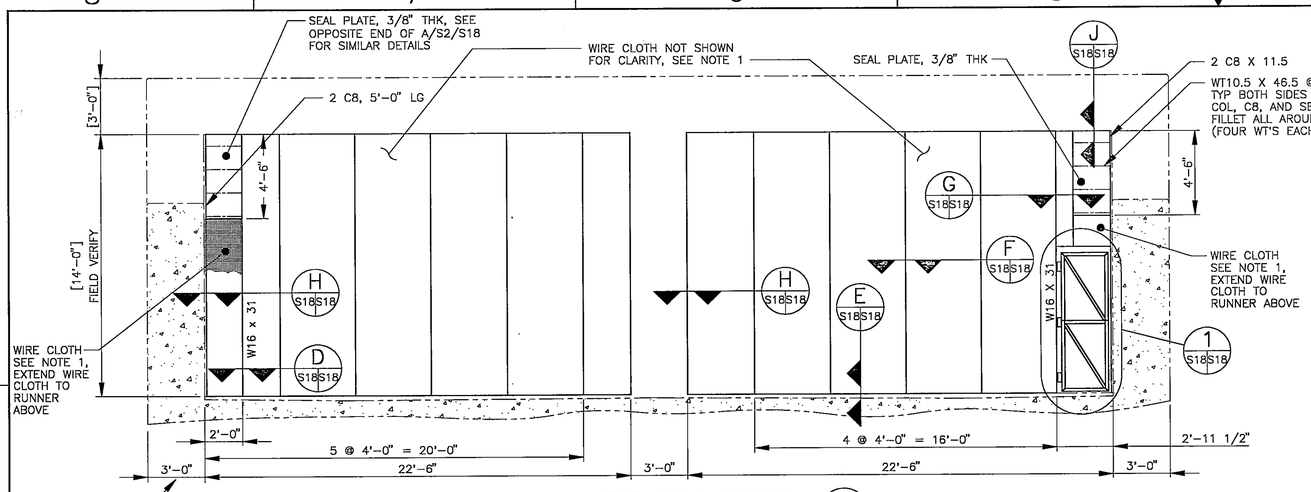

END WALL SECTION A (S2/S18)
SCALE: 1/4"=1'-0"

NOTES:

1. GALVANIZED STEEL WIRE CLOTH SHALL BE 48" WIDE WITH 4 X 4 WIRES PER INCH AND A MINIMUM WIRE DIAMETER OF .035 INCHES.
2. ALL HARDWARE, STEEL STUDS, AND STRUCTURAL STEEL ON THIS SHEET SHALL BE HOT DIP GALVANIZED.

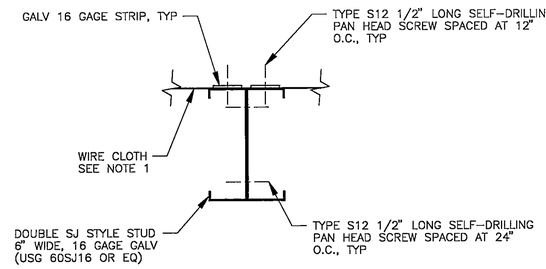

SECTION F (S18/S18)
SCALE: 3" = 1'-0"

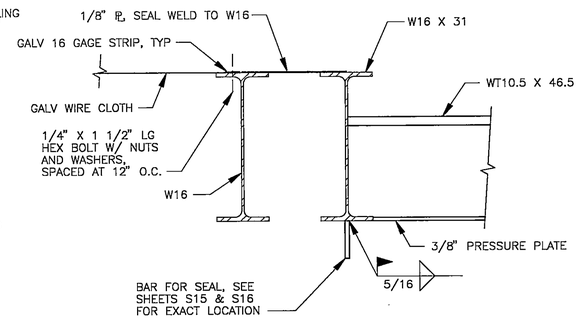

SECTION G (S18/S18)
SCALE: 1 1/2" = 1'-0"

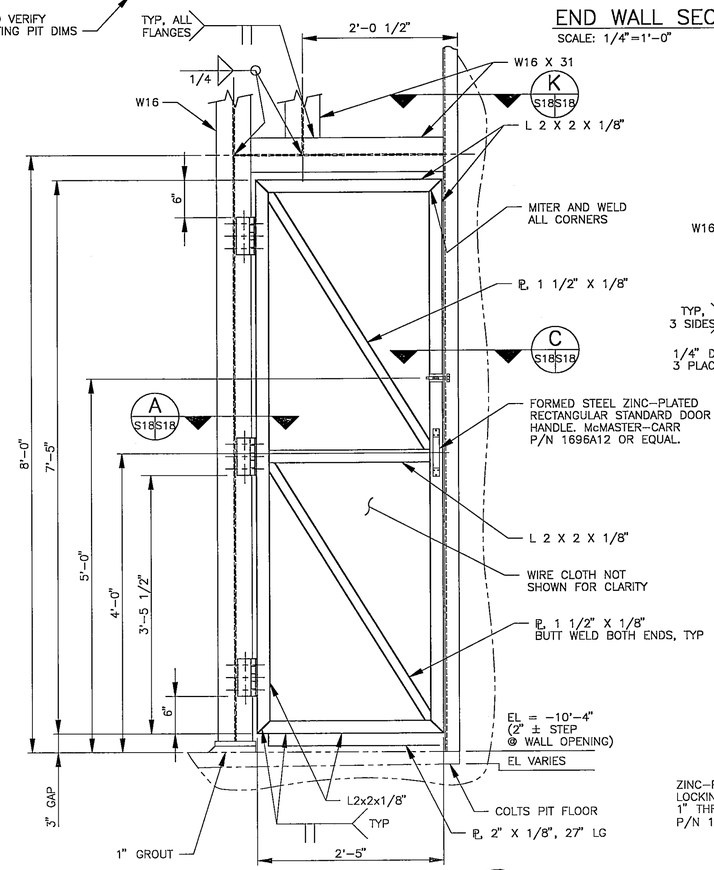

DOOR DETAIL 1 (S18/S18)
SCALE: 1" = 1'-0"
HOT DIP GALV DOOR AFTER FABRICATION

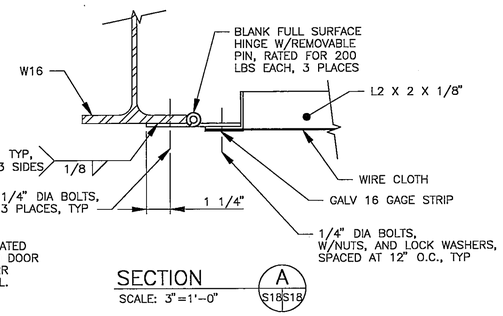

SECTION A (S18/S18)
SCALE: 3"=1'-0"

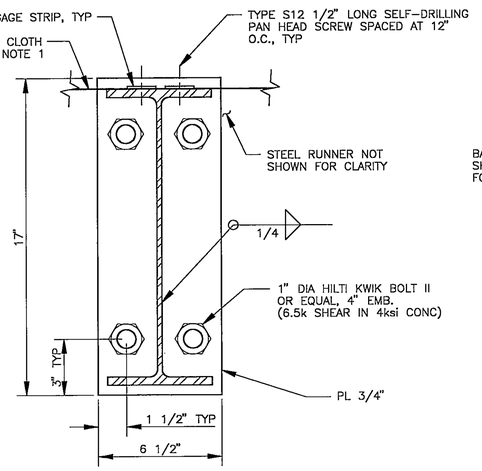

SECTION D (S18/S18)
SCALE: 3"=1'-0"
TYP @ TOP AND BOTTOM OF W16

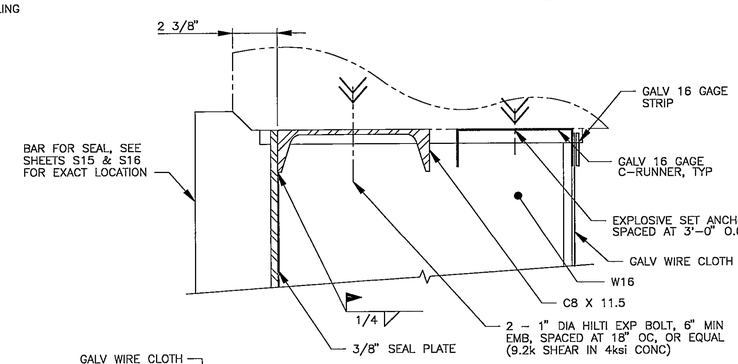

SECTION J (S18/S18)
SCALE: 3" = 1'-0"

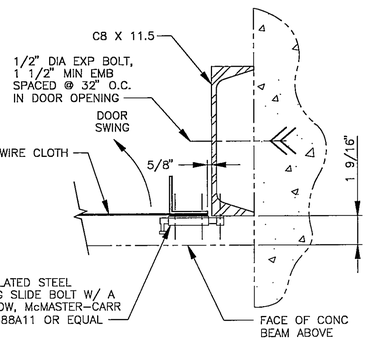

SECTION C (S18/S18)
SCALE: 3"=1'-0"

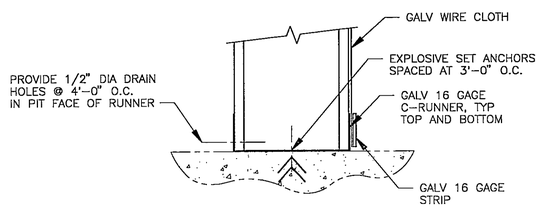

SECTION E (S18/S18)
SCALE: 3"=1'-0"

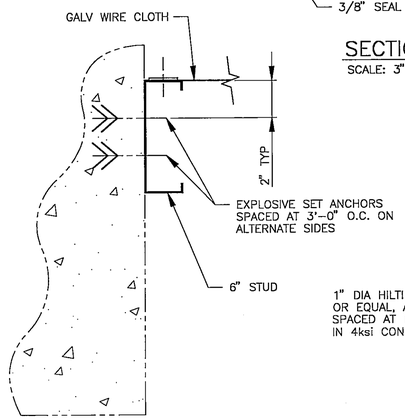

SECTION H (S18/S18)
SCALE: 3" = 1'-0"

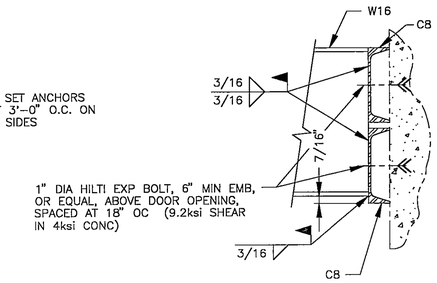

SECTION K (S18/S18)
SCALE: 1 1/2" = 1'-0"

FILE
JUN 2 1995

REVISIONS															
DATE	LTR	FREQ	DESCRIPTION	BY	CHECK	APPD	DATE	LTR	FREQ	DESCRIPTION	BY	CHECK	APPD

Sverdrup TECHNOLOGY INC.
LANGLEY DIVISION

WORK ORDER NO. RD08130A92/1118	
APPROVALS	DATE
DRAFT. P. MUIR	05/15/95
ENG. E. K. SVENDSEN	05/15/95
CHECK J. F. DOUGHERTY	05/15/95
PROJ. ENG. E. K. SVENDSEN	05/15/95
SUPV'N. D. O'LOUGHLIN	05/15/95

APPROVALS				
NAME	ORGANIZATION	DATE		DATE
(Clarence Rorrer)	FSED	5/15/95	DRAWN	
			DESIGNED	
			CHECKED	5/15/95
			APPROVED	5/15/95
			TECH. PROJ. ENG.	5/15/95
			RES. PROJ. ENG.	

TOLERANCE ON DIMENSIONS UNLESS SHOWN OTHERWISE: ANGULAR ± ; X.XX (2 DECIMAL PLACES) ±.02 ; X.XXX (3 DECIMAL PLACES) ±.005
SURFACE FINISH IN MICROINCHES RMS UNLESS SHOWN OTHERWISE

FOR DRAWING INDEX, LEGEND, AND ABBREVIATIONS, SEE DRAWING 260427

NATIONAL AERONAUTICS & SPACE ADMINISTRATION
LANGLEY RESEARCH CENTER
HAMPTON, VIRGINIA 23681-0001

PROJECT TITLE: COLTS REACTING PIT STEEL

DRAWING TITLE: SCREENED WALL

BUILDING NO. 1256 | SIZE D | DRAWING NO. 260444 | LATEST REV.
SHEET NO. S18

PBV

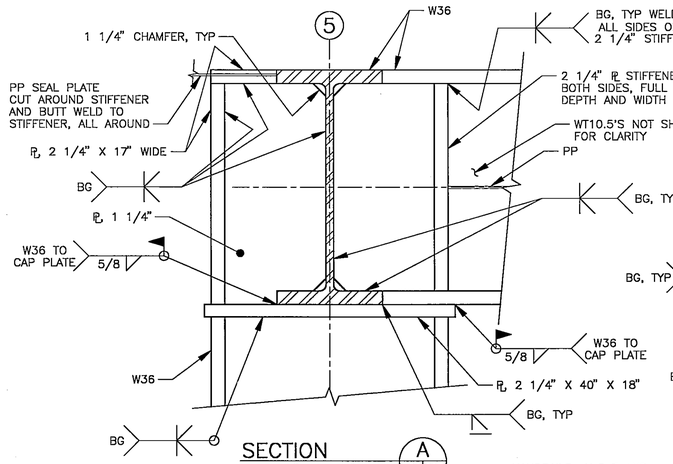

SECTION (A)
SCALE: 1" = 1'-0"
S4 S17

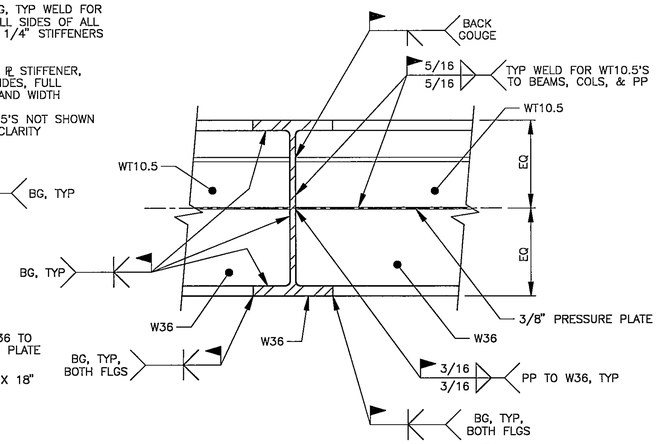

TYP W36–W36 CONNECTION (B)
SCALE: 3/4" = 1'-0"
S6 S17

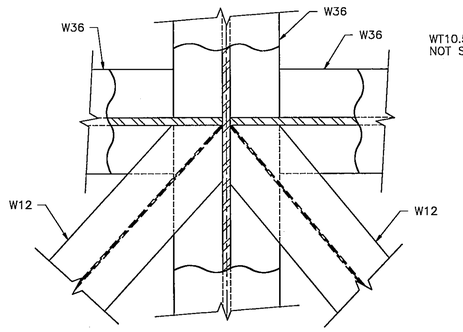

DETAIL (4)
SCALE: 1" = 1'-0"
S6 S17
FULL PENETRATION WELDS W/BACK GOUGING REQ'D AT ALL INTERSECTIONS OF MEMBERS (TYPICAL)

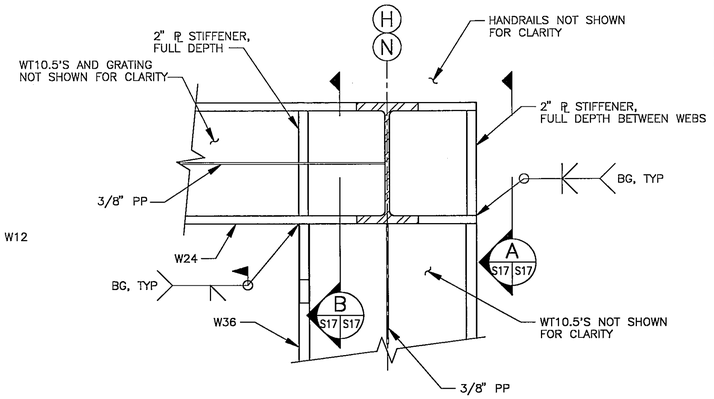

SECTION (A)
SCALE: 3/4" = 1'-0"
S7 S17
TYP @ COL LINES H6, H8, H10, N6, N8, AND N10

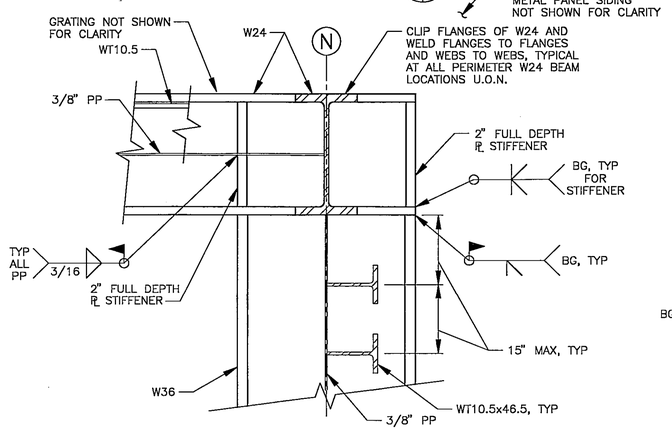

SECTION (B)
SCALE: 3/4" = 1'-0"
S7 S17
TYP @ COL LINES H5, H7, H9, H11, N5, N7, N9, N11, L5, K5, AND J5

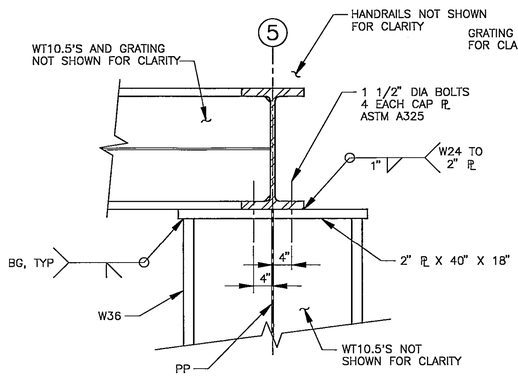

SECTION (C)
SCALE: 3/4" = 1'-0"
S7 S17

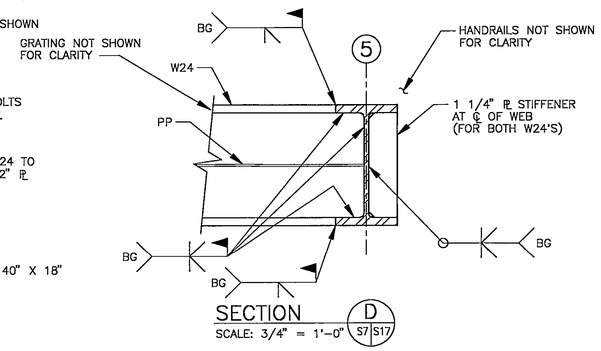

SECTION (D)
SCALE: 3/4" = 1'-0"
S7 S17

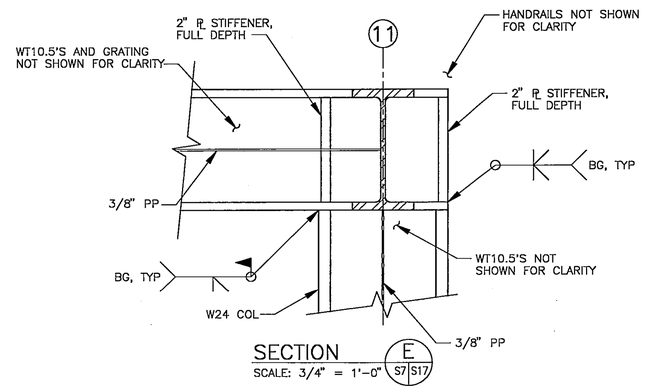

SECTION (E)
SCALE: 3/4" = 1'-0"
S7 S17

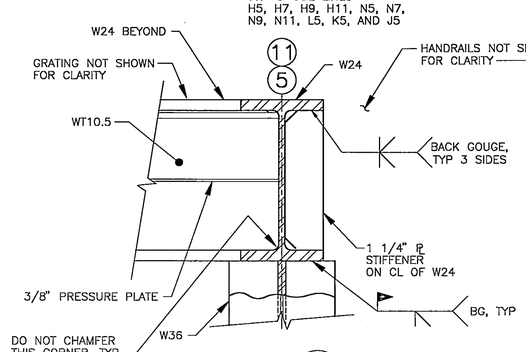

SECTION (F)
SCALE: 1" = 1'-0"
S7 S17
TYP @ COL LINES H5, H11, N5, AND N11

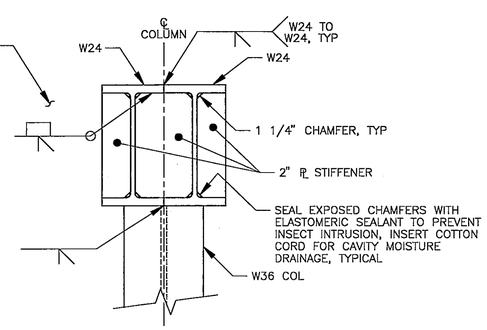

DETAIL (A)
SCALE: 3/4" = 1'-0"
S17 S17

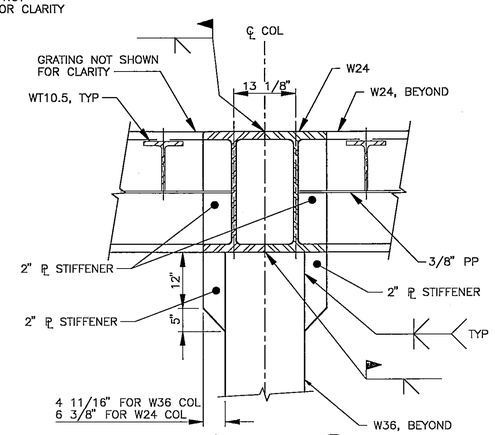

SECTION (B)
SCALE: 1" = 1'-0"
S17 S17

FILE
JUN 2 1995

FOR DRAWING INDEX, LEGEND AND ABBREVIATIONS, SEE DRAWING 260427

NATIONAL AERONAUTICS & SPACE ADMINISTRATION
LANGLEY RESEARCH CENTER
HAMPTON, VIRGINIA 23681-0001

PROJECT TITLE: COLTS REACTING PIT STEEL

DRAWING TITLE: SECTIONS AND DETAILS, SHEET 3

BUILDING NO. 1256 | SIZE D | DRAWING NO. 260443 | LATEST REV.

SHEET NO. S17

REVISIONS															
DATE	LTR	FREQ	DESCRIPTION	BY	CHECK	APPD	DATE	LTR	FREQ	DESCRIPTION	BY	CHECK	APPD

Sverdrup TECHNOLOGY INC.
LANGLEY DIVISION

WORK ORDER NO. RD08130A92/1118

APPROVALS	DATE
DRAFT. P. MUIR	05/15/95
ENG. E. K. SVENDSEN	05/15/95
CHECK J. F. DOUGHERTY	05/15/95
PROJ. ENG. E. K. SVENDSEN	05/15/95
SUPVN. D. O'LOUGHLIN	05/15/95

APPROVALS	NAME	ORGANIZATION	DATE	
DRAWN		FSED	5/15/95	
DESIGNED				
CHECKED				5/15/95
APPROVED				5/15/95
TECH. PROJ. ENG.				5/15/95
RES. PROJ. ENG.				

TOLERANCE ON DIMENSIONS UNLESS SHOWN OTHERWISE: ANGULAR ±; X.XX (2 DECIMAL PLACES) ±.02; X.XXX (3 DECIMAL PLACES) ±.005

SURFACE FINISH IN MICRONCHES RMS UNLESS SHOWN OTHERWISE √

PBV

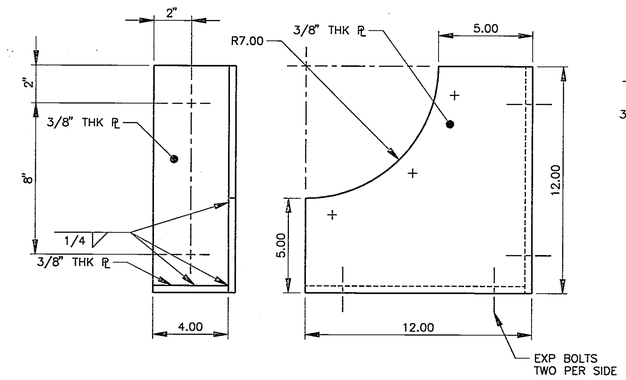

SOUTH SEAL ANGLE
SCALE: 1/4" = 1"

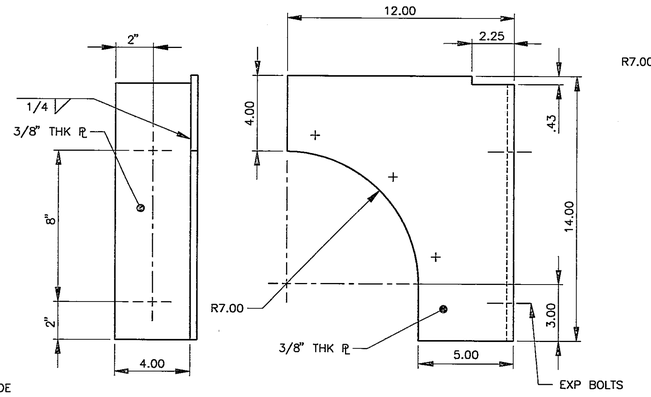

NORTH SEAL ANGLE
SCALE: 1/4" = 1"

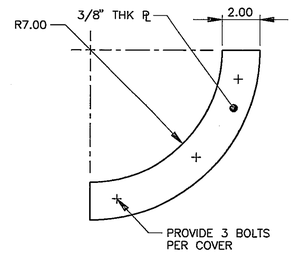

OUTBOARD SEAL COVER
SCALE: 1/4" = 1"

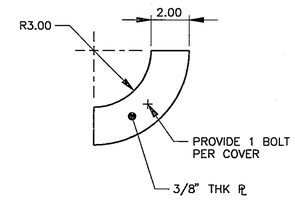

INBOARD SEAL COVER
SCALE: 1/4" = 1"

NOTES:

1. REMOVE ALL BURRS AND SHARP EDGES TO .02 MAX UNLESS OTHERWISE NOTED.
2. ALL PLATES AND ROLLED SHAPES FOR PIT SEAL ANGLES SHALL BE ASTM A36 STEEL.
3. UNLESS OTHERWISE NOTED, ALL EXPANSION BOLTS SHOWN ON THIS SHEET SHALL BE 3/4" DIA HILTI, HD1 OR EQUAL. THE BOLTS SHALL BE GOOD FOR 4.4 KIPS SHEAR IN 4 KSI CONC. MIN EMBEDMENT SHALL BE 3 INCHES.
4. ALL DETAILS ON THIS SHEET ARE FOR THE SEAL ON THE EAST SIDE OF THE REACTING STEEL STRUCTURE. PROVIDE MIRRORED PARTS FOR INSTALLATION ON THE WEST SIDE OF THE REACTING STEEL STRUCTURE.

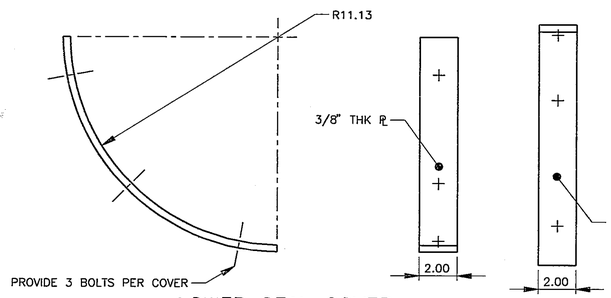

LOWER SEAL COVER
SCALE: 1/4" = 1"
PROVIDE ONE EACH FOR OUTBOARD AND INBOARD SIDE OF SEAL

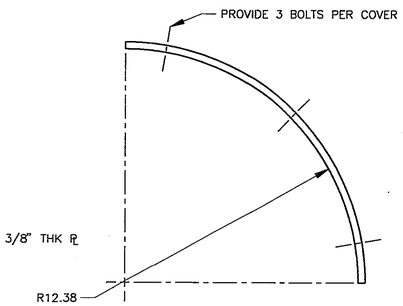

UPPER SEAL COVER
SCALE: 1/4" = 1"
PROVIDE ONE EACH FOR OUTBOARD AND INBOARD SIDE OF SEAL

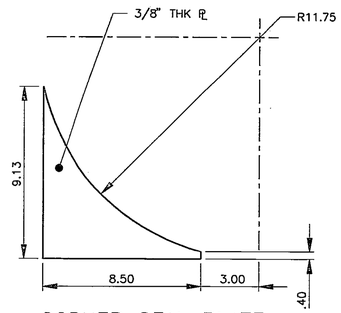

CORNER SEAL PLATE
SCALE: 1/4" = 1"

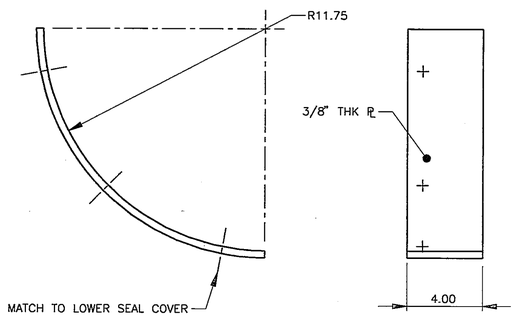

SEAL PLATE FOR LOWER COVER
SCALE: 1/4" = 1"

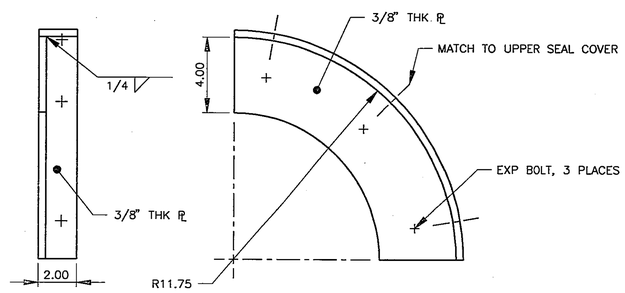

SEAL ANGLE FOR UPPER COVER
SCALE: 1/4" = 1"

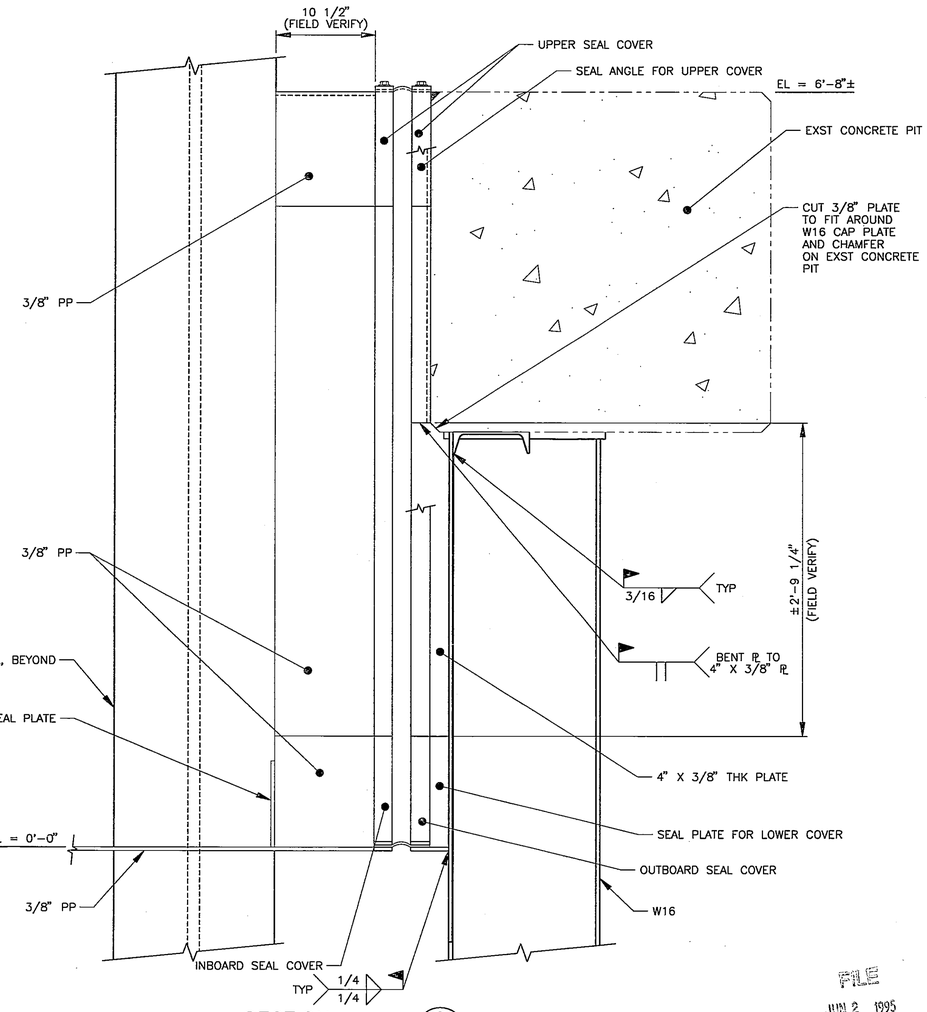

SECTION A
SCALE: 1 1/2" = 1'-0"
S15 S16

FILE
JUN 2 1995

REVISIONS						
DATE	LTR	FREQ	DESCRIPTION	BY	CHECK	APPD

REVISIONS						
DATE	LTR	FREQ	DESCRIPTION	BY	CHECK	APPD

Sverdrup
TECHNOLOGY INC.
LANGLEY DIVISION

WORK ORDER NO. RD08130A92/1118

APPROVALS	DATE
DRAFT	5/15/95
ENG.	5/15/95
CHECK	5/15/95
PROJ. ENG.	5/15/95
SHOWN	5/15/95

APPROVALS				
NAME	ORGANIZATION	DATE		DATE
J. W. Mayhew	FSED	5/15/95	DRAWN	
			DESIGNED	
			CHECKED	5/15/95
			APPROVED	5/16/95
			TECH. PROJ. ENG.	5/16/95
			RES. PROJ. ENG.	

TOLERANCE ON DIMENSIONS UNLESS SHOWN OTHERWISE — ANGULAR ± X.XX (2 DECIMAL PLACES) ±.02 X.XXX (3 DECIMAL PLACES) ±.005
SURFACE FINISH IN MICRONICHES RMS UNLESS SHOWN OTHERWISE √

FOR DRAWING INDEX, LEGEND AND ABBREVIATIONS, SEE DRAWING 260427

NATIONAL AERONAUTICS & SPACE ADMINISTRATION
LANGLEY RESEARCH CENTER
HAMPTON, VIRGINIA 23681-0001

PROJECT TITLE: COLTS REACTING PIT STEEL

DRAWING TITLE: PIT SEAL DETAILS

BUILDING NO. 1256 | SIZE D | DRAWING NO. 260442 | LATEST REV.

SHEET NO. S16

PBV

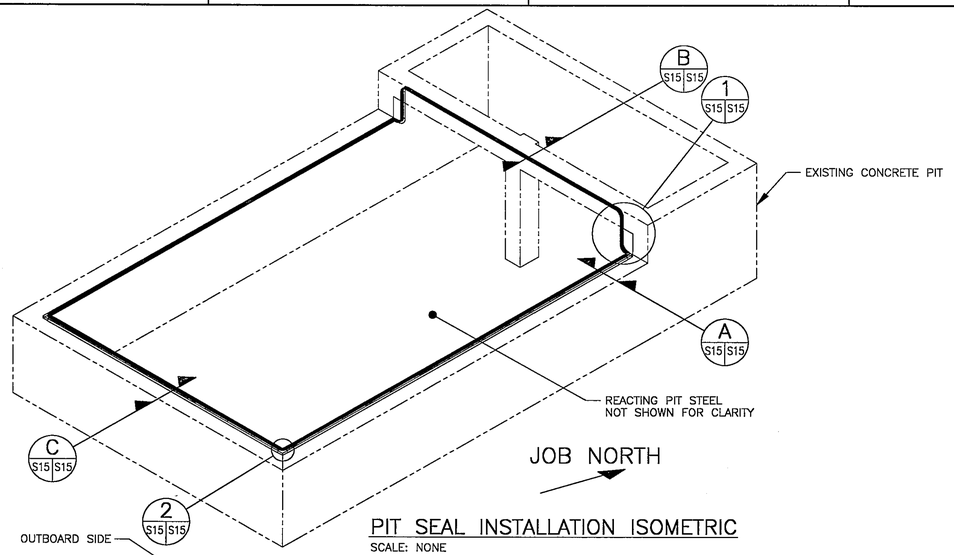

PIT SEAL INSTALLATION ISOMETRIC

SCALE: NONE

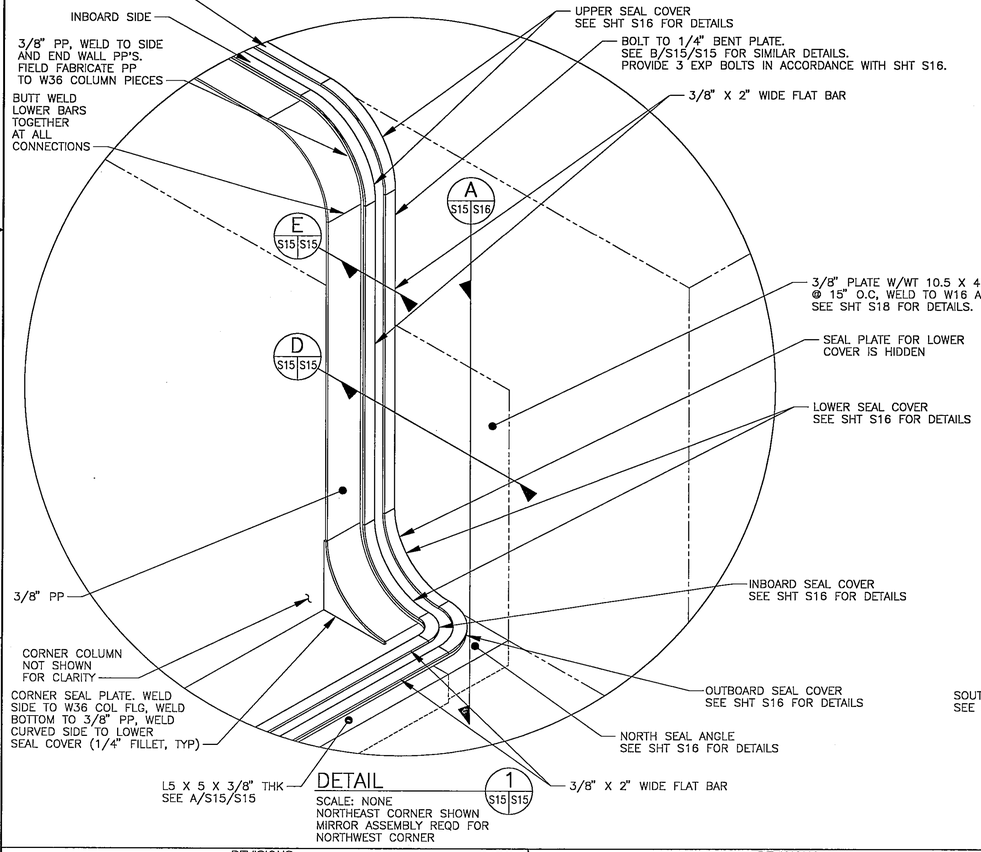

DETAIL 1 (S15 S15)

SCALE: NONE
NORTHEAST CORNER SHOWN
MIRROR ASSEMBLY REQD FOR NORTHWEST CORNER

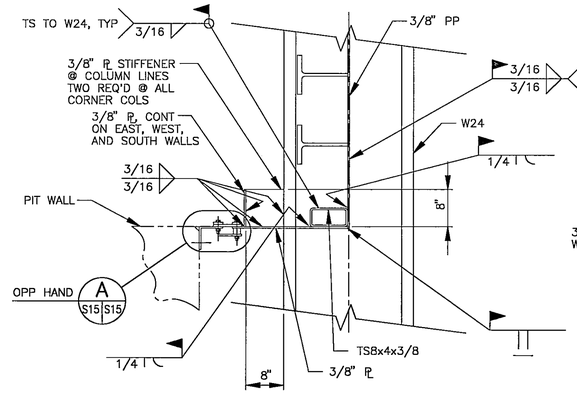

SECTION C (S15 S15)

SCALE: 3/4" = 1'-0"

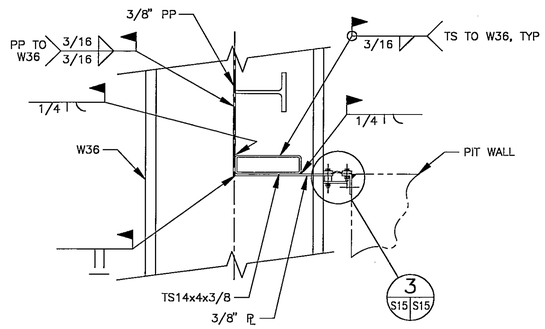

SECTION B (S15 S15)

SCALE: 3/4" = 1'-0"

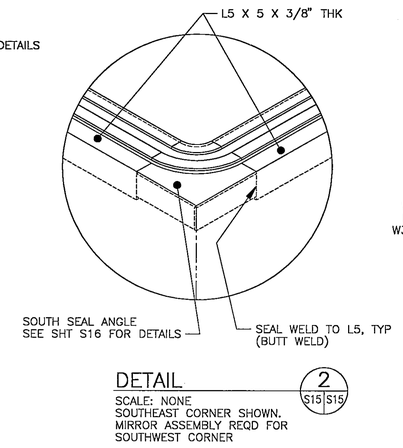

DETAIL 2 (S15 S15)

SCALE: NONE
SOUTHEAST CORNER SHOWN.
MIRROR ASSEMBLY REQD FOR SOUTHWEST CORNER

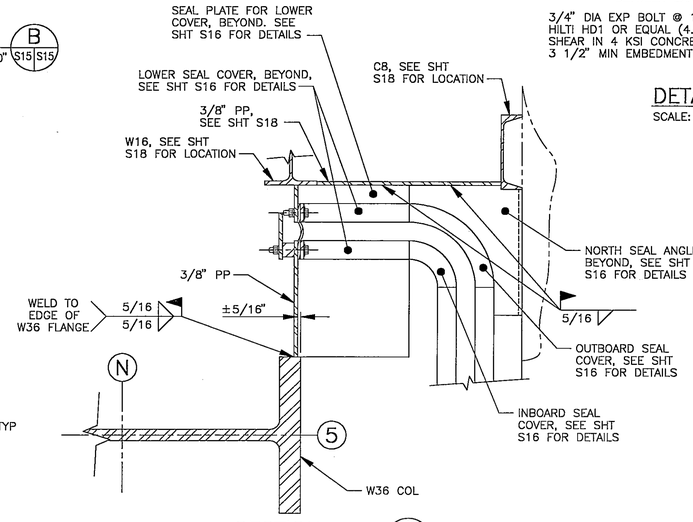

SECTION D (S15 S15)

SCALE: 1 1/2" = 1'-0"

NOTES:

1. SEAL SHALL BE INDUSTRIAL GRADE CLOTH-INSERTED NEOPRENE RUBBER SHEETING WITH A TEMPERATURE RANGE OF -20°F TO 220°F, A TENSILE STRENGTH OF 1000 PSI, A DUROMETER HARDNESS OF SHORE A 45-55, AND SHALL MEET ASTM D-2000-75E, TYPE BC. ALL JOINTS IN SEAMS SHALL BE HEAT SEALED IN ACCORDANCE WITH THE MANUFACTURER'S RECOMMENDATIONS.

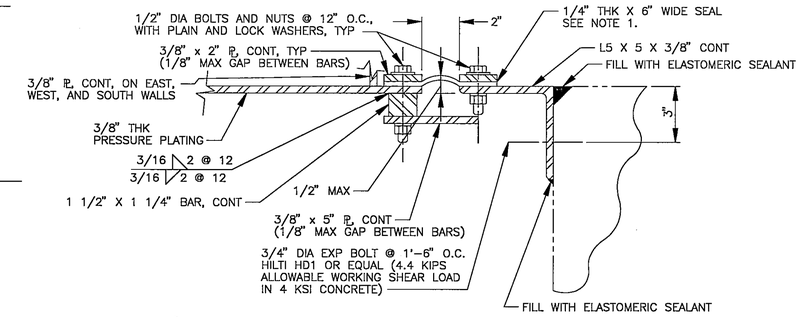

SECTION A (S6 S15 S15)

SCALE: 1/4" = 1"

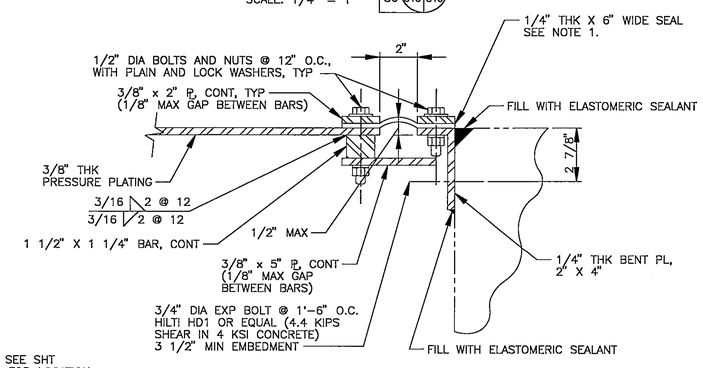

DETAIL 3 (S15 S15)

SCALE: 1/4" = 1"

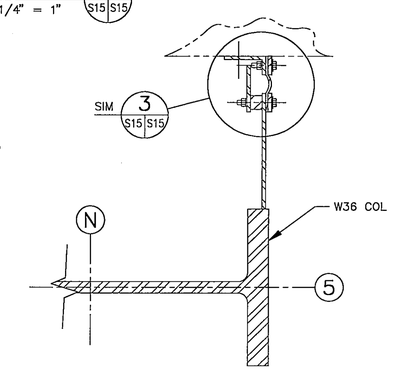

SECTION E (S15 S15)

SCALE: 1 1/2" = 1'-0"

FILE
JUN 2 1995

FOR DRAWING INDEX, LEGEND AND ABBREVIATIONS, SEE DRAWING 260427

NATIONAL AERONAUTICS & SPACE ADMINISTRATION
LANGLEY RESEARCH CENTER
HAMPTON, VIRGINIA 23681-0001

PROJECT TITLE: COLTS REACTING PIT STEEL

DRAWING TITLE: PIT SEAL INSTALLATION

BUILDING NO. 1256 | SIZE D | DRAWING NO. 260441 | LATEST REV.

SHEET NO. S15

REVISIONS

DATE	LTR	FREQ	DESCRIPTION	BY	CHECK	APPD

REVISIONS

DATE	LTR	FREQ	DESCRIPTION	BY	CHECK	APPD

Sverdrup TECHNOLOGY INC.
LANGLEY DIVISION

WORK ORDER NO. RD08130A92/1118

APPROVALS	DATE
DRAFT. P. MUIR	05/15/95
ENG. E. K. SVENDSEN	05/15/95
CHECK J. F. DOUGHERTY	05/15/95
PROJ. ENG. E. K. SVENDSEN	05/15/95
SUPV'N. D. O'LOUGHLIN	05/15/95

APPROVALS

	NAME	ORGANIZATION	DATE
DRAWN		FSED	5/15/95
DESIGNED			
CHECKED			5/15/95
APPROVED			5/15/95
TECH. PROJ. ENG.			5/15/95
RES. PROJ. ENG.			

TOLERANCE ON DIMENSIONS UNLESS SHOWN OTHERWISE: ANGULAR ±; X.XX (2 DECIMAL PLACES) ±.02; X.XXX (3 DECIMAL PLACES) ±.005

SURFACE FINISH IN MICROINCHES RMS UNLESS SHOWN OTHERWISE √

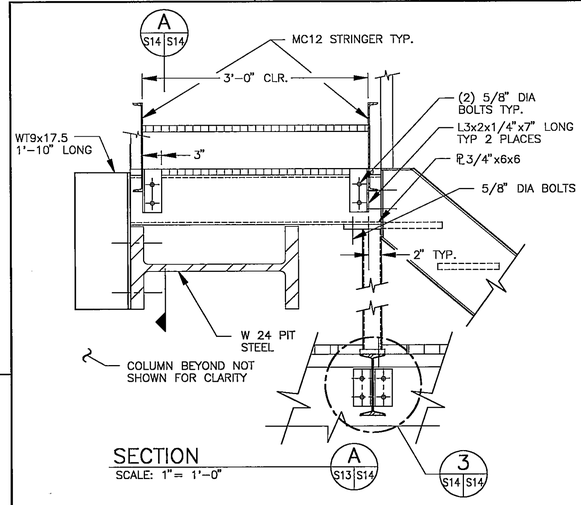

SECTION A
SCALE: 1"= 1'-0" (S13 S14)

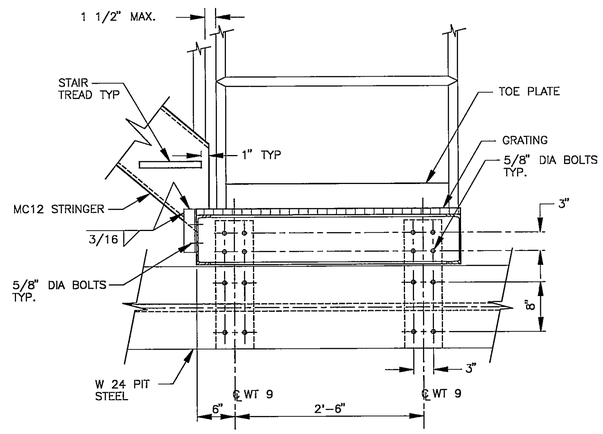

SECTION A
SCALE: 1"= 1'-0" (S14 S14)

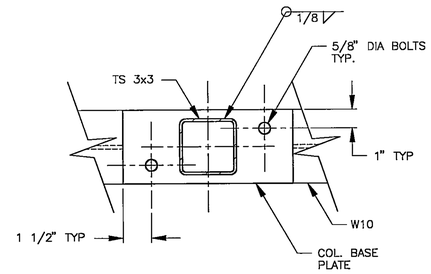

SECTION B
SCALE: 1 1/2"= 1'-0" (S13 S14)

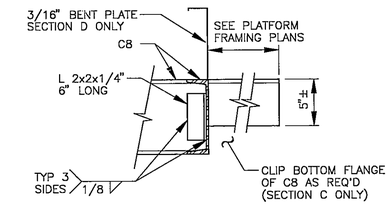

SECTION C D
SCALE: 1 1/2"= 1'-0" (S13 S14 S13 S14)

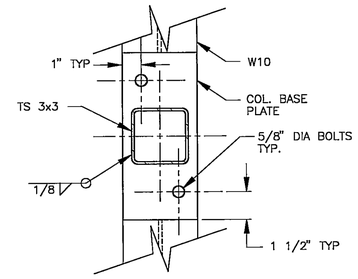

SECTION E
SCALE: 3"= 1'-0" (S14 S14)

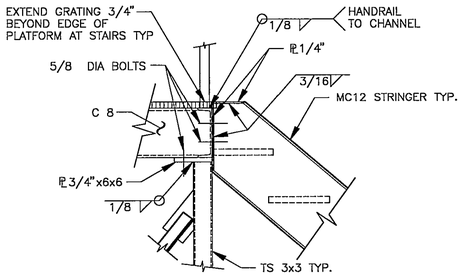

DETAIL 1
SCALE: 1"= 1'-0" (S13 S14)

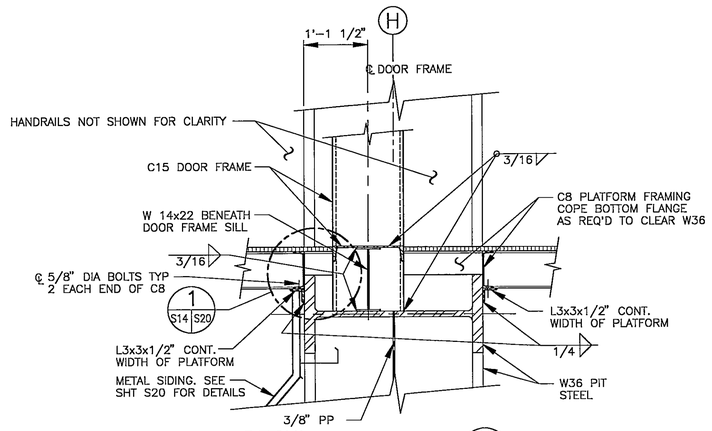

DETAIL 2
SCALE: 3/4"= 1'-0" (S13 S14)

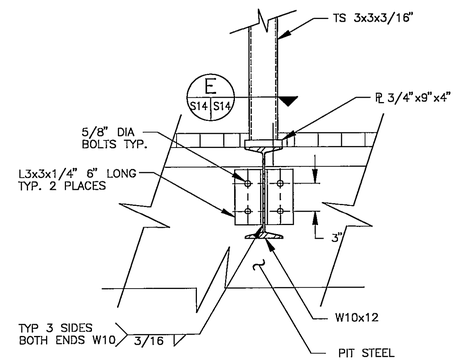

DETAIL 3
SCALE: 1 1/2"= 1'-0" (S14 S13 S14)

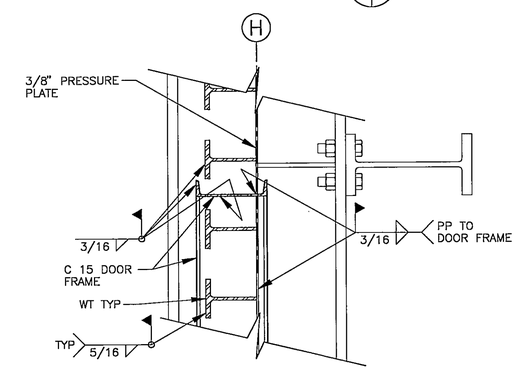

WT AND PRESSURE PLATE TO DOOR FRAME CONNECTION
SCALE: 3/4"= 1'-0" (S13 S14)

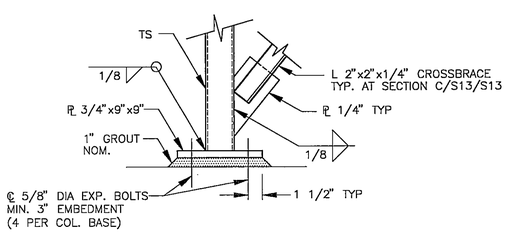

DETAIL 4
SCALE: 1 1/2"= 1'-0" (S13 S14)

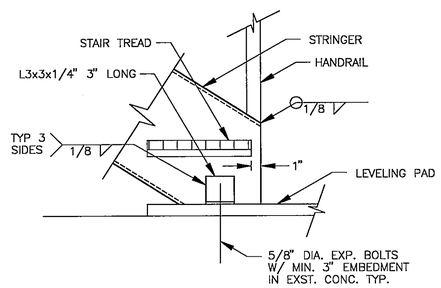

DETAIL 5
SCALE: 1 1/2"= 1'-0" (S13 S14)

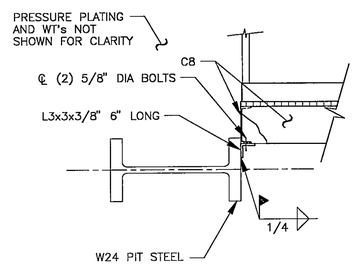

DETAIL 6
SCALE: 3/4"= 1'-0" (S12 S13 S14)

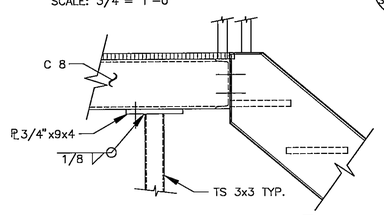

DETAIL 7
SCALE: 1"= 1'-0" (S13 S14)

FILE
JUN 2 1999

SEE DETAIL 1/S13/S14 FOR INFORMATION NOT SHOWN

REVISIONS							REVISIONS						
DATE	LTR	FREQ	DESCRIPTION	BY	CHECK	APPD	DATE	LTR	FREQ	DESCRIPTION	BY	CHECK	APPD

Sverdrup
TECHNOLOGY INC.
LANGLEY DIVISION

WORK ORDER NO. RD08130A92/1118

APPROVALS	DATE
DRAFT. D. R. HUTCHINSON	05/15/95
ENG. D. R. HUTCHINSON	05/15/95
CHECK J. F. DOUGHERTY	05/15/95
PROJ. ENG. E. K. SVENDSEN	05/15/95
SUPV'N. D. O'LOUGHLIN	05/15/95

APPROVALS	NAME	ORGANIZATION	DATE		DATE
		FSED	5/15/95	DRAWN	
				DESIGNED	
				CHECKED	5/15/95
				APPROVED	5/15/95
				TECH. PROJ. ENG.	5/15/95
				RES. PROJ. ENG.	

TOLERANCE ON DIMENSIONS UNLESS SHOWN OTHERWISE — ANGULAR ± X.XX (2 DECIMAL PLACES) ±.02, X.XXX (3 DECIMAL PLACES) ±.005
SURFACE FINISH IN MICRONCHES RMS UNLESS SHOWN OTHERWISE √

FOR DRAWING INDEX, LEGEND AND ABBREVIATIONS, SEE DRAWING 260427

NATIONAL AERONAUTICS & SPACE ADMINISTRATION
LANGLEY RESEARCH CENTER
HAMPTON, VIRGINIA 23681-0001

PROJECT TITLE: COLTS REACTING PIT STEEL

DRAWING TITLE: STAIR DETAILS

BUILDING NO. 1256 | SIZE D | DRAWING NO. 260440 | LATEST REV.

SHEET NO. S14

REV

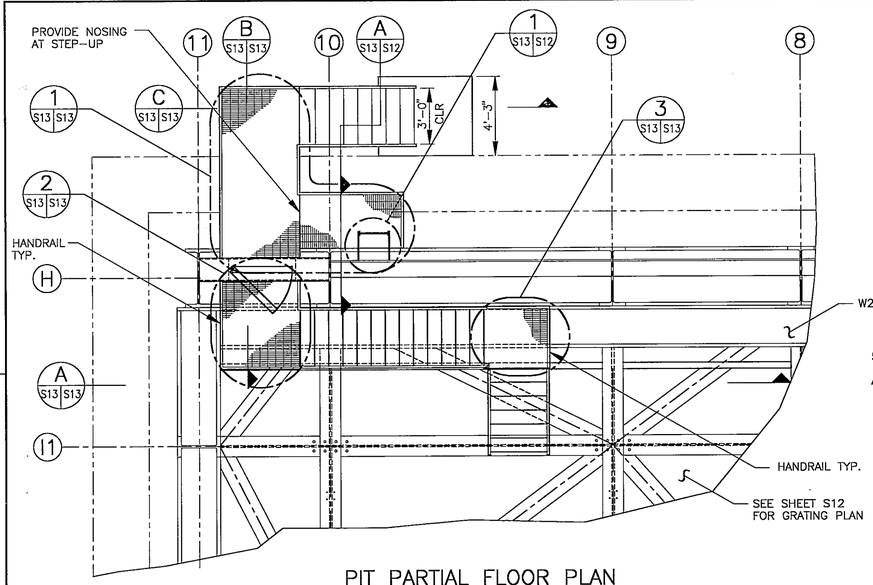

PIT PARTIAL FLOOR PLAN

SCALE: 1/4" = 1'-0"

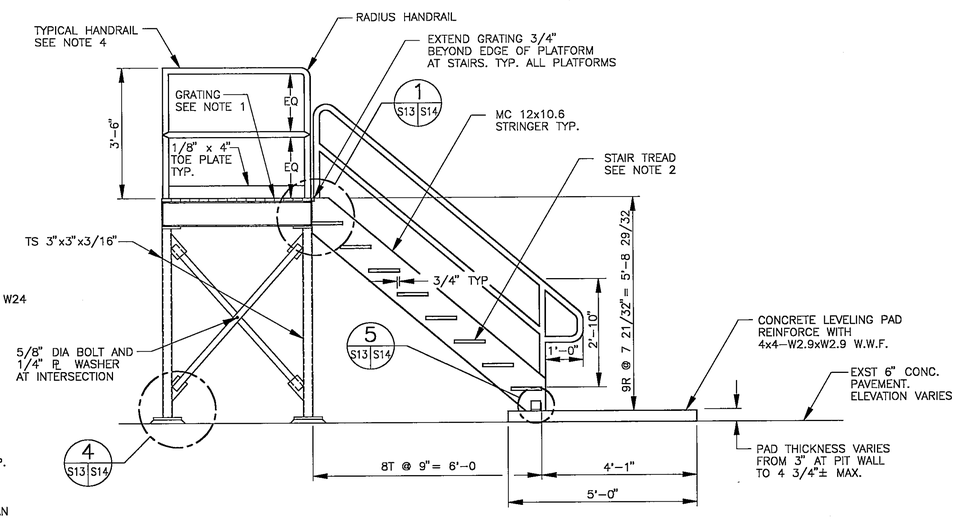

SECTION THRU EXTERIOR PLATFORM (C S13|S13)

SCALE: 1/2" = 1'-0"

GENERAL NOTES

1. GRATING SHALL BE HOT DIPPED GALVANIZED STEEL IKG/BORDEN WB OR EQUAL. BEARING BARS SHALL BE 1"x 3/16" SPACED AT 1 13/16" O.C. GRATING SHALL BE ABLE TO SAFELY SUSTAIN A UNIFORMLY DISTRIBUTED 100 PSF LIVE LOAD ON A 4'-6" SINGLE SPAN AND DEFLECT LESS THAN 1/4" UNDER THIS LOAD. WHERE GRATING HAS BEEN CUT, EDGES SHALL BE BANDED. GRATING SHALL BE INSTALLED ON FRAMING USING HOT DIPPED GALVANIZED SADDLE CLIPS AND BOLTS WITH SPACING OF CLIPS BASED ON MANUFACTURERS RECOMMENDATIONS.
2. STAIR TREADS TO BE IKG BORDEN HOT DIPPED GALVANIZED STEEL TYPE WB-4 OR EQUAL. TREADS SHALL BE 9 3/4" DEEP x 3'-0" WIDE WITH 1"x3/16" BEARING BARS AND MEBAC ANTI-SLIP NOSING.
3. PRE-ENGINEERED SWINGING BLAST DOOR SHALL BE OVERLY MODEL MRB-5 OR EQUAL DESIGNED TO RESIST A STATIC EQUIVALENT PRESSURE OF 40 PSI IN BOTH THE SEATING AND UNSEATING DIRECTION. FRAMING FOR BLAST DOOR SHALL BE IN ACCORDANCE WITH MANUFACTURER'S SPECIFICATIONS. FINISHED DOOR OPENING SHALL BE A MINIMUM OF 2'-8" WIDE x 6'-9" TALL.
4. ALL HANDRAILS (INTERIOR AND EXTERIOR) SHALL BE 1 1/2" NOMINAL DIA. SCH 80 GALVANIZED PIPE.

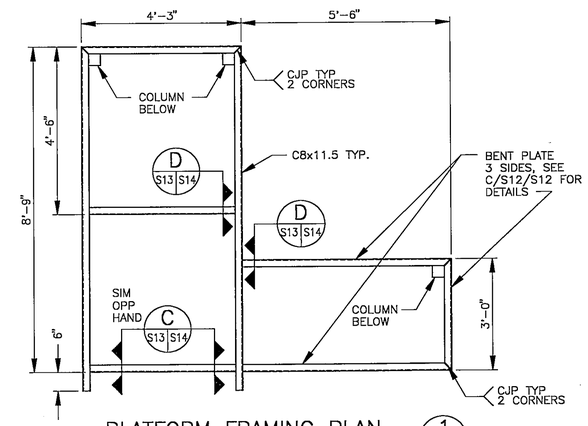

PLATFORM FRAMING PLAN (1 S13|S13)

SCALE: 1/2" = 1'-0"

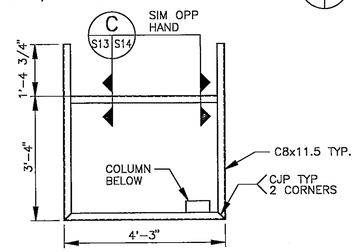

PLATFORM FRAMING PLAN (2 S13|S13)

SCALE: 1/2" = 1'-0"

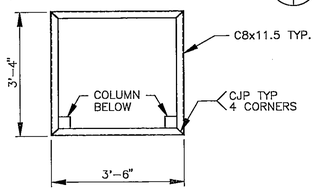

PLATFORM FRAMING PLAN (3 S13|S13)

SCALE: 1/2" = 1'-0"

FILE
JUN 2 1995

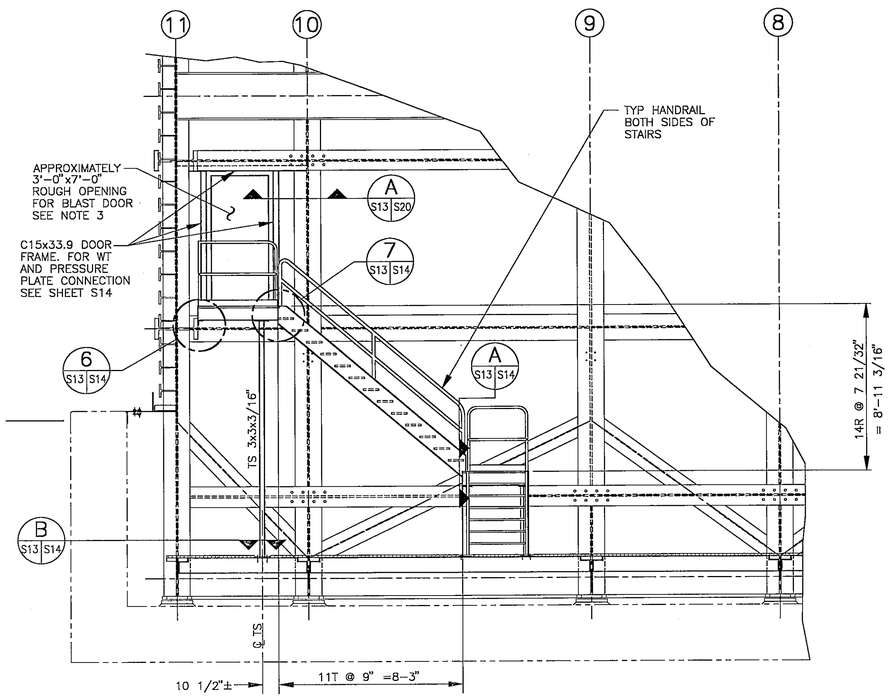

SECTION (A S13|S13)

SCALE: 1/4" = 1'-0"

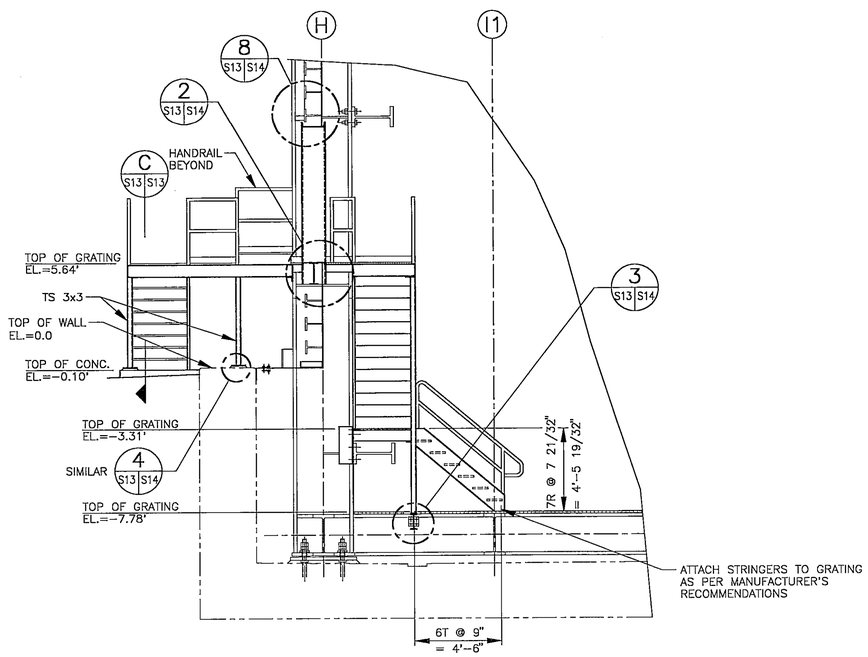

SECTION (B S13|S13)

SCALE: 1/4" = 1'-0"

REVISIONS															
DATE	LTR	FREQ	DESCRIPTION	BY	CHECK	APPD	DATE	LTR	FREQ	DESCRIPTION	BY	CHECK	APPD

Sverdrup
TECHNOLOGY INC.
LANGLEY DIVISION

WORK ORDER NO.	RD08130A92/1118	
APPROVALS		DATE
DRAFT. D. R. HUTCHINSON		05/15/95
ENG. D. R. HUTCHINSON		05/15/95
CHECK J. F. DOUGHERTY		05/15/95
PROJ. ENG. E. K. SVENDSEN		05/15/95
SUPV'N. D. O'LOUGHLIN		05/15/95

APPROVALS				
NAME	ORGANIZATION	DATE		DATE
	PSED	5/15/95	DRAWN	
			DESIGNED	
			CHECKED	5/15/95
			APPROVED	5/15/95
			TECH. PROJ. ENG.	5/15/95
			RES. PROJ. ENG.	

TOLERANCE ON DIMENSIONS UNLESS SHOWN OTHERWISE: ANGULAR ± ; X.XX (2 DECIMAL PLACES) ±.02 ; X.XXX (3 DECIMAL PLACES) ±.005

SURFACE FINISH IN MICROINCHES RMS UNLESS SHOWN OTHERWISE √

FOR DRAWING INDEX, LEGEND AND ABBREVIATIONS, SEE DRAWING 260427

NATIONAL AERONAUTICS & SPACE ADMINISTRATION
LANGLEY RESEARCH CENTER
HAMPTON, VIRGINIA 23681-0001

PROJECT TITLE: COLTS REACTING PIT STEEL

DRAWING TITLE: STAIR PLAN AND SECTIONS

BUILDING NO. 1256 | SIZE D | DRAWING NO. 260439 | LATEST REV.

SHEET NO. S13

PBV

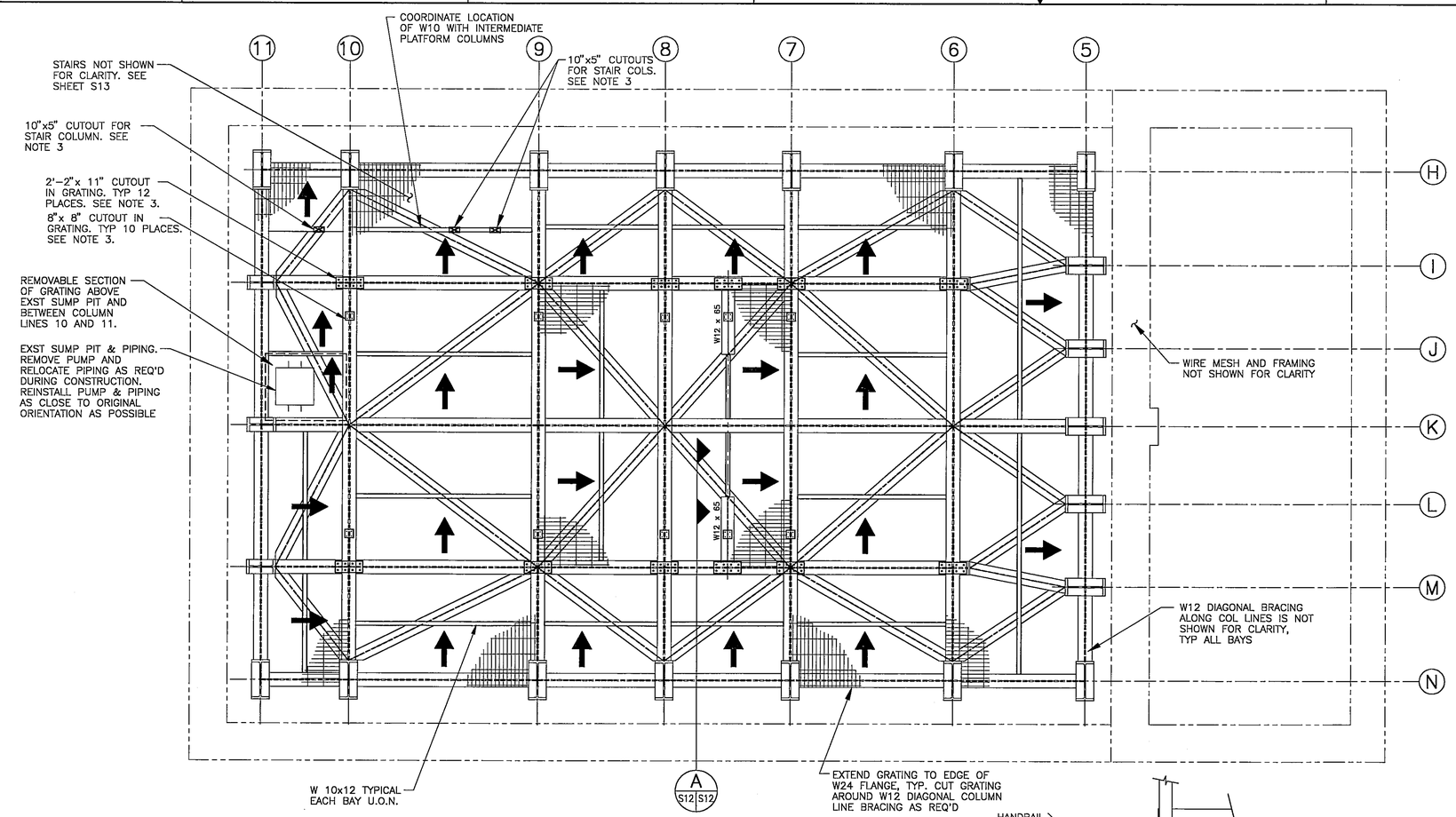

COLTS PIT FLOOR GRATING PLAN

SCALE: 3/16" = 1'-0"

GENERAL NOTES

1. PIT FLOOR GRATING SHALL BE HOT DIPPED GALVANIZED STEEL IKG/BORDEN WB-A OR EQUAL. BEARING BARS SHALL BE 1 1/2"x 1/4" SPACED AT 1 13/16" O.C. GRATING SHALL BE ABLE TO SAFELY SUSTAIN A UNIFORMLY DISTRIBUTED LIVE LOAD OF 250 PSF ON A 6'-0" SINGLE SPAN. ALL EDGES SHALL BE BANDED INCLUDING CUTOUTS. GRATING SHALL BE INSTALLED ON FRAMING USING HOT DIPPED GALVANIZED SADDLE CLIPS AND BOLTS WITH SPACING OF CLIPS BASED ON MANUFACTURER'S RECOMMENDATIONS.
2. ↑ INDICATES DIRECTION OF GRATING BEARING BARS.
3. BAND THE CUTOUT PORTION OF THE GRATING AND REINSTALL TO PROVIDE A LEVEL FLOOR. TYPICAL WHERE ANOTHER STRUCTURE DOES NOT FILL THE CUTOUT AREA.
4. GRATING PANELS SHALL NOT BE WELDED DOWN. CONTRACTOR SHALL PROVIDE SYSTEM FOR ANCHORING SADDLE CLIPS TO W24 FLOOR BEAMS. SYSTEM SHALL PROVIDE FOR REMOVAL OF GRATING WITHOUT REMOVAL OF ANY WELDS.

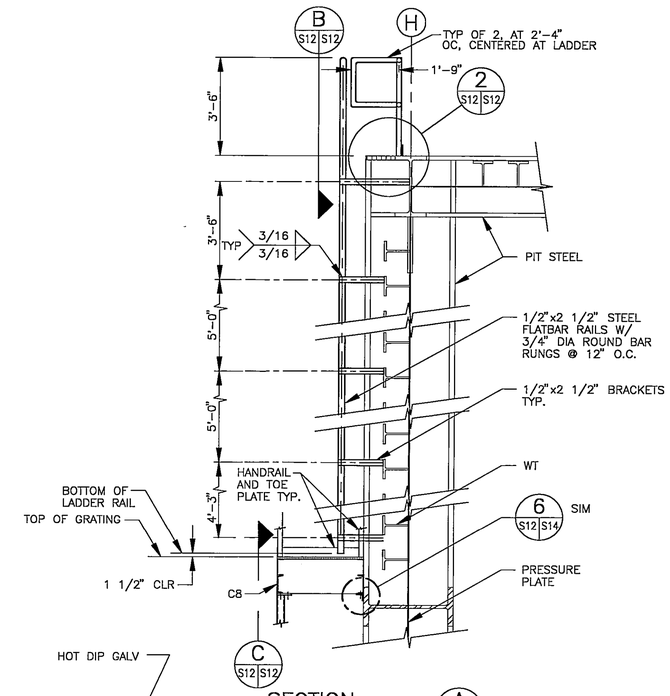

SECTION A

SCALE: 3/8" = 1'-0"

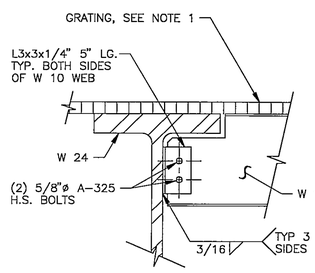

TYPICAL W 10 CONNECTION

SCALE: 1 1/2" = 1'-0"

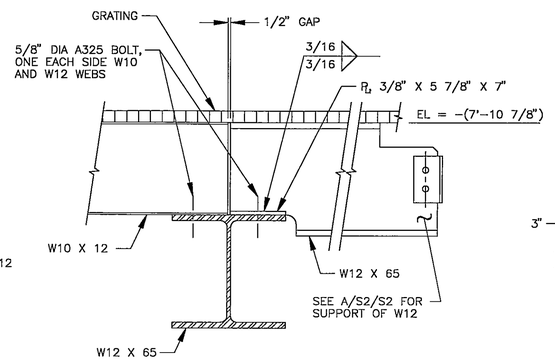

SECTION A

SCALE: 1 1/2" = 1'-0" S2 S12 S12

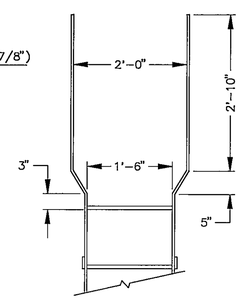

SECTION B

SCALE: 3/4" = 1'-0" S12 S12

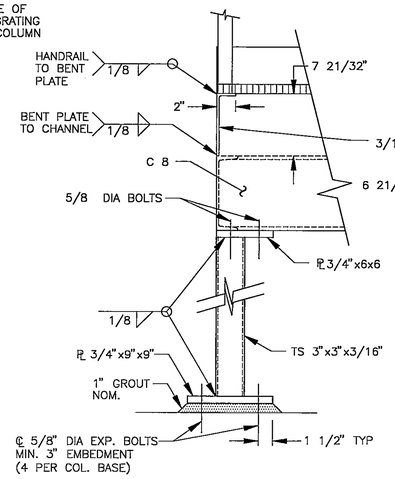

DETAIL C

SCALE: 1 1/2" = 1'-0" S12 S12

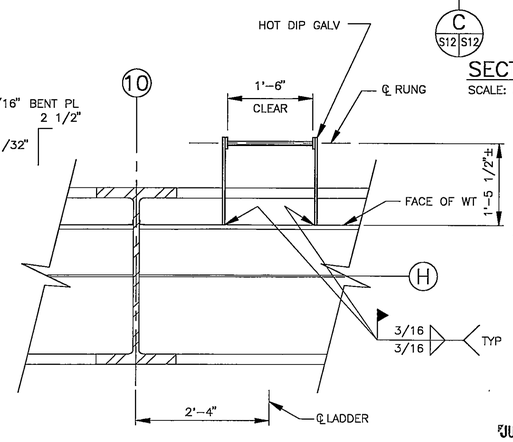

DETAIL 1

SCALE: 3/4" = 1'-0" S13 S12

PROVIDE GRATING IN ACCORDANCE W/ NOTE 1 ABOVE, EXCEPT GRATING DEPTH SHALL BE 1 3/4" DEEP BY 2'-3" WIDE

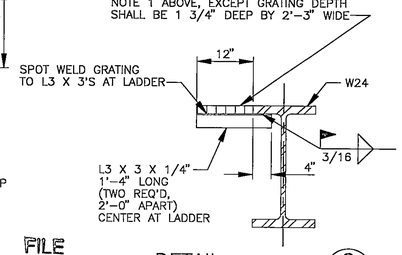

DETAIL 2

SCALE: 3/4" = 1'-0" S12 S12

FILE
JUN 2 1995

FOR DRAWING INDEX, LEGEND AND ABBREVIATIONS, SEE DRAWING 260427

NATIONAL AERONAUTICS & SPACE ADMINISTRATION
LANGLEY RESEARCH CENTER
HAMPTON, VIRGINIA 23681-0001

PROJECT TITLE: COLTS REACTING PIT STEEL

DRAWING TITLE: FLOOR GRATING AND CONNECTIONS

BUILDING NO. 1256 | SIZE D | DRAWING NO. 260438 | LATEST REV.

SHEET NO. S12

REVISIONS															
DATE	LTR	FREQ	DESCRIPTION	BY	CHECK	APPD	DATE	LTR	FREQ	DESCRIPTION	BY	CHECK	APPD

Sverdrup TECHNOLOGY INC.
LANGLEY DIVISION

WORK ORDER NO. RD08130A92/1118

APPROVALS	DATE
DRAFT. D. R. HUTCHINSON	05/15/95
ENG. D. R. HUTCHINSON	05/15/95
CHECK J. F. DOUGHERTY	05/15/95
PROJ. ENG. E. K. SVENDSEN	05/15/95
SUPVN. D. O'LOUGHLIN	05/15/95

APPROVALS	NAME	ORGANIZATION	DATE
DRAWN	J.W. Mayhew	FSED	5/15/95
DESIGNED			
CHECKED			5/15/95
APPROVED			5/15/95
TECH. PROJ. ENG.			5/15/95
RES. PROJ. ENG.			

TOLERANCE ON DIMENSIONS UNLESS SHOWN OTHERWISE — ANGULAR ± X.XX (2 DECIMAL PLACES) ±.02, X.XXX (3 DECIMAL PLACES) ±.005

SURFACE FINISH IN MICROINCHES RMS UNLESS SHOWN OTHERWISE ✓

PBV

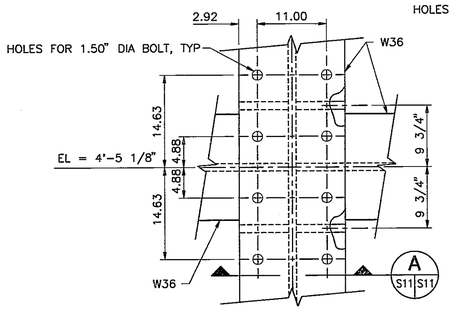

DETAIL 2 (S4 S11)
SCALE: 1" = 1'-0"
SHEAR STRUT CONNECTION
TYPICAL 2 PLACES
ONE EACH SIDEWALL

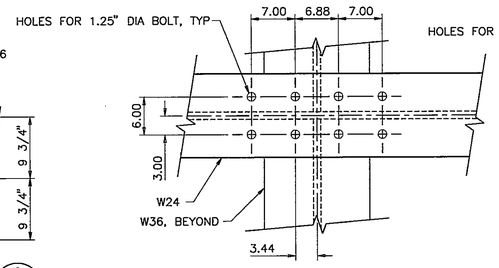

DETAIL 3 (S4 S11)
SCALE: 1" = 1'-0"
SHEAR ACTUATOR CONNECTION
TYPICAL 20 PLACES
10 EACH SIDEWALL

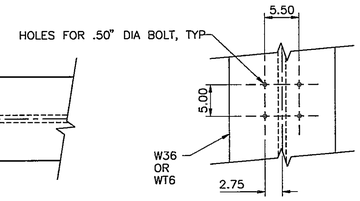

DETAIL 4 (S4 S11)
SCALE: 1" = 1'-0"
TYPICAL 10 PLACES
5 EACH SIDEWALL

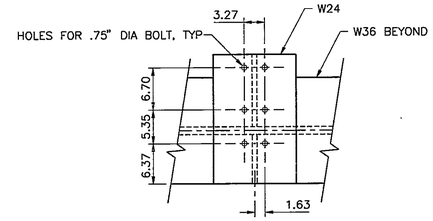

DETAIL 5 (S4 S11)
SCALE: 1" = 1'-0"
TYPICAL, 4 PLACES
TWO EACH SIDEWALL
SEE 2/S5/S5

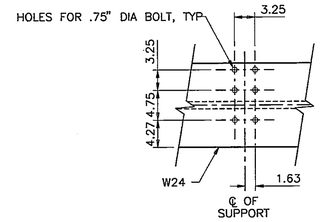

DETAIL 6 (S4 S11)
SCALE: 1" = 1'-0"
TYPICAL 4 PLACES
2 EACH SIDEWALL

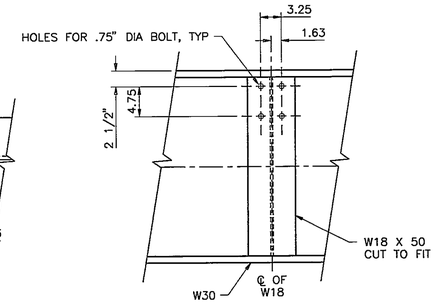

DETAIL 7 (S4 S11)
SCALE: 1" = 1'-0"
TYPICAL 4 PLACES
TWO EACH SIDEWALL

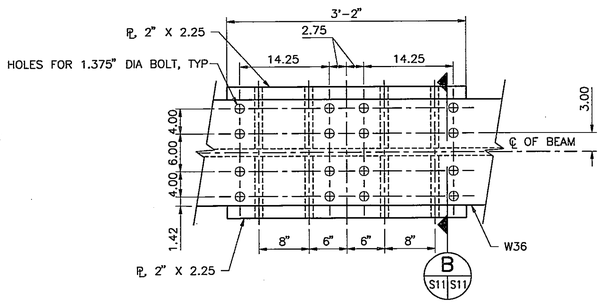

DETAIL 1 (S6 S11)
SCALE: 1" = 1'-0"
TYPICAL 4 PLACES ON
LOADED ENDWALL

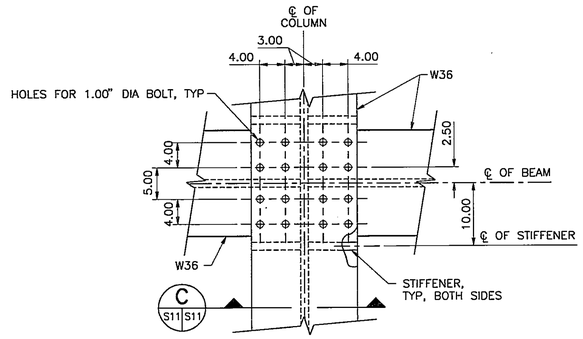

DETAIL 2 (S6 S11)
SCALE: 1" = 1'-0"
TYPICAL 4 PLACES ON
LOADED ENDWALL

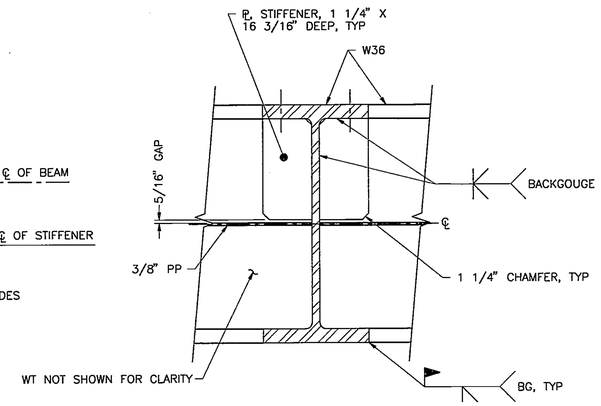

SECTION A (S11 S11)
SCALE: 1" = 1'-0"

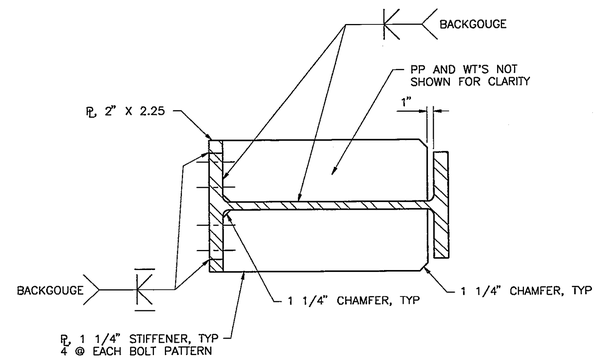

SECTION B (S11 S11)
SCALE: 1" = 1'-0"

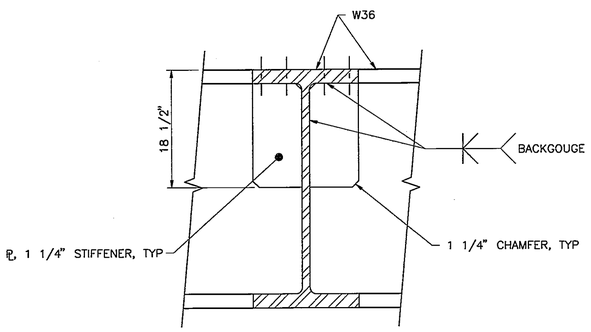

SECTION C (S11 S11)
SCALE: 1" = 1'-0"

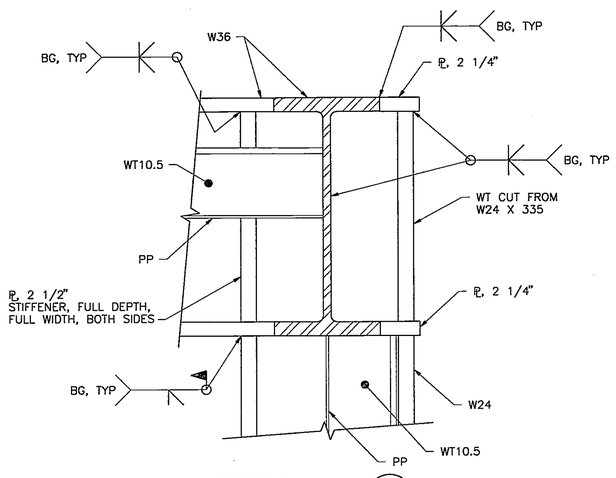

SECTION A (S4 S11)
SCALE: 1" = 1'-0"

FILE
JUN 2 1995

REVISIONS								REVISIONS							
DATE	LTR	FREQ	DESCRIPTION	BY	CHECK	APPD		DATE	LTR	FREQ	DESCRIPTION	BY	CHECK	APPD	

Sverdrup
TECHNOLOGY INC.
LANGLEY DIVISION

WORK ORDER NO. RD08130A92/1118

APPROVALS	DATE
DRAFT	5/15/95
ENG.	5/15/95
CHECK	5/15/95
PROJ. ENG.	5/15/95
PROJ. MGR.	5/15/95

APPROVALS				
NAME	ORGANIZATION	DATE		DATE
J.W. Mayhew	FSED	5/15/95	DRAWN	
			DESIGNED	
			CHECKED	5/15/95
			APPROVED	5/15/95
			TECH. PROJ. ENG.	5/15/95
			RES. PROJ. ENG.	

TOLERANCE ON DIMENSIONS UNLESS SHOWN OTHERWISE — ANGULAR ± — X.XX (2 DECIMAL PLACES) ±.02 — X.XXX (3 DECIMAL PLACES) ±.005
SURFACE FINISH IN MICROINCHES RMS UNLESS SHOWN OTHERWISE √

FOR DRAWING INDEX, LEGEND AND ABBREVIATIONS, SEE DRAWING 260427

NATIONAL AERONAUTICS & SPACE ADMINISTRATION
LANGLEY RESEARCH CENTER
HAMPTON, VIRGINIA 23681-0001

PROJECT TITLE: COLTS
REACTING PIT STEEL

DRAWING TITLE: SECTIONS AND DETAILS, SHEET 2

BUILDING NO. 1256 | SIZE D | DRAWING NO. 260437 | LATEST REV.

SHEET NO. S11

PBV

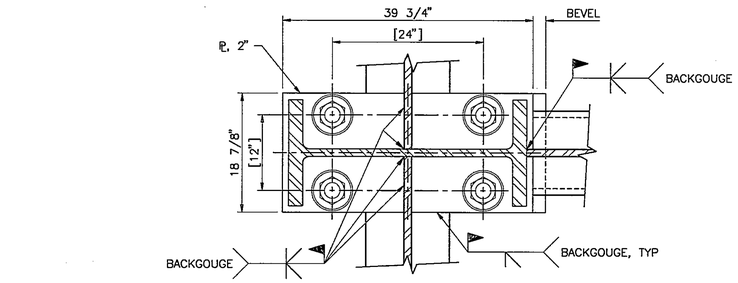

SECTION A (S10|S10)
SCALE: 1" = 1'-0"

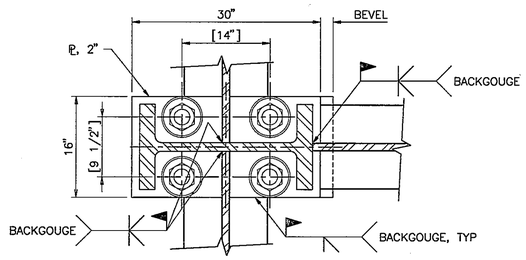

SECTION B (S10|S10)
SCALE: 1" = 1'-0"

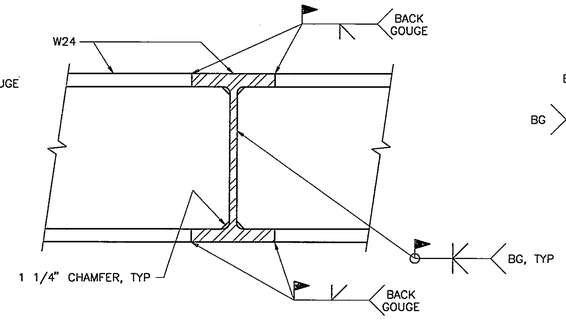

SECTION C (S2|S10)
SCALE: 1" = 1'-0"
(TYPICAL)

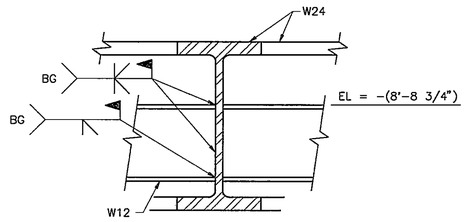

SECTION D (S2|S10)
SCALE: 1" = 1'-0"
(TYPICAL)

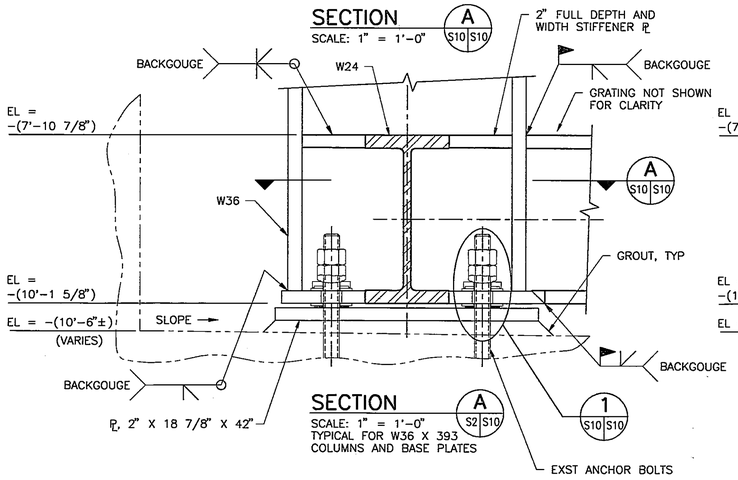

SECTION A (S2|S10)
SCALE: 1" = 1'-0"
TYPICAL FOR W36 X 393
COLUMNS AND BASE PLATES

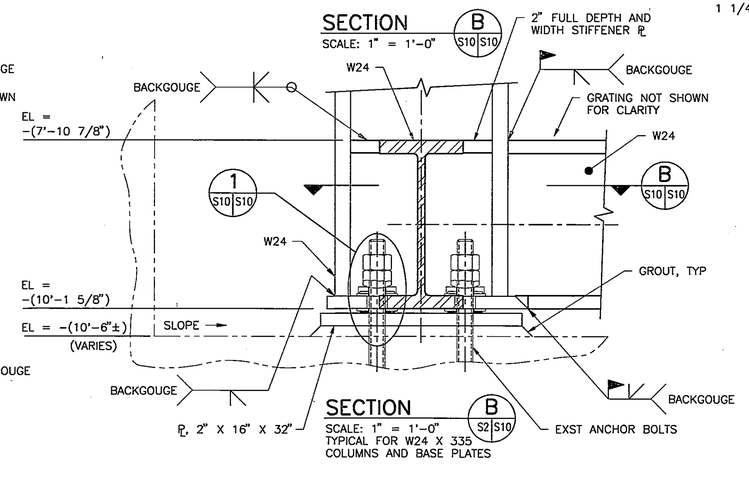

SECTION B (S2|S10)
SCALE: 1" = 1'-0"
TYPICAL FOR W24 X 335
COLUMNS AND BASE PLATES

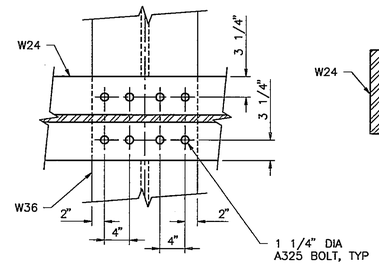

SECTION D (S10|S10)
SCALE: 1" = 1'-0"

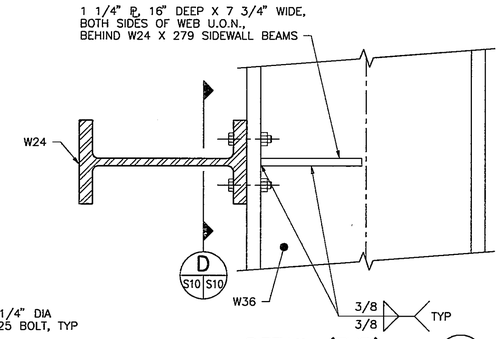

DETAIL (TYP) 1 (S4|S5|S10)
SCALE: 1" = 1'-0"
PP AND WT'S NOT SHOWN
FOR DETAIL 1/S5/S10
(TYPICAL)

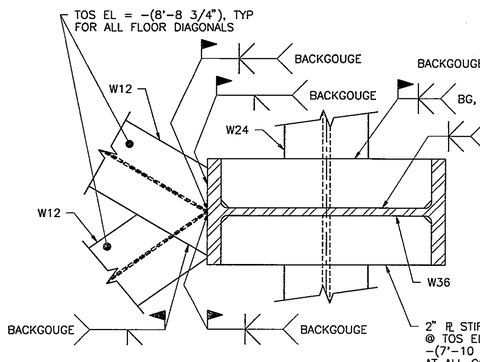

DETAIL 1
SCALE: 1" = 1'-0"
(TYPICAL)

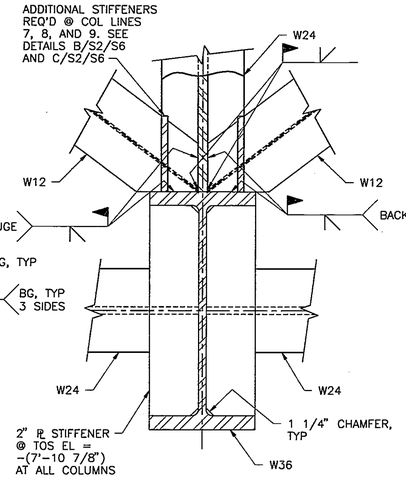

DETAIL 2 (S2|S10)
SCALE: 1" = 1'-0"
(TYPICAL)

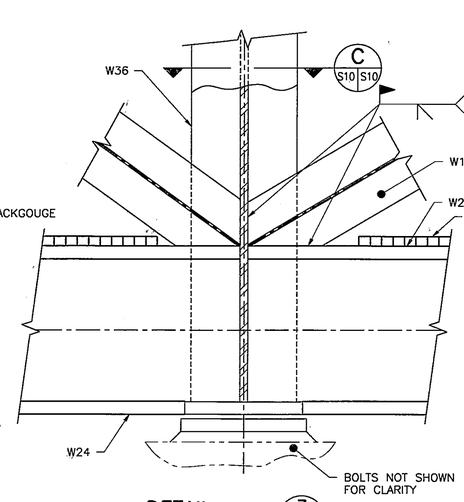

DETAIL 3 (S4|S10)
SCALE: 1" = 1'-0"
(TYPICAL)

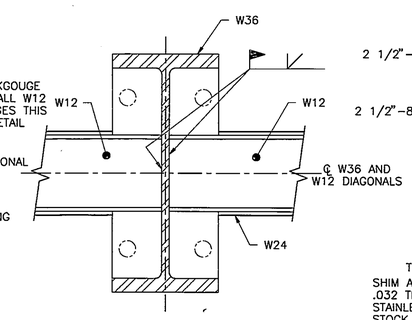

SECTION C (S10|S10)
SCALE: 1" = 1'-0"

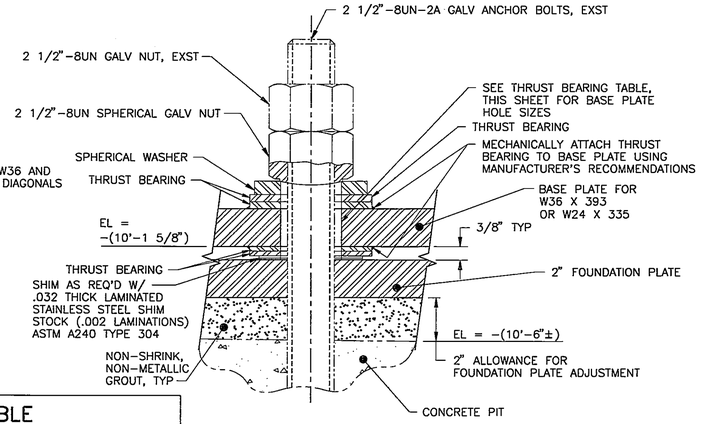

TYPICAL ANCHOR BOLT DETAIL 1 (S10|S10)
SCALE: 3" = 1'-0"
THRUST BEARINGS SHALL BE .120"±.001" THK,
3 1/4" ID X 5 1/2" OD, GARLOCK "DU" OR EQUAL.
GARLOCK BEARINGS INC, THOROFARE, NJ
NOTE: ANCHOR BOLTS AND HEX NUTS ARE EXISTING.
PROVIDE GALVANIZED SPHERICAL NUTS, WASHERS,
AND THRUST BEARINGS AS DETAILED.

FILE
JUN 2 1995

THRUST BEARING TABLE

LOCATION	THRUST BEARING	HOLE SIZE IN BASE PLATE	TORQUE
5J, 5K, 5L	NONE SUBSTITUTE HEAVY DUTY OVERSIZE WASHERS	(2 3/4")	2000 FT/LBS
N5 THRU N11	YES	SLOTTED HOLES PARALLEL TO COLUMN LINE N (3 1/4" X 2 5/8")	25 TO 30 FT/LBS
ALL OTHERS	YES	(3 1/4")	25 TO 30 FT/LBS

NOTE: STANDARD OVERSIZE HOLES FOR ANCHOR BOLTS PER AISC MANUAL OF STEEL CONSTRUCTION (ASD) 9TH EDITION SHALL NOT BE USED. SIZES LISTED ABOVE SHALL BE REQUIRED.

FOR DRAWING INDEX, LEGEND AND ABBREVIATIONS, SEE DRAWING 260427

REVISIONS

DATE	LTR	FREQ	DESCRIPTION	BY	CHECK	APPD

REVISIONS

DATE	LTR	FREQ	DESCRIPTION	BY	CHECK	APPD

Sverdrup
TECHNOLOGY INC.
LANGLEY DIVISION

WORK ORDER NO. RD08130A92/1118

APPROVALS	DATE
DRAFT.	5/15/95
ENG.	5/15/95
CHECK.	5/15/95
PROJ. ENG.	5/15/95
SUPVR.	5/15/95

APPROVALS

NAME	ORGANIZATION	DATE		DATE
J.W. Mayhew	FSED	5/15/95	DRAWN	
			DESIGNED	
			CHECKED	5/15/95
			APPROVED	5/15/95
			TECH. PROJ. ENG.	5/15/95
			RES. PROJ. ENG.	

TOLERANCE ON DIMENSIONS UNLESS SHOWN OTHERWISE — ANGULAR ± X.XX (2 DECIMAL PLACES) ± .02, X.XXX (3 DECIMAL PLACES) ± .005

SURFACE FINISH IN MICROINCHES RMS UNLESS SHOWN OTHERWISE ✓

NATIONAL AERONAUTICS & SPACE ADMINISTRATION
LANGLEY RESEARCH CENTER
HAMPTON, VIRGINIA 23681-0001

PROJECT TITLE: COLTS
REACTING PIT STEEL

DRAWING TITLE: SECTIONS AND DETAILS, SHEET 1

BUILDING NO. 1256 | SIZE D | DRAWING NO. 260436 | LATEST REV.

SHEET NO. S10

PBV

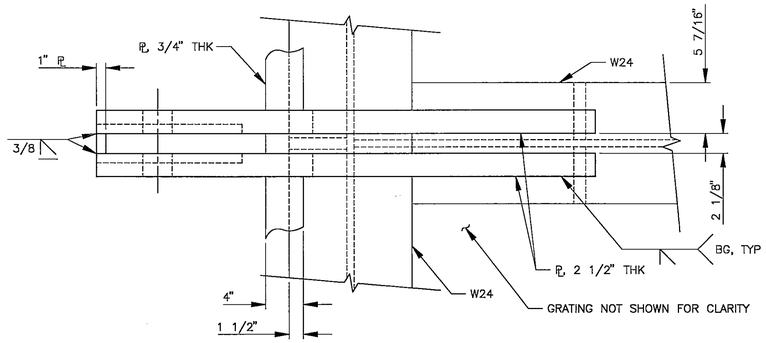

SECTION A (S9|S9)
SCALE: 1 1/2" = 1'-0"

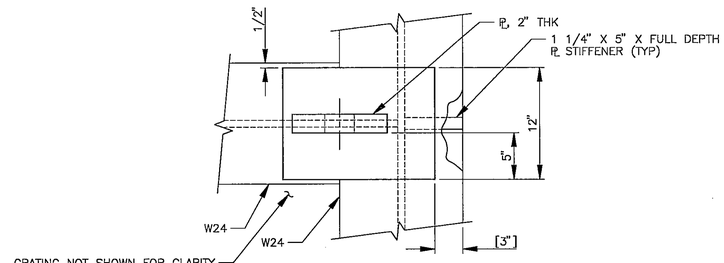

SECTION B (S9|S9)
SCALE: 1 1/2" = 1'-0"

NOTES:

1. GRATING SHALL BE HOT DIPPED GALVANIZED STEEL IKG/BORDEN WB OR EQUAL. BEARING BARS SHALL BE 1"x 1/8" SPACED AT 1 13/16" O.C. GRATING SHALL BE ABLE TO SAFELY SUSTAIN A UNIFORMLY DISTRIBUTED LIVE LOAD OF 300 PSF ON A 3'-0" SINGLE SPAN. ALL EDGES SHALL BE BANDED INCLUDING CUTOUTS. GRATING SHALL BE INSTALLED ON FRAMING USING HOT DIPPED GALVANIZED SADDLE CLIPS AND BOLTS WITH SPACING OF CLIPS BASED ON MANUFACTURER'S RECOMMENDATIONS. GRATING SHALL NOT BE ATTACHED WITH WELDS.

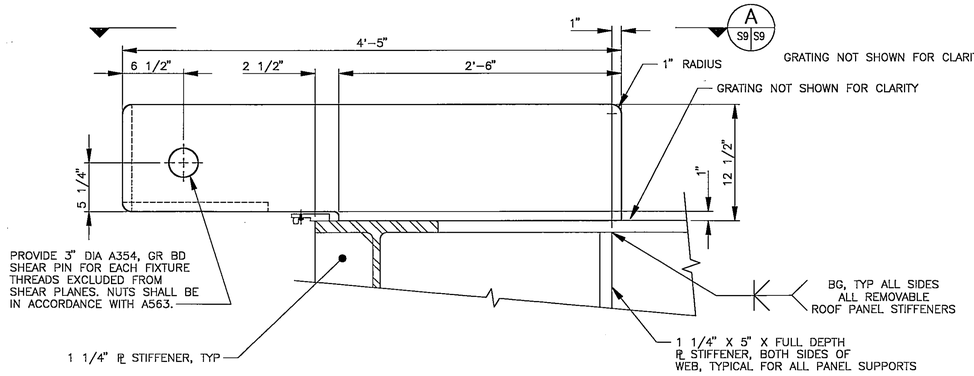

SECTION – INTERMEDIATE PANEL SUPPORT A (S8|S9)
SCALE: 1 1/2" = 1'-0"

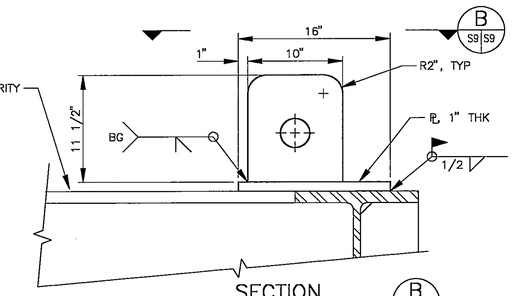

SECTION B (S8|S9)
SCALE: 1 1/2" = 1'-0"

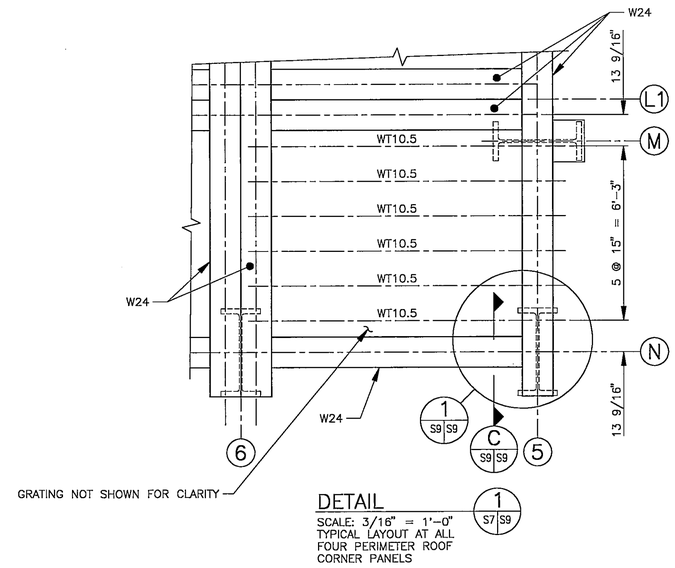

DETAIL 1 (S7|S9)
SCALE: 3/16" = 1'-0"
TYPICAL LAYOUT AT ALL FOUR PERIMETER ROOF CORNER PANELS

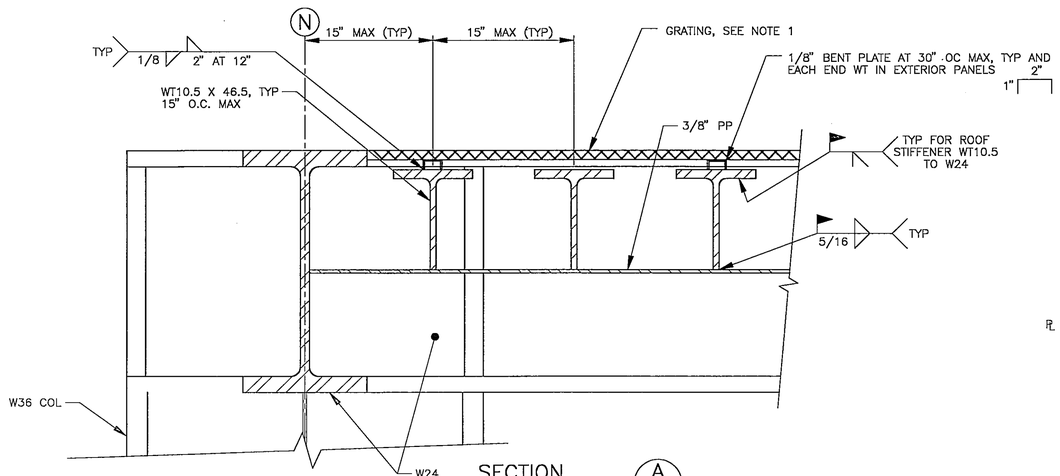

SECTION A (S7|S9)
SCALE: 1 1/2" = 1'-0"

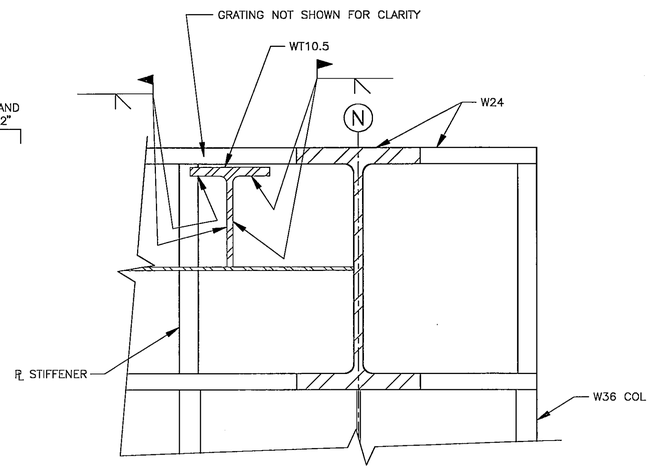

SECTION C (S9|S9)
SCALE: 1 1/2" = 1'-0"

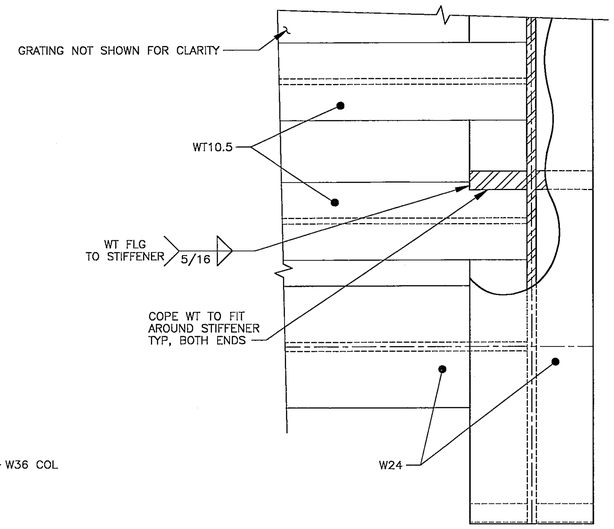

DETAIL 1 (S9|S9)
SCALE: 1 1/2" = 1'-0"

FILE
JUN 2 1995

REVISIONS															
DATE	LTR	FREQ	DESCRIPTION	BY	CHECK	APPD	DATE	LTR	FREQ	DESCRIPTION	BY	CHECK	APPD

Sverdrup
TECHNOLOGY INC.
LANGLEY DIVISION

WORK ORDER NO. RD08130A92/1118

APPROVALS	DATE
DRAFT. P. MUIR	05/15/95
ENG. E. K. SVENDSEN	05/15/95
CHECK J. F. DOUGHERTY	05/15/95
PROJ. ENG. E. K. SVENDSEN	05/15/95
SUPV'N. D. O'LOUGHLIN	05/15/95

APPROVALS				
NAME	ORGANIZATION	DATE		DATE
	ESED	5/15/95	DRAWN	
			DESIGNED	
			CHECKED	5/15/95
			APPROVED	5/15/95
			TECH. PROJ. ENG.	5/15/95
			RES. PROJ. ENG.	

TOLERANCE ON DIMENSIONS UNLESS SHOWN OTHERWISE — ANGULAR ± X.XX (2 DECIMAL PLACES) ±.02, X.XXX (3 DECIMAL PLACES) ±.005 — SURFACE FINISH IN MICROINCHES RMS UNLESS SHOWN OTHERWISE

FOR DRAWING INDEX, LEGEND AND ABBREVIATIONS, SEE DRAWING 260427

NATIONAL AERONAUTICS & SPACE ADMINISTRATION
LANGLEY RESEARCH CENTER
HAMPTON, VIRGINIA 23681-0001

PROJECT TITLE: COLTS REACTING PIT STEEL

DRAWING TITLE: ROOF DETAILS

BUILDING NO. 1256 | SIZE D | DRAWING NO. 260435 | LATEST REV.

SHEET NO. S9

PBV

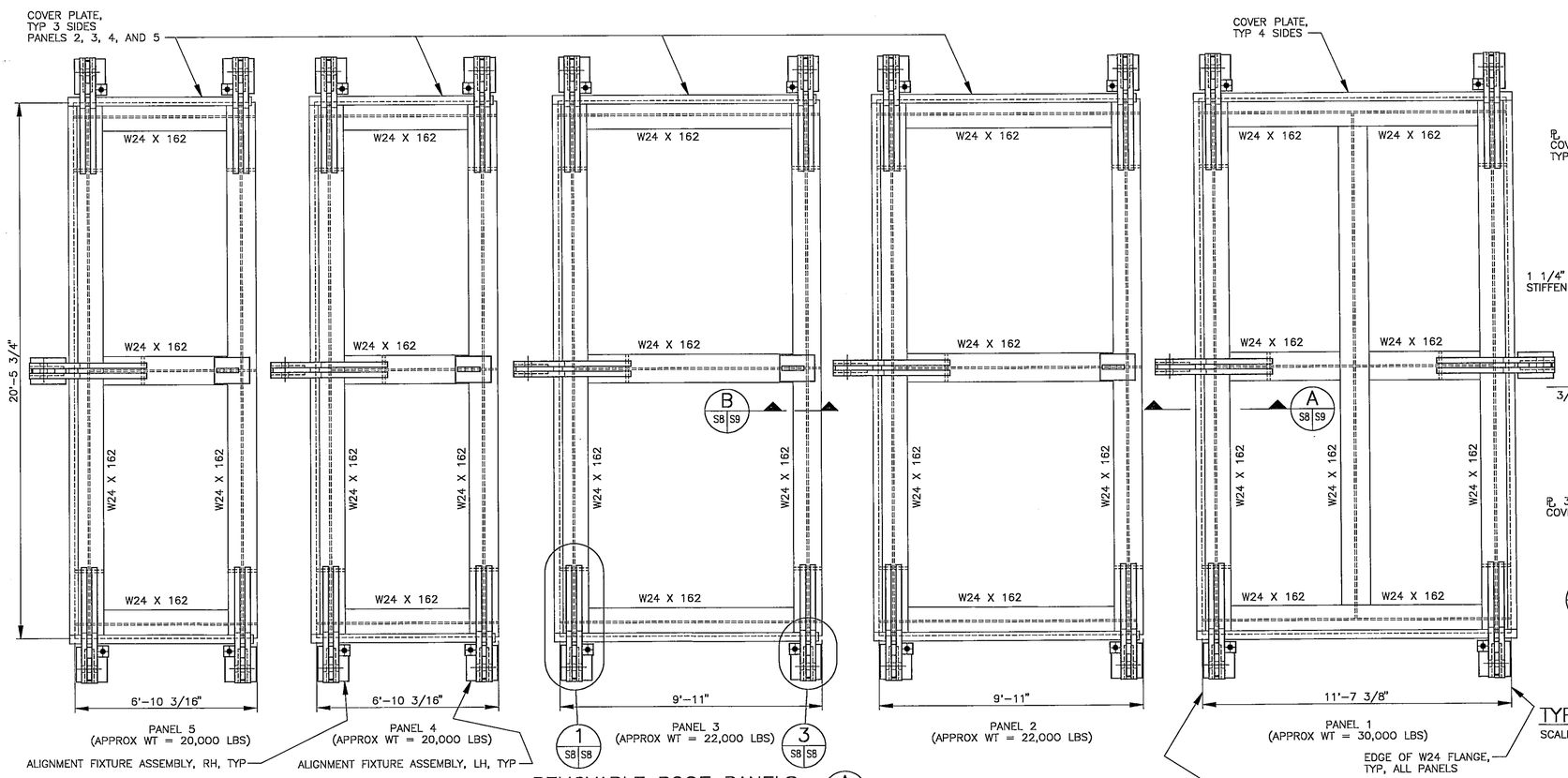

REMOVABLE ROOF PANELS (A S7 S8)

SCALE: 3/8" = 1'-0"
ALL W24 X 162'S SHALL BE ASTM A572, GRADE 60. WT10.5'S AND GRATING NOT SHOWN FOR CLARITY. PROVIDE 1" LAP WITH FLANGES OF W24 AROUND SUPPORT ATTACHMENTS, TYPICAL FOR ALL REMOVABLE ROOF PANELS. PAINT "PANEL #" ON EACH PANEL IN 6" HIGH LETTERING, SAFETY YELLOW IN COLOR.

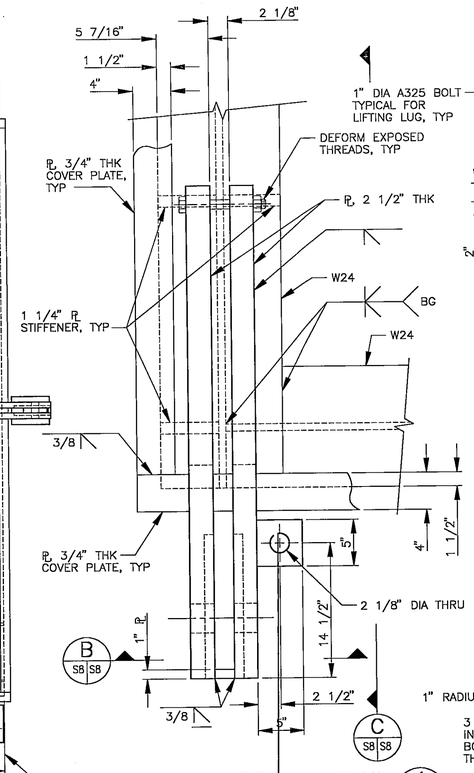

TYP RH PANEL SUPPORT DETAIL (1 S8 S8)

SCALE: 1 1/2" = 1'-0"

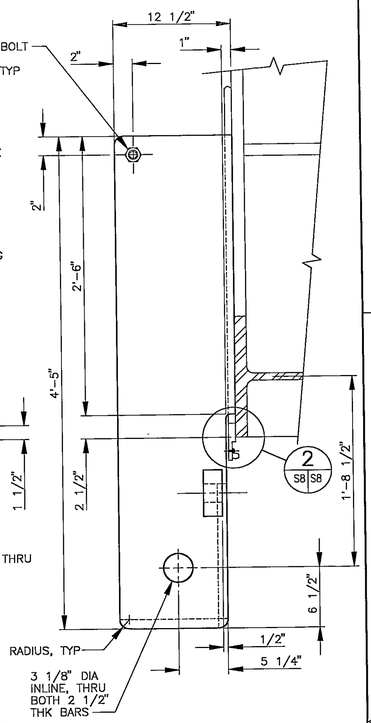

SECTION (C S8 S8)

SCALE: 1 1/2" = 1'-0"

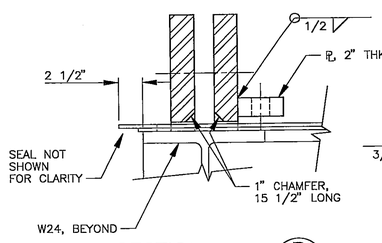

SECTION (B S8 S8)

SCALE: 1 1/2" = 1'-0"

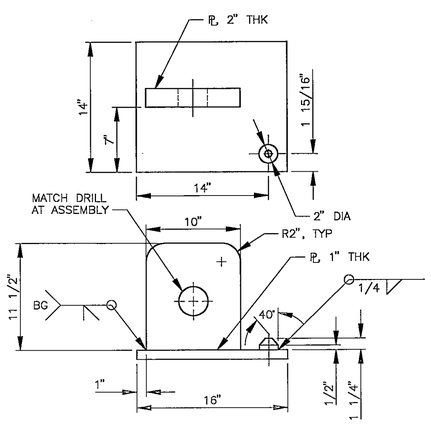

ALIGNMENT FIXTURE ASSEMBLY, RH (SHOWN)
ALIGNMENT FIXTURE ASSEMBLY, LH (OPPOSITE)

SCALE: 1 1/2" = 1'-0"

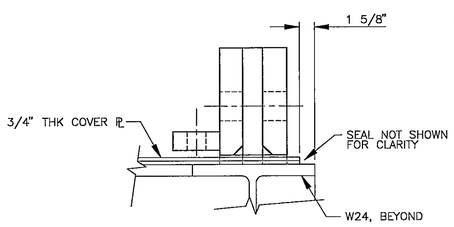

SECTION (A S8 S8)

SCALE: 1 1/2" = 1'-0"
NOTE: SHOWN WITHOUT ALIGNMENT FIXTURE

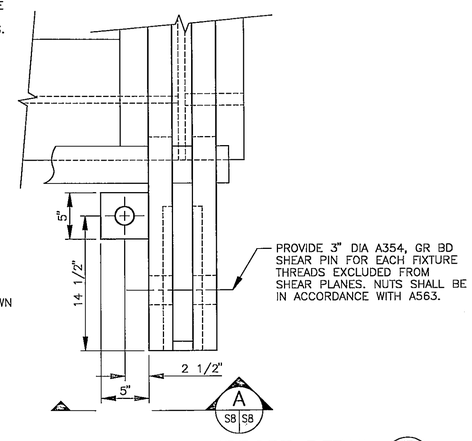

TYP LH PANEL SUPPORT DETAIL (3 S8 S8)

SCALE: 1 1/2" = 1'-0"
NOTE: SHOWN WITHOUT ALIGNMENT FIXTURE

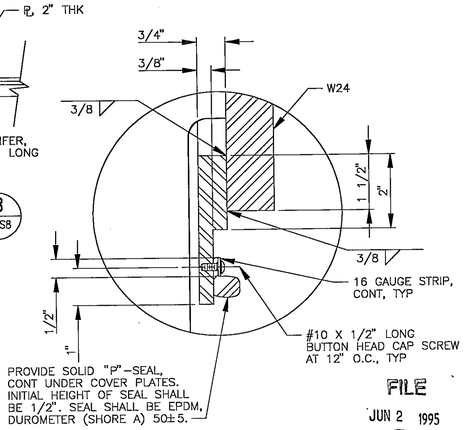

FILE
JUN 2 1995

3/4" THK COVER PLATE DETAIL (2 S8 S8)

SCALE: 1/2" = 1"

REVISIONS															
DATE	LTR	FREQ	DESCRIPTION	BY	CHECK	APPD	DATE	LTR	FREQ	DESCRIPTION	BY	CHECK	APPD

Swerdrup
TECHNOLOGY INC.
LANGLEY DIVISION

WORK ORDER NO. RD08130A92/1118

APPROVALS	DATE
DRAFT. P. MUIR	05/15/95
ENG. E. K. SVENDSEN	05/15/95
CHECK J. F. DOUGHERTY	05/15/95
PROJ. ENG. E. K. SVENDSEN	05/15/95
SUPV'N. D. O'LOUGHLIN	05/15/95

APPROVALS			
NAME	ORGANIZATION	DATE	
	ESED	5/15/95	DRAWN
			DESIGNED
			CHECKED 5/15/95
			APPROVED 5/15/95
			TECH. PROJ. ENG. 5/15/95
			RES. PROJ. ENG.

TOLERANCE ON DIMENSIONS UNLESS SHOWN OTHERWISE: ANGULAR ± ; X.XX (2 DECIMAL PLACES) ±.02 ; X.XXX (3 DECIMAL PLACES) ±.005
SURFACE FINISH IN MICRONCHES RMS UNLESS SHOWN OTHERWISE √

FOR DRAWING INDEX, LEGEND AND ABBREVIATIONS, SEE DRAWING 260427

NATIONAL AERONAUTICS & SPACE ADMINISTRATION
LANGLEY RESEARCH CENTER
HAMPTON, VIRGINIA 23681-0001

PROJECT TITLE: COLTS REACTING PIT STEEL
DRAWING TITLE: REMOVABLE ROOF PANELS

BUILDING NO. 1256 | SIZE D | DRAWING NO. 260434 | LATEST REV.
SHEET NO. S8

PBV

NOTES:

1. THE CONTRACTOR SHALL SUBMIT AN INSTALLATION AND FINAL ALIGNMENT PROCEDURE FOR LIFT-OUT PANELS FOR APPROVAL 30 DAYS PRIOR TO COMMENCING WORK ON PANELS.
2. REMOVAL OF PANELS SHALL ALWAYS BE IN SEQUENTIAL ORDER. i.e. REMOVE PANEL 1 BEFORE REMOVAL OF PANEL 2, REMOVE PANELS 1 AND 2 BEFORE REMOVING PANEL 3, REMOVE PANELS 1, 2, AND 3 BEFORE REMOVING PANEL 4, REMOVE PANELS 1, 2, 3, AND 4 BEFORE REMOVING PANEL 5.
3. GRATING SHALL BE HOT DIPPED GALVANIZED STEEL IKG/BORDEN WB OR EQUAL. BEARING BARS SHALL BE 1 1/2"x 1/8" SPACED AT 1 13/16" O.C. GRATING SHALL BE ABLE TO SAFELY SUSTAIN A UNIFORMLY DISTRIBUTED LIVE LOAD OF 300 PSF ON A 4'-6" SINGLE SPAN. ALL EDGES SHALL BE BANDED INCLUDING CUTOUTS. GRATING SHALL BE INSTALLED ON FRAMING USING HOT DIPPED GALVANIZED SADDLE CLIPS AND BOLTS WITH SPACING OF CLIPS BASED ON MANUFACTURER'S RECOMMENDATIONS. GRATING SHALL NOT BE ATTACHED WITH WELDS.

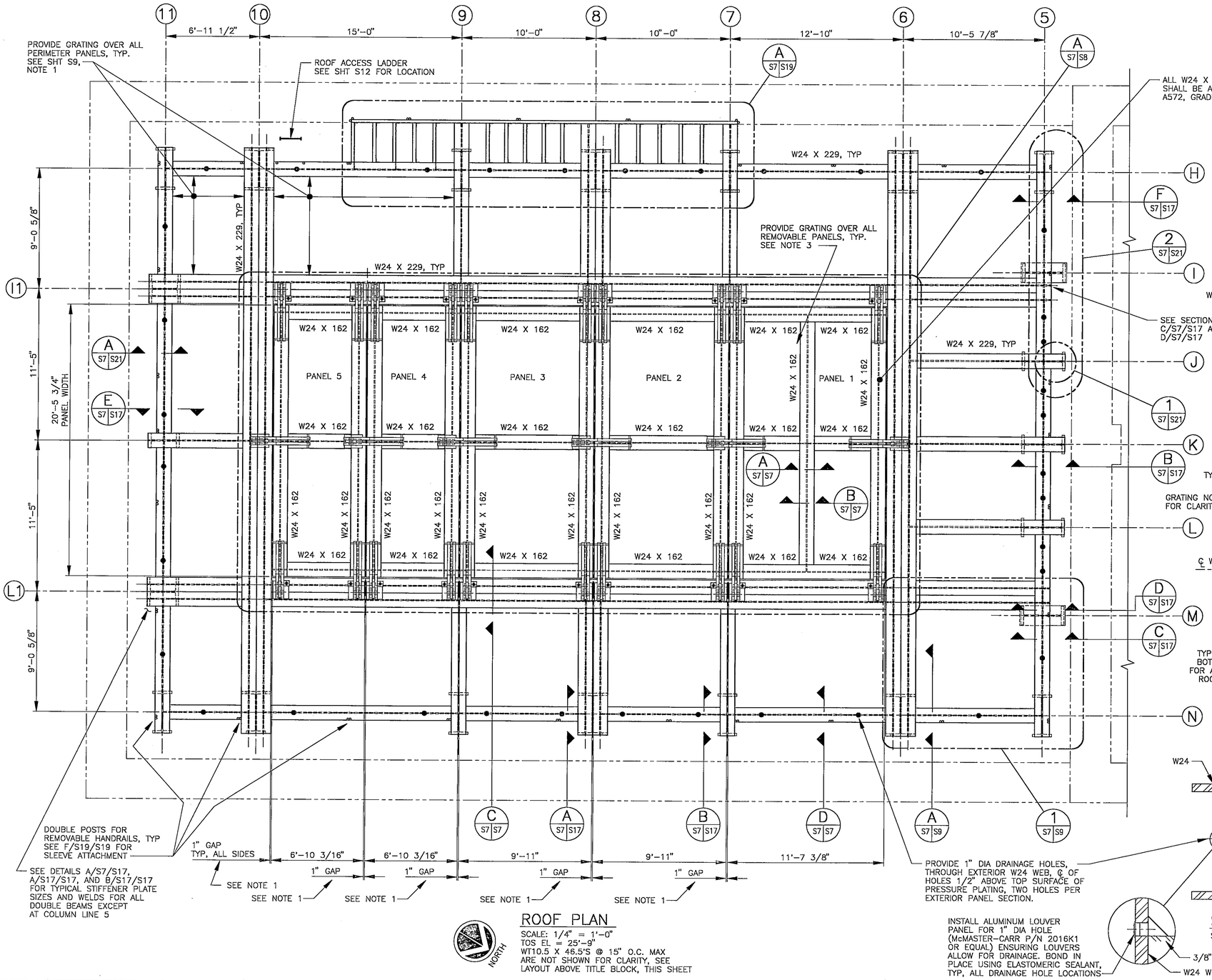

ROOF PLAN
SCALE: 1/4" = 1'-0"
TOS EL = 25'-9"
WT10.5 X 46.5'S @ 15" O.C. MAX ARE NOT SHOWN FOR CLARITY, SEE LAYOUT ABOVE TITLE BLOCK, THIS SHEET

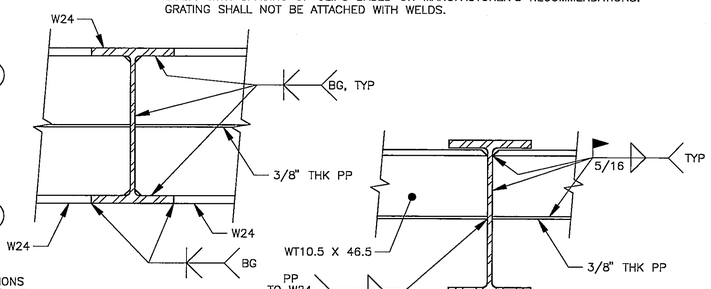

SECTION A S7|S7
SCALE: 1" = 1'-0"

SECTION B S7|S7
SCALE: 1" = 1'-0"

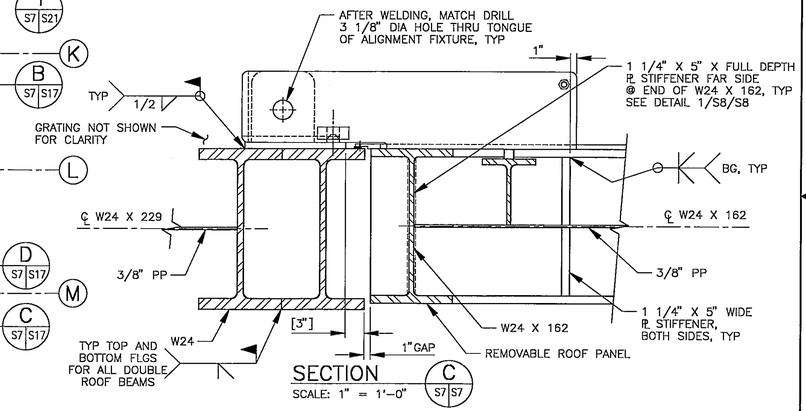

SECTION C S7|S7
SCALE: 1" = 1'-0"

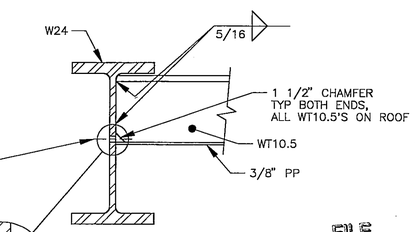

SECTION D S7|S7
SCALE: 1" = 1'-0"

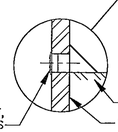

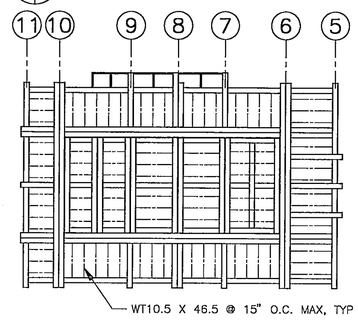

DIRECTION OF WT 10.5 x 46.5'S
SCALE: NONE

FILE
JUN 2 1995

REVISIONS															
DATE	LTR	FREQ	DESCRIPTION	BY	CHECK	APPD	DATE	LTR	FREQ	DESCRIPTION	BY	CHECK	APPD

Sverdrup TECHNOLOGY INC.
LANGLEY DIVISION

WORK ORDER NO. RD08130A92/1118	
APPROVALS	DATE
DRAFT. P. MUIR	05/15/95
ENG. E. K. SVENDSEN	05/15/95
CHECK J. F. DOUGHERTY	05/15/95
PROJ. ENG. E. K. SVENDSEN	05/15/95
SUPV'N. D. O'LOUGHLIN	05/15/95

APPROVALS				
NAME	ORGANIZATION	DATE		DATE
Cherry Kamus	FSED	5/15/95	DRAWN	
			DESIGNED	
			CHECKED	5/15/95
			APPROVED	5/15/95
			TECH. PROJ. ENG.	5/15/95
			RES. PROJ. ENG.	

TOLERANCE ON DIMENSIONS UNLESS SHOWN OTHERWISE: ANGULAR ±; X.XX (2 DECIMAL PLACES) ±.02; X.XXX (3 DECIMAL PLACES) ±.005
SURFACE FINISH IN MICROINCHES RMS UNLESS SHOWN OTHERWISE

FOR DRAWING INDEX, LEGEND AND ABBREVIATIONS, SEE DRAWING 260427

NATIONAL AERONAUTICS & SPACE ADMINISTRATION
LANGLEY RESEARCH CENTER
HAMPTON, VIRGINIA 23681-0001

PROJECT TITLE: COLTS REACTING PIT STEEL
DRAWING TITLE: ROOF PLAN

BUILDING NO.	SIZE	DRAWING NO.	LATEST REV.
1256	D	260433	

SHEET NO. S7

PBV

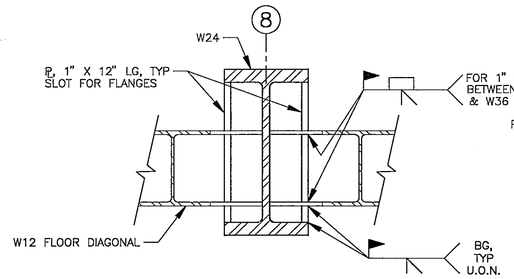

SECTION B
SCALE: 1" = 1'-0"
TYPICAL ON BOTH SIDES
OF PIT AT COLUMN LINE 8
SEE 2/S2/S10

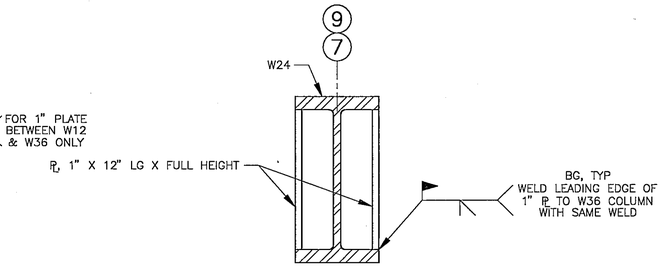

SECTION C
SCALE: 1" = 1'-0"
TYP ON BOTH SIDES
OF PIT AT COLUMN LINES 7 AND 9

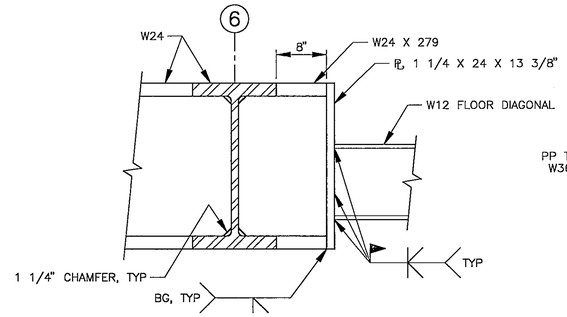

SECTION D
SCALE: 1" = 1'-0"

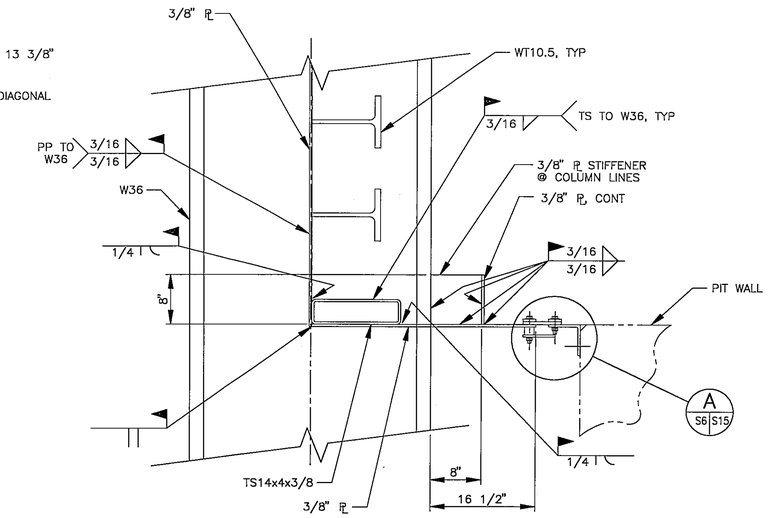

DETAIL 2
SCALE: 1" = 1'-0"

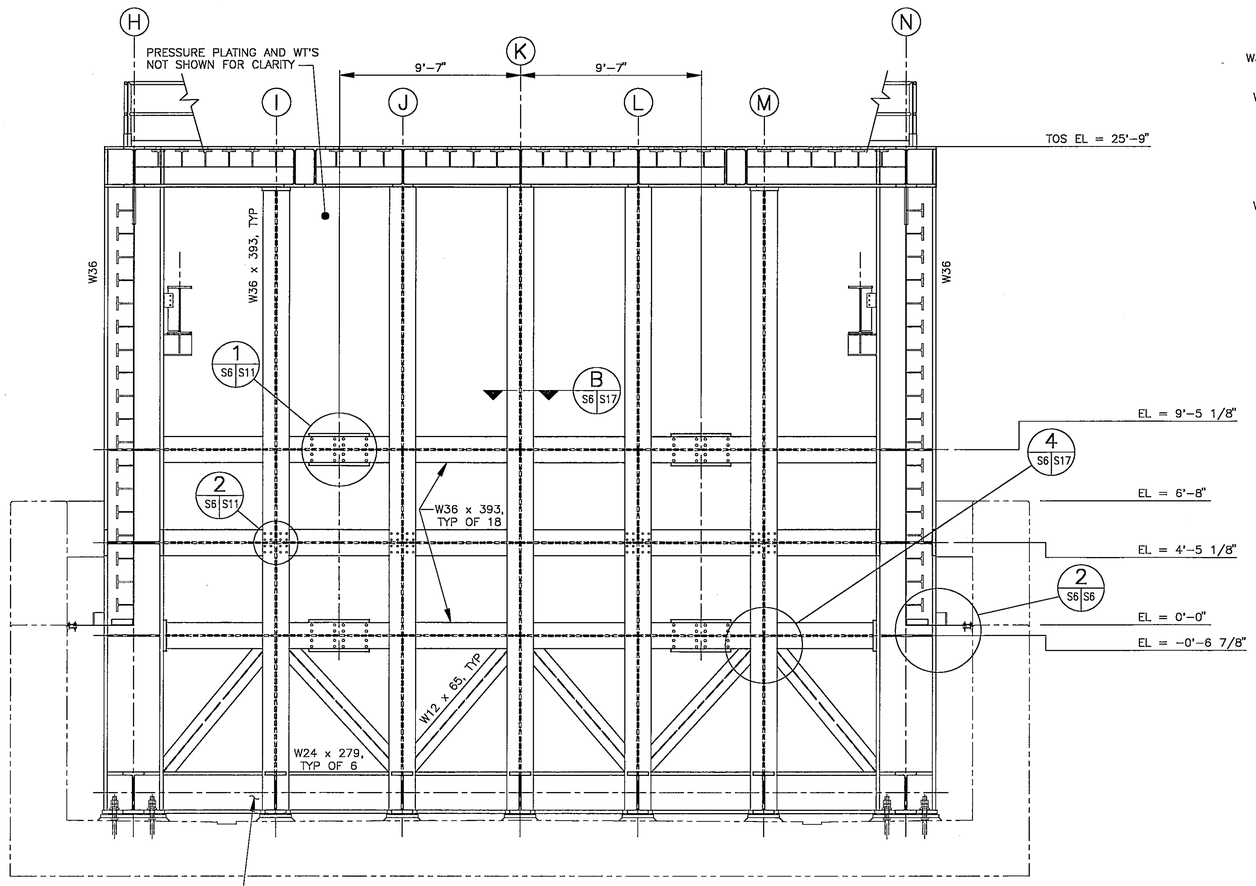

NORTH LOADED ENDWALL INSIDE ELEVATION A
SCALE: 1/4" = 1'-0"

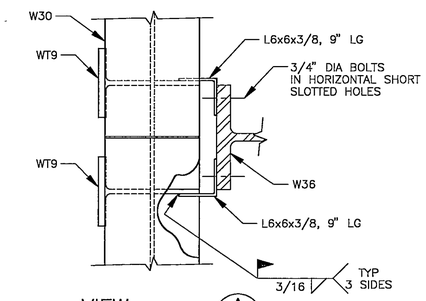

VIEW A
SCALE: 1"= 1'-0"

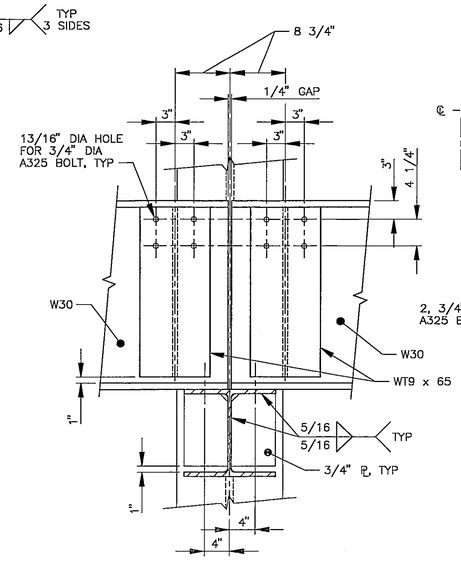

VIEW C
SCALE: 1"= 1'-0"

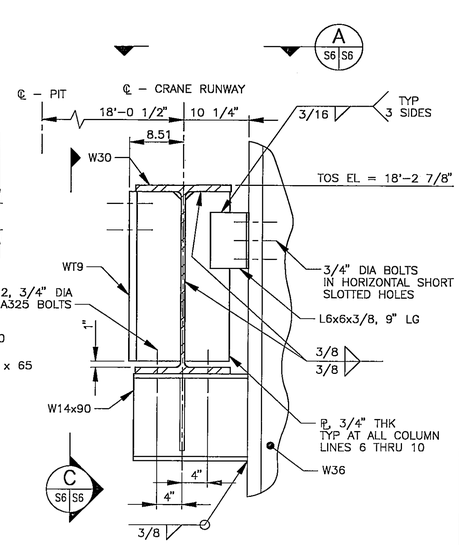

SECTION C
SCALE: 1"= 1'-0"
TYP CRANE RUNWAY SUPPORT

FILE
JUN 2 1995

REVISIONS															
DATE	LTR	FREQ	DESCRIPTION	BY	CHECK	APPD	DATE	LTR	FREQ	DESCRIPTION	BY	CHECK	APPD

Sverdrup
TECHNOLOGY INC.
LANGLEY DIVISION

WORK ORDER NO. RD08130A92/1118	
APPROVALS	DATE
DRAFT. P. MUIR	05/15/95
ENG. E. K. SVENDSEN	05/15/95
CHECK J. F. DOUGHERTY	05/15/95
PROJ. ENG. E. K. SVENDSEN	05/15/95
SUPV'N. D. O'LOUGHLIN	05/15/95

APPROVALS				
NAME	ORGANIZATION	DATE		DATE
	FSED	5/15/95	DRAWN	
			DESIGNED	
			CHECKED	5/15/95
			APPROVED	5/16/95
			TECH. PROJ. ENG.	5/16/95
			RES. PROJ. ENG.	

TOLERANCE ON DIMENSIONS UNLESS SHOWN OTHERWISE — ANGULAR ± X.XX (2 DECIMAL PLACES) ±.02, X.XXX (3 DECIMAL PLACES) ±.005
SURFACE FINISH IN MICROINCHES RMS UNLESS SHOWN OTHERWISE

FOR DRAWING INDEX, LEGEND AND ABBREVIATIONS, SEE DRAWING 260427

NATIONAL AERONAUTICS & SPACE ADMINISTRATION
LANGLEY RESEARCH CENTER
HAMPTON, VIRGINIA 23681-0001

PROJECT TITLE: COLTS REACTING PIT STEEL

DRAWING TITLE: LOADED ENDWALL ELEVATION

BUILDING NO. 1256 | SIZE D | DRAWING NO. 260432 | LATEST REV.

SHEET NO. S6

PBV

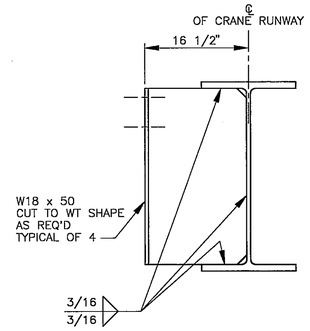

DETAIL 1 (S5|S5)
SCALE: 1" = 1'-0"

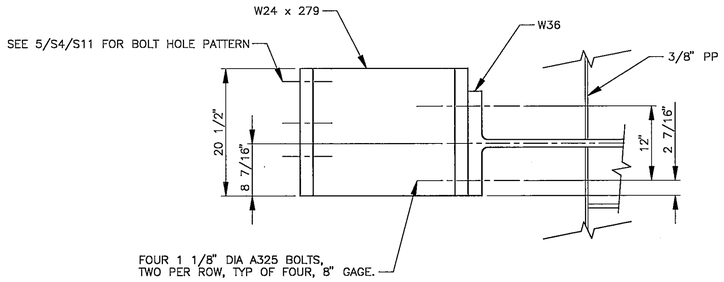

DETAIL 2 (S5|S5)
SCALE: 1" = 1'-0"

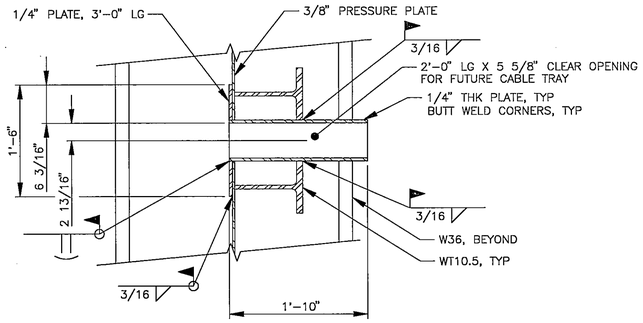

CABLE TRAY SECTION B (S5|S5)
SCALE: 1" = 1'-0"

NOTES:

1. BOLT PATTERNS FOR THE UNLOADED SIDEWALL SHALL MIRROR AROUND A VERTICAL PLANE AT COLUMN LINE K THE BOLT PATTERNS FOR THE LOADED SIDEWALL (SEE SHT S4 FOR BOLT PATTERN DETAILS).
2. SEE SHEET S4 FOR TYPICAL CONNECTION DETAILS FOR THE UNLOADED SIDEWALL WHICH SHALL BE THE SAME AS FOR THE LOADED SIDEWALL, UNLESS OTHERWISE NOTED.

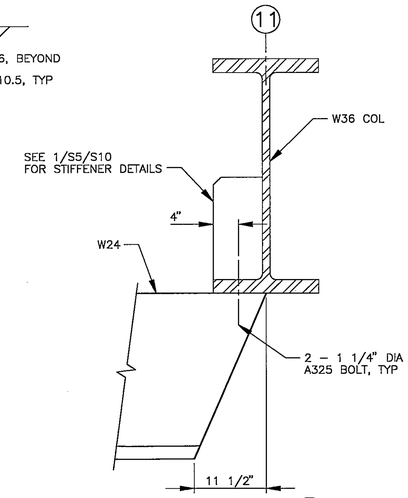

SECTION C (S4|S5)
SCALE: 1" = 1'-0"

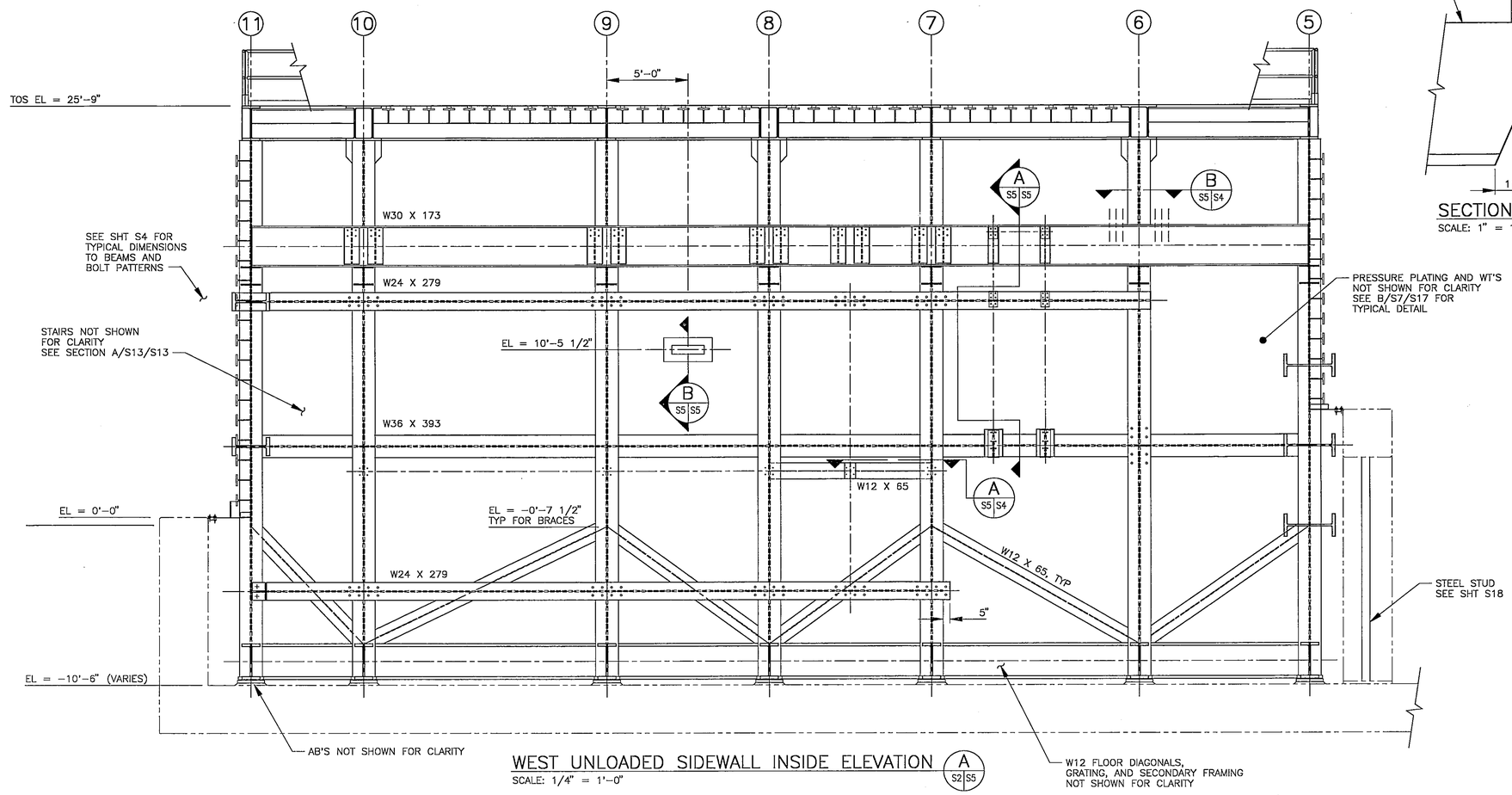

WEST UNLOADED SIDEWALL INSIDE ELEVATION A (S2|S5)
SCALE: 1/4" = 1'-0"

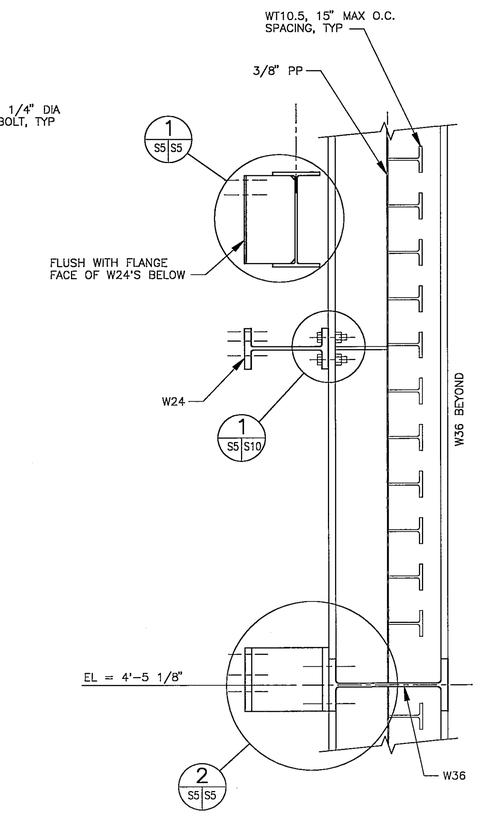

SECTION A (S4|S5|S5)
SCALE: 1/2" = 1'-0"
TYPICAL AT 4 LOCATIONS
FOR AXIAL COUNTERBALANCE
TWO EACH SIDEWALL

FILE
JUN 2 1995

REVISIONS															
DATE	LTR	FREQ	DESCRIPTION	BY	CHECK	APPD	DATE	LTR	FREQ	DESCRIPTION	BY	CHECK	APPD

Sverdrup TECHNOLOGY INC.
LANGLEY DIVISION

WORK ORDER NO. RD08130A92/1118

APPROVALS	DATE
DRAFT. P. MUIR	05/15/95
ENG. E. K. SVENDSEN	05/15/95
CHECK J. F. DOUGHERTY	05/15/95
PROJ. ENG. E. K. SVENDSEN	05/15/95
SUPV'N. D. O'LOUGHLIN	05/15/95

APPROVALS	NAME	ORGANIZATION	DATE
DRAWN		FSED	5/15/95
DESIGNED			
CHECKED			5/15/95
APPROVED			5/15/95
TECH. PROJ. ENG.			5/15/95
RES. PROJ. ENG.			

TOLERANCE ON DIMENSIONS UNLESS SHOWN OTHERWISE: ANGULAR ±; X.XX (2 DECIMAL PLACES) ±.02; X.XXX (3 DECIMAL PLACES) ±.005
SURFACE FINISH IN MICROINCHES RMS UNLESS SHOWN OTHERWISE

FOR DRAWING INDEX, LEGEND AND ABBREVIATIONS, SEE DRAWING 260427

NATIONAL AERONAUTICS & SPACE ADMINISTRATION
LANGLEY RESEARCH CENTER
HAMPTON, VIRGINIA 23681-0001

PROJECT TITLE: COLTS REACTING PIT STEEL
DRAWING TITLE: UNLOADED SIDEWALL ELEVATION

BUILDING NO. 1256 | SIZE D | DRAWING NO. 260431 | LATEST REV.
SHEET NO. S5

PBV

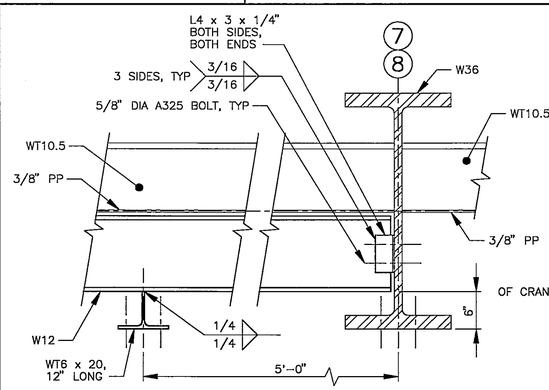

SECTION A
SCALE: 1" = 1'-0"

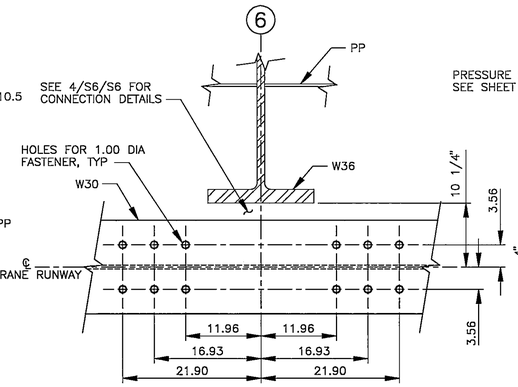

SECTION B
SCALE: 1" = 1'-0"

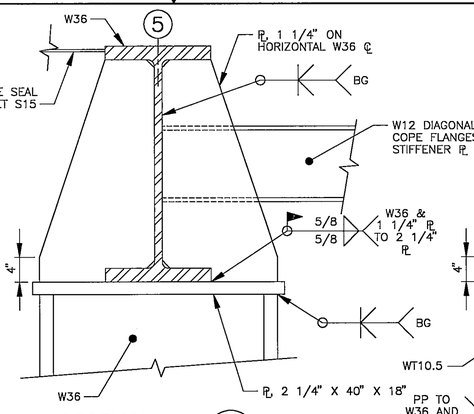

SECTION C
SCALE: 1" = 1'-0"
TYP BOTH ENDS

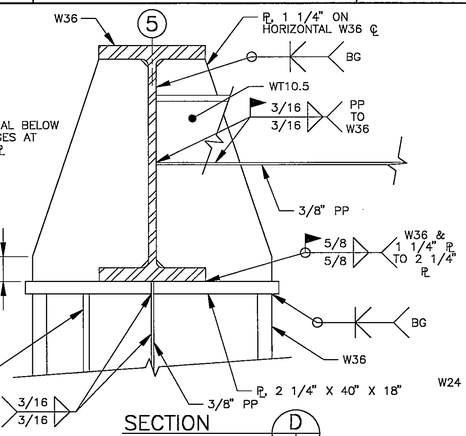

SECTION D
SCALE: 1" = 1'-0"
TYP BOTH ENDS

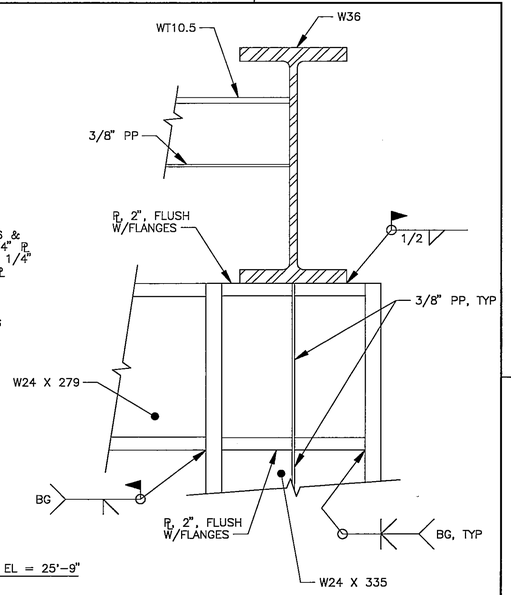

SECTION E
SCALE: 1" = 1'-0"

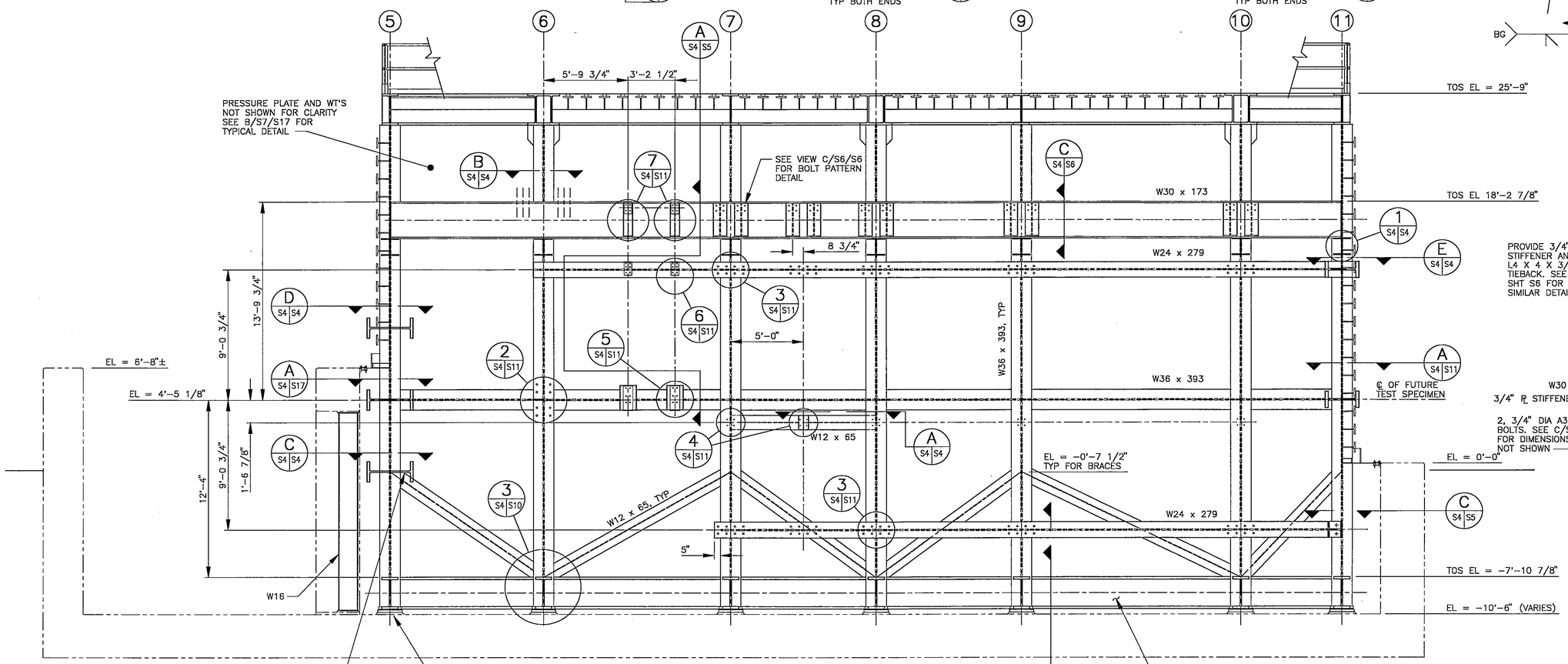

EAST LOADED SIDEWALL INSIDE ELEVATION
SCALE: 1/4" = 1'-0"

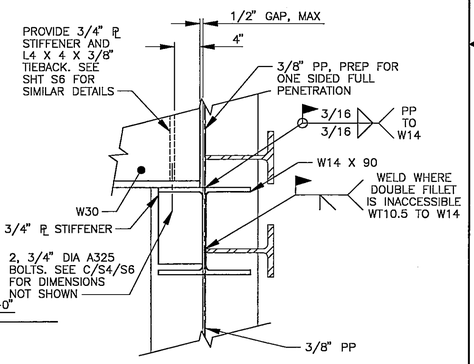

DETAIL 1
SCALE: 1" = 1'-0"
SEE SECTION C/S4/S6 FOR DETAILS NOT SHOWN.
TYP END SUPPORT FOR CRANE RUNWAY. SEE C/S4/S6 FOR INTERMEDIATE SUPPORTS.

FILE
JUN 2 1995

REVISIONS															
DATE	LTR	FREQ	DESCRIPTION	BY	CHECK	APPD	DATE	LTR	FREQ	DESCRIPTION	BY	CHECK	APPD

Sverdrup
TECHNOLOGY INC.
LANGLEY DIVISION

WORK ORDER NO.	RD08130A92/1118
APPROVALS	DATE
DRAFT. P. MUIR	05/15/95
ENG. E. K. SVENDSEN	05/15/95
CHECK J. F. DOUGHERTY	05/15/95
PROJ. ENG. E. K. SVENDSEN	05/15/95
SUPV'N. D. O'LOUGHLIN	05/15/95

APPROVALS	NAME	ORGANIZATION	DATE
DRAWN	J. W. Maughan	FSED	5/15/95
DESIGNED			
CHECKED			5/15/95
APPROVED			5/15/95
TECH. PROJ. ENG.			5/15/95
RES. PROJ. ENG.			

TOLERANCE ON DIMENSIONS UNLESS SHOWN OTHERWISE — ANGULAR ± X.XX (2 DECIMAL PLACES) ±.02, X.XXX (3 DECIMAL PLACES) ±.005
SURFACE FINISH IN MICROINCHES RMS UNLESS SHOWN OTHERWISE

FOR DRAWING INDEX, LEGEND AND ABBREVIATIONS, SEE DRAWING 260427

NATIONAL AERONAUTICS & SPACE ADMINISTRATION
LANGLEY RESEARCH CENTER
HAMPTON, VIRGINIA 23681-0001

PROJECT TITLE: COLTS REACTING PIT STEEL

DRAWING TITLE: LOADED SIDEWALL ELEVATION

BUILDING NO. 1256 | SIZE D | DRAWING NO. 260430 | LATEST REV.

SHEET NO. S4

PBV

BASIS OF DESIGN

1. DESIGN LOADS:

ROOF LIVE LOAD @ EL 25'-9"	150 PSF
FLOOR LIVE LOAD @ EL -7'-10 7/8"	250 PSF
STAIR LIVE LOAD	80 PSF
BLAST LOAD	TRANSIENT PRESSURE CURVE FROM BATTELLE ANALYSIS. APPROX EQUIVALENT TO 40 PSI STATIC.

GENERAL STRUCTURAL NOTES:

1. THE CONTRACTOR SHALL VERIFY ALL DIMENSIONS AT THE JOB SITE PRIOR TO STARTING WORK, AND SHALL COORDINATE THE WORK OF ALL TRADES. THE STRUCTURAL DRAWINGS SHALL BE USED IN CONJUNCTION WITH THE CIVIL, ARCHITECTURAL, MECHANICAL, AND ELECTRICAL DRAWINGS. THE CONTRACTOR SHALL VERIFY THE REQUIRED WORK OF OTHER TRADES AS TO SLEEVES, INSERTS, HANGERS, ANCHORS, HOLES, OR SIMILAR ITEMS TO BE PROVIDED OR SET IN STRUCTURAL WORK.
2. UNDER NO CIRCUMSTANCES SHALL REPRODUCTION OF CONTRACT DRAWINGS BE USED AS SHOP DRAWINGS.
3. DESIGN, FABRICATION, AND ERECTION OF STRUCTURAL STEEL SHALL BE IN ACCORDANCE WITH THE LATEST EDITION OF THE A.I.S.C. MANUAL OF STEEL CONSTRUCTION. STRUCTURAL STEEL AND PLATE SHALL MEET A.S.T.M. STANDARD A572 GRADE 50 UNLESS OTHERWISE NOTED. ALL W24 X 162 ROOF BEAMS SHALL BE ASTM A572 GRADE 60 STEEL.
4. ASTM A325 HIGH STRENGTH STEEL BOLTS SHALL BE USED FOR ALL BOLTED CONNECTIONS, UNLESS OTHERWISE NOTED.
5. GROUT SHALL BE PRE-MIXED, SHRINKAGE RESISTANT, AND NON-METALLIC.
6. ALL STEEL SURFACES SHALL BE CLEANED AND PAINTED IN ACCORDANCE WITH SPECIFICATION SECTION 09900 PAINTING". ALL BLEMISHES IN THE PAINT COATING SHALL BE TOUCH UP PAINTED.
7. AFTER INSTALLATION OF METAL WORK, ALL FIELD WELDS, BOLT HEADS, NUTS, AND SCARRED SURFACES SHALL BE TOUCH UP PAINTED. WIRE BRUSH AND SOLVENT CLEAN ALL WELD SCARS, BRUISES, ABRASIONS, AND RUST SPOTS BEFORE TOUCH UP PAINTING.
8. WET PAINT SIGNS SHALL BE POSTED.
9. ELEVATION 10.27' ABOVE MEAN SEALEVEL IS REFERENCE ELEVATION (0'-0") ON ALL DRAWINGS. SEE SHEET S2 FOR BENCHMARK LOCATION.
10. ALL DIMENSIONS ARE IN INCHES UNLESS OTHERWISE NOTED.
11. THE CONTRACTOR SHALL MAINTAIN CONCRETE PIT DEWATERING AT ALL TIMES UNTIL CONTRACT COMPLETION.
12. DECIMAL DIMENSIONS ARE USED FOR BOLT PATTERN LAYOUTS TO ENSURE CONFORMITY WITH THE DECIMAL DIMENSIONS GIVEN ON LOCKHEED INTERFACE EQUIPMENT. THE LOCKHEED INTERFACE EQUIPMENT IS NOT INCLUDED IN THIS CONTRACT.
13. ALL WELDS SHALL BE COMPLETE JOINT PENETRATION (CJP) WELDS U.O.N.. EITHER PLATE MAY BE BEVELED FOR COMPLETE PENETRATION WELDS. BACKING PLATES MAY BE USED TO FACILITATE CJP WELD ACCORDING TO CHAPTER 9 OF ANSI/AWS D1.1-94 FOR DYNAMICALLY LOADED STRUCTURES. ALL WELDING SHALL BE DONE IN ACCORDANCE WITH AWS D1.1-94, STRUCTURAL WELDING CODE. ALL CJP WELDS SHALL BE BACKGOUGED AND VISUALLY INSPECTED BY A CERTIFIED WELDING INSPECTOR PRIOR TO FILLING THE BACKGOUGED JOINT. MAGNETIC PARTICLE INSPECT THE FINAL SURFACES OF ALL CJP WELDS.
14. ALL BOLT HOLES SHALL BE STANDARD SIZE HOLES AT 1/16 INCH OVERSIZE DIAMETER, IN ACCORDANCE WITH AISC 9TH EDITION, ASD, "SPECIFICATIONS FOR STRUCTURAL JOINTS USING ASTM A325 OR A490 BOLTS", PAGES 5-265 THROUGH 5-286, UNLESS OTHERWISE NOTED.

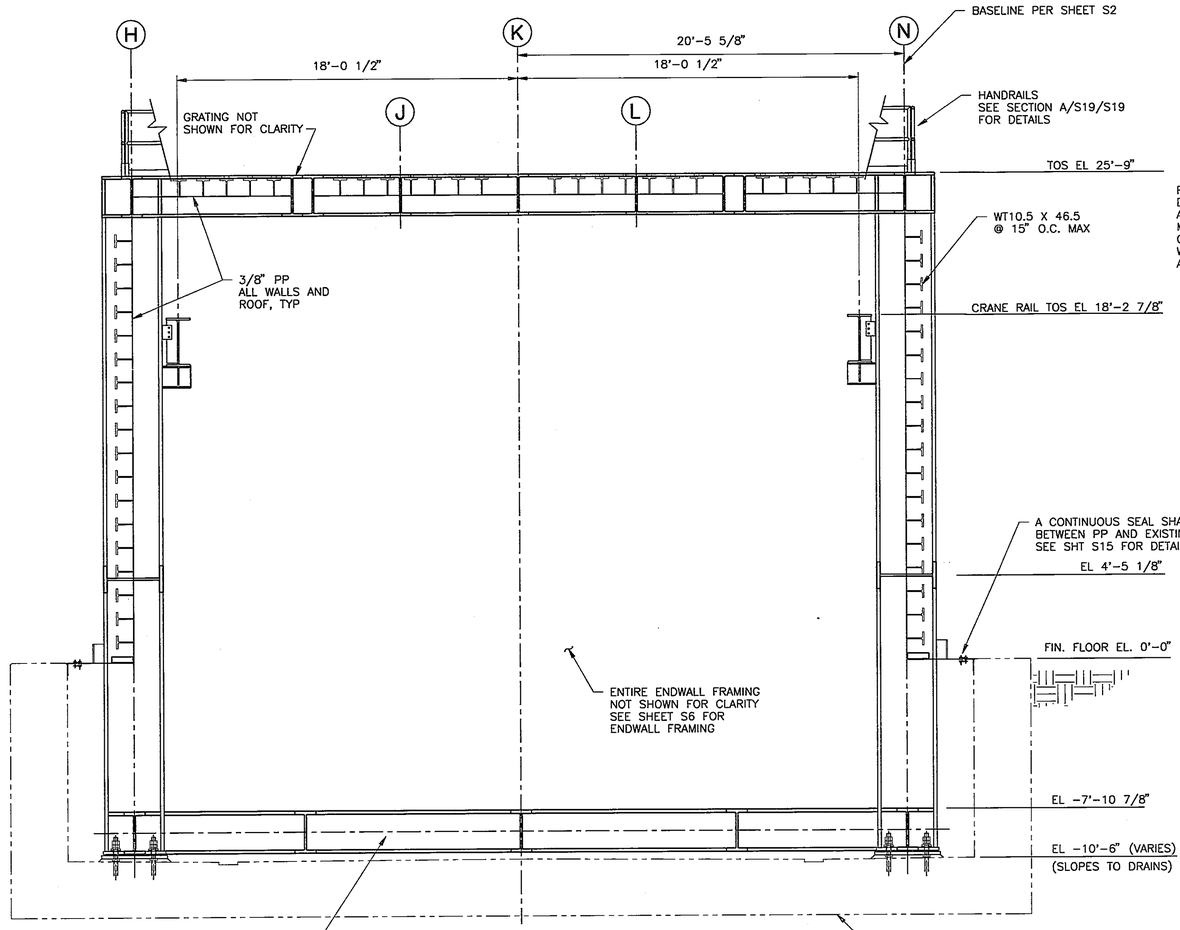

SECTION A (S2 | S3)
SCALE: 1/4" = 1'-0"

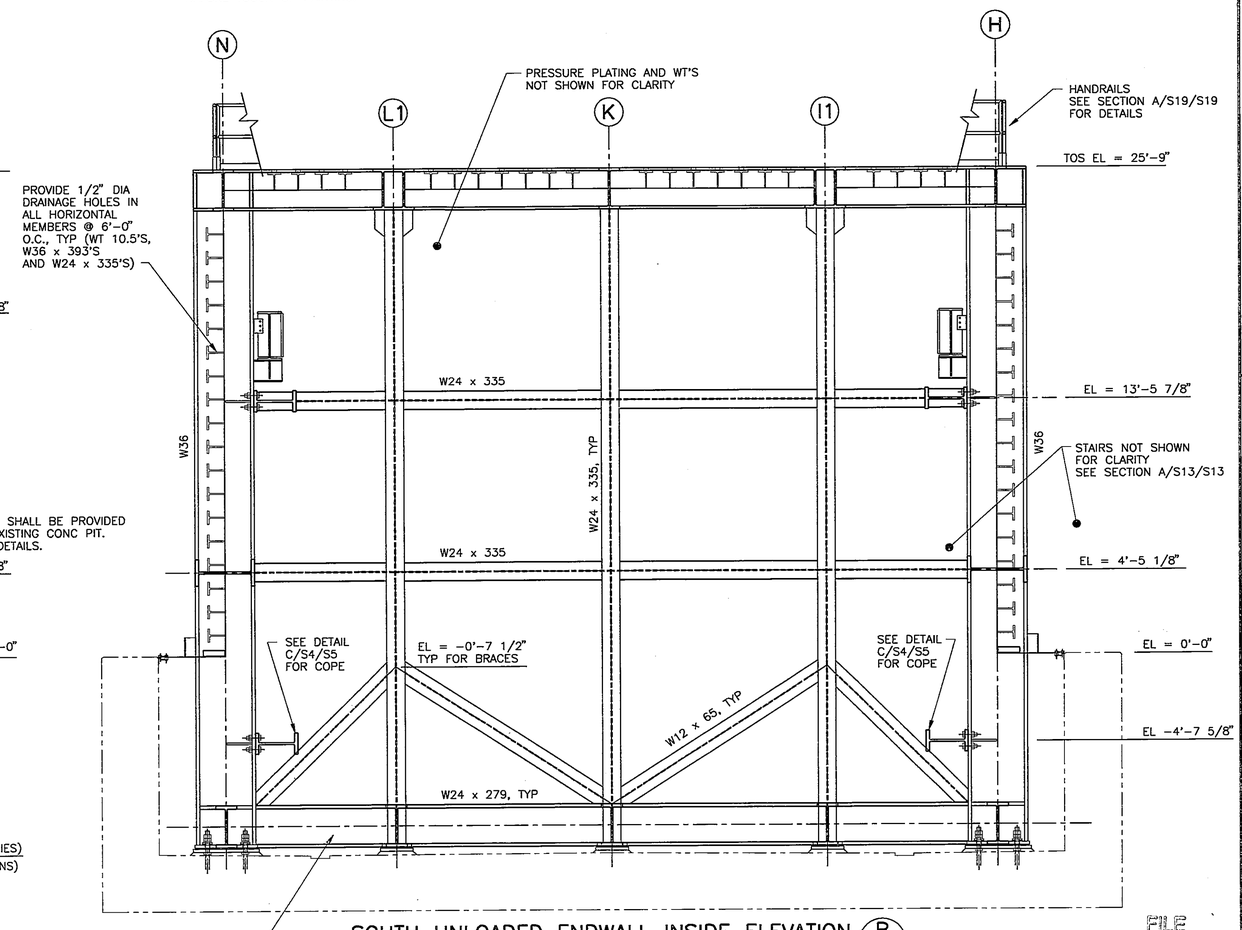

SOUTH UNLOADED ENDWALL INSIDE ELEVATION B (S2 | S3)
SCALE: 1/4" = 1'-0"

FILE
JUN 2 1995

REVISIONS															
DATE	LTR	FREQ	DESCRIPTION	BY	CHECK	APPD	DATE	LTR	FREQ	DESCRIPTION	BY	CHECK	APPD

Sverdrup
TECHNOLOGY INC.
LANGLEY DIVISION

WORK ORDER NO. RD08130A92/1118

APPROVALS	DATE
DRAFT.	5/15/95
ENG.	5/15/95
CHECK.	5/15/95
PROJ. ENG.	5/15/95
SURV'N.	5/15/95

APPROVALS				
NAME	ORGANIZATION	DATE		DATE
J. W. Mayhew	FSED	5/15/95	DRAWN	
			DESIGNED	
			CHECKED	5/15/95
			APPROVED	5/15/95
			TECH. PROJ. ENG.	5/15/95
			RES. PROJ. ENG.	

TOLERANCE ON DIMENSIONS UNLESS SHOWN OTHERWISE — ANGULAR ± X.XX (2 DECIMAL PLACES) ±.02, X.XXX (3 DECIMAL PLACES) ±.005 — SURFACE FINISH IN MICROINCHES RMS UNLESS SHOWN OTHERWISE ✓

FOR DRAWING INDEX, LEGEND AND ABBREVIATIONS, SEE DRAWING 260427

NATIONAL AERONAUTICS & SPACE ADMINISTRATION
LANGLEY RESEARCH CENTER
HAMPTON, VIRGINIA 23681-0001

PROJECT TITLE: COLTS REACTING PIT STEEL

DRAWING TITLE: UNLOADED ENDWALL ELEVATION AND GENERAL NOTES

BUILDING NO. 1256 | SIZE D | DRAWING NO. 260429 | LATEST REV.

SHEET NO. S3

PBV

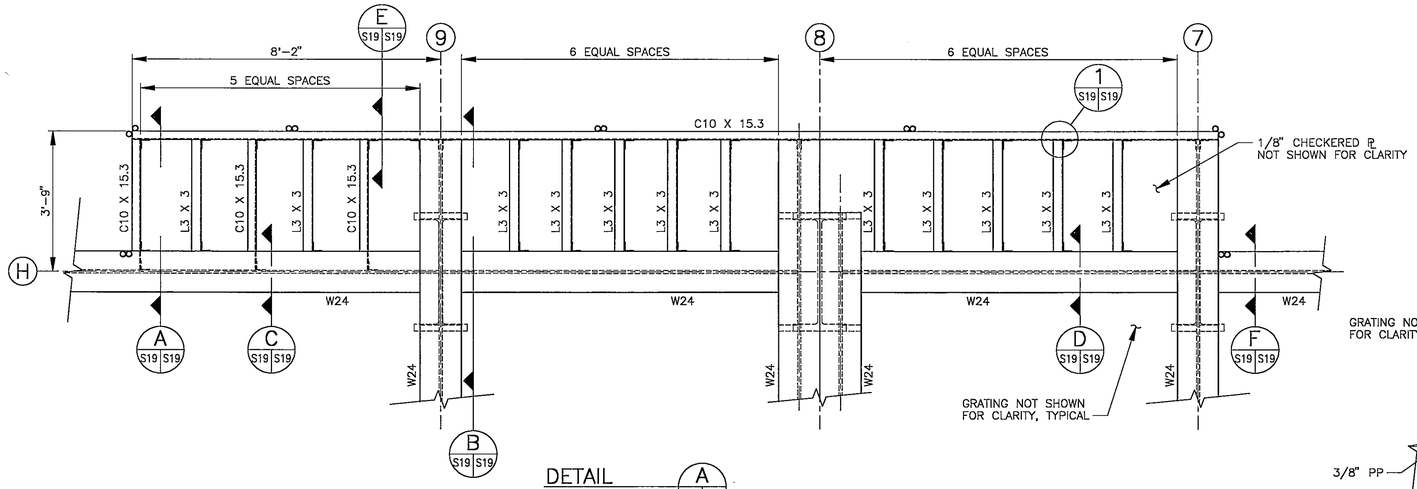

DETAIL A
SCALE: 1/2" = 1'-0"

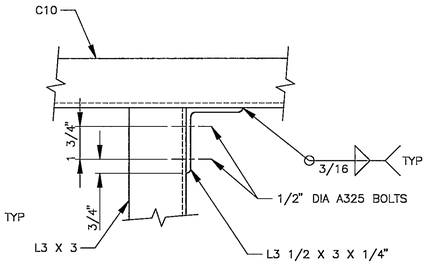

DETAIL 1
SCALE: 3" = 1'-0"

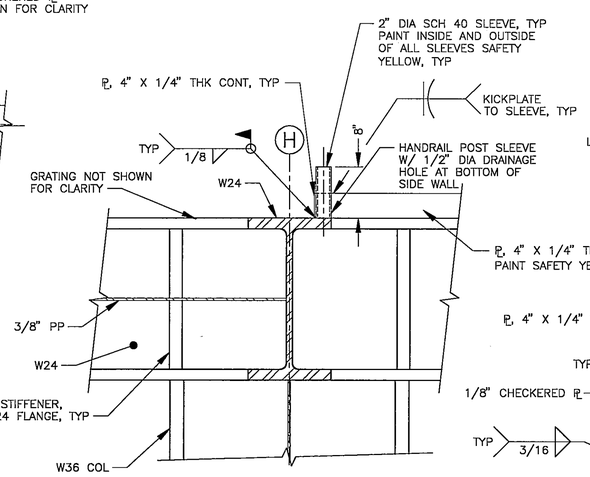

SECTION F
SCALE: 1" = 1'-0"

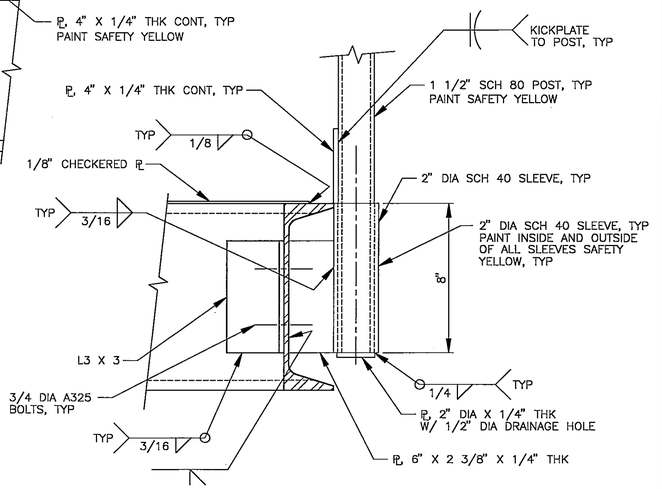

SECTION E
SCALE: 3" = 1'-0"

— NOTE —

REMOVABLE HANDRAILS SECTIONS AND MATCHING SLEEVES SHALL BE MATCH-MARKED FOR REPLACEMENT AFTER REMOVAL. THE HANDRAILS SHALL BE MARKED IN NUMERICAL ORDER STARTING IN THE NORTHEAST CORNER AND PROCEEDING IN A CLOCKWISE DIRECTION. MARKING SHALL BE ACCOMPLISHED BY STAMPING PRIOR TO PAINTING. MARK SHALL BE LOCATED 10" ABOVE THE BOTTOM OF EACH HANDRAIL POST ON THE FACE TOWARD THE MIDDLE OF THE ENCLOSURE, AND ON EACH SLEEVE 2" FROM THE TOP ON THE SAME FACE AS THE HANDRAIL SECTION. STAMP LETTERING SHALL BE 1/2" TALL, MINIMUM.

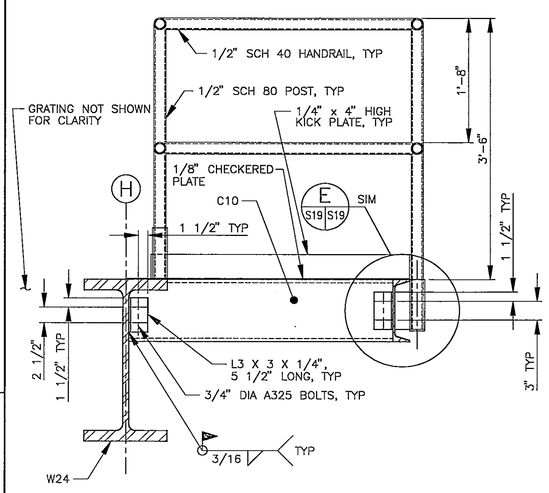

SECTION A
SCALE: 1" = 1'-0"

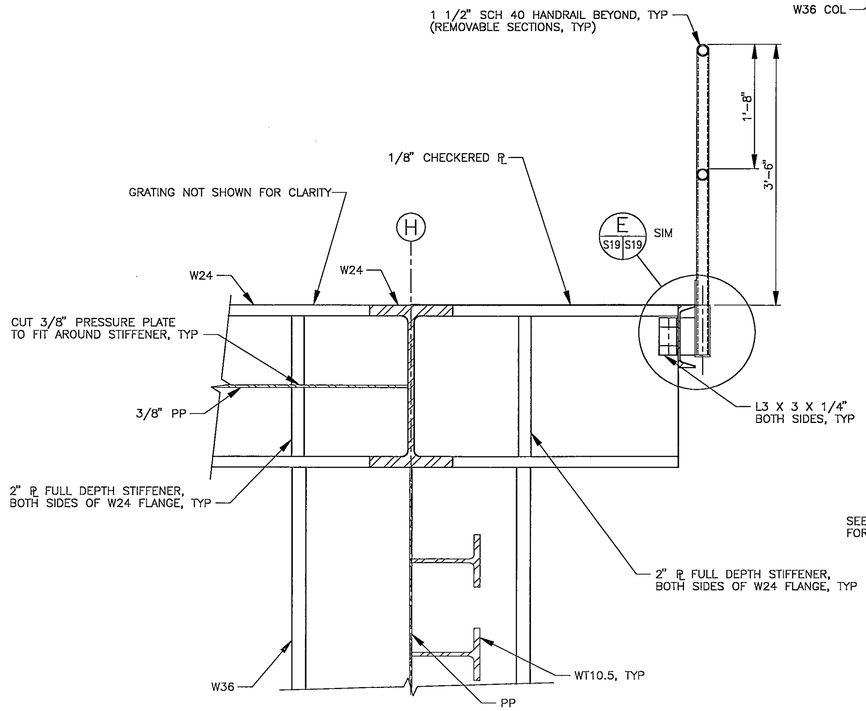

SECTION B
SCALE: 1" = 1'-0"

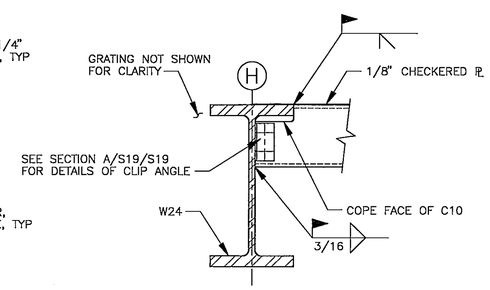

SECTION C
SCALE: 1" = 1'-0"
TYPICAL 3 PLACES

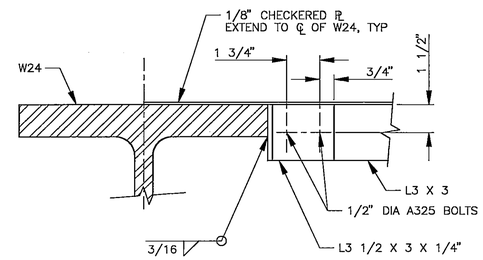

SECTION D
SCALE: 3" = 1'-0"

FILE
JUN 2 1995

REVISIONS								REVISIONS							
DATE	LTR	FREQ	DESCRIPTION	BY	CHECK	APPD		DATE	LTR	FREQ	DESCRIPTION	BY	CHECK	APPD	

Sverdrup
TECHNOLOGY INC.
LANGLEY DIVISION

WORK ORDER NO. RD08130A92/1118

APPROVALS	DATE
DRAFT. P. MUIR	05/15/95
ENG. E. K. SVENDSEN	05/15/95
CHECK J. F. DOUGHERTY	05/15/95
PROJ. ENG. E. K. SVENDSEN	05/15/95
SUPV'N. D. O'LOUGHLIN	05/15/95

APPROVALS	NAME	ORGANIZATION	DATE
DRAWN		FSED	5/15/95
DESIGNED			
CHECKED			5/15/95
APPROVED			5/15/95
TECH. PROJ. ENGR.			5/15/95
RES. PROJ. ENG.			

TOLERANCE ON DIMENSIONS UNLESS SHOWN OTHERWISE — ANGULAR ± X.XX (2 DECIMAL PLACES) ±.02, X.XXX (3 DECIMAL PLACES) ±.005
SURFACE FINISH IN MICROINCHES RMS UNLESS SHOWN OTHERWISE

FOR DRAWING INDEX, LEGEND AND ABBREVIATIONS, SEE DRAWING 260427

NATIONAL AERONAUTICS & SPACE ADMINISTRATION
LANGLEY RESEARCH CENTER
HAMPTON, VIRGINIA 23681-0001

PROJECT TITLE: COLTS REACTING PIT STEEL
DRAWING TITLE: ROOF EXTENSION DETAILS

BUILDING NO. 1256 | SIZE D | DRAWING NO. 260445 | LATEST REV.
SHEET NO. S19

PBV