Downloaded from http://www.everyspec.com on 2010-01-26T2:50:27.

METRIC

MIL-STD-1472F
23 August 1999
SUPERSEDING
MIL-STD-1472E
31 March 1998

DEPARTMENT OF DEFENSE DESIGN CRITERIA STANDARD

HUMAN ENGINEERING

AMSC N/A **AREA HFAC**

DISTRIBUTION STATEMENT A: Approved for public release; distribution is unlimited.

Downloaded from http://www.everyspec.com on 2010-01-26T2:50:27.

FOREWORD

1. This standard has been approved for use by all Departments and Agencies of the Department of Defense.

2. This standard establishes general human engineering criteria for design and development of military systems, equipment and facilities. Its purpose is to present human engineering design criteria, principles and practices to be applied in the design of systems, equipment and facilities so as to:

a. Achieve required performance by operator, control and maintenance personnel.

b. Minimize skill and personnel requirements and training time.

c. Achieve required reliability of personnel-equipment combinations.

d. Foster design standardization within and among systems.

3. This standard does not alter requirements for system development participation of human engineering specialists to interpret and implement these practices and to provide solutions to human engineering problems which arise and which are not specifically covered herein.

4. MIL-HDBK-759 is intended to serve as a companion document to this standard and should be consulted for data, preferred practices, and design guidelines, including design guidelines for variations of basic hardware configurations covered herein. *

5. Requirements herein are expressed in the International System of units (SI). As a convenience, the metric units are accompanied by their approximate customary system equivalents (in parentheses). Angular measure is expressed in degrees unless it is necessary to specify fractions of a degree where milliradians are used.

6. This revision has not expanded 5.13, Hazards and Safety, in any signficant way since the original intent of this subsection was to limit its coverage to what was most likely to be encountered during human engineering work and was moderately expanded only to accommodate requests by safety and health practitioners and review activities.

7. Subsection 5.14 is intended to provide only basic criteria on user-computer interface; therefore, this revision has not updated 5.14 other than to correct errors. Moreover, when going beyond fundamental criteria, the need for flexibility outweighs benefits that might be gained by expanding 5.14 that would limit software design. This flexibility is provided by handbooks and style guides, such as the DoD Human Computer Interface Style Guide (Volume 8 of the Department of Defense Technical Architecture Framework for Information Management or TAFIM). When a national standard becomes available, it will be considered as a cited replacement, in whole or part, for 5.14.

8. Beneficial comments (recommendations, additions, deletions) and any pertinent data which may be of use in improving this document should be addressed to Commander, U.S. Army Aviation and Missile Command, ATTN: AMSAM-RD-SE-TD-ST, Redstone Arsenal, AL 35898-5000 by using the self-addressed Standardization Document Improvement Proposal (DD Form 1426) appearing at the end of this document or by letter.

Downloaded from http://www.everyspec.com on 2010-01-26T2:50:27.

CONTENTS

PARAGRAPH		PAGE
	FOREWORD	ii
1	SCOPE	1
1.1	Scope	1
1.2	Purpose	1
1.3	Application	1
1.4	Force limits	2
1.5	Manufacturing tolerances	2
2	APPLICABLE DOCUMENTS	2
2.1	General	2
2.2	Government documents	2
2.3	Non-government publications	3
2.4	Order of precedence	4
3	DEFINITIONS	5
4	GENERAL REQUIREMENTS	5
4.1	Objectives	5
4.2	Standardization	5
4.3	Function allocation	5
4.4	Human engineering design	5
4.5	Fail safe design	6
4.6	Simplicity of design	6
4.7	Interaction	6
4.8	Safety	6
4.9	Ruggedness	7
4.10	Design for NBC Survivability	7
4.11	Design for electromagnetic pulse (EMP) hardening	7
4.12	Automation	7
4.13	Functional use of color	7
4.14	Design of aircrew systems	7
5	DETAILED REQUIRMENTS	8
5.1	Control/display integration	8
5.1.1	General criteria	8
5.1.2	Position relationships	8
5.1.3	Movement relationships	10
5.1.4	Control/display movement ratio	11
5.1.5	Signal precedence	12
5.2	Visual displays	13
5.2.1	General	13
5.2.2	Transilluminated displays	20
5.2.2.1	General	20
5.2.2.2	Legend lights	22
5.2.2.3	Simple indicator lights	23
5.2.2.4	Transilluminated panel assemblies	24
5.2.3	Scale indicators	24

Downloaded from http://www.everyspec.com on 2010-01-26T2:50:27.

PARAGRAPH		PAGE
5.2.3.1	General	24
5.2.3.2	Moving-pointer, fixed-scale displays	27
5.2.3.3	Fixed-pointer, moving-scale displays	30
5.2.4	Cathode ray tube displays	30
5.2.5	Large screen displays	32
5.2.6	Other displays	34
5.2.6.1	General	34
5.2.6.2	Counters	35
5.2.6.3	Printers	35
5.2.6.4	Plotters and recorders	36
5.2.6.5	Flags	37
5.2.6.6	Light-emitting diodes (LEDs)	37
5.2.6.7	Dot matrix/segmented displays	38
5.2.6.8	Electroluminescent displays	38
5.2.6.9	Liquid crystal displays (LCDs)	39
5.2.6.10	Representational displays	39
5.2.6.11	Stereoscopic displays	39
5.2.6.12	Head-up displays (HUDs)	40
5.2.6.13	Helmet mounted displays (HMDs)	41
5.3	Audio displays	42
5.3.1	General	42
5.3.2	Audio warnings	44
5.3.3	Characteristics of audio warning signals	44
5.3.4	Signal characteristics in relation to operational conditions and objectives	45
5.3.5	Verbal warning signals	46
5.3.6	Controls for audio warning devices	47
5.3.7	Speech transmission equipment	48
5.3.8	Speech reception equipment	49
5.3.9	Operator comfort and convenience	50
5.3.10	Operating controls for voice communication equipment	50
5.3.11	Telephone systems	50
5.3.11.1	Conventional telephone systems	50
5.3.11.2	Sound-powered telephones	51
5.3.12	3D audio displays	52
5.3.13	Speech displays	52
5.3.14	Speech intelligibility	52
5.4	Controls	54
5.4.1	General criteria	54
5.4.2	Rotary controls	60
5.4.2.1	Discrete adjustment rotary controls	60
5.4.2.2	Continuous adjustment rotary controls	64
5.4.3	Linear controls	70
5.4.3.1	Discrete linear controls	70
5.4.3.2	Continuous adjustment linear controls	83
5.4.4	High-force controls	93
5.4.5	Miniature controls	93
5.4.6	Touch-screen controls for displays	96
5.4.7	Speech recognition	96
5.4.8	Eye-and head-based controls	98
5.4.9	J-handles	98

Downloaded from http://www.everyspec.com on 2010-01-26T2:50:27.

PARAGRAPH		PAGE
5.5	Labeling	100
5.5.1	General	100
5.5.2	Orientation and location	100
5.5.3	Contents	100
5.5.4	Qualities	100
5.5.5	Design of label characters	101
5.5.6	Equipment labeling	102
5.6	Physical accommodation	105
5.6.1	General	105
5.6.2	Accommodation policy	105
5.6.3	Anthropometric data	105
5.6.4	Strength	106
5.7	Workspace design	107
5.7.1	General	107
5.7.2	Standing operations	107
5.7.3	Seated operations	108
5.7.4	Standard console design	109
5.7.5	Special-purpose console design	111
5.7.6	Stairs, ladders, ramps, platforms, catwalks, tunnels, and crawl spaces	111
5.7.7	Ingress and egress	117
5.7.8	Surface colors	118
5.7.9	Lighting control and identification	119
5.8	Environment	120
5.8.1	Heating, ventilating, and air conditioning	120
5.8.2	Illuminance	123
5.8.3	Acoustical noise	123
5.8.4	Vibration	129
5.8.5	Virtual environments	130
5.9	Design for maintainer	131
5.9.1	General	131
5.9.2	Mounting of items within units	132
5.9.3	Adjustment controls	132
5.9.4	Accessibility	132
5.9.5	Lubrication	133
5.9.6	Case and cover mounting	133
5.9.7	Cases	133
5.9.8	Covers	134
5.9.9	Access openings and covers	134
5.9.10	Fasteners	137
5.9.11	Unit design for efficient handling	138
5.9.12	Mounting	141
5.9.13	Conductors	148
5.9.14	Connectors	149
5.9.15	Test points	150
5.9.16	Test equipment	150
5.9.17	Failure indications and fuse requirements	150
5.9.18	Printed circuit boards	151

Downloaded from http://www.everyspec.com on 2010-01-26T2:50:27.

PARAGRAPH		PAGE
5.10	Design of equipment for remote handling	152
5.10.1	Characteristics of equipment to be handled remotely	152
5.10.2	Feedback	152
5.10.3	Manipulator	152
5.10.4	Viewing equipment	152
5.10.5	Illumination	153
5.11	Small systems and equipment	154
5.11.1	Portability and load carrying	154
5.11.2	Tracking	155
5.11.3	Optical instruments and related equipment	155
5.12	Operational and maintenance ground/shipboard vehicles	161
5.12.1	General	161
5.12.2	Seating	161
5.12.3	Controls	162
5.12.4	Operational instructions	164
5.12.5	Visibility	164
5.12.6	Heating and ventilation	165
5.12.7	Trailers, vans, and intervehicular connections	165
5.12.8	Cranes, materials handling, and construction	166
5.12.9	Automotive subsystems	167
5.13	Hazards and safety	168
5.13.1	General	168
5.13.2	Warning labels and placards	168
5.13.3	Pipe, hose, and tube line identification	169
5.13.4	General workspace hazards	169
5.13.5	General equipment-related hazards	169
5.13.6	Platforms	170
5.13.7	Electrical, mechanical, fluid, toxic, and radiation hazards	170
5.13.8	Trainers	172
5.13.9	Stealth and covert operations	172
5.14	User-computer interface	173
5.14.1	General	173
5.14.2	Data entry	173
5.14.3	Data display	177
5.14.4	Interactive control	186
5.14.5	Feedback	191
5.14.6	Prompts	192
5.14.7	Default	193
5.14.8	Error management/data protection	193
5.14.9	System response time	195
5.14.10	Other requirements	195
5.14.11	Data and message transmission	195
5.15	Visual display terminals	198
6	NOTES	199
6.1	Intended use	199
6.2	Issue of DoDISS	199
6.3	Subject term (key word) listing	
6.4	Changes from previous issue	199

Downloaded from http://www.everyspec.com on 2010-01-26T2:50:27.

FIGURE PAGE

1. Lines of sight ---------- 16
2. Vertical and horizontal visual field ---------- 17
3. Scale marker dimensions ---------- 26
4. Relative position of scale marks, numerals, and pointers on circular dials ---------- 29
5. Rotary selector switch ---------- 61
6. Key-operated switch ---------- 62
7. Discrete Thumbwheel control ---------- 64
8. Knobs ---------- 65
9. Ganged knobs ---------- 66
10. Continuous adjustment thumbwheel ---------- 68
11. Cranks ---------- 69
12. Pushbuttons (finger or hand operated) ---------- 73
13. Foot operated switches ---------- 74
14. Toggle switches ---------- 76
15. Legend switches ---------- 78
16. Rocker switches ---------- 79
17. Slide switches ---------- 81
18. Lever ---------- 84
19. Isotonic joysticks ---------- 86
20. Ball controls ---------- 90
21. Pedals ---------- 92
22. Leg strength at various knee and thigh angles (5th percentile male data)---------- 93
23. Arm, hand, and thumb-finger strength (5th percentile male data) ---------- 94
24. Touch screen ---------- 97
25. High torque J-handles ---------- 99
26. Standard console dimensions key ---------- 110
27. Example of horizontal wrap-around console ---------- 112
28. Example of vertical/stacked segments ---------- 112
29. Type of structure in relation to angle of ascent ---------- 112
30. Stair dimensions ---------- 114
31. Stair-ladder dimensions ---------- 115
32. Fixed ladder dimensions ---------- 116
33. Whole body access opening ---------- 119
34. Effective temperature (E.T.) or corrected effective temperature (C.E.T)---------- 120
35. Ventilation requirements ---------- 121
36. Summer and winter comfort zones and thermal tolerance for inhabited Compartments ---------- 122
37 Permissible distance between speaker and listeners for specified voice levels and ambient noise levels ---------- 127
38. Range of acceptable reverberation time ---------- 128
39. Arm and hand access dimensions ---------- 136
40. Examples of push force conditions for Table XVII ---------- 142
41. Static muscle strength data ---------- 144
42. Minimum handle dimensions ---------- 147
43. Anatomical limits on axially symmetrical ocular metal parts---------- 158
44. Dimensions for vehicle operator's seat ---------- 161
45. Recommended clearances around equipment operator's station ---------- 163

Downloaded from http://www.everyspec.com on 2010-01-26T2:50:27.

TABLE		PAGE
I	Paragraph changes where exclusive use by male personnel is specified	1
II	Coding of simple indicator lights	23
III	Application of various types of mechanical displays	25
IV	Group viewing of optical projection displays	34
V	Functional evaluation of audio signals	43
VI	Intelligibility criteria for voice communication systems	53
VII	Minimum, edge-to-edge separation distances for controls	55
VIII	Advantages and disadvantages of various types of control coding	56
IX	Handwheels	71
X	Keyboards	75
XI	Push-pull controls	82
XII	Mouse	90
XIII	Character height versus luminance	102
XIV	Standard console dimensions	109
XV	Specific task illumination requirements	124
XVI	Recommendations for display lighting	126
XVII	Maximum design weight limits	139
XVIII	Horizontal push and pull forces exertable intermittently or for short periods of time (male personnel)	141
XIX	Static muscle strength	143
XX	Recommended clearances around equipment operator's station to accommodate the 95th percentile soldier dressed in Arctic clothing	162
XXI	Temperature exposure limits	169
XXII	Maximum acceptable system response times	196

INDEX 200

CONCLUDING MATERIAL 210

Downloaded from http://www.everyspec.com on 2010-01-26T2:50:27.

1. SCOPE

1.1 Scope. This standard establishes general human engineering design criteria for military systems, subsystems, equipment and facilities.

1.2 Purpose. The purpose of this standard is to present human engineering design criteria, principles, and practices to achieve mission success through integration of the human into the system, subsystem, equipment, and facility, and achieve effectiveness, simplicity, efficiency, reliability, and safety of system operation, training, and maintenance.

1.3 Application. This standard is applicable to the design of all systems, subsystems, equipment and facilities, except where provisions relating to aircraft design conflict with crew system design requirements or guidelines of JSSG-2010. Nothing in this standard is to be construed as limiting the selection of hardware, materials, or processes to the specific items described herein. Unless otherwise stated in specific provisions, this standard applies to design of systems, subsystems, equipment and facilities for use by both men and women. This standard is not intended to be a criterion for limiting use of materiel already in the field in areas such as lift repetition or temperature exposure time. Where the procuring activity establishes use by male personnel exclusively, the paragraphs listed in Table I are changed as noted therein.

TABLE I. Paragraph changes where exclusive use by male personnel is specified

Paragraph	Line	From	To
5.2.1.4.11	2&3	64 cm (25 in)	70 cm (28 in)
5.4.4.2	3&4	and should ... adjustment)	(delete)
5.4.4.3	4&5	The ... adjustment)	(delete)
5.7.2.2	2	178 cm (70 in)	188 cm (74 in)
5.7.2.3	2	165 cm (65 in)	175 cm (69 in)
5.7.2.4	2	178 cm (70 in)	188 cm (74 in)
5.7.2.5	2 3	135 cm (53 in) 53 cm (21 in)	145 cm (57 in) 56 cm (22 in)
5.7.3.4.2	1&2	38 cm (15 in)	40 cm (16 in)
5.7.3.6	2	117 cm (46 in)	122 cm (48 in)
5.7.3.7	2 2	89 cm (35 in) 53 cm (21 in)	94 cm (37 in) 56 cm (22 in)
5.7.3.9	2	86 cm (34 in)	89 cm (35 in)
5.7.3.10	2	74 cm (29 in)	76 cm (30 in)
5.7.5.1.4	2	69 cm (27 in)	75 cm (29.5 in)
Table XIV	A1 A3&4 B1 B3&4	1.170 m (46.0 in) 1.335 m (52.5 in) 1.435 m (56.5 in) 1.535 m (60.5 in) 520 mm (20.5 in) 620 mm (24.5 in)	1.210 m (47.5 in) 1.370 m (54.0 in) 1.470 m (58.0 in) 1.570 m (62.0 in) 560 mm (22.0 in) 660 mm (26.0 in)
Figure 26	G H	150 mm (6 in) 190 mm (7.5 in)	125 mm (5 in) 165 mm (6.5 in)
5.7.6.1.2	4	13 kg (29 lbs)	18 kg (40 lbs)
Figure 32	B-Max	380 mm (15 in)	410 mm (16 in)
5.9.11.4.1	4 - 6	Delete second and (third) sentences	

Downloaded from http://www.everyspec.com on 2010-01-26T2:50:27.

1.4 Force limits. If it is known that an item is to be used by an already established military occupational specialty, for which physical qualification requirements for entry into that specialty are also established, any discrepancy between the force criteria of this standard and the physical qualification requirements will be resolved in favor of the latter. In this event, the least stringent physical qualification requirement of all specialties which may operate, maintain, transport, supply, move, lift or otherwise manipulate the item in the manner being considered, will be used as a maximum design force limit. If such physical qualification requirements for entry into a specialty do not cover the task covered herein, the criteria herein will govern.

1.5 Manufacturing tolerances. When manufacturing tolerances are not perceptible to the user, this standard will not be construed as preventing the use of components whose dimensions are within a normal manufacturing upper or lower limit tolerance of the dimensions specified herein.

2. APPLICABLE DOCUMENTS

2.1 General. The documents listed in this section are specified in sections 3, 4, and 5 of this standard. This section does not include documents cited in other sections of this standard or recommended for additional information or as examples. While every effort has been made to ensure the completeness of this list, document users are cautioned that they must meet all specified requirements documents cited in sections 3, 4, and 5 of this standard, whether or not they are listed.

2.2 Government documents.

2.2.1 Specifications, standards, and handbooks. The following specifications, standards, and handbooks form a part of this document to the extent specified herein. Unless otherwise specified, the issues of these documents are those listed in the issue of the Department of Defense Index of Specifications and Standards (DoDISS) and supplement thereto, cited in the solicitation (see 6.2).

SPECIFICATIONS

DEPARTMENT OF DEFENSE

MIL-M-18012 - Markings for Aircrew Station Displays, Design and Configuration of

MIL-C-25050 - Colors, Aeronautical Lights and Lighting Equipment, General Specification for

STANDARDS

FEDERAL

FED-STD-595 - Colors

DEPARTMENT OF DEFENSE

MIL-STD-1474 - Noise Limits *

HANDBOOKS

DEPARTMENT OF DEFENSE

MIL-HDBK-454 - General Guidelines for Electronic Equipment
DOD-HDBK-743 - Anthropometry of US Military Personnel
MIL-HDBK-759 - Human Factors Engineering Design for Army Materiel

Downloaded from http://www.everyspec.com on 2010-01-26T2:50:27.

MIL-HDBK-1473	-	Color and Marking of Army Materiel
MIL-HDBK-1908	-	Definitions of Human Factors Terms

(Unless otherwise indicated, copies of federal and military specifications, standards, and handbooks are available from the Standardization Documents Order desk, 700 Robbins Avenue, Bldg 4D, Philadelphia, PA 19111-5094.)

2.2.2 Other Government documents, drawings, and publications. The following other Government documents, drawings, and publications form a part of this document to the extent specified herein. Unless otherwise specified, the issues are those cited in the solicitation.

29 CFR 1910	-	Occupational Safety and Health Standards
JTA 2.0	-	DoD Joint Technical Architecture

(Copies of specifications, standards, and other publications required by contractors in connection with specific acquisition functions should be obtained from the contracting activity or as directed by the contracting officer.)

2.3 Non-government publications. The following document(s) form a part of this document to the extent specified herein. Unless otherwise specified, the issues of the document which are DoD adopted are those listed in the issue of the DoDISS cited in the solicitation. Unless otherwise specified, the issues of these documents not listed in the DoDISS are the issues of the documents cited in the solicitation (see 6.2).

AMERICAN CONFERENCE OF GOVERNMENTAL INDUSTRIAL HYGIENISTS (ACGIH)

ACGIH TLV	-	Threshold Limit Values

(Application for copies should be addressed to the ACGIH, 1014 Broadway, Cincinnati, OH 45202.)

AMERICAN NATIONAL STANDARDS INSTITUTE (ANSI)

ANSI S1.1	-	Acoustical Terminology
ANSI Sl.4	-	Sound Level Meters, Specification for (DoD Adopted)
ANSI S1.6	-	Preferred Frequencies and Band Numbers for Acoustical Measurement (DoD Adopted)
ANSI S3.2	-	Monosyllabic Word Intelligibility, Method for Measurement of (DoD Adopted)
ANSI S3.5	-	Articulation Index, Method for the Calculation of (DoD Adopted)
ANSI Z535.1	-	Safety Color Code
ANSI Z535.2	-	Environmental and Facility Safety Signs

(Application for copies should be addressed to the American National Standards Institute, Inc., 1430 Broadway, New York, NY 10018.)

AMERICAN SOCIETY FOR TESTING AND MATERIALS (ASTM)

ASTM SI 10	-	Standard Practice for Use of the International System of Units (SI): The Modernized Metric System (DoD Adopted)

(Application for copies should be addressed to the American Society for Testing and Materials, 100 Barr Harbor Drive, West Conshohocken, PA 19428-2959.)

Downloaded from http://www.everyspec.com on 2010-01-26T2:50:27.

HUMAN FACTORS AND ERGONOMICS SOCIETY (HFES)

ANSI/HFS 100	-	American National Standard for Human Factors Engineering of Visual Display Terminal Workstations (DoD Adopted)

(Application for copies should be addressed to the Human Factors and Ergonomics Society, Inc., P.O. Box 1369, Santa Monica, CA 90406.)

INSTITUTE OF ELECTRICAL AND ELECTRONICS ENGINEERS (IEEE)

IEEE SI 10	-	Standard Practice for Use of the International System of Units (SI)… The Modernized Metric System (DoD Adopted)

(Application for copies should be addressed to the Institute of Electrical and Electronics Engineers, Inc., 345 East 47th Street, New York, NY 10017)

INTERNATIONAL ORGANIZATION FOR STANDARDIZATION (ISO)

ISO 2041	-	Vibration and shock—Vocabulary
ISO 2631-1	-	Mechanical Vibration and Shock—Evaluation of Human Exposure to Whole-body Vibration—Part l: General Requirements
ISO 2631-2	-	Mechanical Vibration and Shock—Evaluation of Human Exposure to Whole-body Vibration—Part 2: Continuous and Shock-induced Vibration in Buildings (1 to 80 Hz)
ISO 5805	-	Mechanical Vibration and Shock—Human Exposure—Vocabulary
ISO 9241-9	-	Ergonomic Requirements for Work with Visual Display Terminals, Part 9 - Requirements for Non-Keyboard Input Devices

(Application for copies should be addressed to the American National Standards Institute, Inc., 1430 Broadway, New York, NY 10018.)

SOCIETY OF AUTOMOTIVE ENGINEERS (SAE)

SAE J925	-	Minimum Access Dimensions for Construction and Industrial Machinery (DoD Adopted)

(Application for copies should be addressed to the Society of Automotive Engineers, 400 Commonwealth Drive, Warrendale, PA 15096-0001.)

(Non-Government standards and other publications are normally available from the organizations that prepare or distribute the documents. These documents also may be available in or through libraries or other informational services.)

2.4 Order of precedence. In the event of a conflict between the text of this document and the references cited herein, the text of this document takes precedence. Nothing in this document, however, supersedes applicable laws and regulations unless a specific exemption has been obtained.

Downloaded from http://www.everyspec.com on 2010-01-26T2:50:27.

3. DEFINITIONS

Unless otherwise specified, terms are defined in accordance with MIL-HDBK-1908.

4. GENERAL REQUIREMENTS

4.1 Objectives. Military systems, equipment and facilities shall provide work environments which foster effective procedures, work patterns, and personnel safety and health, and which minimize factors which degrade human performance or increase error. Design induced requirements for operator workload, accuracy, time constraint, mental processing, and communication shall not exceed operator capabilities. Design shall also minimize personnel and training requirements within the limits of time, cost, and performance trade-offs.

4.2 Standardization. Controls, displays, marking, coding, labeling, and arrangement schemes (equipment and panel layout) shall be uniform for common functions of all equipment. Criterion for selecting off-the-shelf commercial or Government equipment shall be the degree to which the equipment conforms to this standard. Where off-the-shelf equipment requires modification in order to interface with other equipment, the modification shall be designed to comply with the criteria herein. Redesign of off-the-shelf equipment must have the approval of the procuring activity.

4.3 Function allocation. Design shall reflect allocation of functions to personnel, equipment, and personnel-equipment combinations to achieve:

a. required sensitivity, precision, time, and safety,

b. required reliability of system performance,

c. minimum number and level of skills of personnel required to operate and maintain the system,

d. required performance in a cost-effective manner,

e. minimum work-around requirements.

4.4 Human engineering design. Design shall reflect human engineering, life support, and biomedical factors that affect human performance, including, when applicable:

a. satisfactory atmospheric conditions including composition, pressure, temperature and humidity, including safeguards against uncontrolled variability beyond acceptable limits;

b. range of acoustic noise, vibration, acceleration, shock, blast, and impact forces and safeguards against uncontrolled variability beyond safe limits;

c. protection from thermal, toxicological, radiological, mechanical, electrical, electromagnetic, pyrotechnic, visual, and other hazards;

d. adequate space for personnel, their equipment, and free volume for the movements and activities they are required to perform during operation and maintenance tasks under both normal and emergency conditions;

e. adequate physical, visual, auditory, and other communication links between personnel, and between personnel and their equipment, under both normal and emergency conditions;

Downloaded from http://www.everyspec.com on 2010-01-26T2:50:27.

f. efficient arrangement of operation and maintenance workplaces, equipment, controls, and displays;

g. provisions for ensuring safe, efficient task performance under reduced and elevated gravitational forces with safeguards against injury, equipment damage and disorientation;

h. adequate natural or artificial illumination for the performance of operation, control, training, and maintenance;

i. safe and adequate passageways, hatches, ladders, stairways, platforms, inclines, and other provisions for ingress, egress, and passage under normal, adverse, and emergency conditions;

j. provision of acceptable personnel accommodations including body support and restraint, seating, rest, and sustenance, i.e., oxygen, food, water, and waste management;

k. provision of non-restrictive personal life support and protective equipment;

l. provisions for minimizing psychophysiological stress effects of mission duration and fatigue;

m. design features to assure rapidity, safety, ease and economy of operation and maintenance in normal, adverse and emergency maintenance environments;

n. satisfactory remote handling provisions and tools;

o. adequate emergency systems for contingency management, escape, survival and rescue;

p. compatibility of the design, location and layout of controls, displays, workspaces, maintenance accesses, stowage provisions, passenger compartments, allocated tasks, and control movements with the clothing and personal equipment to be worn by personnel operating, riding in, or maintaining military systems or equipment;

q. design of work stations should be considered in all human-machine interfaces for operation on the move, where applicable.

4.5 Fail safe design. A fail safe design shall be provided in those areas where failure can cause catastrophe through damage to equipment, injury to personnel, or inadvertent operation of critical equipment.

4.6 Simplicity of design. The equipment shall represent the simplest design consistent with functional requirements and expected service conditions. It shall be capable of being operated, maintained, and repaired in its operational environment by personnel with a minimum of training.

4.7 Interaction. The design of the system shall reflect the interaction requirements of crew served equipment.

4.8 Safety. Design shall reflect applicable system and personnel safety factors, including minimizing potential human error in the operation and maintenance of the system, particularly under the conditions of alert, battle stress, or other emergency or non-routine conditions. Design of non-military-unique workplaces and equipment shall conform to OSHA standards unless military applications require more stringent limits (e.g., maximum steady-state noise in personnel-occupied areas).

4.9 Ruggedness. Systems and equipment shall be sufficiently rugged to withstand handling in the field during operation, maintenance, supply, and transport within the environmental limits specified for those conditions in the applicable hardware or system specification.

Downloaded from http://www.everyspec.com on 2010-01-26T2:50:27.

4.10 Design for NBC survivability. As applicable, equipment design shall be compatible with NBC protection and shall permit performance of mission-essential operations, communications, maintenance, resupply and decontamination tasks by suitably clothed, trained, and acclimatized personnel for the survival periods and NBC environments required by the system. Equipment design shall also facilitate NBC hardness surveillance and shall minimize susceptibility to reduction of inherent NBC hardness as a result of operator- or maintainer-induced errors/damage, i.e.:

a. NBC hardness shall be easily verifiable by maintenance personnel before and after maintenance actions (hardness surveillance).

b. NBC hardness shall not be degraded when routine (scheduled) and corrective (unscheduled) maintenance are performed.

c. Maintenance of the equipment's inherent NBC hardness shall not be dependent on maintenance personnel expertise and critical alignments/maintenance actions.

4.11 Design for electromagnetic pulse (EMP) hardening. As applicable, equipment design shall be compatible with EMP hardening requirements, including personal accommodations such as EMP-hardened electrical power outlets and antenna lead-ins within EMP-hardened facilities or spaces. Access shall be provided to EMP-hardened facilities or spaces without the need to open doors or hatches which form part of an electromagnetic barrier protecting the space. Items such as surge arrestors, terminal protection devices, and filters, which form part of an electromagnetic barrier for protection against EMP effects, shall be accessible.

4.12 Automation. Functions shall be automated only to attain greater overall effectiveness, efficiency, reliability, simplicity, economy, and system safety rather than relying on human performance alone. Irrespective of the level of automation, system and task design shall ensure that the human operator is in command, involved in ongoing operations, and appropriately informed to maintain awareness of the situation and other status of automated functions. When used, automated functions shall be predictable, offer the operator an appropriate range of options, monitor operator actions to minimize, resist, and tolerate errors, and be capable of being overridden by the operator in an emergency.

4.13 Functional use of color. Where not in conflict with color codes specified herein, colors used for functional purposes (e.g., visual displays, controls, workspaces, equipment connections), shall accommodate users with color deficient vision.

4.14 Design of aircrew systems. As specified by the contract.

Downloaded from http://www.everyspec.com on 2010-01-26T2:50:27.

5. DETAILED REQUIREMENTS

5.1 Control-display integration.

5.1.1 General criteria.

5.1.1.1 Relationship. The relationships of a control to its associated display and the display to the control shall be immediately apparent and unambiguous to the operator. A control should be located adjacent to (normally below or to the right of) its associated display and positioned so that neither the control nor the hand normally used for setting the control will obscure the display.

5.1.1.2 Design. Control-display relationships shall be apparent through proximity, similarity of groupings, coding, framing, labeling, and similar techniques.

5.1.1.3 Complexity and precision. The complexity and precision required for manipulating controls and monitoring displays shall be consistent with the precision required of the system. Control-display complexity and precision shall not exceed the operator's capability to discriminate display detail or manipulate controls (in terms of manual dexterity, coordination or reaction time) under the dynamic conditions and environment in which human performance is expected to occur.

5.1.1.4 Feedback. There should be no discernible time lag between a change in a system condition being controlled or monitored and its indication on a display. If there is a time lag between control actuation and ultimate system state, the system should provide immediate feedback to the user of the process and direction of parameter change. Feedback shall be intrinsic or extrinsic to indicate (without ambiguity, uncertainty, or error) to the operator that the control is properly actuated, that the desired response is achieved, and when the desired response is complete. Critical control functions, such as those entered by keyboard, shall provide feedback to the operator prior to entry to ensure that the keyed entry is errorless and is the one that the operator desires to enter.

5.1.1.5 Illumination. Adjustable illumination shall be provided for visual displays (including display, control, and panel labels and critical markings) that must be read under darkened conditions.

5.1.1.6 Simultaneous access. If more than one crew member must have simultaneous access to a group of controls or displays to ensure proper functioning of a system or subsystem, each operator assigned to control and monitor a function or group of related functions shall have physical and visual access to all controls, displays, and communication capability necessary to adequately perform the assigned tasks.

5.1.2 Position relationships.

5.1.2.1 Functional grouping. Functionally related controls and displays shall be located close to each other and arranged in functional groups, e.g., power, status, and test.

5.1.2.1.1 Functional group arrangement.

5.1.2.1.1.1 Sequence. Functional groups of controls and displays shall be located to provide for left-to-right (preferred) or top-to-bottom order of use, or both.

5.1.2.1.1.2 Access. Provided that the integrity of grouping by function and sequence is not compromised, the more frequently used groups and the most important groups should be located in areas of easiest access. Control-display groups required solely for maintenance purposes shall be located in positions providing a lesser degree of access relative to operating groups.

5.1.2.1.1.3 Functional group marking. Functional groups may be set apart by outlining them with contrasting lines which completely encompass the groups. Where such coding is specified by the

Downloaded from http://www.everyspec.com on 2010-01-26T2:50:27.

procuring activity, and where gray panels are used, noncritical functional groups (i.e., those not associated with emergency operations) shall be outlined with a 1.5 mm (1/16 in) black border (27038 of FED-STD-595), and those involving emergency or extremely critical operations shall be outlined with a 5 mm (3/16 in) red border (21136 of FED-STD-595). As an alternate method, contrasting color pads or patches may be used to designate both critical and noncritical functional areas, subject to prior approval by the procuring activity. When red compartment lighting is used, an orange-yellow (23538 of FED-STD-595) and black (27038 of FED-STD-595) striped border shall be used to outline functional groups involving emergency or extremely critical operations. Control-display areas in aircraft crew stations shall be delineated in accordance with MIL-M-18012.

5.1.2.1.1.4 Consistency. The location of recurring functional groups and individual items shall be similar from panel to panel. Mirror image arrangements shall not be used.

5.1.2.1.1.5 Display commonality. When multiple displays and multiple display formats are used, nomenclature and symbology should be common on all displays, as appropriate. Text or readout fields, common to all displays, (e.g., system advisories) should be in a standard location on all display panels and formats.

5.1.2.2 Location and arrangement. If an operator or maintainer must use many controls and displays, they shall be located and arranged to aid in identifying the controls used with each display, the equipment component affected by each control, and the equipment component described by each display.

5.1.2.3 Arrangement within groups. Controls and displays within functional groups shall be located according to operational sequence or function, or both. If the controls and displays within a functional group are not used in any specific operational sequence, they should be arranged either in accordance with their importance or their frequency of use, with the most important or frequently used controls in the most accessible locations.

5.1.2.3.1 Left-to-right arrangement. If controls must be arranged in fewer rows than their associated displays, controls that affect the top row of displays shall be positioned at the left; controls that affect the second row of displays shall be placed immediately to the right of these, etc.

5.1.2.3.2 Vertical and horizontal arrays. If a horizontal row of displays is associated with a vertical column of controls or vice versa, the left item in the horizontal array shall correspond to the top item in the vertical array, etc. However, this type of arrangement should be avoided.

5.1.2.3.3 Simultaneous use. To maintain legibility and avoid parallax errors, a visual display that must be monitored while a related control is manipulated shall be located so that the user is not required to observe the display from an extreme visual angle.

5.1.2.3.4 Multiple displays. If manipulating one control requires reading of several displays, the control shall be placed as near as possible to the related displays and preferably beneath the middle of the displays, but not so as to obscure displays when manipulating the control. If one of a group of displays is selected for viewing with a rotary selector switch, the displays shall be arranged so that their sequence corresponds to the switch positions. If the switch includes an OFF position, the OFF position shall be to the left of the first active position (that is, it shall be the most counter-clockwise position). If applicable, displays that are not selected shall read off-scale, not zero.

5.1.2.3.5 Combined control. Separate displays that are affected by a combined control (e.g., concentrically ganged knobs) shall be arranged from left to right with the combined control underneath the center of the displays, but not in a location that will obscure the displays when manipulating the control. Controls should be located so that the operator's hand or arm does not obscure the associated display.

Downloaded from http://www.everyspec.com on 2010-01-26T2:50:27.

5.1.2.3.6 Separated controls and displays. When controls must be located on panels separate from their associated displays, the control and display panels should be adjacent to each other, mounted at approximately the same direction relative to the operator—the preferred arrangement is to place the display panel above the control panel. The two panels shall not be mounted facing each other. The control positions on one panel shall correspond to the associated display positions on the other panel.

5.1.2.3.7 Component groups. When a group of equipment components has the same function, the related control and display positions shall be oriented to correspond to those of the controlled and monitored components. (For example, the position of aircraft engine controls shall be oriented for an operator facing the normal direction of vehicle movement.)

5.1.2.3.8 Emergency use. Emergency displays and controls shall be located where they can be seen and reached without delay (e.g., warning lights within a 30° cone about the operator's normal line of sight (see Figure 1); an emergency control close to its related warning display, or use of the nearest available hand in its nominal operating position).

5.1.2.3.9 Correspondence with equipment arrangement. If applicable, the arrangement of controls and displays shall correspond to the physical arrangement of their associated units or equipment components.

5.1.3 Movement relationships.

5.1.3.1 Lack of ambiguity. Display indicators shall clearly and unambiguously direct and guide the appropriate control response. The response of a display to control movements shall be consistent, predictable, and compatible with the operator's expectations.

5.1.3.2 Display response time. The time lag between system response to a control input and display presentation of that response shall be minimized, consistent with safe and effective system operation.

5.1.3.3 Moving-pointer circular scales. Clockwise movement of a rotary control, or forward, upward or rightward movement of a linear control shall produce a clockwise movement of circular scale pointers and an increase in the magnitude of the setting.

5.1.3.4 Moving-pointer linear scales. Clockwise movement of a rotary control or forward, upward, or rightward movement of a linear control shall produce a movement up or to the right for horizontal and vertical scale pointers and an increase in the magnitude of the reading.

5.1.3.5 Fixed-pointer circular scale. Displays with moving scales and fixed pointers or cursors should be avoided. When circular, fixed-pointer, moving-scale indicators are necessary, clockwise movement of a rotary control, or forward, upward, or rightward movement of a linear control shall normally produce a counterclockwise movement of the scale and an increase in the magnitude of the reading.

5.1.3.6 Fixed-pointer linear scale. When use of vertical or horizontal fixed-pointer, moving-scale indicator is necessary, clockwise movement of an associated rotary control or forward, upward, or rightward movement of a linear control shall normally produce a movement of the scale down or to the left and an increase in the magnitude of the reading.

5.1.3.7 Digital displays. Clockwise movement of a rotary control or movement of a linear control forward, up, or to the right shall produce increasing values in digital displays.

Downloaded from http://www.everyspec.com on 2010-01-26T2:50:27.

5.1.3.8 Direct linkage. When a control and display are directly linked (e.g., radio frequency selector and station pointer), a rotary control shall be used if the indicator moves through an arc of more than 180°. If the indicator moves through an arc of less than 180°, a linear control may be used, provided that the path of control movement parallels the average path of the indicator movement and that the indicator and control move in the same relative direction.

5.1.3.9 Common plane. Direction of control movements shall be consistent with related movements of associated displays, equipment components, or vehicles.

5.1.3.10 Parallel movement. Direction-of-movement relationships shall be adhered to when control and display are parallel in line of movement.

5.1.3.11 Labeling. When control-display relationships specified herein cannot be adhered to, controls shall be clearly labeled (see para 5.5) to indicate the direction of control movement required.

5.1.3.12 Movement direction. When a rotary control and a linear display are in the same plane, the part of the control adjacent to the display shall move in the same direction as the moving part of the display.

5.1.3.13 Arrays of indicator lights. A bottom-to-top or left-to-right movement in an array of indicator lights should represent increasing values.

5.1.4 Control/display movement ratio.

5.1.4.1 Minimization of time. Control/display ratios for continuous adjustment controls shall minimize the time required to make desired control movements (slewing and fine adjusting), consistent with display size, tolerance requirements, viewing distance, and time delays.

5.1.4.2 Range of display movement. When a wide range of display element movement is required, a small movement of the control shall yield a large movement of the display element. When a small range of display movement is required, a large movement of the control shall result in a small movement of the display, consistent with the final accuracy required.

5.1.4.3 Knob, coarse setting. When a knob is provided for making coarse display element settings on linear scales— 0.4 to 2.5 mm (0.016 to 0.100 in) tolerance—approximately 150 mm (6 in) display element movement shall be provided for one complete turn of the knob.

5.1.4.4 Knob, fine setting. For fine setting on linear scales—0.2 to 0.4 mm (0.008 to 0.016 in) tolerance—25 to 50 mm (1 to 2 in) of display element movement shall be provided for one complete turn of the knob.

5.1.4.5 Bracketing. When bracketing is used to locate a maximum or minimum rather than a specific value, the control knob shall swing through an arc of not less than 10° nor more than 30° on either side of the target value in order to make the peak or dip associated with that value clearly noticeable.

5.1.4.6 Lever, coarse setting. When a lever is provided for coarse settings—0.4 to 2.5 mm (0.016 to 0.100 in) tolerance—one unit of display element movement shall be induced by three units of lever movement.

5.1.4.7 Lever, two-dimensional setting. When a lever is provided to make settings in two dimensions to coarse tolerances—2.5 mm (0.1 in)—one unit of display element movement shall be induced by two and one-half units of lever movement.

Downloaded from http://www.everyspec.com on 2010-01-26T2:50:27.

5.1.4.8 Counter control/display ratio. One revolution of a counter knob should produce approximately 50 counts (i.e., the right hand drum rotates five times).

5.1.4.9 Visual Display Terminals (VDTs). See 5.15.

5.1.5 Signal precedence. Each of the following signals shall take precedence over those below them:

a. Emergency action
b. Critical warning
c. Warning
d. Caution
e. Informational signal

Downloaded from http://www.everyspec.com on 2010-01-26T2:50:27.

5.2 Visual displays. (For U/CI and VDT displays, see 5.14 and 5.15, respectively. General visual display requirements and guidelines of 5.14 and ANSI/HFS-100 apply to this sub-section.)

5.2.1 General. Visual displays should be used to provide the operator with a clear indication of equipment or system conditions for operation under any eventuality commensurate with the operational and maintenance philosophy of the system under design.

5.2.1.1 Warning/caution. A warning/caution display shall provide the operator with a greater probability of detecting the triggering condition than normal observation would provide in the absence of the display.

5.2.1.1.1 Use. Visual danger signals (i.e., warnings and cautions) should be used to alert the operator that a specific condition exists and to inform the operator about the nature and priority of the condition.

5.2.1.1.2 Characteristics. Danger signal displays should be clearly noticeable under all anticipated lighting conditions, be conspicuously different from general area lighting, and have a specific meaning within the operational area where they are used.

5.2.1.1.3 Signal integration. Visual warnings, cautions, and advisories should be integrated with those presented using other sensory modalities (e.g., auditory, tactile).

5.2.1.1.4 Priority coding. To establish the priority of visual signals, discriminatory characteristics such as flashing, color, shape, symbols, color contrast, size, luminance contrast, and location should be used.

5.2.1.1.4.1 Warning signals. Visual warning signals should be presented using flashing red with flash frequency between 3 and 5 Hz with a 50% duty cycle. The flash rate for all such warning signals shall be synchronized. If used in conjunction with caution signals, warning signals should be coded to be easily distinguished from caution signals.

5.2.1.1.4.2 Caution signals. Visual caution signals should be yellow. A minimum of two discriminatory characteristics should be employed to ensure rapid identification and interpretation of caution signals. If used in conjunction with warning signals, caution signals should be not more than half the intensity of the warning signal. If cautions take the form of flashing text, the text should flash at a rate not greater than 2 Hz with ON/OFF interval of about 70% on.

5.2.1.1.5 Text height. Text for visual warning and caution signals should be presented using characters between 8.7 - 17.4 mrad (30 and 60 minutes of subtended arc) as measured from the longest anticipated viewing distance, with the larger size used where conditions may be adverse.

5.2.1.1.6 Co-location. Warning signals and the information required to respond to them should be grouped in a single location. When textual information about warning conditions are listed in a single location warnings and caution information should be grouped separately and the operator or maintainer should have the option to list warning and caution messages in priority, chronological or recency order.

5.2.1.1.7 Additional warnings. Additional warnings should be indicated by redundant means.

5.2.1.2 Display illumination and light distribution.

5.2.1.2.1 Display illumination.

Downloaded from http://www.everyspec.com on 2010-01-26T2:50:27.

5.2.1.2.1.1 Normal. When maximum dark adaptation is not required, low brightness white light (preferably integral and adjustable as appropriate) shall be used; however, when maximum dark adaptation is required, low luminance [0.07 - 0.35 cd/m^2 (0.02 - 0.10 ft-L)] red light (greater than 620 nm) shall be provided.

5.2.1.2.1.2 Night vision device compatibility. Where night vision device compatibility is required, the spectral output of all light emitting from or illuminating a display should be not greater than 600 nm in wavelength. The lighting shall be continuously variable to the full OFF position. In the OFF position, no current shall flow through the lamps.

5.2.1.2.1.3 Field use panel dimming. When control or annunciator panels will be viewed out of doors at night, maximum panel illumination shall be provided when a dimming rotary control is at its extreme clockwise rotation. Maximum illumination is that required by Tables XV and XVI, as applicable. No panel lighting current shall flow when the dimming control is at its extreme counter-clockwise rotation. Panel light levels shall be continuously variable from 0.1 cd/m^2 (0.03 ft-L) near OFF to 3.5 cd/m^2 (1 ft-L) at 50% of clockwise rotation.

5.2.1.2.1.4 Blackout discipline. Where operational security or survivability requires blackout discipline, the use of permanently illuminated outdoor displays should be avoided and illumination of displays within personnel enclosures should automatically switch off when doors to the enclosure are opened.

5.2.1.2.2 Light distribution. External illumination on a group of displays shall vary not more than 3:1 between the brightest and the darkest area. Self-luminous displays shall have either individually adjustable luminance or be visibly uniform over the range of luminance settings normally used.

5.2.1.2.3 Contrast. Sufficient contrast shall be provided between all displayed information and the display background to ensure that the required information can be perceived by the operator under all expected lighting conditions.

5.2.1.3 Information.

5.2.1.3.1 Content. Information displayed to an operator shall be sufficient to allow the operator to perform the intended mission, but shall be limited to information necessary to perform specific actions or to make decisions.

5.2.1.3.2 Precision. Information shall be displayed only within the limits and precision required for specific operator actions or decisions.

5.2.1.3.3 Format. Information shall be presented to the operator in a directly usable form. Requirements for transposing, computing, interpolating, or mentally translating into other units shall be avoided. For computer display formats, see 5.14.

5.2.1.3.4 Redundancy. Redundant information shall not be displayed to a single operator unless it is required to achieve specified reliability.

5.2.1.3.5 Combining operator/maintainer information. Operator and maintainer information shall not be combined in a single display unless the information content, format, and timeliness support the needs of both users.

5.2.1.3.6 Display failure clarity. Failure of a display or other parts of the display subsystem shall be immediately apparent to the operator.

Downloaded from http://www.everyspec.com on 2010-01-26T2:50:27.

5.2.1.3.7 Display subsystem failure. Failure of the display subsystem shall not cause a failure in the equipment associated with the display.

5.2.1.3.8 Unrelated markings. Trademarks and company names or other similar markings not related to the panel function shall not be displayed on the panel face.

5.2.1.3.9 Duration. Signals and information shall be displayed long enough for reliable detection under expected operator workload and operational environment.

5.2.1.3.10 Timeliness. Displays requiring refreshed information (e.g., cathode ray tube displays, head-up displays) shall be updated in a synchronous manner, where possible, and be refreshed at a rate required by personnel in the normal operating or servicing mode.

5.2.1.3.11 Advisory and alerting. Devices displaying simultaneous and integrated information (e.g., multifunction displays, cathode ray tube displays, head-up displays, collimated displays) shall alert or cue operating personnel to information that becomes critical within the display.

5.2.1.3.12 NBC contamination. As applicable, display characteristics (e.g., legibility) shall be compatible with viewing while wearing an NBC protective mask. Displays or indicators that show the presence of NBC agents shall also show when such agent concentrations decrease to safe levels.

5.2.1.3.13 Numeric digital displays. Numeric digital displays should be used when precision of displayed information is important, but shall not be used as the only display of information when the pattern of variation is important for accurate perception or when rapid or slow digital display rates inhibit accurate perception.

5.2.1.3.14 Units. Displays of quantitative information shall include units of measure.

5.2.1.4 Location and arrangement.

5.2.1.4.1 Location. Displays shall be located and designed so that they may be read to the required degree of accuracy by personnel in their normal operating or servicing positions without need to assume uncomfortable, awkward, or unsafe postures.

5.2.1.4.2 Access. Visual displays should be visually accessible without resorting to use of ladders, flashlights, or other special equipment in order to read the display.

5.2.1.4.3 Orientation. Display faces shall be perpendicular to the operator's normal line of sight whenever feasible and shall be not less than 45° from the normal line of sight (see Figure 1). Parallax shall be minimized.

5.2.1.4.4 Reflection. Displays shall be constructed, arranged, and mounted to prevent reduction of information transfer due to reflection of the ambient illumination from the display cover. Reflection of instruments and consoles in windshields and other enclosures shall be avoided. If necessary, techniques (such as use of shields and filters) shall be employed to ensure that system performance will not be degraded.

5.2.1.4.5 Vibration. Vibration of visual displays or of observers shall not degrade user performance below the level required for mission accomplishment (see 5.8.4).

5.2.1.4.6 Grouping. All displays necessary to support an operator activity or sequence of activities, shall be grouped together.

Downloaded from http://www.everyspec.com on 2010-01-26T2:50:27.

5.2.1.4.7 Function and sequence. Displays shall be arranged in relation to one another according to their sequence of use or the functional relations of the components they represent. Whenever possible, displays shall be arranged in sequence within functional groups to provide a viewing flow from left-to-right or top-to-bottom. This requirement does not apply to master warning, caution, or advisory indicators (see 5.2.2.1.5).

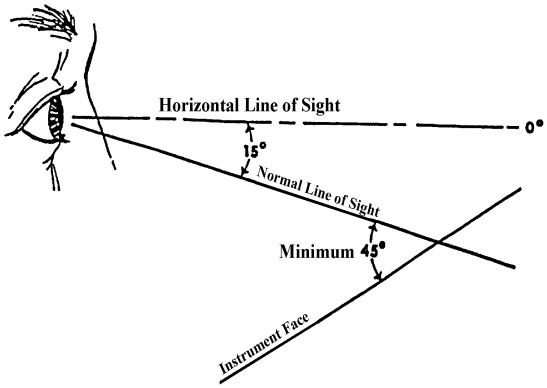

FIGURE 1. **Lines of sight**

5.2.1.4.8 Frequency of use. Displays used most frequently should be grouped together and placed in the optimum visual zone (see Figure 2).

5.2.1.4.9 Importance. Important or critical displays shall be located in a privileged position in the optimum projected visual zone or otherwise highlighted.

5.2.1.4.10 Consistency. The arrangement of displays within a system shall be consistent in principle from application to application, within the limits specified herein.

5.2.1.4.11 Maximum viewing distance. The viewing distance from the eye reference point of the seated operator to displays located close to their associated controls shall not exceed 64 cm (25 in). (See Table I.) Otherwise, there is no maximum limit other than that imposed by legibility limitations, which shall be compensated for by proper design. NOTE: A viewing distance of up to 76 cm (30 in) may be used with ejection seats.

5.2.1.4.12 Minimum viewing distance. The effective viewing distance to displays, with the exception of cathode ray tube displays (see 5.2.4) and collimated displays, shall be not less than 330 mm (13 in) and preferably not less than 510 mm (20 in).

5.2.1.4.13 Maintenance displays. Indicator lights used solely for maintenance and adjustment shall be covered or non-visible during normal equipment operation, but shall be readily accessible when required.

5.2.1.4.14 Aircrew station signals. In accordance with JSSG 2010.

5.2.1.5 Coding.

Downloaded from http://www.everyspec.com on 2010-01-26T2:50:27.

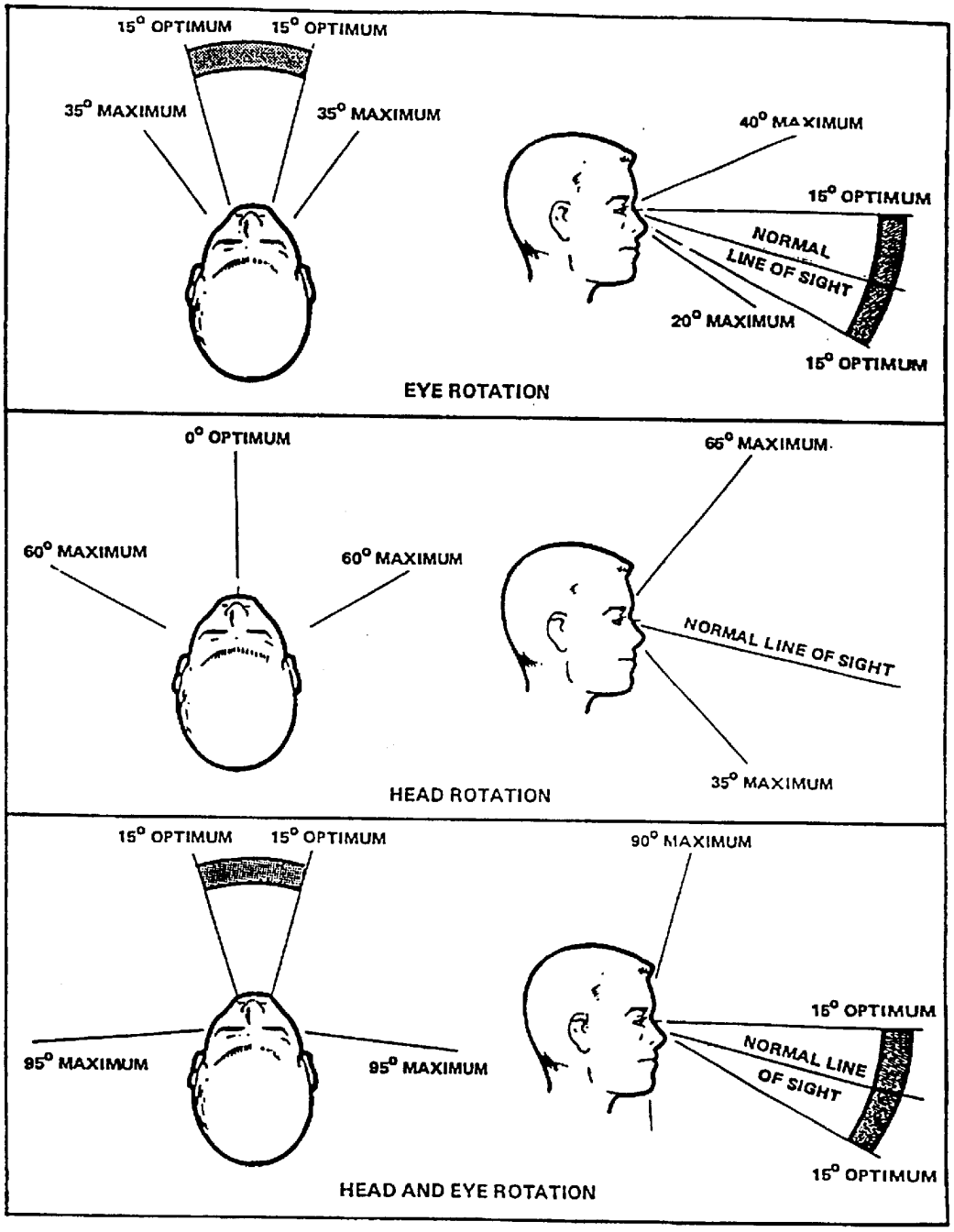

FIGURE 2. **Vertical and horizontal visual fields**

Downloaded from http://www.everyspec.com on 2010-01-26T2:50:27.

5.2.1.5.1 Objectives. Coding shall be used to facilitate discriminating between individual displays, identifying functionally related displays, recognizing the relationship between displays, identifying critical information within a display, and to preserve conventional practices and arrangements for warning and alerting systems.

5.2.1.5.2 Techniques. Displays shall be coded by color, brightness, flash, size, location, or shape, as applicable. For computer-generated visual displays, see 5.14.3.3.

5.2.1.5.3 Standardization. All coding within the system shall be uniform and shall be established by agreement with the procuring activity.

5.2.1.5.4 Aircrew Display Symbology. In accordance with JSSG 2010.

5.2.1.5.5 Flash coding.

5.2.1.5.5.1 Use. Flash coding may be used to emphasize certain information relative to other information.

5.2.1.5.5.2 Duty cycle. The percentage of "on" time should be equal to but not less than the percentage of "off" time. A 50% duty cycle is preferred.

5.2.1.5.5.3 Flash rate. No more than two flash rates should be used and they shall differ by not less than 2 Hz. The higher flash rate shall reflect the more critical information and should be not greater than 5 Hz. The slower flash rate shall be not less than 0.8 Hz. If possible, flashing should be synchronized.

5.2.1.5.5.4 Text. Characters that must be read should not flash. Emphasis should be added by an adjacent flashing symbol or flashing background.

5.2.1.5.5.5 Flash suppression. Event acknowledgment or flash suppression control should be provided.

5.2.1.5.5.6 Flashing area. Only a small area of a display should flash at any time.

5.2.1.5.5.7 Flasher device failure. If the display is energized and the flasher device fails, the light shall illuminate and burn steadily.

5.2.1.5.6 Color coding.

5.2.1.5.6.1 Use. Color coding requirements and guidelines for specific displays are specified in paragraphs covering such displays. Where applied elsewhere, color coding should be used consistently and sparingly within a display and across displays within an application. Color shall not be used for gaining attention outside the optimum visual field (see Figure 2). Color customization, shall be allowed only for information that is not tactically significant.

5.2.1.5.6.2 Color selection. Unobtrusive colors should be used to display information used infrequently. Warm colors (those with longer wavelengths, such as red or orange) should be used to convey action or the requirement for a response. Cool colors (those with shorter wavelengths such as blue or green) should be used to convey status of background information. To avoid mismatch of color and color association that can slow recognition time and increase errors, each color should represent only one category of displayed data. To maximize discriminability, colors having the following dominant wavelengths (or others as widely spaced along the visible color spectrum) should be used:

Downloaded from http://www.everyspec.com on 2010-01-26T2:50:27.

a. Red (700 nm)
b. Orange (600 nm)
c. Yellow (570 nm)
d. Yellow-green (535 nm)
e. Green (500 nm)
f. Blue-green (493 nm)
g. Blue (470 nm)

Wavelengths above 650 nm should be avoided if users include protanopes.

5.2.1.5.6.3 Dark adaptation. When color coding is used, luminance shall be not no more than 10 cd/m^2 (3 ft-L).

5.2.1.5.6.4 Color contrast. Colored symbols shall differ from their color background by not less than 100 D E (CIE L*u*v) distances.

5.2.1.5.6.5 Color differences. Colors in a set shall differ from one another by not less than 20 D E (CIE L*u*v) distances.

5.2.1.5.6.6 Object size. When accurate color perception is required, the major dimension of isolated large symbols shall subtend not less than 8.7 mrad (30 min) of visual angle, preferably 13.1 mrad (45 min). The height of small symbols and characters shall subtend at least 5.8 mrad (20 min) of visual angle, as measured from the longest anticipated viewing distance, and should have a color contrast ratio not less than 1:5.

5.2.1.6 Electronic displays. In addition to applicable provisions in 5.2.5.1.5, 5.2.4, and 5.14, the following shall apply to electronic displays.

5.2.1.6.1 Viewing distance. A 50 cm (20 in) viewing distance should be provided. When periods of display observation will be short, or when dim signals must be detected, the viewing distance may be reduced to 25 cm (10 in). Design should permit the observer to view the display from as close as desired. Displays which must be placed at viewing distances greater than 50 cm (20 in) due to other considerations shall be appropriately modified in aspects such as display size, symbol size, brightness ranges, and resolution.

5.2.1.6.2 Luminance considerations

5.2.1.6.2.1 Luminance range. The display luminance adjustability (highest to lowest) range should be not less than 50:1.

5.2.1.6.2.2 Reflected glare. Reflected glare shall be eliminated or minimized by proper placement of the display screen relative to the light source; use of a hood or shield; providing adjustable height, viewing angle or contrast; using a first surface treatment to minimize specular reflections; providing a filter control over the light source; or other appropriate methods.

5.2.1.6.2.3 Adjacent surfaces. Surfaces adjacent to the display screen shall have a matte finish.

5.2.1.6.2.4 Faint signals. When the detection of faint signals is required and when the ambient illuminance may be above 2.7 lux (0.25 ft-c), displays shall be hooded, shielded, or recessed. (A suitable filter system may be employed.)

5.2.1.6.3 Geometric stability (jitter). Over a period of one second, the movement of a picture element shall be not greater than 0.2 mrad (41 sec) of visual angle.

5.2.1.6.4 Character/signal characteristics

Downloaded from http://www.everyspec.com on 2010-01-26T2:50:27.

5.2.1.6.4.1 Character height. As measured from the greatest anticipated viewing distance, the visual angle subtended by height of black-and-white characters should be not less than 4.6 mrad (16 min) with 5.8 mrad (20 min) preferred; the visual angle subtended by height of colored characters should be not less than 6.1 mrad (21 min) with 8.7 mrad (30 min) preferred.

5.2.1.6.4.2 Character stroke width. Assuming that the character height conforms to 5.2.1.6.4.1, stroke width shall be not less than 1/12 nor greater than 1/6 the number of pixels used for character height.

5.2.1.6.4.3 Font characteristics. Font style shall allow discrimination of similar characters, e.g., letter l/number 1, letter Z/number 2. A common, standard font should be used. Where users must read quickly under adverse conditions (e.g., poor lighting), a sans serif style should be used. Text should contain a conventional mix of uppercase and lowercase letters. The use of all capital letters should be limited to abbreviations and acronyms.

5.2.1.6.4.4 Signal size and image quality. When a target of complex shape is to be distinguished from a non target shape that is also complex, the target signal should subtend not less than 6 mrad (20 min) of visual angle and should subtend not less than 10 lines of resolution elements. Image quality shall be consistent with the operator's needs.

5.2.1.6.5 Mechanical display representations. Images of scale indicators, digital indicators, signal devices and other display faces presented on electronic media (e.g., CRT, flat panel) shall conform to the requirements for the displays represented.

5.2.1.6.6 Use with individual protective equipment. Where operators may be required to use visual display while wearing NBC gear, displays should be designed for foveal vision under relatively high levels of illumination using symbols that subtend not less than 5.8 mrad (20 min) of visual angle. Displays in the peripheral field of view should only be used to attract attention.

5.2.2 Transilluminated displays.

5.2.2.1 General. General types of transilluminated displays that may be used include:

a. single- and multiple-legend lights that present information as words, numbers, symbols, and abbreviations,

b. simple indicator lights, and

c. transilluminated panel assemblies that present qualitative status or system readiness information.

5.2.2.1.1 Use. Transilluminated displays should be used to provide qualitative information to the operator requiring either an immediate reaction by the operator, or to draw attention to an important system status. Such displays may also be used occasionally for maintenance and adjustment functions.

5.2.2.1.2 Equipment response. Lights, including those used in illuminated push buttons, shall display equipment response and not merely control position.

5.2.2.1.3 Information. Lights and related indicators shall be used sparingly and shall display only that information necessary for effective system operation.

Downloaded from http://www.everyspec.com on 2010-01-26T2:50:27.

5.2.2.1.4 Positive feedback. Changes in display status shall signify changes in functional status rather than results of control actuation alone. The absence or loss of a signal or visual indication shall not be used to denote a “malfunction,” “no-go,” or “out-of-tolerance” condition; however, the absence of a “power on” signal or visual indication may be used to indicate a “power off” condition for operational displays, but not for maintenance displays. The absence or loss of a signal or visual indication shall not be used to indicate a "ready" or "in tolerance" condition, unless the status or caution light filament and its associated circuitry can be easily tested by the operator and operator perception of such events is not time critical.

5.2.2.1.5 Grouping. Master caution, master warning, master advisory and summation lights used to indicate the condition of an entire subsystem shall be set apart from the lights which show the status of the subsystem components, except as required by 5.2.1.4.13.

5.2.2.1.6 Location. When a transilluminated indicator is associated with a control, the indicator light shall be located so that it can be associated with the control without error and shall be visible to the operator during control operation.

5.2.2.1.7 Location, critical functions. For critical functions, indicators shall be located within 15° of the operator's normal line of sight (see Figure 2). Warning lights shall be an integral part of, or located adjacent to, the lever, switch, or other control by which the operator is to take action.

5.2.2.l.8 Luminance. The luminance of transilluminated displays shall be compatible with the expected ambient illuminance, and shall be at least 10% greater than the surrounding luminance. Where glare must be reduced, the luminance of transilluminated displays should be not more than 300% of the surrounding luminance.

5.2.2.1.9 Luminance control. When displays will be used under varied ambient illuminance, a dimming control shall be provided. The range of the control shall permit the displays to be legible under all expected ambient illuminance. The control shall be capable of providing multiple step or continuously variable illumination. Dimming to full OFF may be provided in non-critical operations, but shall not be used if inadvertent failure to turn on an indicator could lead to critical operator failures, i.e., failure to detect or perform a critical step in an operation.

5.2.2.1.10 False indication or obscuration. Direct or reflected light shall not make indicators appear illuminated when they are not, or appear extinguished when they are illuminated. Self-reflection shall be minimized by proper orientation of the display with respect to the observer.

5.2.2.1.11 Contrast within the indicator. The luminance contrast (See MIL-HDBK-1908) within the indicator shall be not less than 2.0. This requirement does not apply to special displays specifically designed for legibility in sunlight. For low ambient illumination applications, this ratio should be not less than 9.0, with the background luminance less than the figure luminance.

5.2.2.1.12 Transilluminated displays using incandescent illumination

5.2.2.1.12.1 Lamp redundancy. Incandescent light sources shall use dual lamps or lamps with two filaments. When one filament or bulb fails, the intensity of the light shall decrease sufficiently to indicate the need for lamp replacement, but not so much as to degrade operator performance.

5.2.2.1.12.2 Lamp testing. When indicator lights using incandescent bulbs are installed on a control panel, a master light test control shall be incorporated. When appropriate, the capability to simultaneously test all control panels may be provided. Panels containing three or fewer lights may incorporate individual press-to-test bulb testing. The total indicator circuit should be capable of being tested. If dark adaptation is a factor, a means for reducing total indicator light brightness during test operation shall be provided.

Downloaded from http://www.everyspec.com on 2010-01-26T2:50:27.

5.2.2.1.12.3 Lamp removal, method. Where possible, lamps shall be removable and replaceable from the front of the display panel. The procedure for lamp removal and replacement shall not require the use of tools and shall be easily and rapidly accomplished.

5.2.2.1.12.4 Lamp removal, safety. Display circuit design shall permit lamp removal and replacement while power is applied without causing failure of indicator circuit components or imposing personnel safety hazards.

5.2.2.1.12.5 Indicator covers. If the design of legend screen or indicator covers does not prevent inadvertent interchange, a means shall be provided for checking the covers after installation to ensure they are properly installed.

5.2.2.1.13 Color coding. With the exception of aircrew station and training equipment applications, transilluminated displays shall conform to the following color coding scheme, in accordance with Type I - Aviation colors of MIL-C-25050. Light transmitted by the color filters should be visible through laser protective (or other) eye wear required to be worn by the user.

a. FLASHING RED shall be used only to denote emergency conditions which require operator action to be taken without delay, or to avert impending personnel injury, equipment damage, or both.

b. RED shall be used to alert an operator that the system or any portion of the system is inoperative, or that a successful mission is not possible until appropriate corrective or override action is taken, e.g., “no-go,” “error,” “failure,” “malfunction.”

c. YELLOW shall be used to advise an operator that a condition exists which is marginal. YELLOW shall also be used to alert the operator to situations where caution, recheck, or unexpected delay is necessary.

d. GREEN shall be used to indicate that the monitored equipment is in tolerance or a condition is satisfactory and that it is all right to proceed (e.g., "in-tolerance", "ready", "function activated").

e. WHITE shall be used to indicate system conditions that do not have "right" or "wrong" implications, such as alternative functions (e.g., Missile No. 1 selected for launch) or transitory conditions (e.g., action or test in progress, function available), provided such indication does not imply success or failure of operations.

f. BLUE may be used for an advisory light, but preferential use of BLUE should be avoided.

*

5.2.2.2 Legend lights.

5.2.2.2.1 Use. Legend lights shall be used in preference to simple indicator lights except where design considerations demand that simple indicators be used.

5.2.2.2.2 Color coding. Legend lights shall be color coded in conformance with 5.2.2.1.13. Legend lights required to denote personnel or equipment disaster (FLASHING RED), caution or impending danger (YELLOW), or master summation no-go (RED) or go (GREEN) shall be discriminably larger, and preferably brighter, than all other legend lights.

5.2.2.2.3 Positive vs. negative legend. When the operator's dark adaptation must be maintained, or where legibility in high ambient illumination is critical, illuminated label/opaque background format shall be used and illuminated background/opaque label format shall be used only for critical alerting indicators (e.g., master warning lights). Where operator dark adaptation is not required, illuminated background/opaque label format should be used; contrast reversal may be employed under these conditions to designate displays which have physical appearance similar to legend switches on the same panel.

Downloaded from http://www.everyspec.com on 2010-01-26T2:50:27.

5.2.2.2.4 Lettering. The size and other characteristics of lettering shall conform to 5.5 herein.

5.2.2.2.5 Visibility and legibility. In other than aircrew stations, and with the exception of warning and caution indicators, the lettering on single-legend indicators shall be visible and legible whether or not the indicator is energized.

5.2.2.2.6 Multi-function legends. Indicators designed to provide alternately-presented legends shall present only one legend at a time, i.e., only the legend in use shall be visible. Indicators using "stacked" legends shall conform to the following:

a. When the rear legend is energized, it shall not be obscured by the front legend.
b. Parallax shall be minimized.
c. Front and rear legends shall have approximately equal brightness
d. Front and rear legends shall have approximately equal legend/background contrast.

5.2.2.3 Simple indicator lights.

5.2.2.3.1 Use. Simple indicator lights should be used when design considerations preclude the use of legend lights.

5.2.2.3.2 Spacing. The spacing between adjacent edges of simple round indicator light fixtures shall be sufficient to permit unambiguous labeling, signal interpretation, and convenient bulb removal.

5.2.2.3.3 Coding. Simple indicator lights shall be coded in conformance with Table II; however, the different sizes shown are intended only for the attention-getting value that larger lights of at least equal luminance provide in relation to indicator lights of lesser importance.

TABLE II. **Coding of simple indicator lights**

SIZE/TYPE	COLOR			
	RED	YELLOW	GREEN	WHITE
≥25 mm (1 in) FLASHING (3 to 5 sec)	Emergency condi-tion (impending personnel or equip-ment disaster).			
≥25 mm (1 in) STEADY	Master summation (system or subsystem)	Extreme caution (impending danger)	Master summation (system or subsystem)	
≤13 mm (1/2 in) STEADY	Malfunction; action stopped; failure; stop action.	Delay; check; recheck.	Go ahead; in tolerance; acceptable; ready.	Functional or physical position; action in progress

Downloaded from http://www.everyspec.com on 2010-01-26T2:50:27.

5.2.2.4 Transilluminated panel assemblies.

5.2.2.4.1 Use. Transilluminated (integrally lighted) panel assemblies may be used to provide:

a. illuminated labels for a control panel,

b. a light source for illuminating transilluminated control knobs,

c. illuminated association markings on a control panel (e.g., connecting lines between controls, outlines around a functionally-related group of controls or displays), or

d. a pictorial representation of a system process, communication network, or other information/component organization.

5.2.2.4.2 Large, single pictorial graphic panels. Large, single pictorial graphic panels, used to display system processing, communications networks, or similar applications, shall comply with requirements for visibility, legibility, color, and illumination as specified herein.

5.2.2.4.3 Re-lamping. When replaceable incandescent lamps are used for integral lighting, they shall be readily accessible without disconnecting the panel(s). A sufficient number of lamps shall be provided so that failure of one lamp will not cause any part of the display to be unreadable.

5.2.2.4.4 Brightness. Brightness of illuminated markings and transilluminated controls shall be compatible with the ambient environment and operating conditions (e.g., dark adaptation requirements). Brightness control (dimming) by the operator shall be provided where applicable to maintain appropriate visibility and operator dark adaptation level.

5.2.3 Scale indicators.

5.2.3.1 General.

5.2.3.1.1 Types of scale indicators. The types of scale indicators that may be used include:

a. Moving-pointer, fixed-scale, circular, curved (arc), horizontal straight, and vertical straight.

b. Fixed-pointer, moving-scale, circular, curved (arc), horizontal straight, and vertical straight.

5.2.3.1.2 Use. The use of scale indicators should conform to the criteria in Table III and this section. Moving-pointer, fixed-scale indicators are preferred to fixed-pointer, moving-scale indicators. The latter should be used only when necessitated by operational requirements or other conditions, and when approved by the procuring activity. Where reading speed is important, circular scales should be used in preference to horizontal scales or vertical scales, and horizontal scales should be used in preference to vertical scales.

5.2.3.1.3 Type of information. Scale indicators should be used to display quantitative information combined with qualitative information (such as trend and direction-of-motion) and where only quantitative information is to be displayed and there is no requirement (such as speed and accuracy of response) which demands the use of printers or counters.

5.2.3.1.4 Linear scales. Except where system requirements dictate nonlinearity to satisfy operator information requirements, linear scales shall be used in preference to nonlinear scales.

5.2.3.1.5 Scale markings.

TABLE III. **Application of various types of mechanical displays**

USE	SCALES		COUNTERS	PRINTERS	FLAGS
	Moving Pointer	Fixed Pointer			
QUANTITIATIVE INFORMATION	FAIR May be difficult to read while pointer is in motion.	FAIR May be difficult to read while scale is in motion.	GOOD Minimum time and error for exact numerical value; however, cannot be read when changing rapidly.	GOOD Minimum time and error for exact numerical value. Provides reference records.	N/A
QUALITATIVE INFORMATION	GOOD Location of pointer easy. Numbers and scale need not be read. Position change easily detected.	POOR Difficult to judge direction and magnitude of deviation without reading numbers and scale.	POOR Numbers must be read. Position changes not easily detected.	POOR Numbers must be read. Position change not easily detected.	GOOD Easily detected. Economical of space.
SETTING	GOOD Simple and direct relation of motion of pointer to motion of setting knob. Position change aids monitoring.	FAIR Relation to motion of setting knob may be ambiguous. No pointer position change to aid monitoring. Not readable during rapid setting.	GOOD Most accurate monitoring of numerical setting. Relation to motion of setting knob less direct than for moving pointer. Not readable during rapid setting.	N/A	N/A
TRACKING	GOOD Pointer position readily controlled and monitored. Simplest relation to manual control motion.	FAIR No position changes to aid monitoring. Relation to control motion somewhat ambiguous.	POOR No gross position changes to aid monitoring.	N/A	N/A
GENERAL	Requires largest exposed and illuminated area on panel. Scale length limited unless multiple pointers used.	Saves panel space. Only small section of scale need be exposed and illuminated. Use of tape allows long scale.	Most economical of space and illumination. Scale length limited only by number of counter drums.	Limited application.	Limited application.

Downloaded from http://www.everyspec.com on 2010-01-26T2:50:27.

Downloaded from http://www.everyspec.com on 2010-01-26T2:50:27.

5.2.3.1.5.1 Graduations. Scale graduations shall progress by 1, 2, or 5 units or decimal multiples thereof.

5.2.3.1.5.2 Intermediate marks. The number of minor or intermediate marks between numbered scale markers shall not exceed nine.

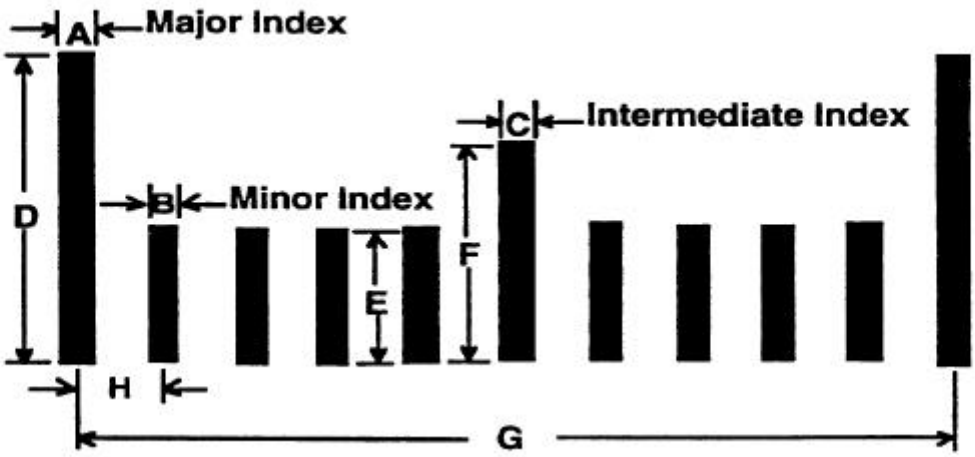

Dimensions of dark markers on light background, visual angle

A	Width of major scale index	1.16 mrad	(4 min)*
B	Width of minor scale index	0.87 mrad	(3 min)*
C	Width of intermediate scale index	1.16 mrad	(4 min)*
D	Length of major scale index	7.86 mrad	(27 min)
E	Length of minor scale index	3.49 mrad	(12 min)
F	Length of intermediate scale index	5.82 mrad	(20 min)
G	Width of gap between major scale index	25.02 mrad	(86 min)
H	Width of gap between minor scale index	2.62 mrad	(9 min)

*4.36 mrad (15 min) for light markers on dark background

NOTE: For most applications with a dark graduation mark on a light background, the width of the minor graduation mark can be used for major and intermediate graduation marks as well. Use of this strategy allows the width of the pointer tip to be the same as all of the graduation marks. Visual angles are for longest anticipated viewing distance.

FIGURE 3. **Scale marker dimensions**

Downloaded from http://www.everyspec.com on 2010-01-26T2:50:27.

5.2.3.1.5.3 Dimensions. Height, width, and gaps between scale markers should conform to Figure 3.

5.2.3.1.6 Numerals.

5.2.3.1.6.1 Major marks. Except for measurements that are normally expressed in decimals, whole numbers shall be used for major graduation marks.

5.2.3.1.6.2 Starting point. A display scale shall start at zero, except where this would be inappropriate for the function involved.

5.2.3.1.7 Pointers.

5.2.3.1.7.1 Length. The control or display pointer should extend to, but not overlap, the shortest scale graduation marks.

5.2.3.1.7.2 Tip configuration. The pointer tip should be tapered at a 20° angle (40° included angle), terminating in a flat tip equal in width to the minor scale graduations.

5.2.3.1.7.3 Mounting. The pointer shall be mounted as close as possible to the face of the dial to minimize parallax.

5.2.3.1.7.4 Color. Pointer color from the tip to the center of the dial shall be the same as the color of the marks. The tail of the pointer shall be the same color as the dial face, unless the tail is used as an indicator itself or unless the pointer is used for horizontal alignment.

5.2.3.1.8 Luminance contrast. A luminance contrast not less than 3.0 shall be provided between the scale face and the markings and pointer.

5.2.3.1.9 Calibration information. Provision shall be made for placing calibration information on instruments without degrading dial legibility.

5.2.3.1.10 Coding.

5.2.3.1.10.1 Use. Coding on the face of scale indicators may be used to convey such information as desirable operating range, inefficient operation, caution, and dangerous level.

5.2.3.1.10.2 Pattern- or color-coding. Operating conditions that always fall within a given range on the scale shall be made readily identifiable by applying pattern- or color-coding to that range.

5.2.3.1.10.3 Choice of colors. Red, yellow, and green may be applied, provided they conform to the meanings specified in 5.2.2.1.13 and are distinguishable under all expected lighting conditions.

5.2.3.1.10.4 Pattern coding. Zone scales may be shape coded when the indicator must be viewed in blackout conditions or where the illuminant color will cause difficulty in color band discrimination.

5.2.3.2 Moving-pointer, fixed-scale displays.

5.2.3.2.1 Numerical progression. Numeric values on fixed scales shall increase clockwise, from left to right, or from the bottom up, depending on display design and orientation.

Downloaded from http://www.everyspec.com on 2010-01-26T2:50:27.

5.2.3.2.2 Orientation. Numbers shall be oriented in the upright position.

5.2.3.2.3 Circular scales.

5.2.3.2.3.1 Scale reading and pointer movement. The magnitude of the scale reading shall increase with clockwise movement of the pointer.

5.2.3.2.3.2 Zero position and direction of movement.

a. Where only positive values are displayed and less than 360 degrees are used, the zero or minimum value should be in the area between 225 and 300 degrees and the maximum value should be in the area between 60 and 135 degrees, symmetrically arranged. Where only positive values are displayed over the complete 360 degrees, or when pointer movement exceeds 360 degrees (in conjunction with a second pointer or indicator), the zero or reference point shall be located at the top (0 degrees). The magnitude of values shall increase with clockwise movement of the pointer.

b. When positive and negative values are displayed around a zero or a null position, the zero or null point shall be located at either the top or at 270 degrees (12 and 9 o'clock). The magnitude of positive values shall increase with clockwise movement of the pointer; the magnitude of negative values shall
increase with counterclockwise movement.

5.2.3.2.3.3 Scale break. There shall be an obvious break of at least 10° of arc between the two ends of the scale, except on multirevolution instruments such as clocks.

5.2.3.2.3.4 Number of pointers. Whenever precise readings are required not more than two coaxial pointers shall be mounted on one indicator face.

5.2.3.2.3.5 Pointer alignment. When a common, stable value exists for given operating conditions in a group of indicators, the indicators shall be arranged either in rows so that all pointers line up horizontally on the 9 o'clock position under normal operating conditions or arranged in columns so that all pointers line up vertically in the 12 o'clock position under normal operating conditions. If a matrix of indicators is needed, preference shall be given to the 9 o'clock position.

5.2.3.2.3.6 Relative position of scale marks and numbers. When reading time and accuracy are critical, scale markings and the location of associated numbers shall be arranged to prevent pointers from covering any portion of the scale marks or numerals, and scale marks shall be on or close to the plane of the pointer tip to avoid visual parallax. If readout accuracy is not critical (i.e., gross relationship between the pointer and number is all that is required), an arrangement of numerals inside the scale annulus may be used. (See Figure 4).

5.2.3.2.4 Curved (arc), horizontal straight, and vertical straight scales.

5.2.3.2.4.1 Scale reading and pointer movement. The numeric value of the scale reading shall increase with movement of the pointer up or to the right.

5.2.3.2.4.2 Zero position and direction of movements. When positive and negative values are displayed around a zero point, the magnitude of positive values shall increase with movement of the pointer up or to the right, and the magnitude of negative values shall increase with movement of the pointer down or to the left.

5.2.3.2.4.3 Placement of pointers. Pointers shall be located to the right of vertical scales and at the bottom of horizontal scales.

Downloaded from http://www.everyspec.com on 2010-01-26T2:50:27.

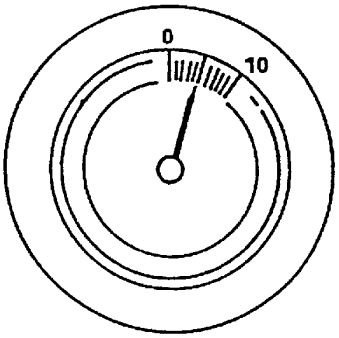

FOR MAXIMUM READING ACCURACY

(THE POINTER IS AN EQUAL DISTANCE – NOMINAL 0.8–1.6 mm (0.031–0.061 in.) – FROM ALL SCALE MARKS, NEVER OVERLAPPING ANY MARK OR NUMERAL.)

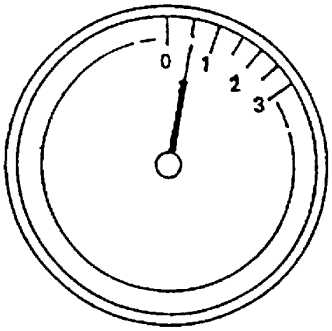

ALTERNATE FORMAT FOR GROSS READING OF NUMBERS

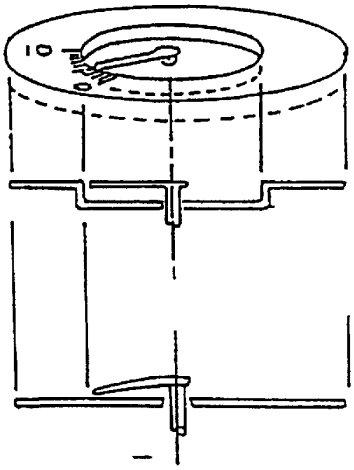

TO PREVENT OR MINIMIZE VISUAL PARALLAX

FIGURE 4. **Relative position of scale marks numerals, and pointers on circular dials**

Downloaded from http://www.everyspec.com on 2010-01-26T2:50:27.

5.2.3.2.4.4 Placement of numerals. Numerals shall be placed on the side of the graduation marks away from the pointer to avoid having numbers covered by the pointer. If space is limited (for curved or arc scales) numerals may be placed inside of graduation marks to avoid undue constriction of the scale.

5.2.3.2.4.5 Pointer alignment. When a common, stable value exists for given operating conditions in a group of indicators, they shall be arranged either in rows so that all pointers line up horizontally (for vertical scales) or in columns so that all pointers line up vertically (for horizontal scales).

5.2.3.3 Fixed-pointer, moving-scale displays.

5.2.3.3.1 Numerical progression. Numberic values shall increase in clockwise direction around the faces of circular dials (counter-clockwise dial movement for numerical increase). On vertical or horizontal straight scales, numberic values shall increase from bottom to top or from left to right.

5.2.3.3.2 Orientation. Numerals shall be upright when in the reading position.

5.2.3.3.3 Alignment of pointer or fixed reference line. For circular scales, the alignment of pointer or fixed reference line shall be in the 12 o'clock position for right-left directional information and in the 9 o'clock position for up-down information. For purely quantitative information, either position may be used.

5.2.3.3.4 Setting. If the display will be used for setting a value (e.g., tuning in a desired wavelength), the unused portion of the dial face shall be covered, and the open window shall be large enough to permit at least one numbered graduation to appear at each side of any setting.

5.2.3.3.5 Tracking. If the display will be used for tracking, as in the case of a directional indicator, the whole face of the dial shall be exposed.

5.2.3.3.6 Moving tape displays. When the scale length required for acceptable readout accuracy exceeds the limits of the display package capacity (i.e., compressing the scale marking would make the display illegible or subject to readout error), a moving tape scale format may be used.

5.2.3.3.7 Composite scalar/pictorial displays. Combinations of scales, pointers and pictorialized symbols may be used to combine functionally-related information into a single instrument or display (e.g., artificial horizon, command heading, true/relative bearing). Significant reference features (e.g., aircraft or ship symbols, horizon, attitude or pitch scales) shall conform to the general criteria herein for direction-of-motion, scale-pointer relationships, and legibility.

5.2.4 Cathode ray tube (CRT) displays. CRT displays shall conform to the provisions below and applicable provisions in 5.2.1.6; however, where a CRT is part of a visual display terminal used for text processing, data entry, or data inquiry applications in an office environment or equivalent, see 5.15.

5.2.4.1 Use. CRT displays may be used for text and graphics applications where display visibility from multiple viewer positions, high display brightness, high mean time between failure (MTBF), high resolution, and large display color range are more important than power consumption and physical display volume.

Downloaded from http://www.everyspec.com on 2010-01-26T2:50:27.

5.2.4.2 Luminance and contrast

5.2.4.2.1 Luminance. Ambient illuminance shall not contribute more than 25% of screen brightness through diffuse reflection and phosphor excitation. A control shall be provided to vary the CRT luminance from 10% of minimum ambient luminance to full CRT luminance. The brighter of characters or their background shall have a luminance of not less than 35 cd/m^2 (10 ft-L) and, where military applications or survivability require, shall be adjustable to zero.

5.2.4.2.2 Contrast.

5.2.4.2.2.1 General. Contrast between light characters and a dark screen background shall be not less than 6:1 (10:1 preferred); contrast between dark characters on a light screen background shall be not less than 1:6 (1:10 preferred).

5.2.4.2.2.2 Extreme ambient illumination and special applications. In bright ambient illumination, to attract attention, or to sharpen edges, contrast ratio should be not less than 7:1; in dark ambient illumination for continuous reading, contrast ratio should be not less than 5:1; to camouflage images or smooth edges, contrast ratio should be not greater than 3:1.

5.2.4.2.2.3 Control. A control shall be provided to vary the luminous symbol/dark background or dark symbol/luminous background contrast ratio.

5.2.4.2.3 Luminance range of adjacent surfaces. The luminance range of surfaces immediately adjacent to display screens shall be between 10% and 100% of screen background luminance. With the exception of emergency indicators, no light source in the immediate surrounding area shall be of a greater luminance than the CRT signal.

5.2.4.2.4 Ambient illuminance. The ambient illuminance in the CRT area shall be appropriate for other visual functions (e.g., setting controls, reading instruments) but shall not degrade the visibility of signals on the CRT display. When a CRT display is used in variable ambient illuminance, controls shall be provided to dim all light sources, including illuminated panels, indicators and switches in the immediate surround. Automatic adjustment of CRT brightness on the basis of ambient illuminance may be used if the CRT brightness is adequate for the full range of ambient illuminance.

5.2.4.2.5 Image polarity.

5.2.4.2.5.1 General. If the ambient illumination in the vicinity of the CRT is 540 lux (50 ft-C) or greater, dark characters and symbols on a light background should be used rather than light characters on a dark background.

5.2.4.2.5.2 Pictorial/graphic situation formats. Pictorial or situation data such as plan position indicator data, shall be presented as luminous symbols on a dark background.

5.2.4.3 Geometric distortion. The combined effects of all geometric distortion should not displace any point on the display from its correct position by more than 5% of the picture height.

5.2.4.4 Chromatic misregistration. Color fringes on images and symbols on CRT displays should be prevented if feasible and shall not have an adverse effect on an operator's perceptions or performance.

5.2.4.5 Preventing flicker. CRT refresh rate and other parameters (e.g., duty cycle, brightness, contrast, color and motion) shall be adjusted to provide a flicker free display.

Downloaded from http://www.everyspec.com on 2010-01-26T2:50:27.

5.2.4.6 Installation. The face of a CRT display should be flush with the surface of the panel in which it is installed.

5.2.5 Large-screen displays.

5.2.5.1 General

5.2.5.1.1 Use. Large-screen displays may be used under the following conditions:

a. A group of operators frequently refers to the same information and is required to interact as a team, based on the same information.

b. One or more members of a team of operators must move about, yet must frequently refer to information required to make decisions—information they cannot carry with them or do not have displayed at their assigned position(s).

c. Space or other constraints preclude the use of individual displays for each team member to call up commonly-used information.

d. It may be desirable to have general information available to persons who should not interrupt on-going group operations by looking over the shoulder(s) of individual operator(s) to see individual displays.

5.2.5.1.2 Avoidance. Large-screen displays shall be used only when the spatial and environmental conditions allow satisfactory observational geometry to ensure that all critical operators have visual access in terms of viewing distance, angle and lack of interference from intervening objects, personnel or ambient lighting. If the display is optically projected, see 5.2.5.3.

5.2.5.1.3 Viewing distance. The display shall not be placed further from an observer than will provide appropriate resolution of critical detail presented on the display (see legibility requirements of 5.5). The display shall not be closer to any observer than 1/2 the display width or height, whichever is greater.

5.2.5.1.4 Physical interruption of view. A large screen display shall not be located with respect to critical observers so that the view of the display is obscured regularly by persons moving in normal traffic patterns.

5.2.5.1.5 Control of displayed information. Control of large-screen group display systems shall ensure that critical information cannot be modified or deleted inadvertently or arbitrarily. Changes in the group display shall be controlled by designated operators who operate according to pre-established procedures, the command of a person in charge, or both. When an individual must make changes that are of interest only to him or her, a separate display shall be provided.

5.2.5.1.6 Content of displayed information. The content of information displayed on a large screen shall be evident to a trained observer without requiring reference to display control settings.

5.2.5.2 Direct view

5.2.5.2.1 Character height. The height of letters and numerals should be not less than 5.8 mrad (20 min) of visual angle, and shall be not less than 2.9 mrad (10 min) of visual angle from the longest anticipated viewing distance.

Downloaded from http://www.everyspec.com on 2010-01-26T2:50:27.

5.2.5.2.2 Character width. Character width should be approximately 0.9 of the height.

5.2.5.2.3. Luminance contrast. Standard and large characters (i.e., >5.8 mrad (20 min)) of visual angle, as measured from the longest anticipated viewing distance, should have a luminance contrast of not less than 1.5:1.

5.2.5.2.4 Polarity. Where feasible, dark characters should be displayed on a light background unless the background appears to flicker.

5.2.5.2.5 Background for colored objects. If the display includes color-coded objects, the background should be a neutral color such as gray.

5.2.5.2.6 Dot matrix size. If characters are formed from dot matrices, the matrix shall be not less than 10 by 14 dots.

5.2.5.3 Optical projection

5.2.5.3.1 Use. Providing ambient light can be properly controlled, optical projection displays are suitable for applications requiring group presentation, pictorial and spatial information, past history vs. real-time presentation, synthetically generated pictures, simulation of the external world, and superposition of data from more than one source. Rear projection shall be used where physical obstructions to front projection impair viewing or where work areas require high ambient illumination for other activities.

5.2.5.3.2 Seating area. Viewing distance/image width relationship and off-center viewing of optical projection displays for group viewing should conform to the preferred limits of Table IV and shall not exceed the acceptable limits indicated. For individual viewing from a fixed location, off-centerline viewing shall not exceed 10°.

5.2.5.3.3 Image luminance and light distribution. Image luminance and light distribution should conform to the preferred limits and shall not exceed the acceptable limits of Table IV. The screen center luminance at the maximum viewing angle shall be at least half its maximum luminance.

5.2.5.3.4 Legibility of projected data.

5.2.5.3.4.1 Style. A simple style of numerals and letters shall be used. Stroke width shall be 1/6 to 1/8 of numeral or letter height, but may be narrower for light markings on a dark background. Stroke width shall be the same for all letters and numerals of equal height. Letter width, numeral width, character spacing, and word spacing shall conform to 5.5.5.5, 5.5.5.6, 5.5.5.11, and 5.5.5.12, respectively.

5.2.5.3.4.2 Size. The height of letters and numerals shall be not less than 3 mrad (10 minutes) and should be not less than 4.5 mrad (15 minutes) of visual angle, as measured from the longest anticipated viewing distance.

5.2.5.3.4.3 Contrast.

5.2.5.3.4.3.1 Luminance ratio. Under optimal ambient lighting conditions, the luminance ratio should be 500:1. The luminance ratio for viewing charts, printed text and other line work via slides or opaque projectors shall be not less than 5:1. For projections that are limited in shadows and detail, such as animation and photographs with limited luminance range, the luminance ratio shall be not less

Downloaded from http://www.everyspec.com on 2010-01-26T2:50:27.

than 25:1. For images that show a full range of colors (or grays in black-and-white photographs), the luminance ratio shall be not less than 100:1.

TABLE IV. **Group viewing of optical projection displays**

FACTOR	OPTIMUM	PREFERRED LIMITS	ACCEPTABLE LIMITS
Ratio of $\frac{\text{viewing distance}}{\text{screen diagonal}}$	4	3-6	2-8
Angle off centerline	0°	20°	30°
Image luminance (no film in operating projector)	35 cd/m^2* (10 ft-L)	27-48 cd/m^2* (8-14 ft-L)	17-70 cd/m^2* (5-20 ft-L)
Luminance variation across screen (ratio of maximum to minimum luminance)	1	1.5	3.0
Luminance variation as a function of viewing location (ratio of maximum to minimum luminance)	1	2.0	4.0
Ratio of $\frac{\text{ambient light}}{\text{brightest part of image}}$	0	0.002-0.01	0.1 max**

* For still projections higher values may be used
** For presentations not involving gray scale or color (e.g., line drawings, tables) 0.2 may be used.

5.2.5.3.4.3.2 Direction of contrast. Contrast may be either light on a dark background or vice-versa, except where superposition is used. For subtractive superposition (at the source), data shall be presented as dark markings on a transparent background. For additive superposition (at the screen), data shall be presented as light markings on an opaque background. The use of colored markings against colored backgrounds of comparable brightness shall be avoided.

5.2.5.3.4.4 Alignment. Misregistration of superimposed alphanumeric data or other symbols shall be minimized.

5.2.5.3.4.5 Keystone effects. The projector-screen arrangement shall minimize keystone effects (distortion of projected data proportions due to non-perpendicularity between projector and screen).

5.2.6 Other displays.

5.2.6.1 General.

5.2.6.1.1 Types. Where applicable, direct-reading counters, printers, plotters, flags, LED, gas discharge, liquid crystal and electroluminescent displays may be used.

Downloaded from http://www.everyspec.com on 2010-01-26T2:50:27.

5.2.6.1.2 Applications. The selection of the above types of displays for various applications should be based on the following criteria as well as the criteria in Table III.

5.2.6.2 Counters.

5.2.6.2.1 Use. Counters should be used to present quantitative data encompassing large ranges when operators require quick, precise readings but do not require trend information.

5.2.6.2.2 Mounting. Counters shall be mounted as close as possible to the panel surface to minimize parallax and shadows and maximize the viewing angle.

5.2.6.2.3 Spacing between numerals. The horizontal separation between numerals shall be between one-quarter and one-half the numeral width. Commas shall not be used.

5.2.6.2.4 Movement.

a. Snap action. Numbers shall change by snap action instead of continuous movement.

b. Rate. Numbers shall follow each other not faster than 2 per second when the observer is expected to read the numbers consecutively.

c. Direction. The rotation of the counter reset knob shall be clockwise to increase the counter indication or to reset the counter.

d. Reset. Counters used to indicate the sequencing of equipment shall be designed to be reset automatically upon completion of the sequence. Provision shall also be made for manual resetting. Where push buttons are used to manually reset mechanical counters, the required actuating force required shall be not more than 16.7 N (60 oz).

5.2.6.2.5 Illumination. Counters shall be self-illuminated when used in areas in which ambient illumination will provide display luminance below 3.5 cd/m^2 (1 ft-L).

5.2.6.2.6 Finish. The surface of the counter drums and surrounding areas shall have a matte finish to minimize glare.

5.2.6.2.7 Numeral characteristics.

5.2.6.2.7.1 Contrast. Color of the numerals and background shall provide high contrast (black on white or converse, as appropriate).

5.2.6.2.7.2 Orientation. Numerals should be oriented vertically and read from left to right.

5.2.6.2.7.3 Number of digits. The number of digits should be minimized, yet be sufficient to accommodate the user's information needs.

5.2.6.2.7.4 Decimal points. A clear distinction, such as color or separate counter drums, should be made between digits on either side of an unavoidable decimal point.

5.2.6.2.7.5 Width-to-height ratio. See 5.5.5.6.

5.2.6.3 Printers.

Downloaded from http://www.everyspec.com on 2010-01-26T2:50:27.

5.2.6.3.1 Use. Printers should be used when a visual record of data is necessary or desirable. Use of printers should conform to Table III.

5.2.6.3.2 Visibility. The printed matter shall not be hidden, masked or obscured in a manner that impairs direct reading.

5.2.6.3.3 Contrast. A luminance contrast not less than 3.0 shall be provided between the printed material and the background on which it is printed.

5.2.6.3.4 Illumination. The printer shall be provided with internal illumination if the printed matter is not legible in the planned operational ambient illumination.

5.2.6.3.5 Take-up provision. A take-up device for printed material shall be provided.

5.2.6.3.6 Annotation. Where applicable, printers should be mounted so that the printed matter (e.g., paper, metalized paper) may be easily annotated while still in the printer.

5.2.6.3.7 Legibility. The print output shall be free from character line misregistration, character tilt or smear.

5.2.6.3.8 Printed tapes. The information on the tapes shall be printed so that it can be read as it is received from the machine without requiring the cutting and pasting of tape sections.

5.2.6.3.9 Control, replenishment and service. Printers shall conform to 5.2.6.4.8.

5.2.6.3.10 Print command acknowledgment. A user command to print should be acknowledged within 2 seconds if a print delay beyond that time will occur.

5.2.6.4 Plotters and recorders.

5.2.6.4.1 Use. Plotters and recorders may be used when a visual record of continuous graphic data is necessary or desirable.

5.2.6.4.2 Visibility. Critical graphics (points, curves and grids that must be observed when the recording is being made) shall not be obscured by pen assembly, arm or other hardware elements.

5.2.6.4.3 Contrast. A luminance contrast (see MIL-HDBK-1908) not less than 1.0 shall be provided between the plotted function and the background on which it is drawn.

5.2.6.4.4 Take-up device. A take-up device for extruded plotting materials shall be provided when necessary or desirable.

5.2.6.4.5 Job aids. Graphic overlays should be provided where these may be critical to proper interpretation of graphic data as it is being generated. Such aids shall not obscure or distort the data.

5.2.6.4.6 Smudging/smearing. The plot should resist smudging or smearing under operational use.

5.2.6.4.7 Annotation. Where applicable, plotters and recorders should be designed or mounted so that the operator can write on or mark the paper while it is still in the plotter or recorder.

5.2.6.4.8 Control, replenishment and service. Plotters and recorders shall conform to criteria herein with regard to:

Downloaded from http://www.everyspec.com on 2010-01-26T2:50:27.

a. controls and displays used to start, stop or adjust the machine and critical operating elements;

b. positive indication of the remaining supply of plotting materials (e.g., paper, ink, ribbon);

c. insertion, adjustment, and removal of paper, replenishment of ink supply, replacement of pen, or other operator tasks, without requiring disassembly, special equipment or tools; and

d. minor servicing on site by a technician, e.g., adjustment of drive system, cleaning, or replacement of operating items that ordinarily would not be available to an operator.

5.2.6.5 Flags.

5.2.6.5.1 Use. Flag indicators should be used to display qualitative, non-emergency conditions and shall indicate a single, immediately identifiable event (e.g., completed opening of a valve). Use of flags should conform to Table III.

5.2.6.5.2 Mounting. Flags shall be mounted as close to the surface of the panel as possible without restricting their movement or obscuring necessary information. As applicable, flags shall be located above the associated control switch, within meter windows, or with associated items.

5.2.6.5.3 Snap action. Flags shall operate by snap action.

5.2.6.5.4 Positions. Only two (preferred) or three positions shall be used.

5.2.6.5.5 Contrast. A luminance contrast not less than 3.0 shall be provided between flags and their backgrounds under all expected lighting conditions.

5.2.6.5.6 Legend. Whenever possible, alphanumeric legends shall be used in lieu of, or in addition to, color coding. When a legend is provided on the flag, the lettering shall appear upright when the flag assumes the active or no-go position.

5.2.6.5.7 Malfunction indication. When flags are used to indicate the malfunction of a visual display, the malfunction position of the flag shall obscure part of the malfunctioning display and shall be readily apparent to the operator under all expected levels of illumination.

5.2.6.5.8 Test provision. A convenient means shall be provided to test the operation of flags.

5.2.6.6 Light-emitting diodes (LEDs).

5.2.6.6.1 General. Unless specified below, LEDs shall conform to 5.2.2.

5.2.6.6.2 Use. LEDs may be used for transilluminated displays, including legend and simple indicator lights, and for matrix (alphanumeric) displays, only if the display is bright enough to be readable in the environment of intended use (enclosure, bright sunlight, low temperature). They may be used for graphics applications where display visibility from multiple viewer positions, high MTBF, low display volume, and low power consumption are more important than high resolution, high brightness, high power consumption, or sunlight readability.

5.2.6.6.3 Intensity control. The dimming of LEDs should be compatible with the dimming of incandescent lamps.

Downloaded from http://www.everyspec.com on 2010-01-26T2:50:27.

5.2.6.6.4 Color coding. With the exception of red alpha numeric displays, LED color coding shall conform to 5.2.2.1.13; however, red LEDs should not be located near red lights used as outlined in 5.2.2.1.13.

5.2.6.6.5 Lamp testing. LED indicator lights with 100,000 hours or longer mean time between failure (MTBF) shall not require the lamp test capability specified in 5.2.2.1.12.2.

5.2.6.7 Dot matrix/segmented displays.

5.2.6.7.1 General. The following provisions apply to those displays (LED, CRT, gas discharge, liquid crystal, and incandescent) only when used to present alphanumeric and symbolic information via dot matrix or segmentation.

5.2.6.7.2 Use. Dot matrix, 14 segment, and 16 segment displays may be used for applications involving interactive computer systems, instruments, avionics, navigation, and communication equipment, where the presentation of alphanumeric, vector-graphic, symbolic or real-time information is required. Seven segment displays shall be used only for applications requiring numeric information.

5.2.6.7.3 Symbol definition. Dot matrix characters that are not formed by pixels shall contain not less than 5 by 7 dots, with 7 by 9 preferred. If system requirements call for symbol rotation, dot matrix characters shall contain not less than 8 by 11 dots, with 15 by 21 preferred.

5.2.6.7.4 Alphanumeric character and symbol sizes. Alphanumeric characters and symbols shall subtend not less than 4.7 mrad (16 min) of visual angle as measured from the longest anticipated viewing distance.

5.2.6.7.5 Use of upper case. Alphanumeric characters shall be upper case.

5.2.6.7.6 Viewing angle. The optimum viewing angle is perpendicular to the display. Viewing angle of dot matrix or segmented displays should be not more than 35° off axis.

5.2.6.7.7 Emitter color. Monochrome displays shall use the following colors having the following dominant wavelengths in order of perference: green (555 nm), yellow (575 nm), orange (585 nm), and red (660 nm). Blue emitters should be avoided. The selected color should be visible through laser protective (or other) eye wear required to be worn by the user.

5.2.6.7.8 Intensity control. Where applicable, dimming controls shall be provided to maintain appropriate legibility and operator dark adaptation level.

5.2.6.7.9 Display testing. See 5.2.6.6.5.

5.2.6.7.10 Location of red alphanumeric LEDs/segmented displays. Red LEDs/segmented displays shall not be grouped with or located adjacent to red warning lights.

5.2.6.8 Electroluminescent displays.

5.2.6.8.1 Use. Electroluminescent (EL) displays may be used where display visibility from multiple viewer positions, high display uniformity, high MTBF, high resolution, low display volume, low heat dissipation, and low power consumption are more important than display of multicolored objects, high brightness images, or sunlight readability. Since they are also lightweight, and provide display flexibility, they may be used instead of mechanical instruments.

Downloaded from http://www.everyspec.com on 2010-01-26T2:50:27.

5.2.6.8.2 Alphanumeric character and symbol sizes. The height of alphanumeric characters and geometric and pictorial symbols shall subtend not less than 4.5 mrad (15 minutes) of visual angle. Alphanumeric characters shall be upper case. Aircraft display characters and symbols that must be read in flight shall subtend not less than 7 mrad (24 min) of visual angle.

5.2.6.9 Liquid crystal displays (LCDs)

5.2.6.9.1 Low ambient illumination. Backlighting (if appropriate) and viewing angle should be adjustable by users.

5.2.6.9.2 Display polarity. The image should be light characters on a dark background for reflective LCDs and dark characters on a light background for transmissive (backlighted) LCDs.

5.2.6.9.3 Color usage. See 5.2.1.5.6.

5.2.6.10 Representational displays

5.2.6.10.1 Use. Representational displays integrate qualitative and quantitative information about relationships between objects in symbolic or pictographic form in order to enhance the operator's ability to conceptualize relationships. Representational displays may be used to present information about (a) the relative position and separation of objects, as in a map, (b) information not available in the real world, as in a nautical radar display that shows the predicted path and position of a vessel after a given time, or "real" world as in a virtual environment.

5.2.6.10.2 Display motion. Graphic display items should not move faster than 60 degrees (20 degrees preferred) of visual angle per second.

5.2.6.10.3 Orientation of objects

a. Orientation of real objects relative to the operator should always be clear and appropriate to the task. Displays should include reference to the vertical or horizontal direction, e.g., "North" or "straight ahead."

b. Orientation of objects relative to each other should provide cues concerning the objects depicted (e.g., front and back, top and bottom) and object dynamics (e.g., direction and speed of motion and rotation).

5.2.6.10.4 Scale. The overall scale used should be operator adjustable as appropriate to the task. Representational displays should indicate the scale of object depicted.

5.2.6.11 Stereoscopic displays.

5.2.6.11.1 Use. Three-dimensional displays may be used only if they enhance human performance, the user population will have normal stereoscopic vision, and the field-of-view is suitable for the number of viewers intended.

5.2.6.11.2 Color. Where stereoscopic images are color coded, secondary colors should be used. Saturated primary colors should be avoided.

5.2.6.11.3 Spatial separation of depth-coded objects. Depth-coded objects shall be separated spatially to eliminate disparity averaging, crowding, and repulsion.

5.2.6.11.4 Size scaling. Image size should be scaled according to the disparity of the image. If accurate size perception is critical to task performance, size scaling should be done for each user.

Downloaded from http://www.everyspec.com on 2010-01-26T2:50:27.

5.2.6.11.5 Luminance and depth. Luminance should be co-modulated with stereopsis, consistent with the type of image depicted.

5.2.6.11.6 Interocular crosstalk. When stereoscopic effects are created by the presentation of separate images to each eye, the image intended for the left eye shall not be seen by the right eye, and vice versa.

5.2.6.11.7 Dynamic displays. If dynamic displays are used, the temporal modulation of stereopsis should be approximately 1 Hz.

5.2.6.12 Head up displays (HUDs).

5.2.6.12.1 General. Head-up displays shall be compatible with the capabilities and limitations of the human visual system. Information presented on head-up displays shall be limited to critical data which the operator is required to monitor while simultaneously performing some primary visual task.

5.2.6.12.2 Windshield transmission rate. If a vehicle windshield is used as a HUD combiner, the total transmission through the windshield shall be not less than 70% as measured along the line of sight.

5.2.6.12.3 Eye box size. Regardless of the optical display technology, the head motion , or eye box size should be not less than 11.5 cm (4.5 in.) wide 6.5 cm (2.5 in.) high, and 15 cm (6 in.) deep.

5.2.6.12.4 Object angular displacement. The angular displacement of objects viewed through the combining glass assembly should be not greater than 0.5 mrad (1.7 min) of visual angle.

5.2.6.12.5 Apparent image focus distance. The apparent image focus distance of HUDs for a land-based vehicle application should be equal to the approximate distance of the driver from the front of the vehicle.

5.2.6.12.6 Field of view. HUDs used on land-based vehicle applications should have a field of view not less than 6° above and 5° below the horizontal and 12° to the left and right.

5.2.6.12.7 Exit pupil. Head-up displays shall have a minimum exit pupil (that area within a collimated beam in which the entire image formed by an objective lens is capable of being seen) of 72 mm (2.8 in.).

5.2.6.12.8 Characters and symbols

5.2.6.12.8.1 Legibility. Sufficient contrast shall be provided to ensure symbol legibility under all expected viewing conditions.

5.2.6.12.8.2 Character heights. The height for HUD alphanumeric characters should be not less than 8.1 mrad (28 min) of visual angle. The height for HUD non-alphanumeric characters should be not less than 9.9 mrad (34 min) of visual angle.

5.2.6.12.8.3 Raster lines/symbol height. For head-up raster displays, alphanumeric characters should not used less than 16 raster lines/symbol height. Non-alphanumeric characters should use not less than 20 raster lines/symbol height.

5.2.6.12.8.4 Symbol brightness. Symbols shall be bright enough to be legible under all expected ambient lighting conditions. When legibility in direct sunlight or background luminance of 34,000

Downloaded from http://www.everyspec.com on 2010-01-26T2:50:27.

cd/m^2 (10,000 footlamberts) or greater is required, symbol brightness shall be not less than 5000 cd/m^2 (15,000 footlamberts) . For most high ambient light applications, symbol brightness should be 6,900 - 10,300 cd/m^2 (2,000 - 3,000 footlamberts). Symbol luminance shall be adjustable.

5.2.6.12.8.5 Symbol line width. The line width of symbols used in head-up displays shall be not less than 0.5 mrad (1.7 min). For most applications, symbol line width should be 1.0 ± 0.2 mrad (3.4 ± 0.7 min).

5.2.6.13 Helmet mounted displays (HMDs)

5.2.6.13.1 Visual orientation. All required mission symbology should be in the operator's instantaneous field of view, regardless of head position.

5.2.6.13.2 Symbol location. All displayed symbols should be presented within the central 25 degree area of the HMD to minimize required eye movements.

5.2.6.13.3 Gray shades. Monochromatic HMDs should provide not less than six shades of gray for alphanumeric and simple graphic information and not less than nine shades of gray for complex graphic or sensor data.

5.2.6.13.4 Field of view. The field of view should provide acceptable visual search performance, object recognition, and spatial orientation. (Acceptable field of view size is dependent on specific mission requirements.) HMDs shall not obscure mission essential vision. Operators shall have an unrestricted view of all displays and controls.

5.2.6.13.5 See-through displays. Display imagery on see-through displays should be visually distinctive from any anticipated background variation.

5.2.6.13.6 Mode selection. As applicable, a user selectable optional display mode should be provided to reduce display clutter.

5.2.6.13.7 Attention distraction. HMDs should minimize attentional distraction and user cognitive load demand by providing only task-oriented, essential, integrated information with minimum memory requirements.

5.2.6.13.8 Salient cues. HMDs should provide only salient cueing (e.g., directing attention to critical information).

5.2.6.13.9 Standardized graphics. All information presented graphically (e.g., positional, topographic, and spatial information) should use standardized symbols.

5.2.6.13.10 Helmet characteristics

5.2.6.13.10.1 Head motion attenuation. All HMD designs should attenuate head motion in the 4 Hz range.

5.2.6.13.10.2 Weight distribution. Weight distribution of helmet mounted items should be balanced to avoid or minimize neck strain, fatigue, and helmet movement relative to the operator's head.

5.2.6.13.10.3 External attachments. Any required external attachments should not restrict operator head or shoulder motion.

Downloaded from http://www.everyspec.com on 2010-01-26T2:50:27.

5.3 Audio displays.

5.3.1 General.

5.3.1.1 Use. Audio displays should be provided under the following conditions:

a. The information to be processed is short, simple, and transitory, requiring an immediate or time-based response.

b. The common mode of visual display is restricted by over-burdening; ambient light variability or limitation; operator mobility; degradation of vision by vibration, high g-forces, hypoxia, or other environmental considerations; or anticipated operator inattention.

c. The criticality of the event makes supplementary or redundant notification desirable.

d. It is desirable to warn, alert, or cue the operator to subsequent additional response.

e. Custom or usage has created anticipation of an audio display.

f. Voice communication is necessary or desirable.

5.3.1.2 Signal type. When an audio presentation is required, the optimum type of signal should be presented in accordance with Table V. Audio signals should not interfere with other sound sources, including verbal communication. Auditory presentation is preferred over visual presentation: (1) for signals of acoustic origin; (2) for warning signals to call attention to imminent or potential danger; (3) for situations when many displays are visually presented, e.g., piloting an airplane; (4) for presenting information independently of head orientation; (5) for situations when darkness limits vision or makes seeing impossible; (6) for conditions of anoxia or high positive g forces; and (7) when signals must be distinguished from noise, especially periodic signals in noise.

5.3.1.3 Signal meaning. Each audio signal shall have only one meaning. The ear acts as an effective detector of periodic signals in noise. Even when it is considerably weaker than the background noise, if the signal is a sinusoid (pure tone) or a combination of sinusoids (complex tone), the ear can detect it. The ear also efficiently detects periodic modulation in the very low frequency range and responds to variations in intensity or frequency.

5.3.1.4 Apparent urgency. The attention gaining characteristics of the signals in a set (e.g., rapidity of pulse pattern, frequency, intensity) should match the relative priority of the signal.

5.3.1.5 Use with several visual displays. If immediate discrimination is not critical to personnel safety or system performance, one audio signal may be used in conjunction with several visual displays.

5.3.1.6 Speech supplements. When speech supplements are used, the length of the initial alerting and the actual message shall not interfere with other auditory inputs including interpersonal voice communication unless the message is critical.

5.3.1.7 Silent operations at night. In equipment designed for silent operation at night, the sound level at the ear under an earphone should be not greater than 60 dBA.

5.3.1.8 Manual overrides. Non-critical audio signals should be capable of being turned off at the discretion of the user. Where this capability is provided, a visual indication that the signal has been turned off shall be provided to the user. For overrides of warning signals, see 5.3.6.

Downloaded from http://www.everyspec.com on 2010-01-26T2:50:27.

TABLE V. **Functional evaluation of audio signals**

FUNCTION	TYPE OF SIGNAL		
	TONES (Periodic)	COMPLEX SOUNDS (Non-Periodic)	SPEECH
QUANTITATIVE INDICATION	POOR Maximum of 5 to 6 tones absolutely recognizable	POOR Interpolation between signals inaccurate.	GOOD Minimum time and error in obtaining exact value in terms compatible with response.
QUALITATIVE INDICATION	POOR-TO-FAIR Difficult to judge approx-imate value and direction of deviation from null setting unless presented in close temporal sequence.	POOR Difficult to judge approximate deviation from desired value.	GOOD Information concerning displacement, direction, and rate presented in form compatible with required response.
STATUS INDICATION	GOOD Start and stop timing. Continuous information where rate of change of input is low.	GOOD Especially suitable for irregularly occurring signals (e.g., alarm signals).	POOR Inefficient; more easily masked; problem of repeatability.
TRACKING	FAIR Null position easily monitored; problem of signal-response compatibility	POOR Required qualitative indications difficult to provide.	GOOD Meaning intrinsic in signal.
GENERAL	Good for automatic communication of limited information. Meaning must be learned. Easily generated.	Some sounds available with common meaning (e.g., fire bell). Easily generated.	Most effective for rapid (but not automatic) communication of complex, multi-dimensional information. Meaning intrinsic in signal and context when standardized. Minimum of new learning required.

5.3.1.9 Reliability

5.3.1.9.1 False alarms. The design of audio display devices and circuits shall preclude false alarms.

5.3.1.9.2 Failure. The audio display device and circuit shall be designed to preclude warning signal failure in the event of system or equipment failure and vice versa.

5.3.1.9.3 Circuit test. All audio displays shall be equipped with circuit test devices or other means of operability test.

Downloaded from http://www.everyspec.com on 2010-01-26T2:50:27.

5.3.1.10 Aircrew stations. In accordance with JSSG 2010.

5.3.2 Audio warnings.

5.3.2.1 Warning signals. Signals should be provided to warn personnel of impending danger, to alert an operator to a critical change in system or equipment status, and to remind an operator of a critical action or actions that must be taken. An alerting/warning signal shall provide the operator with a greater probability of detecting the triggering condition than normal observation would provide in the absence of the signal. NOTE: Certain audio signals have been standardized for aircraft use by joint service and international agreement. Audio signals for future aircraft design should conform to these agreements.

5.3.2.2 Nature of signals. Audio warning signals should normally consist of two sequential elements: an alerting signal and an identifying or action signal.

5.3.2.2.1 Two element signals. When reaction time is critical and a two element signal is necessary, an alerting signal of 0.5 second duration shall be provided. All essential information shall be transmitted in the first 2.0 seconds of the identifying or action signal.

5.3.2.2.2 Single element signal. When reaction time is critical, signals shall be short. If a single element signal is permissible, all essential information shall be transmitted in the first 0.5 second.

5.3.2.3 Caution signals. Caution signals shall be readily distinguishable from warning signals and shall be used to indicate conditions requiring awareness, but not necessarily immediate action.

5.3.2.4 Relation to visual displays. When used in conjunction with visual displays, audio warning devices shall be supplementary or supportive. The audio signal shall be used to alert and direct operator attention to the appropriate visual display.

5.3.3 Characteristics of audio warning signals.

5.3.3.1 Frequency.

5.3.3.1.1 Range. The frequency range shall be between 200 and 5,000 Hz and, if possible, between 500 and 3,000 Hz. When signals must travel over 300 m (985 ft), sounds with frequencies below 1,000 Hz should be used. Frequencies below 500 Hz should be used when signals must bend around obstacles or pass through partitions. The selected frequency band shall differ from the most intense background frequencies and shall be in accordance with other criteria in this section.

5.3.3.1.2 Electric power frequency avoidance. The frequency of a warning tone shall be different from that of the electric power employed in the system.

5.3.3.2 Intensity.

5.3.3.2.1 Compatibility with acoustical environment. The intensity, duration and source location of audio alarms and signals shall be compatible with the acoustical environment of the intended receiver as well as the requirements of other personnel in the signal areas.

5.3.3.2.2 Compatibility with clothing and equipment. Audio signals shall be loud enough to be heard and understood through equipment or garments (e.g., parka hood, NBC protective hood, hearing protective devices) covering the ears of the listener.

Downloaded from http://www.everyspec.com on 2010-01-26T2:50:27.

5.3.3.2.3 Discomfort. Audio warning signals should not be of such intensity as to cause discomfort or "ringing" in the ears. Levels should not exceed 115 dB at the ear of the listener.

5.3.4 Signal characteristics in relation to operational conditions and objectives.

5.3.4.1 Audibility. A signal-to-noise ratio of at least 10 dB shall be provided in at least one octave band between 200 and 5,000 Hz at the operating position of the intended receiver is usually sufficient. Signal to noise ratios can be greater as long as the levels do not exceed 115 dB at the ear of the listener.

5.3.4.2 Alerting capability.

5.3.4.2.1 Attention and avoidance of startle reaction. Signals with high alerting capacity should be provided when the system or equipment requires the operator to concentrate attention. Such signals shall not, however, be so startling as to preclude appropriate responses or interfere with other functions by holding attention away from other critical signals. To minimize startle reactions, the increase in sound level during any 0.5 sec period should be not greater than 30 dB. In addition, the first 0.2 sec of a signal should not be presented at maximum intensity, use square topped waveforms, or present abruptly rising waveforms.

5.3.4.2.2 Onset and sound pressure level. The onset of critical alerting signals should be sudden, and a relatively high sound pressure level should be provided as specified 5.3.4.1.

5.3.4.2.3 Dichotic presentation. When earphones will be worn in the operational situation, a dichotic presentation should be used whenever feasible, alternating the signal from one ear to the other by means of a dual-channel headset.

5.3.4.2.4 Headset. When the operator is wearing earphones covering both ears during normal equipment operation, the audio warning signal shall be directed to the operator's headset as well as to the work area. Binaural headsets should not be used in any operational environment below 85 dBA where sounds that provide the operator with useful information cannot be directed to the operator's headset. Such sounds may include voices, machine noise that indicates wear or malfunction and other audible indications of system performance/mission status.

5.3.4.3 Discriminability.

5.3.4.3.1 Use of different characteristics. When several different audio signals are to be used to alert an operator to different types of conditions, discriminable differences in intensity, pitch, beats and harmonics, or temporal patterns shall be provided. If absolute discrimination is required, the number of signals to be identified shall not exceed four. Signal intensity shall not be used alone as a means of discriminating between signals. Warnings should differ on two or more parameters.

5.3.4.3.2 Coding. Where discrimination of warning signals from each other will be critical to personnel safety or system performance, audio signals shall be appropriately coded. Alarms that are perceptibly different shall correlate with different conditions requiring critically different operator responses (e.g., maintenance, emergency conditions, and health hazards). Such signals shall be sufficiently different to minimize the operator's search of visual displays. Harmonically related frequencies should not be used to code different signals; they may, however, be used within a single signal.

5.3.4.3.3 Critical signals. The first 0.5 second of an audio signal requiring fast reaction shall be discriminable from the first 0.5 second of any other signal that may occur. Familiar signals with established names or associations shall be selected. Speech should be used whenever feasible.

Downloaded from http://www.everyspec.com on 2010-01-26T2:50:27.

5.3.4.3.4 Action segment. The identifying or action segment of an audio warning signal shall specify the precise emergency or condition requiring action.

5.3.4.3.5 Differentiation from routine signals. Audio alarms intended to bring the operator's attention to a malfunction or failure shall be differentiated from routine signals, such as bells, buzzers, and normal operation noises.

5.3.4.3.6 Prohibited types of signals. The following types of signals shall not be used as warnings where possible confusion might exist because of the operational environment:

a. Modulated or interrupted tones that resemble navigation signals or coded radio transmissions.

b. Steady signals that resemble hisses, static, or sporadic radio signals.

c. Trains of impulses that resemble electrical interference, whether regularly or irregularly spaced in time.

d. Simple warbles that may be confused with the type made by two carriers when one is being shifted in frequency (beat-frequency-oscillator effect).

e. Scrambled speech effects that may be confused with cross modulation signals from adjacent channels.

f. Signals that resemble random noise, periodic pulses, steady or frequency modulated simple tones, or any other signals generated by standard countermeasure devices (e.g., "bagpipes").

g. Signals similar to random noise generated by air conditioning or any other equipment.

5.3.4.4 Compatibility.

5.3.4.4.1 Existing signals. The meaning of audio warning signals selected for a system should be consistent with warning signal meanings already established for that function.

5.3.4.4.2 Acoustic environment. Established signals shall be used, provided they are compatible with the acoustic environment and the requirements specified herein for the voice communication system. Standard signals shall not be used to convey new meanings.

5.3.4.5 Masking.

5.3.4.5.1 Other critical channels. Audio warning signals shall not interfere with any other critical functions or warning signals, or mask any other critical audio signals.

5.3.4.5.2 Separate channels. Where a warning signal delivered to a headset might mask another essential audio signal, separate channels may be provided to direct the warning signal to one ear and the other essential audio signal to the other ear. When required by operating conditions, this dichotic presentation may also alternate the two signals from ear to ear.

5.3.5 Verbal warning signals.

5.3.5.1 Nature of signals. Verbal warning signals shall consist of:

a. an initial alerting (non speech) signal to attract attention and to designate the general problem, and

Downloaded from http://www.everyspec.com on 2010-01-26T2:50:27.

b. a brief standardized verbal message to identify the specific condition and to suggest appropriate action.

5.3.5.2 Intensity. Verbal alarms for critical functions shall be not less than 20 dB above the speech interference level at the operating position of the intended receiver.

5.3.5.3 Vocal criteria.

5.3.5.3.1 Type of voice. The voice shall be distinctive and mature.

5.3.5.3.2 Delivery style. The messages shall be presented in a formal, impersonal manner.

5.3.5.4 Speech processing. Verbal warning signals shall be processed only when necessary to increase or preserve intelligibility, such as by increasing the strength of consonant sounds relative to vowel strength. Where a signal must be relatively intense because of high ambient noise, peak-clipping may be used to protect the listener against auditory overload.

5.3.5.5 Message content. Word selection priority shall be intelligibility, descripitiveness, and conciseness, in that order. To provide sufficient context for comprehension, not less than four syllables should be used unless the resulting message would be inconsistent with standard practice.

5.3.5.6 Critical warnings and priorities.

5.3.5.6.1 Critical warning signals. Critical warning signals shall be repeated with not more than a 3-second pause between messages until the condition is corrected or overridden by the crew.

5.3.5.6.2 Message priorities. A priority system shall be established to ensure that higher criticality messages override the presentation of lesser priority messages. If two or more incidents or malfunctions occur simultaneously, the message having the higher priority shall be given first. The remaining messages shall follow in order of priority. In the event of a complete subsystem failure, the system shall integrate previous messages via electronic gating and report the subsystem rather than the component failure.

5.3.6 Controls for audio warning devices.

5.3.6.1 Automatic or manual shut-off. When an audio signal is designed to persist as long as it contributes useful information, a shut-off switch, controllable by the operator, the sensing mechanism, or both, shall be provided, depending on the operational situation and safety factors.
When a manual shut-off is used, a visual indication that the warning has been turned off shall be provided.

5.3.6.2 Automatic reset. Whether an audio warning signal is designed to be terminated automatically, manually, or both, an automatic reset function shall be provided. The automatic reset function shall be controlled by the sensing mechanism which shall recycle the signal system to a specified condition as a function of time or the state of the signaling system so that the warning device can sound again if the condition repeats.

5.3.6.3 Redundant Visual Warning. All non-verbal aural annunciations shall be accompanied by a visual annunciation which defines the condition. In a cockpit, this may be an illuminated display. In the case of a warning horn on a backing vehicle, the vehicle's backward motion provides adequate redundancy.

5.3.6.4 Volume control.

Downloaded from http://www.everyspec.com on 2010-01-26T2:50:27.

5.3.6.4.1 Automatic or manual. The volume (loudness) of an audio warning signal shall be designed to be controlled by the operator, the sensing mechanism, or both, depending on the operational situation and personnel safety factors. Control movements shall be restricted to prevent reducing the volume to an inaudible level, or increasing it to an unacceptably high level. When detection of an audio signal is essential (e.g., hand-held mine detectors), the signal level shall be adjustable by the operator.

5.3.6.4.2 Ganging to mode switches. Volume controls may be ganged to mode switches to provide maximum output during mission phases when intense noise may occur and to provide reduced volume at other times. Ganging shall not be used if intense noise may occur during an emergency in a mission phase when the volume would be decreased below an audible level.

5.3.6.4.3 Caution signal controls. Audio caution signals shall be provided with manual reset and volume controls.

5.3.6.5 Duration. The duration of an audio warning signal shall be at least 0.5 second, and may continue until the appropriate response is made. The completion of a corrective action by the operator or by other means shall automatically terminate the signal.

5.3.6.6 Duration limitations. Signals that persist or increase progressively in level shall not be used for emergency situations if manual shut-off may interfere with the corrective action required.

5.3.7 Speech transmission equipment.

5.3.7.1 Frequency. Microphones and associated system-input devices shall respond optimally to that part of the speech spectrum most essential to intelligibility (i.e., 200 to 6,100 Hz). Where system engineering necessitates speech-transmission bandwidths narrower than 200 to 6,100 Hz, the minimum acceptable frequency range shall be 250 to 4,000 Hz.

5.3.7.2 Dynamic range. The dynamic range of a microphone used with a selected amplifier shall be wide enough to admit variations in signal input of at least 50 dB.

5.3.7.3 High-pass filtering. In an environment with predominantly low-frequency noise, 300 Hz cut-off, high-pass filtering should be used. In very loud, low frequency noise environments (100 dB overall), noise canceling microphones shall be used and shall be capable of achieving an improvement of not less than 10 dB peak-speech to root-mean-square-noise ratio as compared with non-noise-canceling microphones of equivalent transmission characteristics.

5.3.7.4 Pre-emphasis. If necessary, speech system input devices should employ frequency pre-emphasis with a positive slope frequency characteristic no greater than 18 dB per octave from 140 to 1,500 to and no greater than 9 dB per octave over the frequency range 1,500 to 4,800 Hz, when no clipping is used.

5.3.7.5 Peak-clipping of speech signals. Where speech signals are to be transmitted over channels showing less than 15 dB peak-speech to root-mean-square-noise ratios, peak clipping of 12 to 20 dB may be employed at system input and may be preceded by frequency pre-emphasis as specified in 5.3.7.4.

5.3.7.6 Noise shields. When the talker is in an intense noise field, the microphone should be put in a noise shield. Noise shields should be meet the following requirements:

a. A volume of at least 250 cu cm (15.25 cu in) shall be provided to permit a pressure gradient microphone to function normally.

Downloaded from http://www.everyspec.com on 2010-01-26T2:50:27.

b. A good seal shall be provided against the face with the pressure of the hand or the tension of straps.

c. A hole or combination of holes covering a total area of 65 sq mm (0.1 sq in) shall be provided in the shield to prevent pressure buildup.

d. Standing wave patterns shall be prevented by shape, or by use of sound absorbing material.

e. The shield shall present no impediment to voice effort, mouth, jaw movement or breathing.

5.3.7.7 Automatic loudness control. Automatic loudness control may be used in situations with a consistent speech-to-noise differential not greater than 20 dB.

5.3.7.8 Binaural asychronous delay. Except for 3D sound localization applications, critical voice communications systems shall not introduce a discernible binaural asynchronous delay (>1 msec).

5.3.7.9 Speaker/side tone. The speaker's verbal input shall be in phase with its reproduction as heard on the headset. This side tone should not be filtered or modified before it is received in the headset.

5.3.8 Speech reception equipment.

5.3.8.1 Frequency range. Headphones and loudspeakers shall be subject to the same frequency response restrictions as microphones and transmission equipment except that loudspeakers for use in multi-speaker installations and multiple channels fed into headphones (e.g., where several speech channels are to be monitored simultaneously) shall respond uniformly (±5 dB) from 100 to 4,800 Hz.

5.3.8.2 Loudspeakers for multi-channel monitoring.

5.3.8.2.1 Monitoring of speakers. If several channels are to be monitored simultaneously by means of loudspeakers, the speakers shall be mounted at least 10° apart in the horizontal plane frontal quadrant, from 45° left to 45° right of the operator's normal forward facing position.

5.3.8.2.2 Filtering. When additional channel differentiation is required, apparent lateral separation shall be enhanced by applying low-pass filtering (frequency cutoff = 1,800 Hz) to signals fed to loudspeakers on one side of the central operator position. If three channels are involved, one channel shall be left unfiltered, a high pass filter with 1,000 Hz cutoff shall be provided in the second channel, and a low-pass filter with 2,500 Hz cutoff shall be provided in the third channel. A visual signal shall be provided to show which channel is in use.

5.3.8.3 Use of de-emphasis. When transmission equipment employs pre-emphasis, and peak clipping is not used, reception equipment shall employ frequency de-emphasis of characteristics complementary to those of pre-emphasis only if it improves intelligibility, i.e., de-emphasis shall be a negative-slope frequency response not greater than 9 dB per octave over the frequency range 140 to 4,800 Hz.

5.3.8.4 Headsets. If listeners will work in high ambient noise (85 dBA or above), binaural rather than monaural headsets shall be provided. Unless operational requirements dictate otherwise, binaural headsets shall be wired so that the sound reaches the two ears in opposing phases. Their attenuation qualities should be capable of reducing the ambient noise level to less than 85 dBA. Provisions should be incorporated to furnish the same protection to those who wear glasses.

Downloaded from http://www.everyspec.com on 2010-01-26T2:50:27.

5.3.8.5 Earphone/speaker-to-microphone feedback isolation. Sufficient electrical, mechanical, and acoustical isolation shall be provided to preclude feedback oscillations (squeal problems) or echo effects (no discernible unwanted voice echo to speaker).

5.3.8.6 Public address systems. The location, number, and loudness of speakers should provide intelligible signals/messages to all personnel. Speaker range in reverberant spaces should be not greater than 15 m (50 ft) to avoid excessive echoing (also see 5.8.3.4.3). Speaker amplitude should not mask audio warnings.

5.3.9 Operator comfort and convenience.

5.3.9.1 Comfort. Communication equipment to be worn by an operator (e.g., headphones and telephone headsets) shall be designed to preclude operator discomfort. Metal parts of the headset shall not come in contact with the user's skin.

5.3.9.2 Hands-free operation. Operator microphones, headphones, and telephone headsets shall be designed to permit hands-free operation under normal working conditions.

5.3.9.3 Accessibility of handsets. Where communication requirements necessitate the use of several telephone handsets, the accessibility of their standby locations shall be determined by operational priority, i.e., the most frequently or urgently needed handset shall be the most accessible. The handsets may also be color coded if they will be visible to operating personnel under the working conditions.

5.3.10 Operating controls for voice communication equipment.

5.3.10.1 Volume controls. Accessible volume or gain controls shall be provided for each communication receiving channel (e.g., loudspeakers or headphones) with sufficient electrical power to drive sound pressure level to at least 100 dB overall when using two earphones, and shall have pressure operated gain control switches to compensate for altitude in unpressurized compartments. The minimum setting of the volume control shall be limited to an audible level, i.e., it shall not be possible to inadvertently disable the system with the volume control. Power (on-off) and volume adjustment should not be combined into the same control; however, if conditions justify their combination, a noticeable detent position shall be provided between the OFF position and the lower end of the continuous range of volume adjustment. When combined power and volume controls are used, the OFF position shall be labeled.

5.3.10.2 Squelch control. Where communication channels are to be continuously monitored, each channel shall be provided with a signal-activated switching device (squelch control) to suppress channel noise during no-signal periods. A manually operated on-off switch, to deactivate the squelch when receiving weak signals, shall be provided.

5.3.10.3 Foot-operated controls. When normal working conditions will permit the operator to remain seated at the working position and require access to "talk-listen" or "send-receive" control switches, or if console operation requires the use of both hands, foot-operated controls shall be provided. Hand-operated controls for the same functions shall be provided for emergency use and for use when the operator may need to move from one position to another.

5.3.11 Telephone systems.

5.3.11.1 Conventional telephone systems.

Downloaded from http://www.everyspec.com on 2010-01-26T2:50:27.

5.3.11.1.1 Telephone handsets. Handsets used with conventional telephones having a band pass of 200 - 3300 Hz shall be compatible with users' hand sizes and mouth-to-ear distances, and should provide firm ear contact.

5.3.11.1.2 Cords. Cords shall be non-kinking or self-retracting, of sufficient length to permit reasonable operator mobility, and positioned to avoid entangling critical controls or becoming entangled with passing people or objects.

5.3.11.1.3 Handset cradles. Vertically mounted handset cradles shall be configured and located to prevent the handset from being knocked out of the cradle by passing people or objects.

5.3.11.1.4 Multiple telephones. If several telephones are located close to each other, they should re-code to indicate circuit or function. They should be labeled to indicate circuit or function.

5.3.11.1.5 Press-to-talk button. If a manual press-to-talk button is used, it shall be convenient to both left- and right-handed people and designed to avoid inadvertent actuation.

5.3.11.1.6 Switching. Switching should be designed and programmed to minimize delay in making desired connections under both normal and emergency conditions. Switching shall be programmed to give senior personnel and critical functions automatic priority access to the switching system.

5.3.11.1.7 High-noise environment. Telephones located in high noise areas (80 dBA to 95 dBA) should have manual controls to boost the ringer and speaker output levels to compensate for ambient noise. If at all possible, telephones should not be used in environments greater than 95 dBA unless sufficient handset output and unless noise attenuation is available and/or a noise control booth is used to reduce the noise to 95 dBA or less.

5.3.11.2 Sound-powered telephones.

5.3.11.2.1 Feedback. Within engineering constraints imposed by sound-powering, the system should provide in-phase feedback to the user. Feedback or sidetone level can be used to control talker's vocal effort within limits. Typically feedback or sidetone is 3 to 6 dB lower than the produced speech. This increases the vocal effort and improves the signal-to-noise ratio.

5.3.11.2.2 Over-the-ear headsets. Headsets should be used when any of the following conditions exists: (a) ambient noise levels are so high that protective devices are required to protect the ears of the listener; (b) different listeners must receive different messages; and (c) reverberation interferes with loudspeaker listening. Use binaural headsets if the listeners will be in intense noise. Earphone cushioning should provide comfort for extended periods of wear. Earphones should cover the outer ear without causing uncomfortable pressure. The earpiece should be held firmly in place, yet be easy to remove. A well-marked and accessible place should be provided for headset stowage. Corded headsets should have jacks placed in such a way and have cords sufficiently long that the cord does not interfere with the operator's activities.

5.3.11.2.3 Ringing. If ringing is not installed, then the user should be able to switch the sound-powered transmitter to the paging system so that a desired party can be called to the line.

5.3.11.2.4 Jack provisions. Plug-in jacks should be provided within the operational area.

5.3.11.2.5 Switching. When used, patch panels should be conspicuously marked and located in reasonably accessible places. Terms used to describe the connections should be clear to the operator; wiring codes should not be used.

Downloaded from http://www.everyspec.com on 2010-01-26T2:50:27.

5.3.11.2.6 Dedicated emergency circuits. Dedicated lines should be provided for frequent or emergency communications.

5.3.11.2.7 System access locations. System stations should be located to ensure easy access and a relatively quiet location.

5.3.12 3D audio displays.

5.3.12.1 Use. 3D audio displays may be used in an environment with numerous and important spatial cues or where an operator is likely to be highly tasked visually (e.g., fighter cockpits) to enhance situation awareness, segregate multiple channels, or rapidly redirect the user's vision.

5.3.12.2 Presentation format. For most applications, 3D audio displays should present data in a two dimensional format (i.e., discrete sound source azimuth and elevation with a constant distance).

5.3.12.3 Angular separation. Angular separation between discrete sounds should be not less than 5° in the horizontal plane and not less than 10° in the vertical plane.

5.3.12.4 Binaural vs. monaural. 3D audio cues should be presented binaurally.

5.3.13 Speech displays

5.3.13.1 Use. Speech displays may be used where mobility is necessary or where the user's eyes are busy. They should announce discrete events, not continuous status information. They should not be used if display use frequency is high, if simultaneous display of multiple messages is required, if messages are long, if messages include information that must be memorized, or if messages include a series of instructions that must be remembered.

5.3.13.2 Output rate. All speech displays should provide an output rate between 150 and 180 words per minute.

5.3.13.3 Digitized speech. Digitized speech should be used in preference to synthesized speech.

5.3.13.4 Message priority control. Where simultaneous messages could occur, they should be prioritized so that the initial presentation of the most critical message receives transmission priority and overrides lower priority messages.

5.3.13.5 Instructional display structure. Instructional prompt messages should be structured with the desired goal first, followed by the desired action (e.g., "to delete, press enter" rather than "press enter to delete"). Prompts should be repeated following a user command or 10 seconds of inactivity.

5.3.13.6 Message cancel capability. A manual cancellation capability shall be provided for all speech displays after the initial presentation.

5.3.13.7 Repeat capability. User-commanded message repetition should be provided.

5.3.14 Speech intelligibility.

5.3.14.1 General. When information concerning the speech intelligibility of a system is required, three recommended methods are available, with the appropriate selection being dependent upon the requirements of the test.

a. The modified rhyme test (MRT) described in ANSI 3.2 should be used to measure the communication performance of most military communication systems. It is easy to administer and requires only a short training time of 1-2 hours.

Downloaded from http://www.everyspec.com on 2010-01-26T2:50:27.

b. The phonetically balanced (PB) word test should be used when the highest accuracy and sensitivity are required. It is difficult to administer accurately and requires a long training time (typically 20-40 hours) before the responses of the listeners have peaked and are stable.

c. The articulation index (AI) and/or the speech transmission index (STI) are predictive estimators of intelligibility. They should be used to estimate system performance during the concept and design phase but not as a substitute for intelligibility test when system hardware is available.

5.3.14.2 Criteria. The intelligibility criteria shown in Table VI shall be used for voice communication. The efficiency of communications needed and the type material to be transmitted shall determine which of the three communication requirements of Table VI is to be selected.

TABLE VI. **Intelligibility criteria for voice communication systems**

COMMUNICATION REQUIREMENT	SCORE		
	PB	MRT	AI[1]
Exceptionally high intelligibility; separate syllables understood	90%	97%	0.7
Normal acceptable intelligibility; about 98% of sentences correctly heard; single digits understood	75%	91%	0.5
Minimally acceptable intelligibility; limited standardized phrases understood; about 90% sentences correctly heard (not acceptable for operational equipment)	43%	75%	0.3

[1] The Articulation Index (AI) should not be used to measure intelligibility of synthetic speech because some key acoustic features are not present in non-human “speech.” Instead, intelligibility of synthetic speech should be measured using representative panels of talkers and listeners.

Downloaded from http://www.everyspec.com on 2010-01-26T2:50:27.

5.4 Controls.

5.4.1 General criteria.

5.4.1.1 Selection.

5.4.1.1.1 Distribution of workload. Controls shall be selected and distributed so that none of the operator's limbs will be overburdened.

5.4.1.1.2 G-loading. Where applicable, control selection shall consider operation under variable g-loading on the operator.

5.4.1.1.3 Multirotation controls. Multirotation controls shall be used when precision is required over a wide range of adjustment.

5.4.1.1.4 Detent controls. Detent controls shall be selected whenever the operational mode requires control operation in discrete steps.

5.4.1.1.5 Stops. Stops shall be provided at the beginning and end of the range of control positions if the control is not to be operated beyond the indicated end positions or specified limits.

5.4.1.1.6 Power assist. Power assist may be used to reduce the magnitude of force inputs required to adjust or actuate controls. When servo-amplifier devices are used, appropriate proportional resistance or force feedback should be provided to give the operator the feel of unpowered control.

5.4.1.2 Direction of movement.

5.4.1.2.1 Consistency of movement. Direction of control movement shall be consistent with the related movement of an associated display, equipment component, or vehicle. In general, movement of a control forward, clockwise, to the right, up, or pressing a control, shall turn the equipment or component on, cause the quantity to increase, or cause the equipment or component to move forward, clockwise, to the right, or up. Valve controls are excepted (see 5.4.1.2.4).

5.4.1.2.2 Multidimensional operation. When the vehicle, equipment, or components may move in more than two dimensions, exception to 5.4.1.2.1 shall be made if necessary to ensure consistency of anticipated response (e.g., forward motion of a directional control causes some vehicles to dive or otherwise descend rather than to simply move forward). When several controls are combined in one device, responses shall be compatible with control movement (e.g., control motion to the right is compatible with clockwise roll, right turn, and direct movement to the right).

5.4.1.2.3 Operator-control orientation. Controls shall be oriented with respect to the operator. Where a vehicle operator may use two or more stations, the controls shall cause movement oriented to the operator at the effecting station, unless remote visual reference is used.

5.4.1.2.4 Valve controls. Rotary valve controls should open the valve with a counterclockwise motion. Valve controls shall be provided with double-ended arrows showing the direction of operations and labeled at each end to indicate the functional result (e.g., open and close).

5.4.1.3 Arrangement and grouping.

5.4.1.3.1 Grouping. Controls which are operated in a task-driven sequence or which are operated together shall be grouped together along with their associated displays. When several steps of a sequence are selected by one control, the steps shall be arranged by order of occurrence to minimize control movements and prevent cycling through unnecessary steps. Cycling through the control's ON/OFF position shall be avoided.

Downloaded from http://www.everyspec.com on 2010-01-26T2:50:27.

5.4.1.3.2 Sequential operation. Where sequential operations follow a fixed pattern, controls shall be arranged to facilitate operation (e.g., a left-to-right/top-to-bottom pattern, as on a printed page).

5.4.1.3.3 Location of primary controls. The most important and frequently used controls (particularly rotary controls and those requiring fine settings) shall have the most favorable position for ease of reaching and grasping.

5.4.1.3.4 Consistency. The arrangement of functionally similar, or identical, primary controls shall be consistent from panel to panel throughout the system, equipment, or vehicle, e.g., a movement of a control to the right or left should result in a corresponding movement of a displayed element to the right or left.

5.4.1.3.5 Remote controls. Controls, operated at a position remote from the display, equipment, or controlled vehicle, shall be arranged to facilitate direction-of-movement consistency.

5.4.1.3.6 Maintenance and adjustment. In general, controls used solely for maintenance and adjustment shall be covered during normal equipment operation, but shall be readily accessible and visible to the maintenance technician when required.

5.4.1.3.7 Spacing. Minimum spacing between controls shall comply with Table VII. Spacing between a control and any adjacent obstruction shall be as shown by the figures referenced by Table VII. Minimum spacing shown shall be increased for operation with gloves, mittens, or NBC protective handwear, when such operation is a system requirement.

TABLE VII. **Minimum, edge-to-edge separation distances for controls**

	TOGGLE SWITCHES	PUSH BUTTONS*	CONTINUOUS ROTARY CONTROLS	ROTARY SELECTOR SWITCHES	DISCRETE THUMBWHEEL CONTROLS
TOGGLE SWITCHES	SEE FIG 14	13 mm (0.5 in)	19 mm (0.75 in)	19 mm (0.75 in)	13 mm (0.5 in)
PUSH BUTTONS[1]	13 mm (0.5 in)	SEE FIG 12	13 mm (0.5 in)	13 mm (0.5 in)	13 mm (0.5 in)
CONTINUOUS ROTARY CONTROLS	19 mm (0.75 in)	13 mm (0.5 in)	SEE FIG 8	25 mm (1.0 in)	19 mm (0.75 in)
ROTARY SELECTOR SWITCHES	19 mm (0.75 in)	13 mm (0.5 in)	25 mm (1.0 in)	SEE FIG 5	19 mm (0.75 in)
DISCRETE THUMBWHEEL CONTROLS	13 mm (0.5 in)	13 mm (0.5 in)	19 mm (0.75 in)	19 mm (0.75 in)	SEE FIG 7

[1]for pushbuttons not separated by barriers

NOTE: All values are for one hand operation.

Downloaded from http://www.everyspec.com on 2010-01-26T2:50:27.

5.4.1.3.8 Control interference. The size, shape, and location of controls shall be designed to ensure that the operation of any one control shall not interfere with the operator's ability to use other controls and to perform other duties.

5.4.1.3.9 Emergency shutoff controls. Emergency shutoff controls shall be positioned within easy reach of the operator (also see 5.4.1.8).

5.4.1.4 Coding.

5.4.1.4.1 Methods and requirements. The use of a coding mode (e.g., size and color) for a particular application shall be governed by the relative advantages and disadvantages of each type of coding (see Table VIII). Where coding is used to differentiate among controls, application of the code shall be uniform throughout the system.

TABLE VIII. **Advantages and disadvantages of various types of control coding**

	TYPE OF CODING					
ADVANTAGES	LOCATION	SHAPE	SIZE	MODE OF OPERATION	LABELING	COLOR
Improves visual identification.	X	X	X		X	X
Improves nonvisual identifica-tion (tactual and kinesthetic).	X	X	X	X		
Helps standardization.	X	X	X	X	X	X
Aids identification under low levels of illumination and colored lighting.	X	X	X	X	(When trans-illuminated)	(When trans-illuminated)
May aid in identifying control position (settings).		X		X	X	
Require little (if any) training; is not subject to forgetting.					X	
DISADVANTAGES						
May require extra space.	X	X	X	X	X	
Affects manipulation of the control (ease of use).	X	X	X	X		
Limited in number of available coding categories.	X	X	X	X		X
May be less effective if operator wears gloves.		X	X	X		
Controls must be viewed (i.e., must be within visual areas and adequately illuminated).					X	X

Downloaded from http://www.everyspec.com on 2010-01-26T2:50:27.

5.4.1.4.2 Location-coding. Controls associated with similar functions should be in the same relative location from work station to work station and from panel to panel.

5.4.1.4.3 Size-coding. No more than three different sizes shall be used to code controls for discrimination by absolute size. Controls used for performing the same function on different items of equipment shall be the same size. When knob diameter is used as the coding parameter, the differences between diameters shall be not less than 13 mm (0.5 in). When knob thickness is the coding parameter, the differences between thicknesses shall be not less than 10 mm (0.4 in).

5.4.1.4.4 Shape-coding. Shape-coding may be used to ensure identification of control knobs or handles by "feel" where visual identification is not possible, diversion of operator visual attention to identify the proper control would detract from mission accomplishment, or where the consequences of incorrect control selection would be severe. When shape-coding is used:

a. The coded feature shall not interfere with ease of control manipulation.

b. Shapes shall be identifiable by hand and by eye regardless of the position and orientation of the control knob or handle.

c. Shapes shall be tactually identifiable when gloves must be worn.

d. The number of shapes to be identified by each operator based on absolute discrimination shall be not more than 10.

e. Shape-coded knobs and handles shall be positively and non-reversibly attached to their shafts to preclude incorrect attachment when replacement is required.

f. Shapes should be associated with or resemble the control function, and not alternate functions.

5.4.1.4.5 Color-coding. Colors may be used only to supplement other control coding methods. Not more than five colors should be used.

5.4.1.4.5.1 Choice of colors. Controls shall be black (17038, 27038, or 37038) or gray (26231 or 36231). If color coding is required, only the following colors identified in FED-STD-595 shall be selected for control coding:

a. Red, 11105, 21105, 31105

b. Green, 14187

c. Orange-Yellow, 13538, 23538, 33538

d. White, 17875, 27875, 37875

e. Blue, 15123 shall be used if an additional color is absolutely necessary.

Where specular reflection (glare) or reduced friction could degrade task performance, gloss finishes (10000 series in FED-STD-595) shall not be used on controls .

5.4.1.4.5.2 Immediate action controls. Color coding of immediate action controls for aircraft shall conform to MIL-M-18012.

5.4.1.4.5.3 Relation to display. When color-coding must be used to relate a control to its corresponding display, the same color shall be used for both the control and the display.

Downloaded from http://www.everyspec.com on 2010-01-26T2:50:27.

5.4.1.4.5.4 Control panel contrast. Sufficient color/brightness contrast between the control and its background shall be provided to ensure prompt and accurate identification by the operator.

5.4.1.4.5.5 Ambient lighting and color-coding exclusion. Color-coding shall be compatible with anticipated ambient light during the mission. Color-coding shall not be used as the primary identification medium if the spectral characteristics of such ambient light or the operator's adaptation to that light varies as the result of such factors as solar glare, filtration of light, and variation from natural to artificial light. If red lighting is to be used during a portion of the mission, controls that would otherwise be coded red shall be coded by orange-yellow and black striping.

5.4.1.5 Labeling of controls. Control labeling shall conform to 5.5.

5.4.1.6 Compatibility with handwear. Controls shall be compatible with handwear to be utilized in the anticipated environment. Unless otherwise specified, all dimensions cited herein are for bare hands and should be adjusted where necessary for use with gloves or mittens.

5.4.1.7 Blind operation. Where "blind" operation is necessary, hand controls shall be shape-coded, or separated from adjacent controls by at least 125 mm (5 in).

5.4.1.8 Prevention of accidental actuation.

5.4.1.8.1 Location and design. Controls shall be designed and located so that they are not susceptible to being moved accidentally or inadvertently, particularly critical controls where such operation might cause equipment damage, personnel injury, or system performance degradation.

5.4.1.8.2 Internal controls. Internal or hidden controls should be protected from inadvertent actuation or movement, because it is usually not obvious that such controls have been disturbed and it may be difficult and time consuming to locate and readjust them.

5.4.1.8.3 Rapid operation. Any method of protecting a control from inadvertent operation shall not preclude operation within the time required.

5.4.1.8.4 Methods. If a control must be protected from accidental actuation, one or more of the following methods shall be used:

a. Locate and orient the control so that the operator is not likely to strike or move it accidentally in the normal sequence of control movements.

b. Recess, shield, or otherwise surround the control by physical barriers. The control shall be entirely contained within the recess or barrier envelope.

c. Cover or guard the control. Safety or lock wire shall not be used.

d. Interlock the control so that extra movement (e.g., a side movement out of a detent position or a pull-to-engage clutch) or the prior operation of a related or locking control is required.

e. Provide the control with movement resistance (e.g., viscous or coulomb friction, spring-loading, or inertia) so that definite or sustained effort is required for actuation.

f. Lock the control to prevent its quickly passing through a position when strict sequential activation is necessary (i.e., the control is moved only to the next position, then delayed).

g. Design the control for operation by rotary action.

Downloaded from http://www.everyspec.com on 2010-01-26T2:50:27.

5.4.1.8.5 Dead man controls. Dead man controls, which will result in system shut-down to a non-critical operating state when force or input is removed, shall be utilized wherever operator incapacity can produce a critical system condition.

5.4.1.8.6 Foot-operated controls.

5.4.1.8.6.1 Use. Foot-operated controls may be used when:

a. control operation requires either greater force than the upper body can provide or force close to an upper body fatigue threshold,

b. the operator's hands are generally occupied by other manual control tasks at the same moment that an additional control action is required,

c. specific foot-operated controls have been so well established that the operator expects such operating functions to be performed using foot controls (e.g., aircraft rudder/brake pedals, automotive clutch, brake, and accelerator pedals), or

d. a safety "shut-down" control is required during an operation in which the operator's hands cannot be freed to reach a safety switch.

5.4.1.8.6.2 Avoidance. Foot-operated controls should not be used when:

a. a standing operator is confronted with a sensitive balancing requirement (e.g., a moving platform where balancing on the non-operating foot may become difficult as the operating foot is moved from a support to actuating position),

b. precise control operations are required, or

c. selection from among a great many separate controls is required.

5.4.1.8.6.3 Operation. Foot controls shall be located and designed so they can be operated in as natural a pattern as practicable and should not require the operator to:

a. perform frequent, maximum reaching,

b. hold the leg or foot in awkward position for extended periods of time,

c. operate a control frequently or for an extended period of time while sitting in a twisted position (i.e., pedals shall be laid out symmetrically with reference to the operator's principal operating orientation),

d. apply maximum force frequently or for extended duration,

e. search for a particular foot control in order to select the proper one, or

f. use a foot control located where (1) it might be stepped on and inadvertently actuated, or (2) shifting the foot from one control to another creates conditions where the foot or clothing might be entrapped by an intervening control.

Downloaded from http://www.everyspec.com on 2010-01-26T2:50:27.

5.4.1.8.6.4 Configuration and placement. Configuration and placement of foot-operated controls shall accommodate the anthropometry of the operator's foot wearing operational shoes or boots. Each foot-operated control shall be located so that (a) actuating it by one foot does not interfere with actuating a control by the other foot and (b) foot and leg movements are natural and easily accomplished within the work station where the foot controls are located.

5.4.1.9 Hazardous operations.

5.4.1.9.1 Interlocks and alarms. Where practical, the critical position of a control that initiates hazardous operations (e.g., ignition, crane movement) shall activate visible and audible warning signals in the affected work area.

5.4.1.9.2 Consistency of use. A control used for a critical/emergency use function shall be dedicated to that function only.

5.4.2 Rotary controls.

5.4.2.1 Discrete adjustment rotary controls.

5.4.2.1.1 Rotary selector switches.

5.4.2.1.1.1 Use. Rotary selector switches (see Fig. 5) should be used for discrete functions when three or more detented positions are required. Rotary selection switches should not be used for a two-position function unless prompt visual identification of control position is of primary importance and speed of control operation is not critical.

5.4.2.1.1.2 Moving pointer. Rotary selector switches should be designed with a moving pointer and a fixed scale.

5.4.2.1.1.3 Shape. Moving pointer knobs shall be bar shaped with parallel sides and its index end tapered to a point. Exceptions may be made when pointer knobs are shape-coded or when space is restricted and torque is light. Shape-coding shall be used when a group of rotary controls, used for different functions, is placed on the same panel and control confusion might otherwise result.

5.4.2.1.1.4 Positions. A rotary selector switch that is not visible to the operator during normal system operation shall have no more than 12 positions. A rotary switch that is constantly visible to the operator shall have not more than 24 positions. In addition, the following criteria shall apply:

a. Rotary switch positions shall not be placed opposite each other unless knob shape precludes confusion as to which end of the knob is the pointer.

b. Switch resistance shall be elastic, build up, then decrease as each position is approached, so that the control snaps into position without stopping between adjacent positions.

5.4.2.1.1.5 Contrast. A reference line shall be provided on rotary switch controls. The luminance contrast of this line with the control color shall be not less than 3.0 under all lighting conditions.

5.4.2.1.1.6 Parallax. The knob pointer shall be mounted sufficiently close to its scale to minimize parallax between the pointer and the scale markings. When viewed from the normal operator's position, the parallax errors shall not exceed 25% of the distance between scale markings.

5.4.2.1.1.7 Attachment. Selector switch shafts and knobs shall be designed for only intended installation orientation.

Downloaded from http://www.everyspec.com on 2010-01-26T2:50:27.

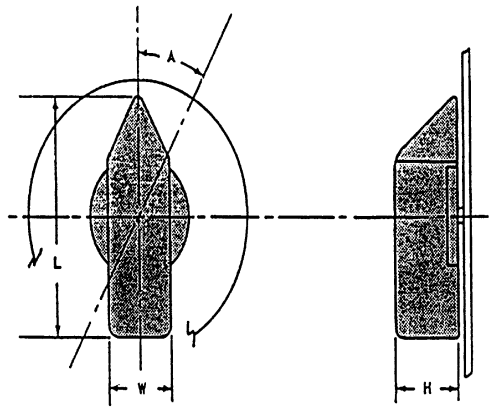

	DIMENSIONS			RESISTANCE
	L Length	W Width	H Depth	
Minimum	25 mm (1 in.)		16 mm (0.625 in.)	115 mN · m (1 in. –lb)
Maximum	100 mm (4 in.)	25 mm (1 in.)	75 mm (3 in.)	680 mN · m (6 in. –lb)
	DISPLACEMENT		SEPARATION	
	A			
	•	••	One-Hand Random	Two-Handed Operation
Minimum	262 mrad (15°)	525 mrad (30°)	25 mm (1 in.)	75 mm (3 in.)
Maximum	700 mrad (40°)	1570 mrad (90°)	•	•
Preferred	•	•	50 mm (2 in.)	125 mm (5in.)

* For facilitating performance

** When special engineering requirements demand large separation or when tactually ("blind") positioned controls are required.

FIGURE 5. **Rotary selector switch**

5.4.2.1.1.8 Dimensions, resistance, displacement, and separation. Control dimensions, resistance, displacement, and separation between adjacent edges of areas swept by rotary selector switches should conform to the criteria in Figure 5.

5.4.2.1.2 Key-operated switches (KOS). (See Figure 6)

5.4.2.1.2.1 Use. Where security is a higher priority than speed of control actuation, KOS may be used to prevent unauthorized operation. Ordinarily, they control system operation by go/no-go.

5.4.2.1.2.2 Dimensions, displacement, and resistance. Dimensions, displacement, and resistance shall conform to the criteria in Figure 6.

5.4.2.1.2.3 Color, shape and size coding. Color, shape, or size coding or a combination may be used as follows:

a. Color may be used to aid in identifying various keys by function or use location and when

Downloaded from http://www.everyspec.com on 2010-01-26T2:50:27.

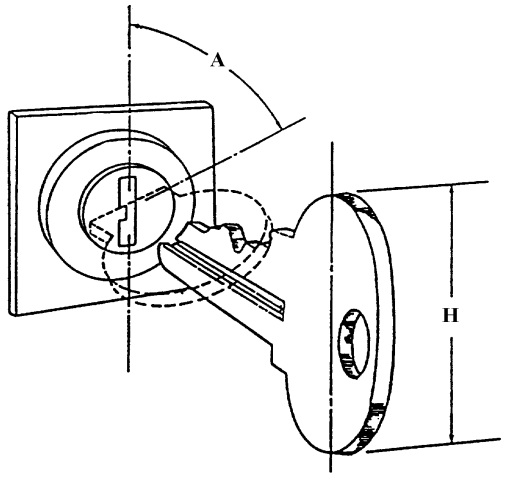

	DISPLACEMENT (A)	HEIGHT (H)	RESISTANCE
MINIMUM	525 mrad (30°)	13 mm (0.5 in.)	115 mN·m (1 in. –lb)
MAXIMUM	1570 mrad (90°)	75 mm (3 in.)	680 mN·m (6 in. –lb)

FIGURE 6. **Key-operated switch (Single function)**

illumination is adequate to differentiate the colors. Red (11105 or 21105 of FED-STD-595) shall be reserved for emergency functions.

b. Shape-coding may be used when it is desirable to identify a given key by feel. When shape coding is used, sharp corners shall be avoided.

c. Size-coding, within the height limits of Figure 6, may also be used if no more than two sizes are employed.

5.4.2.1.2.4 Marking and labeling. Keylock switch applications shall include appropriate position markings and labels (see 5.5).

5.4.2.1.2.5 Multifunction, key-operated switches. The “OFF” position of multifunction, key-operated switches should be located at 300°. Total angular displacement should be not greater than 120°.

5.4.2.1.2.6 Other requirements.

a. Keys with teeth on both edges, which fit the lock with either side up or forward, are preferred.

Downloaded from http://www.everyspec.com on 2010-01-26T2:50:27.

b. Keys with a single row of teeth should be inserted into the lock with the teeth pointing up or forward.

c. Locks should be oriented so the key's vertical position is the OFF position.

d. Operators should normally not be able to remove the key from the lock unless the switch is turned OFF.

e. Actuation of an item by a key-operated switch should be accomplished by turning the key clockwise from the vertical OFF position.

5.4.2.1.3 Discrete thumbwheel controls.

5.4.2.1.3.1 Application. Thumbwheel controls may be used if the function requires a compact digital control-input device (for a series of numbers) and a readout of these manual inputs for verification. The use of thumbwheels for any other purposes is discouraged. Detent indexing units should provide 10 positions (0 - 9) in digital or binary (3 or 4 bits and complement) outputs.

5.4.2.1.3.2 Shape. Each position around the circumference of a discrete thumbwheel shall have a concave surface or shall be separated by a high-friction area which is raised from the periphery of the thumbwheel. The thumbwheels shall not preclude viewing the digits within a 30° viewing angle to the left and right of a perpendicular to the thumbwheel digits.

5.4.2.1.3.3 Coding. Thumbwheel controls may be coded by location, labeling, and color (e.g., reversing the colors of the least significant digit wheel as on typical odometers). Where used as input devices, thumbwheel switch Off or Normal positions should be color coded to permit a visual check that the digits have been reset to their Off or Normal positions.

5.4.2.1.3.4 Direction of movement. Moving the thumbwheel edge forward, upward, or to the right shall increase the setting.

5.4.2.1.3.5 Numerals.

5.4.2.1.3.5.1 Internal illuminance. Where ambient illumination will provide display brightness below 3.5 cd/m^2 (1 ft-L), the thumbwheel characters shall be internally illuminated, appear against a black background, and have dimensions approximating the following: height = 4.8 mm (3/16 in), height-to-width ratio = 3:2, and height-to-stroke width ratio = 10:1.

5.4.2.1.3.5.2 External illuminance. Where ambient illumination will provide a display luminance above 3.5 cd/m^2 (1 ft-L), internal illumination is not required. Digits should be bold, black numerals engraved on a light (or white) thumbwheel background, with dimensions as specified in 5.4.2.1.3.5.1, except that the height-to-stroke width ratio should be approximately 5:1

5.4.2.1.3.6 Visibility. Thumbwheel design shall permit viewing of inline digital read-out from all operator positions.

5.4.2.1.3.7 Dimensions. Control dimensions shall conform to the criteria in Figure 7.

5.4.2.1.3.8 Resistance. Detents shall be provided for discrete position thumbwheels. Resistance shall be elastic, build up and then decrease as each detent is approached so that the control snaps into position without stopping between adjacent detents. The resistance shall be within the limits indicated in Figure 7.

Downloaded from http://www.everyspec.com on 2010-01-26T2:50:27.

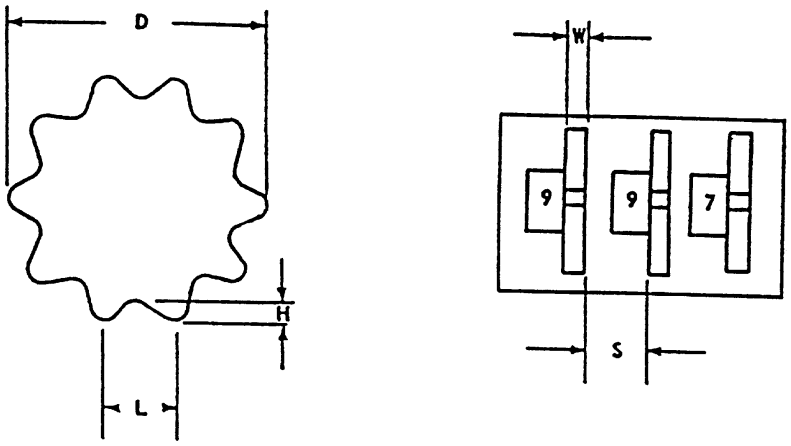

	D DIAMETER	L TROUGH DISTANCE	W WIDTH	H DEPTH	S SEPARATION	RESISTANCE
MINIMUM	29 mm (1.125 in)	11 mm (0.43 in)	3 mm (0.125 in)	3 mm (0.125 in)	10 mm (0.4 in)	1.7 N (6 oz)
MAXIMUM	75 mm (3 in)	19 mm (0.75 in)		6 mm (0.25 in)		5.6 N (20 oz)

FIGURE 7. **Discrete thumbwheel control**

5.4.2.1.3.9 Separation. The separation between adjacent edges of thumbwheel controls shall conform to the criteria in Figure 7 and shall be sufficient to preclude accidental actuation of adjacent controls during normal setting.

5.4.2.2 Continuous adjustment rotary controls.

5.4.2.2.1 Knobs.

5.4.2.2.1.1 Use. Knobs should be used when low forces or precise adjustments of a continuous variable are required. For most tasks, a moving knob with fixed scale is preferred over a moving scale with fixed index. If positions of single revolution controls must be distinguished, a pointer or marker should be available on the knob.

5.4.2.2.1.2 Dimensions, torque and separation. The dimensions of knobs shall be within the limits specified in Figure 8. Within these ranges, knob size is relatively unimportant, provided the resistance is low and the knob can be easily grasped and manipulated. When panel space is extremely limited, knobs should approximate the minimum values and should have resistance as low as possible without permitting the setting to be changed by vibration or merely touching the control. Resistance and separation between adjacent edges of knobs shall conform to Figure 8.

Downloaded from http://www.everyspec.com on 2010-01-26T2:50:27.

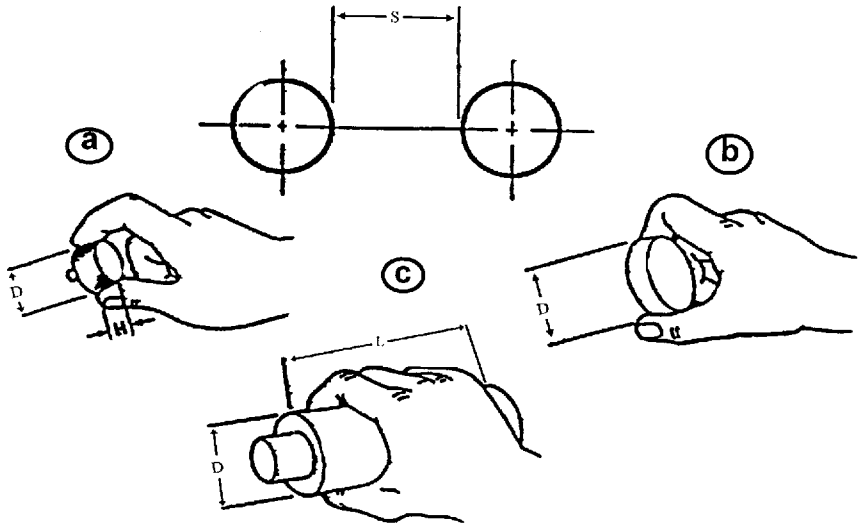

	DIMENSIONS					
	a Fingertip Grasp		b Thumb and Finger Encircled		c Palm Grasp	
	H Height	D Diameter	H Height	D Diameter	D Diameter	L Length
Minimum	13 mm (0.5 in.)	10 mm (0.4 in.)	13 mm (0.5 in.)	25 mm (1.0 in.)	38 mm (1.5 in.)	75 mm (3.0 in.)
Maximum	25 mm (1.0 in.)	100 mm (4.0 in.)	25 mm (1.0 in.)	75 mm (3.0 in.)	75 mm (3.0 in.)	-

	TORQUE		SEPARATION	
	*	**	S One Hand Individually	S Two Hands Simultaneously
Minimum	-	-	25 mm (1.0 in.)	50 mm (2.0 in.)
Optimum	-	-	50 mm (2.0 in.)	125 mm (5 in.)
Maximum	32 mN·m (4.5 in. –oz)	42 mN·m (6.0 in. –oz)	-	-

* = 25 mm (1.0 in) diameter knobs
**> 25 mm (1.0 in) diamter knobs.

FIGURE 8. **Knobs**

5.4.2.2.2 Ganged control knobs.

5.4.2.2.2.1 Application. Ganged knob assemblies may be used in limited applications when panel space is at a premium. Two-knob assemblies are preferred. Three-knob configurations should be avoided. Ganged knob configurations should not be used under the following conditions:

a. Extremely accurate or rapid operations are required.

Downloaded from http://www.everyspec.com on 2010-01-26T2:50:27.

b. Frequent changes are necessary.

c. Heavy gloves must be worn by the operator.

d. Equipment is exposed to the weather or used under field conditions.

5.4.2.2.2.2 Dimensions and separation. Dimensions and separation should conform to Figure 9.

5.4.2.2.2.3 Resistance. Resistance shall conform to requirements in Figure 9. Knobs should be serrated. Fine serrations should be used on precise adjustment knobs; coarse serrations should be used on gross adjustment knobs.

5.4.2.2.2.4 Marking. An indexing mark or pointer shall be provided on each knob. Marks or pointers should differ sufficiently to make it apparent which knob indexing mark is being observed.

5.4.2.2.2.5 Knob/display relationship. When each knob of a ganged assembly must be related to an array of visual displays, the knob closest to the panel shall relate to the left-most display in a horizontal array, or the uppermost display in a vertical array (see Figure 9).

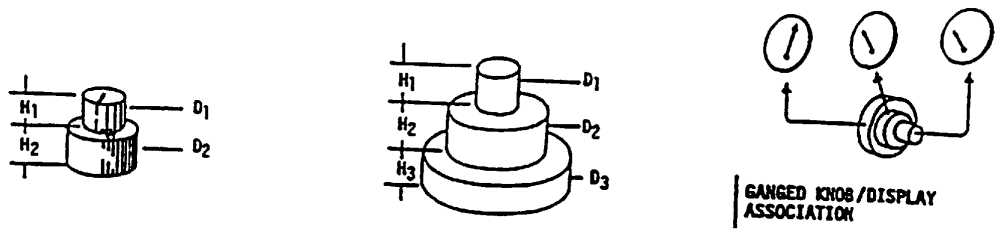

	DIMENSIONS									
	TWO KNOB ASSEMBLY				THREE KNOB ASSEMBLY					
	H_1	H_2	D_1	D_2	H_1	H_2	H_3	D_1	D_2	D_3
MINIMUM	16 mm (0.625”)	13 mm (0.5”)	13 mm (0.5”)	22 mm (0.875”)	19 mm (0.75”)	19 mm (0.75”)	6 mm (0.25”)	13 mm (0.5”)	44 mm (1.75”)	75 mm (3”)
MAXIMUM				100 mm (4”)						100 mm (4”)

	TORQUE		SEPARATION			
	*	**	ONE HAND INDIVIDUALLY		TWO HANDS SIMULTANEOUSLY	
		BARE	BARE	GLOVED	BARE	GLOVED
MINIMUM			25 mm (1”)	63 mm (2.5”)	50 mm (2”)	90 mm (3.5”)
OPTIMUM			50 mm (2”)	90 mm (3.5”)	75 mm (3”)	100 mm (4”)
MAXIMUM	32 mN·m (4.5 in. –oz.)	42 mN·m (6 in. –oz.)				

* To and including 25 mm (1”) diameter knobs.
** Greater than 25 mm (1”) diameter knobs.

FIGURE 9. **Ganged knobs**

Downloaded from http://www.everyspec.com on 2010-01-26T2:50:27.

5.4.2.2.2.6 Inadvertent operation. When it is critical to prevent inadvertent operation of one knob as the other is being adjusted, a secondary knob control action shall be required (e.g., pressing the top knob before it can be engaged with its control shaft). Where inadvertent movement is undesirable but not critical, knob diameter/depth relationships should be optimized as shown in Figure 9. Contrasting colors between knobs may also be used to improve knob identification.

5.4.2.2.3 Continuous adjustment thumbwheel controls

5.4.2.2.3.1 Use. Continuously adjustable thumbwheel controls may be used as an alternative to rotary knobs when the application will benefit from the compactness of the thumbwheel device.

5.4.2.2.3.2 Orientation and movement. Thumbwheels shall be oriented and move in the directions specified in Figure 10. If a thumbwheel is used to affect vehicle motion, movement of the thumbwheel forward or up shall cause the vehicle to move down or forward.

5.4.2.2.3.3 Turning aids. The rim of a thumbwheel shall be serrated or provided with a high friction surface to aid the operator in manipulating the control.

5.4.2.2.3.4 Dimensions, separation and resistance. Dimensions, separation and resistance shall conform to criteria in Figure 10.

5.4.2.2.3.5 Labeling and visibility. Marking and labeling shall conform to requirements herein, with respect to visibility of markings and legibility of label alphanumerics.

5.4.2.2.3.6 OFF position. A detent shall be provided for continuous thumbwheels having an OFF position.

5.4.2.2.4 Cranks.

5.4.2.2.4.1 Use. Cranks should be used for tasks that require many rotations of a control, particularly where high rates or large forces are involved. For tasks that involve large slewing movements, plus small, fine adjustments, a crank handle may be mounted on a knob or handwheel, the crank for slewing and the knob or handwheel for fine adjustments. Where cranks are used for tuning, or other processes involving numerical selection, each rotation should correspond to a multiple of 1, 10, 100, etc. Simultaneously operated handcranks should be used in preference to other two-axis controllers where extreme precision is required in setting crosshairs or reticles as in map readouts or optical sighting mechanisms (as opposed to tracking). This type of control may also be used in other applications requiring x-y control provided there is no requirement for rapid or frequent operation. The gear ratio and dynamic characteristics of such cranks shall allow precise placement of the follower (e.g., crosshairs) without overshooting or undershooting or requiring successive corrective movements.

5.4.2.2.4.2 Grip handle. The crank grip handle shall be designed so that it turns freely around its shaft.

5.4.2.2.4.3 Dimensions, resistance and separation. Dimensions, resistance and separation between adjacent swept circular areas of cranks shall conform to the criteria of Figure 11.

5.4.2.2.4.4 Location. Cranks that are to be operated from a standing position should be mounted between 900 and 1200 mm (35 - 47 in.) above the floor.

5.4.2.2.4.5 Folding handle. If a crank handle could become a hazard to persons passing by, or if it is critical that the handle not be inadvertently displaced by being accidentally bumped, a folding handle type control should be used. Such a handle shall be spring-loaded to keep it extended in the cranking position when in use and folded when not in use.

Downloaded from http://www.everyspec.com on 2010-01-26T2:50:27.

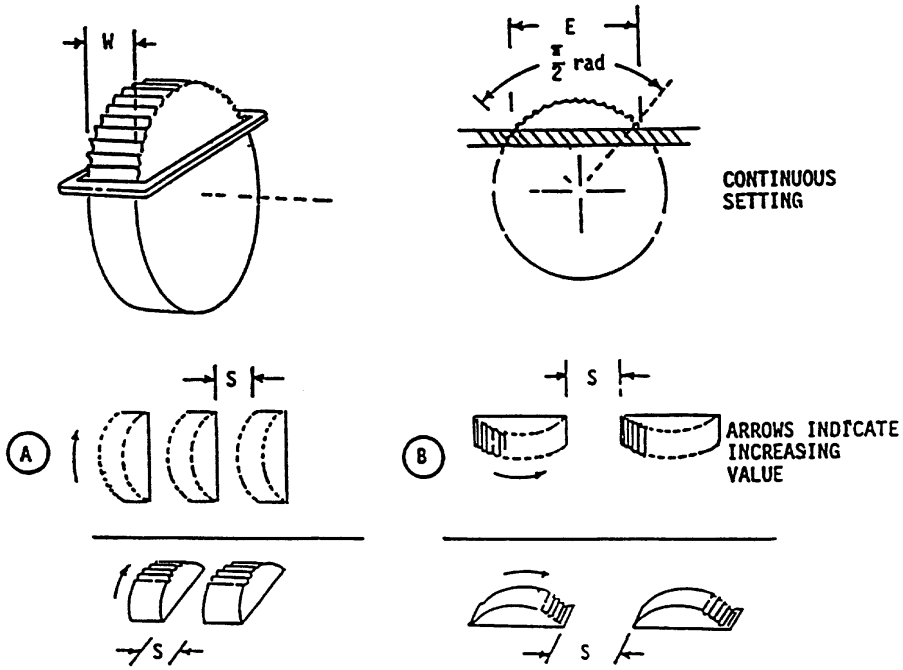

	E RIM EXPOSURE	W WIDTH	S		RESISTANCE
			A	B	
MINIMUM	25 mm * (1”)	3 mm * (0.125”)	25 mm (1”) Add 13 mm (1/2”) for gloves	50 mm (2”) Add 25 mm (1”) for gloves	TO MINIMIZE EFFECTS OF INADVERTENT INPUT IF OPERATOR SUBJECT TO MOTION
MAXIMUM	100 mm (4”)	23 mm (0.875”)	N/A	N/A	3.3 N (12 oz.)

* Preferred. Some miniature applications may require less.

FIGURE 10. **Continuous adjustment thumbwheel**

5.4.2.2.5 Handwheels (two-hand operated).

5.4.2.2.5.1 Use. Handwheels, designed for nominal two-hand operation, should be used when the breakout or rotational forces are too high to be easily overcome with a one-handed control, provided that two hands are available for this task. Typical applications are steering, latch securing, valve opening/closing, and direct-linkage adjustment.

Downloaded from http://www.everyspec.com on 2010-01-26T2:50:27.

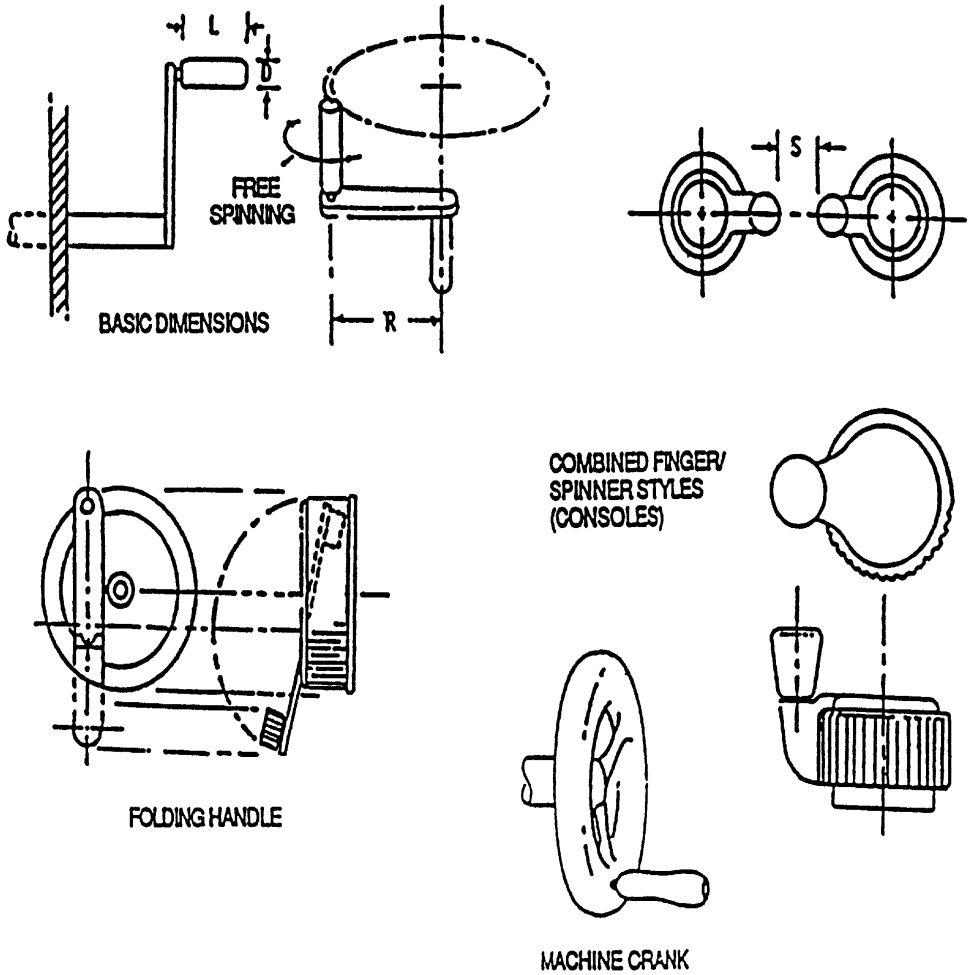

LOAD	DIMENSION	HANDLE		R, TURNING RADIUS	
		L, LENGTH	D, DIAMETER	RATE BELOW 100 RPM	RATE ABOVE 100 RPM
LIGHT LOADS <22 N (5 lb): Wrist & finger movement	MINIMUM	25 mm (1.0 in.)	10 mm (0.4 in.)	38 mm (1.5 in.)	13 mm (0.5 in.)
	PREFERRED	38 mm (1.5 in.)	13 mm (0.5 in.)	75 mm (3.0 in.)	65 mm (2.5 in.)
	MAXIMUM	75 mm (3.0 in.)	16 mm (0.625)	125 mm (5.0 in.)	115 mm (4.5 in.)
HEAVY LOADS >22 N (5 lb): Arm movement	MINIMUM	75 mm (3.0 in.)	25 mm (1.0 in.)	190 mm (7.5 in.)	125 mm (5.0 in.)
	PREFERRED	95 mm (3.75 in.)	25 mm (1.0 in.)	—	—
	MAXIMUM	—	38 mm (1.5 in.)	510 mm (20 in.)	230 mm (9.0 in.)

S, Separation between adjacent controls: 75 mm (3”), minimum.

FIGURE 11. **Cranks**

5.4.2.2.5.2 Turning aids. Knurling, indenting, high-friction covering, or a combination of these shall be built into the handwheel to facilitate operator grasp for applying maximum torque and to reduce the possibility of the wheel's being jerked from the operator's hands.

Downloaded from http://www.everyspec.com on 2010-01-26T2:50:27.

5.4.2.2.5.3 Spinner handles. For applications where the wheel may be rotated rapidly through several revolutions, a spinner handle may be added, except where it is vulnerable to inadvertent displacement of a critical wheel setting or if it creates a safety hazard.

5.4.2.2.5.4 Direction of movement. Except for valves (see 5.4.1.2.4), handwheels shall rotate clockwise for ON or INCREASE and counterclockwise for OFF or DECREASE. The direction of motion shall be indicated on the handwheel, or immediately adjacent thereto, by means of arrow and appropriate legends.

5.4.2.2.5.5 Dimensions, resistance, displacement and separation. Control dimensions, resistance, displacement and separation between edges of adjacent handwheels shall conform to the criteria in Table IX.

5.4.2.2.5.6 Steering wheel shape. All steering wheels shall be round, except for established uses in submarines, armored combat vehicles, aircraft, and other applications where maximum wheel deflection does not exceed 120°.

5.4.2.2.5.7 Power steering failure. Steering systems shall provide sufficient mechanical advantage to meet the force requirements of Table IX, even when the primary operating mode is power assisted, i.e., the operator shall be able to steer the vehicle to a safe stop if power fails.

5.4.2.2.5.8 Steering ratio. Maximum turning limits of vehicles shall be achieved with not more than 3.5 turns of the steering wheel if consistent with force limits of Table IX.

5.4.3 Linear controls.

5.4.3.1 Discrete linear controls.

5.4.3.1.1 Push buttons (finger or hand operated).

5.4.3.1.1.1 Use. Push buttons should be used when a control or an array of controls is needed for momentary contact or for actuating a locking circuit, particularly in high-frequency-of-use situations. Push buttons should not be used for discrete control where the functions status is determined exclusively by a position of the switch, e.g., an on-off push button that is pressed in and retained to turn a circuit on and pressed again to release the push button and turn the circuit off.

5.4.3.1.1.2 Shape. The push button surface should be concave (indented) to fit the finger. When this is impractical, the surface shall provide a high degree of frictional resistance. Large, hand- or fist-operated, mushroom shaped buttons should be used only as EMERGENCY STOP controls.

5.4.3.1.1.3 Positive indication. A positive indication of control activation shall be provided (e.g., snap feel, audible click, or integral light).

5.4.3.1.1.4 Channel or cover guard. A channel or cover guard shall be provided when accidental actuation of the control must be prevented. When a cover guard is in the open position, it shall not interfere with operation of the protected device or adjacent controls.

5.4.3.1.1.5 Dimensions, resistance, displacement, and separation. Except for use of push buttons in keyboards, control dimensions, resistance, displacement, and separation between adjacent edges of finger or hand-operated push buttons shall conform to the criteria in Figure 12.

5.4.3.1.1.6 Interlocks or barriers. Mechanical interlocks or barriers may be used instead of the spacing required by Figure 12.

TABLE IX. Handwheels

CONFIGURATION EXAMPLE	APPLICATION CRITERIA	DESIGN CRITERIA				
		DIMENSIONS			DISPLACEMENT	SEPARATION
		DIAMETER	RIM DIAM	MIN HAND CLEARANCE		
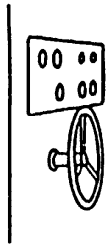	CONTINUOUS ADJUSTMENT FOR ALTERNATE SLEWING/PRECISE POSITIONING, USING DISPLAY REFERENCE. RESISTANCE LOW (e.g., BELOW 110 N (25 lb)	200-510 mm (8-20")	19-32 mm (0.75-1.125")	75 mm (3") around rim	See control/ display ratios 5.1.4	710 mm (28") elbow-elbow clearance
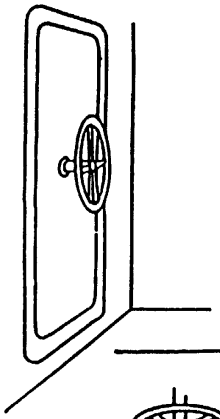	CONTINUOUS LOCK-UNLOCK OPERATION	200 mm (8") for 22 N (5 lb) to 510 mm (20") for 155 N (35 lb)	19-32 mm (0.75-1.125")	75 mm (3") around rim	N/A	710 mm (28") elbow-elbow clearance
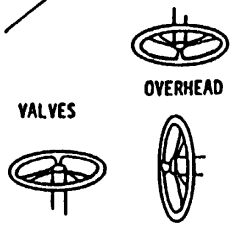	HIGH TORQUE VALVES	200-400 mm (8-16") for overhead; 200-510 mm (8-20") for other positions; 300-1520 mm (12-60") abv ;tanding surface	19-32 mm (0.75-1.125")	75 mm (3") around rim	See 5.1.4 when applicable	710 mm (28") elbow-elbow clearance 100 - 150 mm (4.0 - 6.0 in) overhead valve rim-to-rim clearance

Downloaded from http://www.everyspec.com on 2010-01-26T2:50:27.

Downloaded from http://www.everyspec.com on 2010-01-26T2:50:27.

TABLE IX. Handwheels (concluded)

CONFIGURATION EXAMPLE	APPLICATION CRITERIA	DESIGN CRITERIA				
		DIMENSIONS			DISPLACEMENT	SEPARATION
		D, DIAMETER	R_d, RIM DIAM	S, SLOPE		
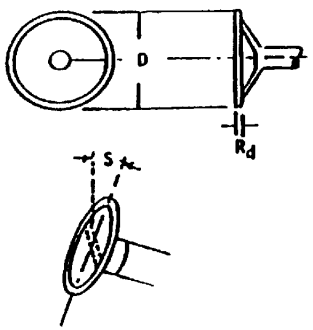	VEHICLES STEERING (AUTOMOTIVE) MAX RESISTANCE POWER STEERING MAX NON-POWER = 220 N (50 lb)	355-400 mm (14-16") for pwr steering 400-510 mm (16-20") for non-pwr steering	19-32 mm (0.75-1.125")	525 mrad (30°) for light vehicle (preferred) 785 mrad (45°) for heavy vehicle (preferred)	Max of ±2/3 π rad (120°) when both hands must remain on wheel	N/A
		D, GRIP DIAM	L, GRIP LGTH	X-Y GRIP TIL		
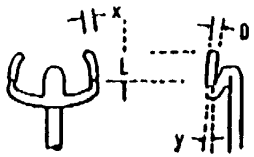	AIRCRAFT STEERING (COMBINE WITH LEVER FOR PITCH, RUDDER PEDALS FOR ROLL/STEER)	32 mm (1.125") preferred	100 mm (4") minimum	X = 262 mrad (15°) Y = 0-262 mrad (0-15°) preferred	±525 mrad (30°) max preferred	N/A

Downloaded from http://www.everyspec.com on 2010-01-26T2:50:27.

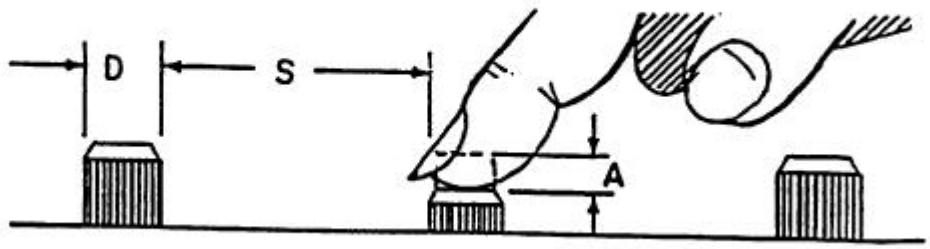

	DIMENSIONS (Diameter, D)						RESISTANCE		
	Fingertip		Thumb		Palm				
	Bare hand	Gloved hand	Bare hand	Gloved hand	Bare hand	Gloved hand	Single Finger	Different fingers[1]	Thumb/ Palm
MIN	10 mm (0.4”)	19 mm (0.75”)	19 mm (0.75”)	25 mm (1.0”)	40 mm (1.6”)	50 mm (2.0”)	2.8 N 10 oz	1.4 N (5 oz)	2.8 N (10 oz)
MAX	25 mm (1.0”)	—	25 mm (1.0”)	—	70 mm (2.8”)	—	11 .0 N (40 oz)	5.6 N (20 oz)	23.0 N (80 oz)

	DISPLACEMENT (A)	
	Fingertip	Thumb or Palm
MIN	2 mm (0.08”)	3 mm (0.12”)
MAX	6 mm (0.25”)	38 mm (1.5”)

	SEPARATION (S)				
	Single Finger		Single Finger Sequential	Different Fingers	Thumb or Palm
	Bare	Gloved			
MIN	13 mm (0.5”)	25 mm (1.0”)	6 mm (0.25”)	6 mm (0.25”)	25 mm (1.0”)
PREF	50 mm (2.0”)	—	13 mm (0.5”)	13 mm (0.5”)	150 mm (6.0 “)

[1]Actuated at same time

NOTE: Where gloved hand criteria are not provided, minima should be suitably adjusted.

FIGURE 12. **Push button (finger or hand operated)**

5.4.3.1.2 Foot- operated switches.

5.4.3.1.2.1 Use. Foot-operated switches should be used only where the operator is likely to have both hands occupied when switch actuation may be required, or when load sharing among limbs is desirable. Because foot-operated switches are susceptible to accidental actuation, their uses should be limited to non-critical or infrequent operations such as press-to-talk communication or vehicle headlight dimming.

5.4.3.1.2.2 Operation. Foot switches shall be positioned for operation by the toe and the ball of the foot rather than by the heel. They shall not be located so near an obstruction that the operator cannot center the ball of the foot on the switch button. A pedal may be used over the button to aid in

Downloaded from http://www.everyspec.com on 2010-01-26T2:50:27.

locating and operating the switch. If the switch may become wet and slippery, the switch cap surface should provide a high degree of frictional resistance.

5.4.3.1.2.3 Dimensions, resistance and displacement. Dimensions, resistance, and displacement of foot-operated switches shall conform to the criteria in Figure 13. While only one switch per foot is preferred, when one foot must be used to operate more than one switch, such switches shall be at least 75 mm (3 in) apart (horizontal); 200 mm (8 in) apart (vertical).

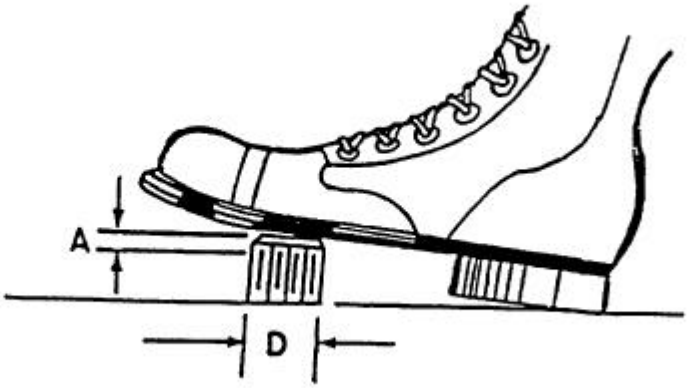

	DIAMETER	RESISTANCE		DISPLACEMENT			
	D			A			
		Foot Will Not Rest On Control	Foot Will Rest On Control	Normal Operation	Heavy Boot Operation	Ankle Flexion Only	Total Leg Movement
Minimum	13 mm (0.5 in.)	18 N (4 lb)	45 N (10 lb)	13 mm (0.5 in.)	25 mm (1 in.)	25 mm (1 in.)	25 mm (1 in.)
Maximum		90 N (20 lb)	90 N (20 lb)	65 mm (2.5 in.)	65 mm (2.5 in.)	65 mm (2.5 in.)	100 mm (4 in.)

FIGURE 13. **Foot-operated switches**

5.4.3.1.2.4 Feedback. A positive indication of control actuation shall be provided (e.g., snap feel, audible click, or associated visual or audio display).

5.4.3.1.3 Keyboards.

5.4.3.1.3.1 Use. Arrangements of push buttons in the form of keyboards should be used when alphabetic, numeric, or special function information is to be entered into a system.

5.4.3.1.3.2 Layout and configuration. Alphanumeric keyboards and numeric keypads should conform to ANSI/HFS-100.

5.4.3.1.3.3 Dimensions, resistance, displacement, and separation. Dimensions, resistance, displacement and separation between adjacent edges of the push buttons on keyboards shall conform to the criteria in Table X. For a given keyboard, these criteria shall be uniformly met for all individual keys.

Downloaded from http://www.everyspec.com on 2010-01-26T2:50:27.

TABLE X. **Keyboards**

	DIMENSIONS		RESISTANCE		
	Diameter (D)[1]				
	Bare hand	Arctic mittens[2]	Numeric	Alpha-numeric	Dual Function
Minimum	10 mm (0.4”)	19 mm (0.75”)	1 N (3.5 oz)	0.25 N (0.9 oz)	0.25 N (0.9 oz)
Preferred	13 mm (0.5”)	19 mm (0.75”)	-	0.5 - 0.6 N (1.8-2.2 oz)	-
Maximum	19 mm (0.75”)	-	4 N (14.0 oz)	1.5 N (5.3 oz)	1.5 N (5.3 oz)

	DISPLACEMENT[3]			SEPARATION
	Numeric	Alpha-numeric	Dual Function	(between adjacent key tops)
Minimum	0.8 mm (0.03”)	1.3 mm (0.05”)	0.8 mm (0.03”)	6.4 mm (0.25”)
Preferred	-	-	-	6.4 mm (0.25”)
Maximum	4.8 mm (0.19”)	6.3 mm 0.25 in	4.8 mm (0.19”)	-

	VEHICLE APPLICATIONS			
	DIMENSIONS		RESISTANCE	SEPARATION
	Bare hand	Gloved hand	Numeric Input	
Minimum	10 mm (0.4”)	19 mm (0.75”)	2.8 N (9.9 oz)	-
Preferred	-	-	-	13 mm (0.5”)
Maximum	25 mm (1.0”)	25 mm (1.0”)	6.7 N (23.7 oz)	-

[1]See Figure 12
[2]Trigger finger type; other parameters are unchanged from those of bare-handed operation.
[3] For membrane keys, preferred displacement is 0.7 mm (0.03) and resistance should be not less than 2 N (7.2 oz). Membrane keys should also incorporate positive tactile feedback (e.g., “snap” action).

5.4.3.1.3.4 Slope. The slope of nonportable keyboards should be 0-25° above the horizontal. The preferred slope is 0-15°. The slope of a portable device should be capable of being varied according to the preference of the operator.

5.4.3.1.3.5 Multiple keyboards. Systems that include more than one keyboard shall maintain the same configuration for alphanumeric, numeric, and special function keys throughout the system.

5.4.3.1.3.6 Feedback. Where applicable, feedback shall be provided to inform the operator that the intended key was pressed and that the next operation may be initiated.

Downloaded from http://www.everyspec.com on 2010-01-26T2:50:27.

5.4.3.1.4 Toggle switch controls.

5.4.3.1.4.1 Use. Toggle switches should be used where two discrete control positions are required or where space limitations are severe. Toggle switches with three positions shall be used only where the use of a rotary control or legend switch control is not feasible or when the toggle switch is spring-loaded to a center-off position. Three position toggle switches, spring-loaded to center-off from only one other position, shall not be used if release from the spring-loaded position results in switch handle travel beyond the off position. (Toggle switches are discrete position controls. For small controls that are the same size and shape as toggle switches, but used for making continuous adjustments, see levers.)

5.4.3.1.4.2 Accidental actuation. When preventing accidental actuation is important (i.e., critical or hazardous conditions would result), channel guards, lift-to-unlock switches, or other equivalent prevention mechanisms shall be provided. Safety or lock wire shall not be used. Resistance of lift-to-unlock mechanisms shall not exceed 13 N (3 lb). An open cover guard shall not interfere with the operation of the protected device or adjacent controls.

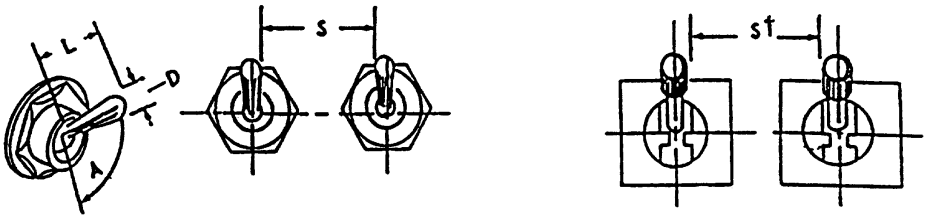

	DIMENSIONS			RESISTANCE	
	L Arm Length		D Control Tip	Small Switch	Large Switch
	Use by bare finger	Use with heavy handwear			
Minimum	13 mm (0.5”)	38 mm (1.5”)	3 mm (0.125”)	2.8 N (10 oz)	2.8 N (10 oz)
Maximum	50 mm (2.0”)	50 mm (2.0”)	25 mm (1.0”)	4.5 N (16 oz)	11 N (40 oz)

	DISPLACEMENT BETWEEN POSITIONS	
	Two Position	Three Position
Minimum	30°	17°
Maximum	80°	40°
Preferred	---	25°

	SEPARATION, S			
	Single Finger Operation		Single Finger Sequential Operation	Simultaneous Operation by Different Fingers
	Normal	Lever Lock Switch		
Minimum	19 mm (0.75”)	25 mm (1.0”)	13 mm (0.5”)	16 mm (0.625”)
Optimum	50 mm (2.0”)	50 mm (2.0”)	25 mm (1.0”)	19 mm (0.75”)

FIGURE 14. **Toggle switches**

5.4.3.1.4.3 Dimensions, resistance, displacement, and separation. Dimensions, resistance, displacement, and separation between adjacent edges of toggle switches shall conform to the criteria in Figure 14. Resistance should gradually increase, then drop when the switch snaps into position. The switch shall not be capable of being stopped between positions.

Downloaded from http://www.everyspec.com on 2010-01-26T2:50:27.

5.4.3.1.4.4 Positive indication. An indication of control actuation shall be provided (e.g., snap feel, audible click, or associated or integral light).

5.4.3.1.4.5 Orientation. Toggle switches should be vertically oriented with OFF in the down position. Horizontal orientation and actuation of toggle switches shall be used only for compatibility with the controlled function or equipment location.

5.4.3.1.5 Legend switches.

5.4.3.1.5.1 Dimensions, resistance, displacement, and separation. Dimensions, resistance, displacement, and separation between adjacent edges of legend switches shall conform to the criteria in Figure 15, except that maximum switch separation does not apply to non-matrix applications.

5.4.3.1.5.2 Barrier height. Barrier height from panel surface shall conform to the criteria in Figure 15. Unless otherwise specified, barriers are required on critical switches and on switches likely to be inadvertently actuated. Barriers, when used, shall not obscure visual access to controls, labels or displays, and shall have rounded edges.

5.4.3.1.5.3 Other requirements.

a. The legend switch shall be provided with a detent or click for positive indication of switch actuation. When touch sensitive switches are used, a positive indication of actuation shall be provided, e.g., an integral light within or above the switch being actuated.

b. The legend shall be legible with or without internal illumination.

c. A lamp test or dual lamp/filament reliability shall be provided for switches if the mean time between failure is less than 100,000 hrs.

d. Lamps within the legend switch shall be replaceable from the front of the panel by hand and the legends or covers shall be keyed to prevent the possibility of interchanging the legend covers.

e. A legend plate shall not contain more than three lines of lettering.

f. Legend switches should be distinguishable from legend lights.

5.4.3.1.6 Rocker switches.

5.4.3.1.6.1 Use. Rocker switches may be used in lieu of toggle switches for functions requiring two discrete positions. They may be used for applications where toggle switch handle protrusions might snag the operator's sleeve or phone cord, or where there is insufficient panel space for separate labeling of switch positions. Rocker switches with three positions shall be used only where the use of a rotary control, or legend switch control is not feasible or when the rocker switch is of the spring-loaded center-off type.

5.4.3.1.6.2 Accidental actuation. When accidental actuation must be prevented to avoid critical or hazardous conditions, channel guards or equivalent protection shall be provided.

5.4.3.1.6.3 Positive indication. An indication of control actuation shall be provided (e.g., snap feel, audible click, associated or integral light).

Downloaded from http://www.everyspec.com on 2010-01-26T2:50:27.

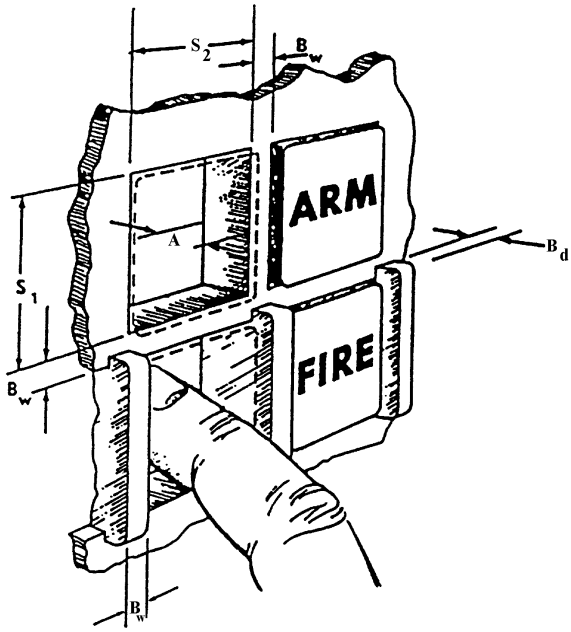

	SIZE (S_1 AND S_2)		BARRIERS	
	Bare Hand	Gloved Hand	Width (Bw)[2]	Depth (Bd)
MINIMUM	19 mm (0.75”)[1]	25 mm (1.0”)	3 mm (0.125”)	5 mm (0.2”)
MAXIMUM	-	38 mm (1.5”)	-	-

	DISPLACEMENT		
		Membrane/Tactile Legend Switch	
	Standard Legend Switch	Dome snap-action contact	Conductive membrane contact
MINIMUM	3 mm (0.125”)	7 mm (0.03”)	5 mm (0.2”)
MAXIMUM	6 mm (0.25”)	1 mm (0.04”)	1 mm (0.04”)

	RESISTANCE		
		Membrane/Tactile Legend Switch	
	Standard Legend Switch	Dome snap-action contact	Conductive membrane contact
MINIMUM	2.8 N (10 oz)[4]	1.5 N (5 oz)	2.0 N (7 oz)
MAXIMUM	16.7 N (60 oz)	2.5 N (9 oz)	3.0 N (11 oz)

[1]15 mm (0.65”) where switch is not depressed below the panel.
[2]Bw also refers to switch separation.
[3]5 mm (0.2”) for positive switches.
[4]5.6 N (20 oz) for use in moving vehicles.

FIGURE 15. **Legend switch**

Downloaded from http://www.everyspec.com on 2010-01-26T2:50:27.

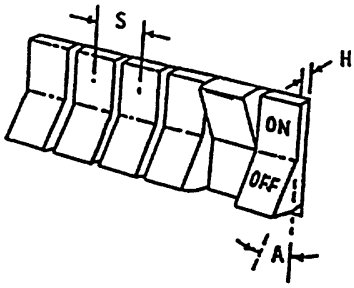

STANDARD ROCKER SWITCH: USE AS ALTERNATE TWO-POSN TOGGLE SWITCH TO PROVIDE LABELING SURFACE, EASE OF COLOR CODING, SWITCH ILLUMINATION.

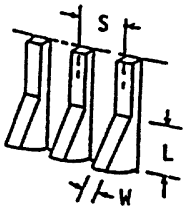

NARROW WIDTH, ESPECIALLY DESIRABLE FOR TACTILE DEFINITION WITH GLOVES.

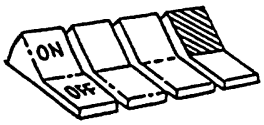

ALTERNATE (CONTRAST) COLOR FOR ON VERSUS OFF TO PROVIDE CONSPICUOUS CUE. OF SWITCH POSITION. ILLUMINATED "ON" DESIRABLE AS SECOND FEEDBACK CUE.

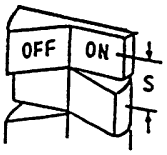

	DIMENSIONS		RESISTANCE
	W, WIDTH	L, LENGTH	
MINIMUM	6 mm (0.25”)	13 mm (0.5”)	2.8 N (10 oz.)
MAXIMUM			11 N (40 oz.)

	DISPLACEMENT		SEPARATION (Center-to-Center)	
	H, DEPRESSED	A, ANGLE	S (Bare Hand)	S (Gloved Hand)
MINIMUM	3 mm (0.125”)	530 mrad (30º)	19 mm (0.75”)	32 mm (1.125”)

FIGURE 16. **Rocker switches**

Downloaded from http://www.everyspec.com on 2010-01-26T2:50:27.

5.4.3.1.6.4 Dimensions, resistance, displacement and separation. Dimensions, resistance, displacement and separation between centers of rocker switches shall conform to the criteria in Figure 16. Resistance should gradually increase, then drop when the switch snaps into position. The switch shall not be capable of being stopped between positions.

5.4.3.1.6.5 Orientation. Where practicable, rocker switches shall be vertically oriented. Actuation of the upper wing shall turn the equipment or component on, cause the quantity to increase, or cause the equipment of component to move forward, clockwise, to the right or up. Horizontal orientation of rocker switches shall be employed only for compatibility with the controlled function or equipment location.

5.4.3.1.6.6 Color and illumination. Alternate colors may be used to denote the ON and OFF portions of a rocker switch. Alternate illumination of either the ON or OFF switch position may be used to facilitate positive recognition of current switch position. For other color coding, see 5.2.2.1.13. Where ambient illumination will provide display luminance below 3.5 cd/m^2 (1 Ft-L), the rocker switch should be internally illuminated. Digits and letters shall appear as illuminated characters on an opaque background and their dimensions should approximate the following: height: 4.8 mm (3/16"); height-to-width ratio: 3:2; height-to-stroke-width ratio: 10:1

5.4.3.1.7 Slide switch controls.

5.4.3.1.7.1 Use. Slide switch controls may be used for functions which require two discrete positions. Slide switch controls may also be used for functions which require a higher number of discrete positions in which the switches are arranged in a matrix to permit easy recognition of relative switch settings (e.g., audio settings across frequencies), but shall not be used where mispositioning is to be avoided.

5.4.3.1.7.2 Accidental actuation. See 5.4.3.1.6.2.

5.4.3.1.7.3 Dimensions, resistance, and separation. Dimensions, resistance and separation of slide switch handles shall conform to criteria in Figure 17. Detents shall be provided for each control setting. Resistance should gradually increase, then drop when the switch snaps into position. The switch shall not be capable of stopping between positions.

5.4.3.1.7.4 Orientation. Slide switches should be vertically oriented with movement of the slide up or away from the operator turning the equipment or component on, causing a quantity to increase, or causing the equipment or component to move forward, clockwise, to the right or up. Horizontally oriented or actuated slide switches shall be used only for compatibility with the controlled function or equipment location.

5.4.3.1.7.5 Positive indication. Slide switches with more than two positions shall provide positive indication of control setting, preferably a pointer located on the left side of the slide handle.

5.4.3.1.8 Discrete push-pull controls.

5.4.3.1.8.1 Applications. Push-pull controls may be used when two discrete functions are to be selected. However such applications should be used sparingly and for applications in which such configurations are typically expected. They may also be used in certain cases where limited panel space suggests a miniaturized knob that may be used to serve two related, but distinct functions (e.g., an ON-OFF/Volume switch for a TV monitor). A three-position push-pull control may be used only where inadvertently selecting the wrong position has no serious consequences (e.g., older vehicle headlight controls--Off/Park/Headlight-with integrated rotary panel light and dome light switches).

Downloaded from http://www.everyspec.com on 2010-01-26T2:50:27.

5.4.3.1.8.2 Handle dimensions, displacement and clearances. Push-pull control handles shall conform to criteria in Table XI.

5.4.3.1.8.3 Rotation. Except for combination push-pull/rotate switch configurations (e.g., the handle is rotated to disengage the brake setting), push-pull control handles shall be keyed to a non-rotating shaft. When the control system provides a combination push-pull/rotate functional operation, using a round style knob, the rim of the knob shall be serrated to denote (visually and tactually) that the knob can be rotated, and to facilitate a slip-free finger grip.

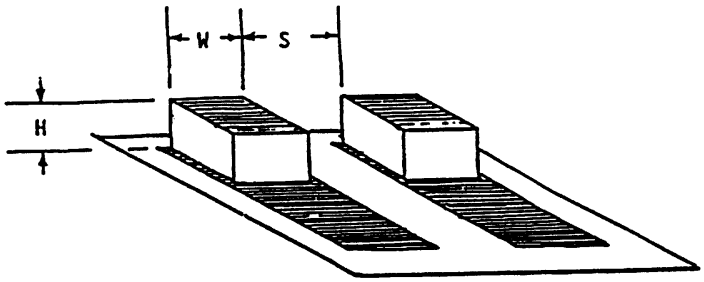

	DIMENSIONS			RESISTANCE	
	H ACTUATOR HEIGHT *	H ACTUATOR HEIGHT **	W ACTUATOR WIDTH	SMALL SWITCH	LARGE SWITCH
MINIMUM	6 mm (0.25”)	13 mm (0.5”)	6 mm (0.25”)	2.8 N (10 oz)	2.8 N (10 oz.)
MAXIMUM	--	--	25 mm (1”)	4.5 N (16 oz.)	11 N (40 oz.)

	SEPARATION, S		
	SINGLE FINGER OPERATION	SINGLE FINGER SEQUENTIAL OPERATION	SIMULTANEOUS OPERATION BY DIFFERENT FINGERS
MINIMUM	19 mm (0.75”)	13 mm (0.5”)	16 mm (0.625”)
OPTIMUM	50 mm (2”)	25 mm (1”)	19mm (0.75”)

*Use by bare finger.

** Use with heavy handwear.

FIGURE 17. **Slide switches**

5.4.3.1.8.4 Detents. Mechanical detents shall be incorporated into push-pull controls to provide tactile indication of positions.

5.4.3.1.8.5 Snagging and inadvertent contact. Use, location, and operating axis of push-pull type controls shall preclude the possibility of the operator's:

a. bumping a control while getting into or out of position (as in a vehicle),

TABLE XI. Push-pull controls

CONFIGURATION EXAMPLE	APPLICATION CRITERIA	DESIGN CRITERIA				
		DIMENSIONS			DISPLACEMENT	SEPARATION
	PUSH-PULL CONTROL, LOW RESISTANCE, FOR TWO-POSITION, MECHANICAL AND/OR ELECTRICAL SYSTEMS. ALTERNATE THREE POSITION PLUS ROTARY FUNCTION ACCEPTANCE FOR APPLICATION SUCH AS VEHICLE HEADLIGHT PLUS PARKING LIGHTS, PANEL AND DOME LIGHTS PROVIDE SERRATED RIM.	D, MIN DIAM: 19 mm (0.75”)	C, MIN CLEARANCE: 25 mm (1”) Add 13 mm (0.5”) for gloved hand		25 ±13 mm (1 ±0.5”) MIN BETWEEN PULL POSNS: 13 mm (0.5”)	S, MIN SPACE BETWEEN: 35 mm (1.5”) Add 13 mm (0.5”) for gloved hand
	ALTERNATE HANDLE; MINIATURE ELECTRICAL PANEL SWITCH ONLY. AVOID GLOVE USE APPLICATION.	D, MIN DIAM: 6 mm (0.25”)	N/A	L, MIN LGTH: 19 mm (0.75”)	MINIMUM: 13 mm (0.5”)	S, MIN SPACE BETWEEN: 25 mm (1”)
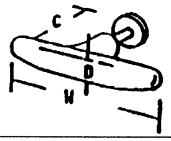	IGH-FORCE PUSH-PULL, FOR TWO-POSITION MECHANICAL SYSTEM ONLY.	W, MIN WIDTH: 100 mm (4”)	D, DEPTH: 16-38 mm (0.625-1.5”)	C, MIN CLEARANCE: 38 mm (1.5”) Add 6 mm (0.25”) for gloved hand	MINIMUM: 25 mm (1”) PREFERRED: 50 mm (2”)	
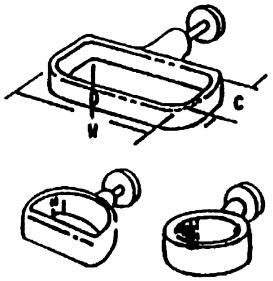	SAME AS ABOVE. PREFERRED WHERE POSSIBLE GARMENT OR CABLE-SNAG POSSIBILITY EXISTS. NOTE: 1 & 2 FINGER PULLS ALSO ACCEPTABLE FOR LESS THAN 18 N (4lb) APPLICATIONS.	W, MIN WIDTH: 100 mm (4”) Add 25 mm (1”) for gloves	D, DEPTH: 16-32 mm (0.625-1.25”)	C, MIN CLEARANCE: 32 mm (1.25”)	MINIMUM: 25 mm (1”) PREFERRED: 50 mm (2”)	S, MIN SPACE BETWEEN: 13 mm (0.5”)

Downloaded from http://www.everyspec.com on 2010-01-26T2:50:27.

Downloaded from http://www.everyspec.com on 2010-01-26T2:50:27.

b. snagging clothing, communication cables, or other equipment items on the control, or

c. inadvertently deactuating the control setting while reaching for another control.

5.4.3.1.8.6 Direction of control motion. Control direction shall be as follows:

a. Pull towards the operator for ON or activate; push away for OFF or deactivate.

b. Rotate clockwise to activate or increase a function of combination pull/rotary switches.

5.4.3.1.8.7 Resistance. Force for pulling a panel control with fingers should be not more than 18 N (4 lb); force for pulling a T-bar with four fingers should be not more than 45 N (10 lb).

5.4.3.1.9 Printed circuit (PC) switch controls.

5.4.3.1.9.1 Use. PC "DIP" type switches or hand-selected jumpers shall be installed only for settings that require infrequent changes.

5.4.3.1.9.2 Dimensions, resistance, displacement and separation. Dimensions, resistance, displacement and separation between adjacent PC switch actuators shall conform to the following:

a. Actuators shall be sufficiently large to permit error-free manipulation by the operator when using commonly available styluses (e.g., pencil or pen). The actuators shall not require the use of a special tool for manipulation.

b. Resistance shall be sufficiently high to avoid inadvertent actuation under expected use conditions. Resistance should gradually increase, then drop when the actuator snaps into position. The actuator shall not be capable of stopping between positions.

c. Slide-type actuators shall have sufficient travel (displacement) to permit immediate recognition of the switch setting. The travel should be not less than twice the actuator length. When actuators are rocker-type, the actuated wing shall be flush with the surface of the module.

d. Actuators shall have sufficient separation to permit error-free manipulation by the operator (i.e., the stylus cannot inadvertently contact adjacent actuators).

5.4.3.1.9.3 Shape. The surface of the actuator shall be indented to accept the point of the stylus. The indentation shall be sufficiently deep to avoid slippage of the stylus during manipulation.

5.4.3.2 Continuous adjustment linear controls.

5.4.3.2.1 Levers.

5.4.3.2.1.1 Use. Levers may be used when high forces or large displacement are involved or when multidimensional movements of controls are required.

5.4.3.2.1.2 Coding. When several levers are grouped near each other, the lever handles shall be coded.

5.4.3.2.1.3 Labeling. When practicable, all levers shall be labeled as to function and direction of motion.

Downloaded from http://www.everyspec.com on 2010-01-26T2:50:27.

5.4.3.2.1.4 Limb support. When levers are used to make fine or continuous adjustments, support shall be provided for the appropriate limb segment as follows:

a. For large hand movements: elbow

b. For small hand movements: forearm

c. For finger movements: wrist.

5.4.3.2.1.5 Dimensions. The length of levers shall be determined by the mechanical advantage needed. The diameter of spherical lever or grip handles shall conform to the criteria in Figure 18.

5.4.3.2.1.6 Resistance. Lever resistance shall be within the limits indicated in Figure 18, measured as linear force applied to a point on the handle. (NOTE: The right hand can supply slightly more force than the left, but the difference is not significant. The same amount of push-pull force can be applied when the control is along the median plane of the body as when it is directly in front of the arm, 180 mm (7 in) from the median plane. When the control is in front of the opposite

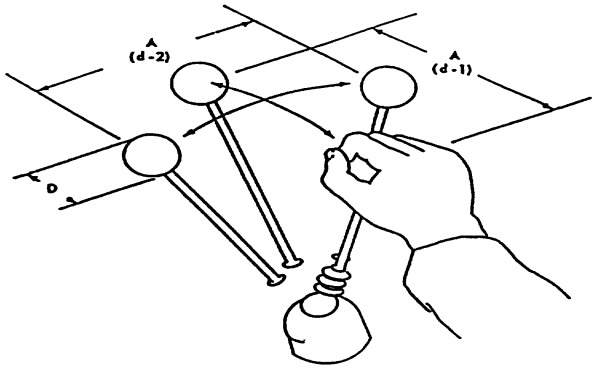

	DIAMETER		RESISTANCE			
	D		(d-1)		(d-2)	
	Finger Grasp	Hand Grasp	One Hand	Two Hands	One Hand	Two Hands
Minimum	13 mm (0.5 in.)	38 mm (1.5 in.)	9 N (2 lb)	9 N (2 lb)	9 N (2 lb)	9 N (2 lb)
Maximum	38 mm (1.5 in.)	75 mm (3 in.)	135 N (30 lb)	220 N (50 lb)	90 N (20 lb)	135 N (30 lb)

	DISPLACEMENT		SEPARATION	
	A			
	Forward (d-1)	Lateral (d-2)	One Hand Random	Two Hands Simultaneously
Minimum	-	-	50 mm (2 in.)	75 mm (3 in.)
Preferred			100 mm (4 in.)	125 mm (5 in.)
Maximum	360 mm (14 in.)	970 mm (38 in.)		

FIGURE 18. **Lever**

Downloaded from http://www.everyspec.com on 2010-01-26T2:50:27.

(unused) arm only 75 percent as much force can be applied. When the control is 250 - 480 mm (10 - 19 in) forward of the neutral seat reference point, twice as much push-pull force can be applied with two hands as with one-hand. Outside this range two-hand operation becomes less effective.)

5.4.3.2.1.7 Displacement and separation. Control displacement (for the seated operator) and separation shall conform to the criteria in Figure 18.

5.4.3.2.2 Displacement (isotonic) joysticks. Joysticks may be used when the task requires precise or continuous control in two or more related dimensions. When positioning accuracy is more critical than positioning speed, displacement joysticks (where resistance to movement increases with the distance the user displaces it from the center (null) position) should be selected over isometric joysticks (see 5.4.3.2.3). Displacement joysticks may also be used for various display functions such as selecting data from a CRT and generation of free-drawn graphics. In rate control applications, which allow the follower (cursor or tracking symbol) to transit beyond the edge of the display, indicators shall be provided to aid the operator in bringing the follower back onto the display. Displacement joysticks used for rate control should be spring-loaded for return to the center when the hand is removed. Displacement joysticks that have a deadband near the center or hysteresis shall not be used with automatic sequencing of a CRT follower (cursor or tracking symbol) unless they are instrumented for null return or zero-set to the instantaneous position of the stick at the time of sequencing. Upon termination of the automatic sequencing routine, the joystick center shall again be registered to scope center. (Displacement joysticks usually require less force than isometric joysticks and are less fatiguing for long operating periods.)

5.4.3.2.2.1 Hand operated displacement joysticks

5.4.3.2.2.1.1 Specific Use. In addition to general use, hand operated displacement joysticks may be used to control vehicles and aim sensors. Such joysticks may be used as mounting platforms for secondary controls, such as thumb and finger operated switches. (Operation of secondary controls has less induced error on a displacement hand grip than on an isometric handgrip.) When buttons are located on hand-operated joysticks, they should be operable using a normal grip without diminishing control of the joystick.

5.4.3.2.2.1.2 Dynamic characteristics. Movement shall not exceed 45° from the center position and shall be smooth in all directions. Positioning of a follower shall be attainable without noticeable backlash, cross-coupling, or need for multiple corrective movements. Control ratios, friction, and inertia shall meet the dual requirements of rapid gross positioning and precise fine positioning. When a joystick is used for generating free-drawn graphics, the CRT refresh rate shall be sufficiently high to display the follower as a continuous track. Delay between control movement and the confirming display response shall be minimized and shall be not greater than 0.1 second.

5.4.3.2.2.1.3 Dimensions and clearance. The hand grip length should be 110 - 180 mm (4.3 - 7.1 in). The grip diameter shall be not more than 50 mm (2 in). Clearances of 100 mm (4 in) to the side and 50 mm (2 in) to the rear shall be provided to allow for hand movement. Joysticks shall be mounted to provide forearm support. Modular devices shall be mounted to allow actuation of the joystick without slippage, movement, or tilting of the mounting base.

5.4.3.2.2.2 Finger operated displacement joysticks

5.4.3.2.2.2.1 Specific use. In addition to general uses, finger operated displacement joysticks are useful for free-drawn graphics. In this application, there is usually no spring return to center, and the resistance should be sufficient to maintain the handle position when the hand is removed.

5.4.3.2.2.2.2 Dynamic characteristics. Dynamic characteristics shall conform to 5.4.3.2.2.1.2. Recessed mounting may be utilized as indicated in Figure 19, to allow more precise control.

Downloaded from http://www.everyspec.com on 2010-01-26T2:50:27.

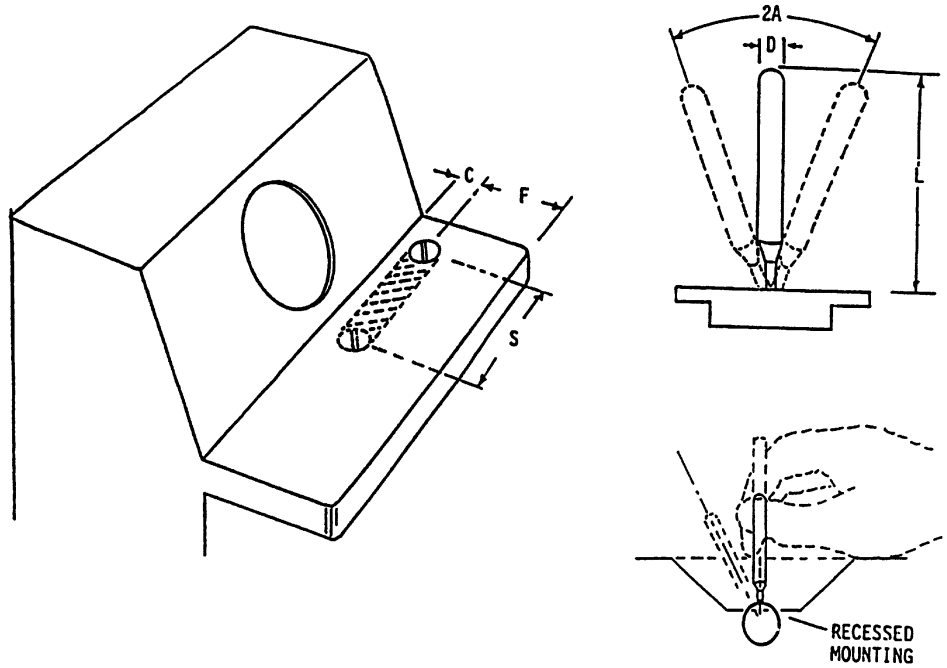

	DIMENSIONS		RESISTANCE	DISPLACEMENT	CLEARANCE		
	D DIAM	L LENGTH		A	S DISPLAY CL TO STICK CL	C AROUND STICK	F STICK CL. TO SHELF FRONT
MINIMUM	6.5 mm (0.25”)	75 mm (3”)	3.3 N (12 oz.)		0	*	120 mm (4.75”)
MAXIMUM	16 mm (0.625”)	150 mm (6”)	8.9 N (32 oz.)	$\frac{\pi}{4}$ rad (45°)	400 mm (15.75”)		250 mm (10”)

*Maximum stick excursion plus 100 mm (4”).

FIGURE 19. **Isotonic joysticks**

5.4.3.2.2.2.3 Dimensions, resistance, and clearance. The joystick should be mounted on a desk or shelf surface as shown in Figure 19. Joysticks shall be mounted to provide forearm or wrist support. Modular devices shall be mounted to allow actuation of the joystick without slippage, movement, or tilting of the mounting base.

Downloaded from http://www.everyspec.com on 2010-01-26T2:50:27.

5.4.3.2.2.3 Thumbtip/fingertip operated displacement joysticks.

5.4.3.2.2.3.1 Specific use. Thumbtip/fingertip operated joysticks may be mounted on a hand grip, which serves as a steady rest to damp vibrations and increase precision. If so mounted, the hand grip shall not simultaneously function as a joystick controller.

5.4.3.2.2.3.2 Dynamic characteristics. Movement shall not exceed 45° from the center position.

5.4.3.2.2.3.3 Dimensions, resistance, and clearance. Joysticks shall be mounted to provide wrist or hand support. Console mounted devices shall be mounted as shown in Figure 18. Modular devices shall be mounted to allow actuation of the joystick without slippage, movement, or tilting of the mounting base.

5.4.3.2.3 Isometric joystick (two axis controllers). (Also known as stiff stick, force stick, or pressure stick. The control has no perceptible movement, but its output is a function of the force applied.) Isometric joysticks may be used for tasks requiring precise or continuous control in two or more related dimensions and are particularly appropriate for applications: (1) which require precise return to center after each use, (2) in which operator feedback is primarily visual rather than tactile feedback from the control itself, and (3) where there is minimal delay and tight coupling between control and input and system reaction. Isometric sticks should not be used in applications that require the operator to maintain a constant force on the control for a long period of time or that provide no definitive feedback when maximum control inputs have been exceeded. When positioning speed is more critical than positioning accuracy, isometric joysticks should be selected over displacement joysticks. Isometric joysticks may also be used for various display functions such as data pickoff from a CRT. In rate control applications, which may allow the follower (cursor or tracking symbol) to transit beyond the edge of the display, indicators shall be provided in order to aid the operator in bringing the follower back onto the display.

5.4.3.2.3.1 Hand-operated.

5.4.3.2.3.1.1 Specific Use. In addition to general use, hand-operated isometric joysticks may be used as vehicle controllers, aiming sensors, and mounting platforms for secondary controls, such as thumb- and finger-operated switches. (Operation of secondary controls has greater induced error on the isometric hand grip than does displacement hand grip joysticks.)

5.4.3.2.3.1.2 Dynamic characteristics. Maximum force for full output shall be not more than 118 N (26.7 lb).

5.4.3.2.3.1.3 Dimensions, resistance, and clearance. Dimensions, resistance, and clearance shall conform to 5.4.3.2.2.1.3.

5.4.3.2.3.2 Finger operated. Dimensions, resistance, and clearance shall conform to 5.4.3.2.2.2.3.

5.4.3.2.3.3 Thumbtip/fingertip operated.

5.4.3.2.3.3.1 Specific use. Thumbtip/fingertip operated joysticks may be mounted on a hand grip, which serves as a steady rest to damp vibrations or increase precision. If so mounted, the hand grip shall not simultaneously function as a joystick controller.

5.4.3.2.3.3.2 Dimensions, resistance and clearance. Dimensions, resistance, and clearance shall conform to 5.4.3.2.2.3.3.

5.4.3.2.4 Ball control (Also known as track ball, ball tracker, joyball, and rolling ball.)

Downloaded from http://www.everyspec.com on 2010-01-26T2:50:27.

5.4.3.2.4.1 Use. A ball control suspended on low-friction bearings may be used for various control functions such as selection of data on a display. The ball control cannot provide an automatic return to point of origin, hence if used in applications requiring automatic return to origin following an entry or readout, the interfacing system must provide this. Because the ball can be rotated without limit in any direction it is well suited for applications where there may be accumulative travel in a given direction. If an application allows the ball to drive the follower on the display off the edge of the display, indicators shall be provided to advise the operator how to bring the follower back onto the display. Ball controls should be used only as position controls (i.e., a given movement of a ball makes a proportional movement of the follower on the display).

5.4.3.2.4.2 Dynamic characteristics. The ball control shall be capable of rotation in any direction so as to generate any combination of x and y output values. When moved in either the x or y directions alone there shall be no apparent cross-coupling (follower movement in the orthogonal direction). While manipulating the control, neither backlash nor cross-coupling shall be apparent to the operator. Control ratios and dynamic features shall meet the dual requirement of rapid gross positioning and smooth, precise fine positioning.

5.4.3.2.4.3 Limb support. When trackball controls are used to make precise or continuous adjustments, wrist support or arm support or both shall be provided. (See 5.4.3.2.1.4.)

5.4.3.2.4.4 Dimensions, resistance and clearance. Dimensions, resistance, and clearances should conform to the criteria in Figure 20. The smaller diameter ball controls should be used where space availability is very limited and when there is no need for precision. Permanent mounting, if used, should be as shown in Figure 20.

5.4.3.2.5 Grid-and-stylus devices. The following provisions cover techniques that use a means of establishing an x and y grid and a stylus for designating specific points on that grid for control purposes. (For dimensions and mounting, see 5.4.3.2.7.3).

5.4.3.2.5.1 Application. Grid and stylus devices may be used to select data from a CRT, enter points on a display, generate free-drawn graphics, and similar control applications. The grid may be on a transparent medium allowing stylus placement directly over corresponding points on the display or it may be displaced from the display in a convenient position for stylus manipulation. In either case a follower (bug, mark, hook) shall be presented on the display at the coordinate values selected by the stylus. Feedback (e.g., a click) shall be provided for control actions. Devices of this type should be used only for zero order control functions (i.e., displacement of the stylus from the reference position causes a proportional displacement of the follower).

5.4.3.2.5.2 Dynamic characteristics. Movement of the stylus in any direction on the grid surface shall result in smooth movement of the follower in the same direction. Discrete placement of the stylus at any point on the grid shall cause the follower to appear at the corresponding coordinates and to remain there as long as the stylus is not moved. Refresh rate for the follower shall be sufficiently high to ensure the appearance of a continuous track whenever the stylus is used for generation of free-drawn graphics.

5.4.3.2.5.3 Dimensions and mounting. Transparent grids which are used as display overlays shall conform to the size of the display. Grids which are displaced from the display should approximate the display size and should be mounted below the display in an orientation to preserve directional relationships to the maximum extent (i.e., vertical plane passing through the north/south axis on the grid shall pass through or be parallel to the north/south axis of the display).

Downloaded from http://www.everyspec.com on 2010-01-26T2:50:27.

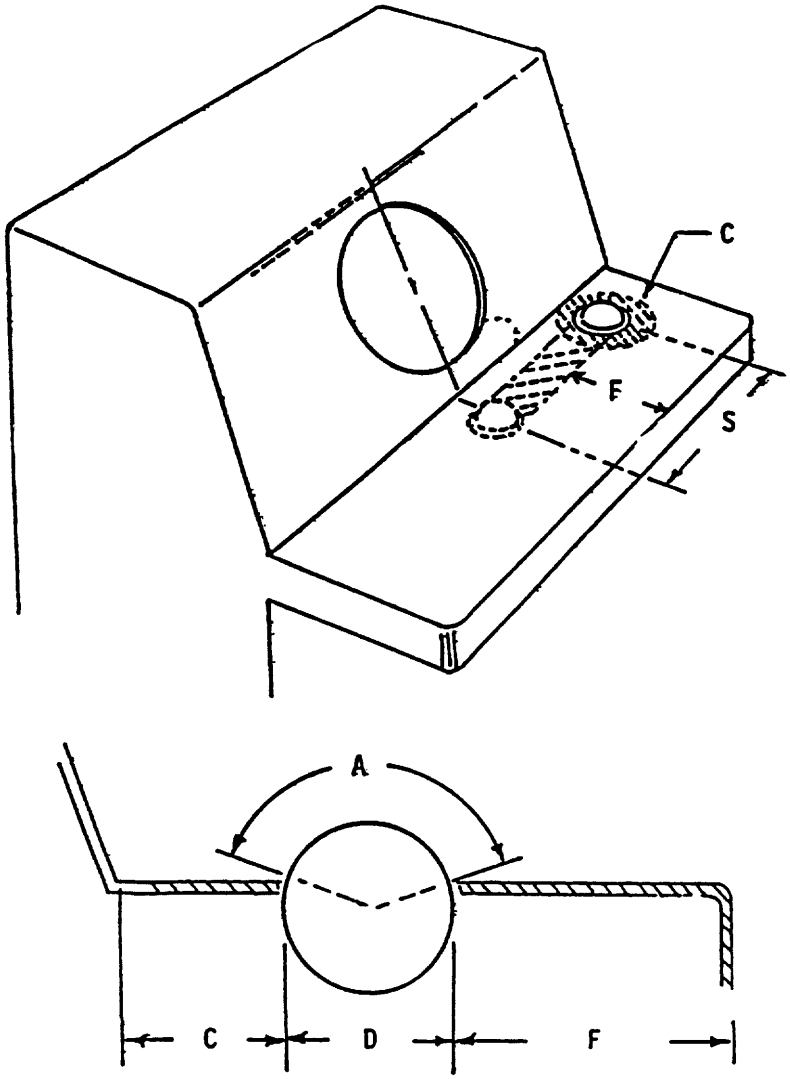

	DIMENSIONS		RESISTANCE		CLEARANCE		
	D DIAM	A SURFACE EXPOSURE	PRECISION REQUIRED	VIBRATION OR ACCEL CONDITIONS	S DISPLAY CL TO BALL CL	C AROUND BALL	F BALL TO SHELF FRONT
MINIMUM	50 mm (2.0”)	100°	0.25 N (0.9 oz)	—	0	50 mm (2.0”)	120 mm (4.75”)
PREFERRED	100 mm (4.0”)	120°	0.3 N (1.1 oz)	—	—	—	—
MAXIMUM	150 mm (6.0”)	140°	1.5 N (5.4 oz)	1.7 N (6.0 oz)	320 mm (12.6”)	—	250 mm (10”)

NOTE: Initial resistance should range from 0.25 N(0.9 oz) to 0.4 N (1.4 oz).

FIGURE 20. **Ball controls**

Downloaded from http://www.everyspec.com on 2010-01-26T2:50:27.

5.4.3.2.6 Mouse (Free-moving XY controller)

5.4.3.2.6.1 Application. A mouse may be used on any flat surface to generate x and y coordinate values which control the position of the follower on the associated display. It may be used for data pickoff or for entry of coordinate values. It should be used for zero order control only (i.e., generation of x and y outputs by the controller results in proportional displacement of the follower). It should not be used for generation of free-drawn graphics.

5.4.3.2.6.2 Dynamic characteristics. The characteristics of the mouse and placement of the maneuvering surface shall allow the operator to consistently orient the mouse to within 10° of the correct orientation without visual reference to the controller (e.g., when the operator grasps the mouse in what seems to be the correct orientation and moves it rectilinearly along what is assumed to be straight up the y axis, then the direction of movement of the follower on the CRT shall be between 350 and 10°). The mouse shall be easily movable in any direction without a change of hand grasp and shall result in smooth movement of the follower in the same direction ±10°. The controller shall be operable with either the left or right hand. A complete excursion of the mouse from side-to-side of the maneuvering area shall move the follower from side-to-side on the display regardless of scale setting or offset unless expanded movement is selected for an automatic sequencing mode of operation. If the controller can drive the follower off the edge of the display, indicators shall be provided to assist the operator in bringing the follower back onto the display.

5.4.3.2.6.3 Connection. Where the mouse is connected to the computer via a cable, the cable should be long enough to remain slack during use.

5.4.3.2.6.4 Buttons. A mouse should have one or more buttons that provide features related to various functions and control actions. The button(s) should be operable without diminishing control of the mouse. The mouse design shall permit the finger to actuate the button surface(s) from a neutral posture. Button contact surfaces should be perpendicular to displacement direction and finger motion during actuation. Resistance and displacement should conform to the criteria in Table XII.

5.4.3.2.6.5 Shape and dimensions. The mouse should be shaped to allow the operator to grasp it using either hand, with the hand in a relaxed and neutral posture (i.e., minimal wrist deviation, flexion, or extension is required). Mouse dimensions should conform to the criteria in Table XII.

TABLE XII. **Mouse**

	DIMENSIONS			BUTTON CHARACTERISTICS	
	Width	Length	Height	Resistance	Displacement
MINIMUM	40 mm (1.6”)	70 mm (2.8”)	25 mm (1.0”)	0.5 N (1.8 oz)	5 mm (0.02 “)
MAXIMUM	70 mm (2.8”)	120 mm (4.7”)	40 mm (1.6”)	1.5 N (5.4 oz)	6 mm (0.24”)

5.4.3.2.7 Light pens and other styli.

5.4.3.2.7.1 Use. A light pen may be used as a track-oriented readout device. (It may be positioned on the display screen to detect a computer-generated track by sensing its refresh pattern; the display system will then present a follower (hook) on the designed track. With suitable additional circuitry, a follower can be made to track the movement of the light pen across the screen surface, thus allowing it to function as a two-axis controller capable of serving the same purposes as the grid and stylus devices of 5.4.3.2.5.1.)

Downloaded from http://www.everyspec.com on 2010-01-26T2:50:27.

5.4.3.2.7.2 Dynamic characteristics. When used as a two-axis controller, light pen dynamic characteristics shall conform to paragraph 5.4.3.2.5.2. The stylus force required on a tablet to produce a continuous input should be not greater than 0.8 N (2.9 oz).

5.4.3.2.7.3 Dimensions and mounting. The light pen shall be 120 - 180 mm (4.7 - 7.1 in) long with a diameter of 7 - 20 mm (0.3 - 0.8 in). It should have a slip resistant surface and should weigh 0.1 - 0.25 N (0.35 - 0.875 oz). A convenient clip shall be provided at the lower right side of the CRT to hold the light pen when it is not in use.

5.4.3.2.7.4 Buttons. The contact surface of a selector button that is mounted on a stylus or light pen should have a diameter of not less than 5 mm (0.2”). The force required to actuate such a button should be 0.3 - 0.8 N (1.0 - 2.9 oz).

5.4.3.2.8 Pucks. Use and characteristics of pucks shall conform to ISO 9241-9.

5.4.3.2.9 Pedals

5.4.3.2.9.1 Use. Pedal controls should be used only where the operator is likely to have both hands occupied when control operation is required, control system force is too high for manual force capability of the operator, or standardized use of pedals has created a stereotype expectancy (e.g., vehicle pedal controls such as clutches, brakes, accelerators, and rudders).

5.4.3.2.9.2 Location. Pedal controls shall be located so that the operator can reach them easily without extreme stretching or torso twisting and can reach the maximally-displaced pedals within anthropometric limits and force-capabilities (see Figure 21). Pedals that may be held or must be adjusted (e.g., accelerator, clutch) shall be located so the operator can "rest" and "steady" the foot, i.e., the pedal shall be an appropriate critical distance above the floor so the operator's heel can rest on the floor while articulating the ankle/foot. When this cannot be done and the pedal angle is more than 20° from the horizontal floor, a heel rest shall be provided.

5.4.3.2.9.3 Control return. Except for controls which generate a continuous output, (e.g., rudder controls) pedals shall return to the original null position without requiring assistance from the operator (e.g., brake pedal). Where the operator’s foot may normally rest on the pedal between operations, sufficient resistance shall be provided to prevent the weight of the foot from inadvertently actuating the control (e.g., accelerator pedal).

5.4.3.2.9.4 Pedal travel path. The travel path shall be compatible with the natural articulation path of the operator's limbs (i.e., thigh, knee, ankle).

5.4.3.2.9.5 High force application aids. When high forces are required to fully actuate a pedal, appropriate aids shall be provided to assist the operator in applying maximum force, e.g., (a) seat backrest, (b) double-width pedal so that both feet can be used, (c) optimized seat height-to-pedal and normal reach distance for maximum force, where the seat reference point and pedal are at the same height and reach distance is configured so the angle between the upper thigh and lower leg is approximately 160° (see Figure 22).

5.4.3.2.9.6 Non-slip pedal surface. Pedals used for high force applications shall be provided with a non-skid surface. Similar surfaces are desirable for all pedals.

5.4.3.2.9.7 Dimensions, resistance, displacement and separation. Dimensions, resistance, displacement and separation of pedals shall conform to the criteria in Figure 21.

Downloaded from http://www.everyspec.com on 2010-01-26T2:50:27.

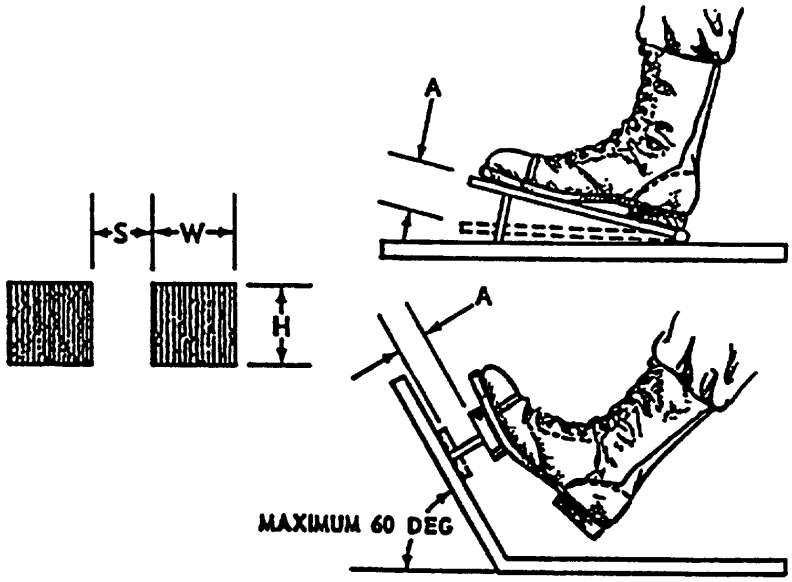

	DIMENSIONS		DISPLACEMENT			
	H Height	W Width	A Normal Operation	Heavy Boots	Ankle Flexion	Total Leg Movement
Minimum	25 mm (1 in.)	75 mm (3 in.)	13 mm (0.5 in.)	25 mm (1 in.)	25 mm (1 in.)	25 mm (1 in.)
Maximum			65 mm (2.5 in.)	65 mm (2.5 in.)	65 mm (2.5 in.)	180 mm (7 in.)

	RESISTANCE			
	Foot Not Resting on Pedal	Foot Resting On Pedal	Ankle Flexion Only	Total Leg Movement
Minimum	18 N (4 lb)	45 N (10 lb)	-	45 N (10 lb)
Maximum	90 N (20 lb)	90 N (20 lb)	45 N (10 lb)	800 N (180 lb)

	SEPARATION	
	S One Foot Random	One Foot Sequential
Minimum	100 mm (4 in.)	50 mm (2 in.)
Preferred	150 mm (6 in.)	100 mm (4 in.)

FIGURE 21. **Pedals**

Downloaded from http://www.everyspec.com on 2010-01-26T2:50:27.

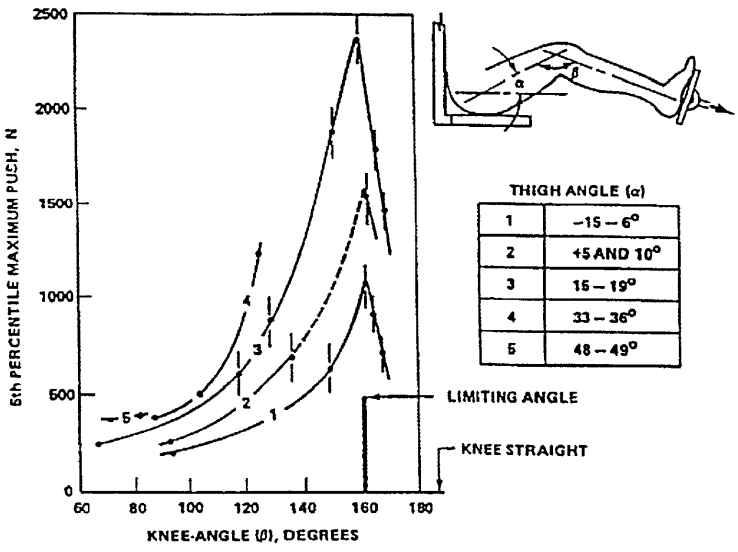

FIGURE 22. **Leg strength at various knee and thigh angles (5th percentile male data)**

5.4.4 High-force controls.

5.4.4.1 Use. In general, controls requiring operator forces exceeding the strength limits of the lowest segment of the expected user population shall not be used. In addition, high force controls shall not be used except when the operator's nominal working position provides proper body support or limb support or both, e.g., seat backrest, foot support. Sustained (i.e., durations longer than 3 seconds) high force requirements shall be avoided.

5.4.4.2 Arm, hand, and thumb-finger controls. Where arm, hand and thumb-finger controls requiring high control forces are to be used, the maximum force requirements shall not exceed those specified in Figure 23, and should be corrected, where applicable, for females. (Two thirds of each value shown is considered to be a reasonable adjustment.) (See Table I.)

5.4.4.3 Foot controls. Where foot controls require high control forces, the push force exerted by the leg depends on the thigh angle and the knee angle. Figure 22 specifies the mean maximum push at various knee and thigh angles. The maximum push is at about the l60° angle, referred to as the limiting angle. The values of Figure 22 apply to males only and should be corrected for females. (Two-thirds of each value is considered to be a reasonable adjustment.) (See Table I.)

5.4.5 Miniature controls

5.4.5.1 Use. Miniature controls may be used only when severe space limitations exist. Miniature controls shall not be used when available space is adequate for standard-sized controls or when heavy gloves or mittens will be worn.

Downloaded from http://www.everyspec.com on 2010-01-26T2:50:27.

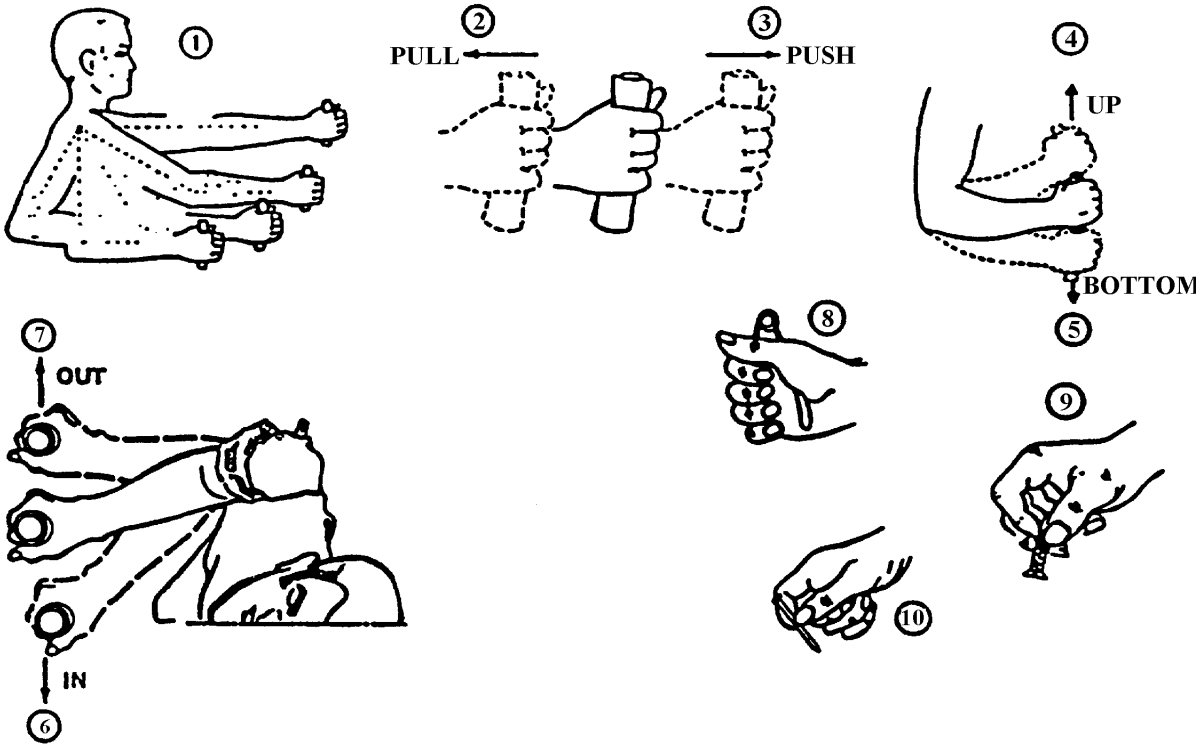

ARM STRENGTH (N)												
(1)	(2)		(3)		(4)		(5)		(6)		(7)	
DEGREE OF ELBOW FLEXION (deg)	PULL		PUSH		UP		DOWN		IN		OUT	
	L*	R*	L	R	L	R	L	R	L	R	L	R
180	222	231	187	222	40	62	58	76	58	89	36	62
150	187	249	133	187	67	80	80	89	67	89	36	67
120	151	187	116	160	76	107	93	116	89	98	45	67
90	142	165	98	160	76	89	93	116	71	80	45	71
60	116	107	98	151	67	89	80	89	76	89	53	76

HAND, AND THUMB-FINGER STRENGTH (N)				
	(8)		(9)	(10)
	HAND GRIP			
	L	R	THUMB-FINGER GRIP (PALMER)	THUMB-FINGER GRIP (TIPS)
MOMENTARY HOLD	250	260	60	60
SUSTAINED HOLD	145	155	35	35

*L = Left; R = Right

FIGURE 23. **Arm, hand, and thumb-finger strength (5th percentile male data)**

Downloaded from http://www.everyspec.com on 2010-01-26T2:50:27.

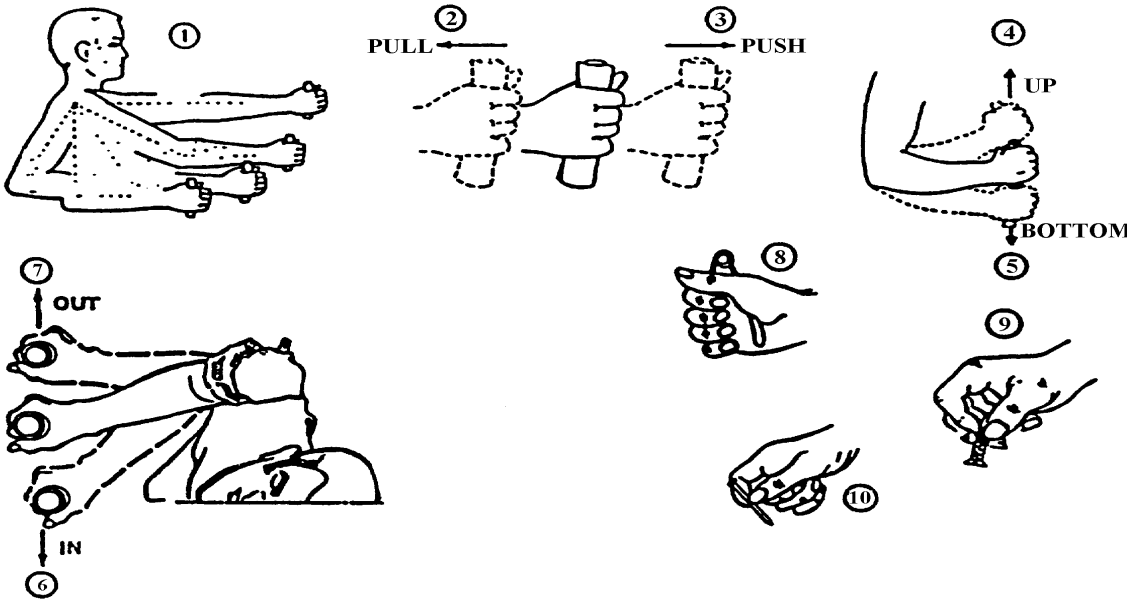

ARM STRENGTH (lb)												
(1)	(2)		(3)		(4)		(5)		(6)		(7)	
DEGREE OF ELBOW FLEXION (deg)	PULL		PUSH		UP		DOWN		IN		OUT	
	L	R*	L	R	L	R	L	R	L	R	L	R
180	50	52	42	50	9	14	13	17	13	20	8	14
150	42	56	30	42	15	18	18	20	15	20	8	15
120	34	42	26	36	17	24	21	26	20	22	10	15
90	32	37	22	36	17	20	21	26	16	18	10	16
60	26	24	22	34	15	20	18	20	17	20	12	17

HAND, AND THUMB-FINGER STRENGTH (lb)				
	(8)		(9)	(10)
	HAND GRIP			
	L	R	THUMB-FINGER GRIP (PALMER)	THUMB-FINGER GRIP (TIPS)
MOMENTARY HOLD	56	59	13	13
SUSTAINED HOLD	33	35	8	8

*L = LEFT; R = RIGHT

FIGURE 23. **Arm, hand, and thumb-finger strength (5th percentile male data) (concluded)**

Downloaded from http://www.everyspec.com on 2010-01-26T2:50:27.

5.4.5.2 Dimensions, resistance, displacement and separation. When design constraints dictate the use of miniature controls, the dimensions and separation of the controls shall be the maximum permitted by the available space up to the maxima prescribed herein for standard-sized controls. Resistance and displacement of miniature controls should conform to the criteria specified for the standard size of that type of control.

5.4.5.3 Other requirements. Other design considerations (e.g., labeling, orientation) shall conform to the requirements specified for the standard size of the control.

5.4.6 Touch-screen controls for displays

5.4.6.1 Use. Touch-screen control may be used to provide an overlaying control function to a data display device such as CRTs, dot matrix/segmented displays, electroluminescent displays, programmable indicators, or other display devices where direct visual reference access and optimum direct control access are desired.

5.4.6.2 Luminance transmission. Installed touch-screens shall have sufficient luminance transmission to allow the display to be clearly readable in the intended environment and meet the display luminance requirements herein.

5.4.6.3 Positive indication. A positive indication of touch-screen actuation shall be provided to acknowledge the system response to the control action.

*

5.4.6.4 System display response time (latency). System display response time shall be not more than 100 msec.

5.4.6.5 Impact on visual display. Characteristics of touch interactive devices shall not degrade visual display quality in a manner that impairs operator performance and shall provide sufficient spatial resolution for anticipated task performance.

5.4.6.6 Critical tasks. Where a touch screen control is used for a critical task, system response shall require confirming an additional, confirmatory action to ensure that the control actuation is, in fact, intended. If this is impractical, multiple touch actuation shall be incorporated.

5.4.6.7 Repeat delay. An initial delay of 500 - 750 msec should be provided when a repeat delay is provided. All repeat functions should display the fact that a repeat request has been initiated.

5.4.6.8 Target shape and color. Targets (e.g., keys) on a touch screen should be regular, symmetrical, and equilateral in shape. If color coding is used, it should only be a redundant form of coding.

5.4.6.9 Dimensions, resistance, and separation. The dimensions, resistance, and separation of responsive areas shall conform to Figure 24.

5.4.7 Speech recognition

5.4.7.1 Use. Speech recognition devices may be used as controls when the user's hands are occupied, when regular or frequent mobility is required, or when the user's visual attention is fully occupied. Speech recognition devices are used when:

a. the consequences of recognition errors are low,

Downloaded from http://www.everyspec.com on 2010-01-26T2:50:27.

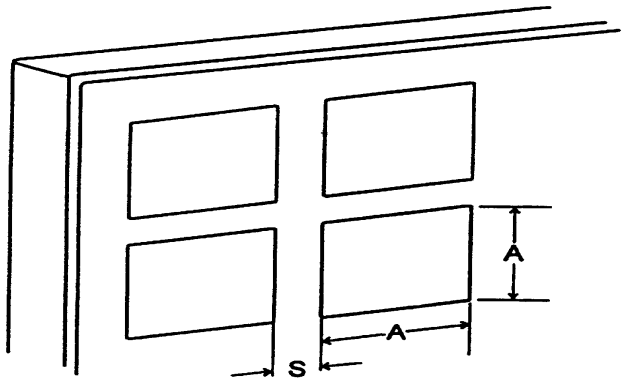

	ALPHANUMERIC / NUMERIC KEYBOARDS		
	A (Actuation Area)	S (Separation)[1]	Resistance
MINIMUM	—	0	250 mN (0.9 oz)
PREFERRED	13 x 13 mm (0.5 x 0.5”)	—	—
MAXIMUM	—	6 mm (0.25”)	1.5 N (5.3 oz)

	OTHER APPLICATIONS		
	A (Actuation Area)	S (Separation)[1]	Resistance
MINIMUM	16 x 16 mm (0.65 x 0.65”)	3 mm (0.13 in)	250 mN (0.9 oz)
MAXIMUM	38 x 38 mm (1.5 x 1.5”)	6 mm (0.25”)	1.5 N (5.3 oz)

[1]For touch screens that use a “first contact” actuation strategy, separation between targets should be not less than 5 mm (0.2”). For touch screens that use a “last contact” strategy, separation between targets may be less than 5 mm (0.20”), but not less than 3 mm (0.12”) for applications other than alphanumeric/numeric keyboards.

FIGURE 24. **Touch Screen**

b. identifying and correcting errors should be easy,

c. use is expected to be infrequent, and

d. the device can be readily inhibited when speech recognition is not desired.

Speech recognition devices should not be used for tasks that involve describing the position or manipulation of objects. Speech recognition devices should be used only where satisfactory performance can be obtained. This may preclude environments that produce stress in the user, are noisy, or have high g-loading.

Downloaded from http://www.everyspec.com on 2010-01-26T2:50:27.

5.4.7.2 General. The devices should adapt to the operator, instead of vice versa. Speech recognition devices should require minimal training.

5.4.7.3 Input vocabulary. Input vocabulary shall be minimized, consistent with system needs, and selected to provide phonetically distinct elements to eliminate misinterpretation.

5.4.7.4 Interword delays. Speech recognition devices shall not require interword delays or exaggeration in speech.

5.4.7.5 Prompting. Voice prompting from the computer should be provided where there is an advantage to freeing the user from reading a display. Lack of user response to the prompt shall result in a repetition of the prompt.

5.4.7.6 Correction capability. A capability should be provided to reject unintendent and involuntary sounds (e.g., sneezes, coughs, throat clearing, non-command words).

5.4.7.7 Alternative input device. Speech recognition devices shall not be used as the sole control device; an alternative control device shall be provided in case of speech recognition device degradation or failure.

5.4.8. Eye- and head-based controls

5.4.8.1 Use. Eye- and head-based controls may be used for a variety of tasks including teleoperations, instrument selection on a panel, and visual search tasks.

5.4.8.2 Vibration. Eye- and head-based controls should not be used in vibrating environments.

5.4.8.3 Precision. Head-based controls should not be used if the task requires frequent, precise head movements.

5.4.8.4 Dwell times. Line-of-sight dwell times should be minimized when using eye-based controls and should be not greater than 300 msec.

5.4.8.5 Response time. System response time should be minimized and should be not greater than 100 msec.

5.4.9 J-Handles. Dimensions, resistance, displacement and clearance of high-torque J-handles shall conform to the criteria in Figure 25. When using small scale, low-torque [<0.7N•m (6 lb•in)] J-handles, the handle portion should have a flattened or flared tip for finger placement, and the clearance between handle and panel surface can be less than that shown in Figure 25.

Downloaded from http://www.everyspec.com on 2010-01-26T2:50:27.

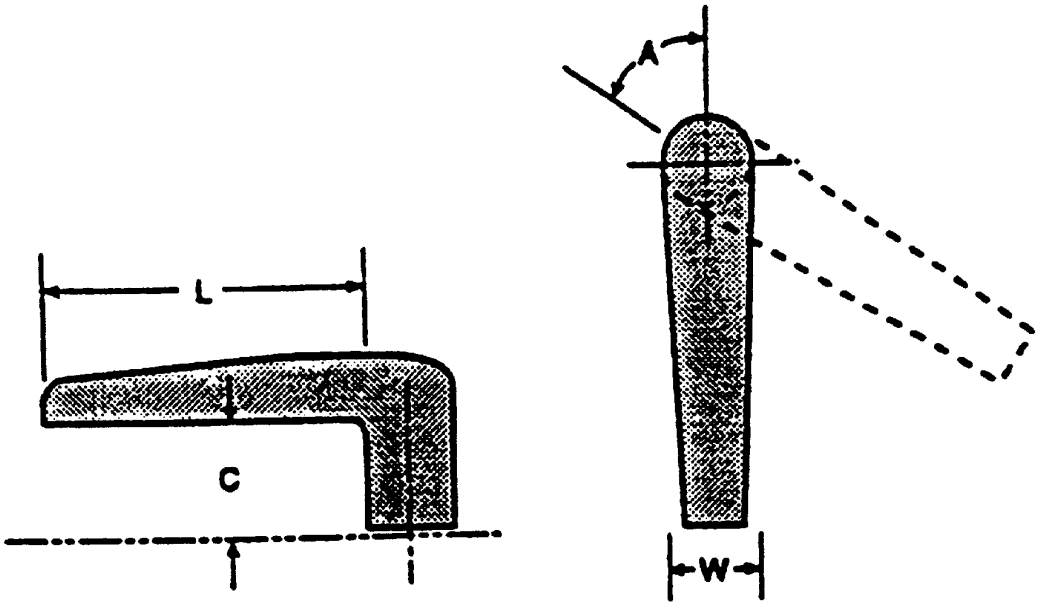

	L LENGTH	C CLEARANCE	W WIDTH	A DISPLACEMENT	RESISTANCE
MINIMUM	95 mm (3.75”)	32 mm (1.25”)	16 mm (0.65”)	± 24°	0.7 N•m (6 lb•in)
MAXIMUM	150 mm (6”)	50 mm (2”)	25 mm (1”)	± 60°	0.14 N•m (12 lb•in)

FIGURE 25. **High-torque J-handles**

Downloaded from http://www.everyspec.com on 2010-01-26T2:50:27.

5.5 Labeling.

5.5.1 General.

5.5.1.1 Application. Labels, legends, placards, signs, markings, or a combination of these shall be provided whenever personnel must identify items (except where it is obvious to the observer what an item is and what he or she is to do with it), interpret or follow procedures or avoid hazards.

5.5.1.2 Label characteristics. Label characteristics shall be consistent with required accuracy of identification, time available for recognition or other responses, distance at which the labels must be read, illuminant level and color, criticality of the function labeled, and label design practices within and between systems.

5.5.2 Orientation and location.

5.5.2.1 Orientation. Labels and information thereon should be oriented horizontally so that they may be read from left to right. Vertical orientation may be used only when labels are not critical for personnel safety or performance and where space is limited. When used, vertical labels shall read from top to bottom.

5.5.2.2 Location. Labels shall be placed on or very near the items which they identify, so as to eliminate confusion with other items and labels. Labels should not be located where a control or an operator's normal hand, arm position, or portable repair equipment will obscure the label. Labels shall be located so as not to obscure any other information needed by the operator. Controls should not obscure labels.

5.5.2.2.1 Redundant labeling. Redundant labeling should be used for installations such as pipes that take several runs and are viewed from several planes, or motors that can be viewed from two sides.

5.5.2.2.2 Curved surface labeling. Curved labels (e.g., a label that is wrapped around a pipe or cable) should be avoided.

5.5.2.3 Standardization. Labels shall be located consistently throughout the system.

5.5.3 Contents.

5.5.3.1 Equipment functions. Labels should primarily describe the functions of equipment items. Engineering characteristics or nomenclature may be described as a secondary consideration.

5.5.3.2 Abbreviations. Abbreviations should conform to applicable standards. If a new abbreviation is required, its meaning shall be obvious to the intended reader. Periods shall be omitted except when needed to preclude misinterpretation. The same abbreviation shall be used for all tenses and for singular and plural forms of a word.

5.5.3.3 Irrelevant information. Trade names and other irrelevant information shall not appear on labels or placards.

5.5.4 Qualities.

5.5.4.1 Brevity. Labels shall be unambiguous and as concise as possible without distorting the intended meaning or information. Redundancy shall be minimized. Where a general function is obvious, only the specific function shall be identified (e.g., "rpm" rather than "engine rpm").

Downloaded from http://www.everyspec.com on 2010-01-26T2:50:27.

5.5.4.2 Familiarity. Words should be familiar to the operator. For specific users (e.g., maintainers), common technical terms may be used even though they may be unfamiliar to non users. Abstract symbols (e.g., squares and Greek letters) shall be used only when they have an accepted meaning to all intended readers. Common, meaningful symbols (e.g., % and +) may be used.

5.5.4.3 Visibility and legibility. Labels and placards shall be easy to read accurately from the operational reading distances and in the anticipated vibration, motion, and illumination environments.

5.5.4.4 Access. Item labels shall not be covered or obscured by other items.

5.5.4.5 Label mounting. Labels that are not part of the equipment or unit shall be securely attached to prevent its loss, damage, slippage, or accidental or unauthorized removal. They shall be attached to a structural member that is not removed during equipment servicing or routine maintenance. Labels shall be mounted so as to minimize wear or obscuration by grease, grime, or dirt, and shall remain legible for the overhaul interval of the labeled equipment. An alternative would be etching directly on the equipment.

5.5.4.6 Contrast and background. Label color shall contrast with the equipment background specified in 5.7.8. Other label backgrounds may be used only as approved by the procuring activity.

5.5.5 Design of label characters.

5.5.5.1 Black characters. Where the ambient illuminance will be above 10 lux (0.9 ft-c), black characters shall be provided on a light background.

5.5.5.2 Dark adaptation. Where dark adaptation is required, the displayed letters or numerals shall be visible without impairing night vision. Markings should be white on a dark background.

5.5.5.3 Style. Style of label characters shall conform to MIL-M-18012, where consistent with 5.5.5.4, 5.5.5.5, 5.5.5.7, and 5.5.5.8 herein.

5.5.5.4 Capital vs lower case.

5.5.5.4.1 Labels. Labels shall be printed in all capitals, except where lower case letters or punctuation marks are indigenous to the item being identified.

5.5.5.4.2 Legends. Legends shall be printed in all capitals, without periods or commas.

5.5.5.4.3 Placards. Instructional placards may use capitals and lower case (sentence case) when the message exceeds two lines; however, for short, instructional material, all-capitals are preferred. All-capital material (consisting of a larger cap for the initial letter in a paragraph, line of instruction, or procedural step) may be used.

5.5.5.4.4 Signs. Signs shall consist of all-capitals, except when the sign is instructional and involves several lines of extended sentences, in which case sentence case may be used.

5.5.5.5 Letter width. Alphanumeric characters should have a width of 3/5 to 4/5 of the height except for single stroke characters (e.g., I, 1) which should be between 1/10 and 1/5 of the height.

5.5.5.6 Numeral width. The width of numerals shall preferably be 3/5 of the height, except for "4", which shall be 4/5 of the height, and "1" which shall be 1/5 of the height.

Downloaded from http://www.everyspec.com on 2010-01-26T2:50:27.

5.5.5.7 Wide characters. Where wide characters are required, e.g., for curved surfaces or for column alignment of numbers, the basic height-to-width ratio may be increased to as much as 1:1.

5.5.5.8 Stroke width, normal. For black characters on a white (or light) background, the stroke width shall be 1/6 to 1/7 of the height.

5.5.5.9 Stroke width, dark adaptation. Where dark adaptation is required or legibility at night is a critical factor, and white characters are specified on a dark background, the stroke width of the characters shall be from 1/7 to 1/8 of the height. The stroke width shall be the same for all letters and numerals of equal height.

5.5.5.10 Stroke width, transilluminated characters. For transilluminated characters, the stroke width shall be 1/10 of the height.

5.5.5.11 Character spacing. The minimum space between characters shall be one stroke width.

5.5.5.12 Word spacing. Space between words shall be not less than the width of one character.

5.5.5.13 Line spacing. The minimum space between lines shall be one-half character height.

5.5.5.14 Size vs luminance. The height of letters and numerals shall conform to Table XIII.

5.5.5.15 Character height and viewing distance. See Table XIII.

5.5.5.16 Confusion between characters. If a label contains pairs of characters that might be confused (e.g., O and 0, l and 1), the characters should be made distinguishably different.

TABLE XIII. **Character height versus luminance**

MARKINGS	HEIGHT[1]	
	3.5 cd/m2 (1 ft—L) OR BELOW	ABOVE 3.5 cd/m2 (1 ft—L)
Critical markings with position variable (e.g., numerals on counters)	5—8 mm (0.20 —0.31 in)	3—5 mm (0.12—0.20 in)
Critical markings with position fixed (e.g., numerals on fixed scales, controls and switch markings, or emergency instructions)	4—8 mm 0.16 - 0.31 in)	2.5—5 mm (0.10 - 0.20 in)
Noncritical markings (e.g., identification labels, routine instructions, or markings required only for familiarization)	2.5—5 mm (0.10—0.20 in)	2.5—5 mm (0.10—0.20 in)

[1]Values assume a 710 mm (28 in.) viewing distance. For other distances, multiply the above values by D/710 mm (D/28 in.).

5.5.6 Equipment labeling.

5.5.6.1 Units, assemblies, subassemblies and parts.

Downloaded from http://www.everyspec.com on 2010-01-26T2:50:27.

5.5.6.1.1. General requirements. Each unit, assembly, subassembly and part shall be labeled with a clearly visible, legible, and meaningful name, number, code, mark or symbol, as applicable.

5.5.6.1.2 Location. The gross identifying label on a unit, assembly or major subassembly shall be located externally in such a position that it is not obscured by adjacent items; on the flattest, most uncluttered surface available; or on a main chassis of the equipment.

5.5.6.1.3 Terms. Equipment shall be labeled with terms descriptive of the test or measurement applicable to their test points (e.g., "demodulator" rather than "crystal detector" or "power amplifier" rather than "bootstrap amplifier").

5.5.6.2 Controls and displays.

5.5.6.2.1 General requirements. Controls and displays shall be appropriately and clearly labeled with the basic information needed for proper identification, utilization, actuation, or manipulation of the element.

5.5.6.2.2 Simplicity. Control and display labels shall convey verbal meaning in the most direct manner, by using simple words and phrases.

5.5.6.2.3 Functional labeling. Each control and display shall be labeled according to function. The following criteria shall apply:

a. Similar names for different controls and displays shall be avoided.

b. Instruments shall be labeled in terms of what is being measured or controlled, taking into account the user and purpose.

c. Control labeling shall indicate the functional result of control movement (e.g., increase, ON, OFF) and may include calibration data where applicable. Such information shall be visible during normal operation of the control.

d. When controls and displays must be used together to make adjustments, appropriate labels shall indicate their functional relationship. Terminology shall be consistent.

5.5.6.2.4 Location. Control and display labels shall be located as specified below:

a. Ease of control operation shall be given priority over visibility of control position labels.

b. Labels should be placed above the controls and displays they describe. When the panel is above eye level, labels may be located below if that will enhance label visibility.

c. Units of measurement (e.g., volts, psi, meters) shall be labeled on the panel.

d. Labels shall identify functionally grouped controls and displays and shall be located above the groups they identify. When a line is used to enclose a functional group, the label shall be centered at the top of the group, either in a break in the line or just below the line. When colored pads are used, the label shall be centered at the top within the pad area.

e. Label location throughout a system and within panel groupings shall be uniform.

f. Adjacent labels should be sufficiently separated so they are not read as one continuous label.

Downloaded from http://www.everyspec.com on 2010-01-26T2:50:27.

5.5.6.2.5 Hierarchical labeling. A hierarchical labeling scheme should be used on control and display panels to reduce confusion and search time. Major labels should be used to identify major systems or operator work stations and component labels should identify each panel or console element. Labels should not repeat information contained in higher-level labels.

5.5.6.2.6 Size graduation. To reduce confusion and operator search time, labels shall be graduated in size. The characters in group labels shall be larger than those used to identify individual controls and displays. The characters identifying controls and displays shall be larger than the characters identifying control positions. With the smallest characters determined by viewing conditions, the dimensions of each character shall be at least approximately 25 percent larger than those of the next smaller label.

5.5.6.2.7 Overhead items. Items that are located overhead and out of view should be identified with labels on walls with an arrow pointing in the direction of the item or by a label on the floor directly below the item.

5.5.6.3 Storage cabinets. The contents of storage cabinets should be labeled on the outside of the cabinet door. For large storage cabinets, labels should be placed at standing eye height, i.e., from 127 to 165 cm (50 to 65 in) above the standing surface. A prominent redundant label that identifies the cabinet's contents should be visible when the door is open.

Downloaded from http://www.everyspec.com on 2010-01-26T2:50:27.

5.6 Physical accommodation

5.6.1 General. Design shall ensure accommodation, compatibility, operability, and maintainability by the user population. Physical accommodation is defined as having adequate reach, strength, and endurance necessary to perform all physical tasks; adequate clearance for movement, to ingress/egress work area, and perform all required tasks; adequate internal and external visibility to perform all required operations; and adequate fit of personal protective equipment to successfully perform all mission duties while receiving optimal protection from adverse environmental threats and conditions (e.g., weather, darkness, lasers, acceleration forces). The population(s) to be accommodated should include applicable joint-service and foreign military personnel.

5.6.2 Accommodation policy. Systems, equipment (including life support and emergency escape), and facilities used by operators, maintainers, and supporters shall be designed for full operation by the range of service personnel. Clothing and personal equipment (including protective or specialized equipment worn or carried by the individual) shall also be designed and sized to accommodate the size range of using personnel.

5.6.2.1 Special conditions. Under ordinary situations, the total percentage of men excluded by the design for all physical factors (size, weight, reach, strength, and endurance) shall be not greater than 5 percent, and the total percentage of women excluded by the design for all physical factors (size, weight, reach, strength, and endurance) shall be not greater than 5 percent. Where failure to accommodate the size or performance of personnel could result in a hazardous condition leading to personnel injury or equipment damage, the total percentage of men excluded by the design for all physical factors (size, weight, reach, strength, and endurance) shall not exceed 1 percent, and the total percentage of women excluded by the design for all physical factors (size, weight, reach, strength, and endurance) shall not exceed 1 percent.

5.6.2.2 Special populations. Where equipment will be used, inclusively or exclusively, by selected or specialized segments of the military population (e.g., Air Force flight crews, Navy divers), the characteristics of the job population may be used instead of the entire service population. This, however, does not change the need to accommodate maintenance and support personnel. Where equipment is intended for use both by US and foreign military personnel, appropriate anthropometric and performance data on such populations shall be used for design and sizing criteria (NATO Soldier Target Audience Description).

5.6.3 Anthropometric data. Many anthropometric data sets, particularly on military populations are available in electronic form. New anthropometric technologies enabling measurements not previously possible are emerging. Designers should take advantage of these new capabilities to obtain new data to meet requirements in 5.6.2. For general design guidance, see dimensions for the standing body, seated body, depth and breadth, circumferences and surfaces, hands and feet, and head and face in MIL-HDBK-759. MIL-HDBK-743 should be consulted for more extensive data.

5.6.3.1 Use of anthropometric data. Use of anthropometric data as design criteria shall consider (a) the nature, frequency, safety, and difficulty of the related tasks to be performed by the operator or wearer of the equipment; (b) the position of the body during performance of these tasks; (c) mobility or flexibility requirements imposed by these tasks; and (d) increments in the design-critical dimensions imposed by the need to compensate for obstacles and projections. Where design limits based on safety and health considerations are more conservative than performance criteria, they shall be given preference.

5.6.3.1.1 Adjustments. Because the above-cited anthropometric data represent nude body measurements, suitable adjustments in design-critical dimensions shall be made for light or heavy

Downloaded from http://www.everyspec.com on 2010-01-26T2:50:27.

clothing, flying suits, helmets, boots, body armor, load-carrying equipment, protective equipment, and other worn or carried items.

5.6.3.1.2 Clearance dimensions. Clearance dimensions (e.g., minimum dimensions for passageways and accesses), which must accommodate or allow passage of the body or parts of the body, must be related to performance of tasks before being substituted for performance criteria.

5.6.3.1.3 Limiting dimensions and dynamic characteristics. Dimensional and dynamic limits (e.g., maximum limits for reach distance, control movements, test point locations, operating forces) must be related to performance of tasks before being substituted for performance criteria.

5.6.3.1.4 Adjustable dimensions. Seats, restraint systems, safety harnesses, belts, controls or any equipment that must be adjusted for the comfort or performance of the individual user shall be adjustable for the range of personnel using them.

5.6.3.1.5 Multiple dimension accommodation. For accommodation of size, reach, and vision, design parameters shall be defined using the jointed distributions of all design relevant size, reach, and mass variables.

5.6.4 Strength. Because of the low correlation between strength and size, size shall not be used to determine accommodation of strength and endurance, rather, strength shall be considered separately. Specifically, it is very unlikely that military members of minimum size also have minimum strength and endurance. Strength and endurance shall be separately accommodated for the range of male and female strength and endurance of the population.

5.6.4.1 Operability. To ensure operability, the strength and endurance performance characteristics of weakest personnel performing the actual or equivalent task must be accommodated. Because human strength and endurance are specific to the task performed, accommodation of operability must be based on performance of the equivalent activity. Where accommodation is based on strength or endurance of a different activity, there must be a valid relation between the performance of the two activities.

5.6.4.2 Break Strength. Where critical items may be damaged by the exertion of large forces, the break strength shall be not less than can be exerted by the strongest person.

Downloaded from http://www.everyspec.com on 2010-01-26T2:50:27.

5.7 Workspace design.

5.7.1 General. Unless otherwise noted, the following criteria apply to ground installations and, as practical, to airborne and shipboard installations; however, where a visual display terminal is used for text processing, data entry, or data inquiry applications in an office environment or equivalent, see 5.15.

5.7.1.1 Kick space. Cabinets, consoles, and work surfaces that require an operator to stand or sit close to their front surfaces shall contain a kick space at the base at least 10 cm (4 in) deep and 10 cm (4 in) high to allow for protective or specialized footwear.

5.7.1.2 Handles. Handles on cabinets and consoles shall be recessed whenever practicable, to eliminate projections on the surface. If handles cannot be recessed, they shall be configured, located, and oriented to preclude injuring personnel or entangling their clothing or equipment.

5.7.1.3 Work space. Whenever feasible, free floor space of not less than 122 cm (4 ft) shall be provided in front of each console. For equipment racks that require maintenance, free floor space shall be provided in accordance with the following criteria.

5.7.1.3.1 Depth of work area. Clearance from the front of the rack to the nearest facing surface or obstacle shall be not less than 107 cm (42 in). The minimum space between rows of cabinets shall be 20 cm (8 in) greater than the depth of the deepest drawer (equipment).

5.7.1.3.2 Lateral work space. Lateral workspace for racks having drawers or removable equipment weighing less than 20 kg (44 lb) shall be not less than 46 cm (18 in) on one side and 10 cm (4 in) on the other (measured from the drawers or equipment in the extended position); lateral workspace for such racks with removable equipment weighing 20 kg (44 lb) or more shall be not less than 46 cm (18 in) on each side.

5.7.1.3.3 Space between rows of cabinets. Space between rows of cabinets shall be not less than 20 cm (8 in) greater than the depth of the deepest drawer or cabinet.

5.7.1.3.4 Storage space. Adequate space shall be provided on consoles or immediate work space for storing manuals, worksheets, and other required materials to include a soldiers basic combat equipment.

5.7.2 Standing operations. (See Table I.)

5.7.2.1 Work surface. Unless otherwise specified, work surfaces to support documents such as job instruction manuals or worksheets shall be 90 - 93 cm (35.4 - 36.6 in) above the floor.

5.7.2.2 Display placement, normal. Visual displays mounted on vertical panels and used in normal equipment operation shall be mounted 104 - 178 cm (41 - 70 in) above the standing surface.

5.7.2.3 Display placement, special. Displays requiring precise and frequent reading shall be mounted 127 - 165 cm (50 - 65 in) above the standing surface.

5.7.2.4 Control placement, normal. All controls mounted on a vertical surface and used in normal equipment operation shall be mounted 86 - 178 cm (34 - 70 in) above the standing surface.

5.7.2.5 Control placement, special. Controls requiring precise or frequent operation and emergency controls shall be mounted 86 - 135 cm (34 - 53 in) above the standing surface and no farther than 53 cm (21 in) laterally from the centerline.

Downloaded from http://www.everyspec.com on 2010-01-26T2:50:27.

5.7.3 Seated operations.

5.7.3.1 Work surface width and depth. A lateral work space not less than 76 cm (30 in) wide and 40 cm (16 in) deep shall be provided whenever practicable.

5.7.3.2 Work surface height. Desk tops and writing tables shall be 74 - 79 cm (29 to 31 in) above the floor, unless otherwise specified.

5.7.3.3 Writing surfaces. If consistent with operator reach requirements, writing surfaces on equipment consoles shall be not less than 40 cm (16 in) deep and should be 61 cm (24 in) wide.

5.7.3.4 Seating. Seating shall allow the user population to perform their mission functions without degradation of their performance capability in alertness, cognition, strength or dexterity and without significant or lasting pain or injury.

5.7.3.4.1 Compatibility. Work seating shall provide an adequate supporting framework for the body relative to the activities that must be carried out. Chairs to be used with sit-down consoles shall be operationally compatible with the console configuration.

5.7.3.4.2 Seat pan and vertical adjustment. The seat pan shall have an adjustable height of 38 to 54 cm (15 to 21 in) in increments of no more than 3 cm (1 in) each. (See Table I.) If the seat height exceeds 53 cm (21 in), a footrest shall be provided and single pedestal seats shall have a 5-legged base. The seat pan shall have a 0 - 7° adjustable tilt rearward, be between 38 - 46 cm (15 - 18 in) wide, and shall be not more than 40 cm (16 in) deep.

5.7.3.4.3 Backrest. A supporting backrest that reclines 100° - 115° shall be provided. The backrest shall engage the lumbar and thoracic regions of the back, and shall support the torso in such a position that the operator's eyes can be brought to the "Eye Line" with no more than 8 cm (3 in) of forward body movement. The backrest width shall be 30 - 36 cm (12 - 14 in).

5.7.3.4.4 Cushioning and upholstery. Where applicable, both the backrest and seat shall be cushioned with at least 25 mm (1 inch) of compressible material. Upholstery shall be durable, nonslip, and porous.

5.7.3.4.5 Armrests. Unless otherwise specified, armrests shall be provided. Armrests that are integral with operators' chairs shall be at least 5 cm (2 in) wide and 20 cm (8 in) long. Modified or retractable armrests shall be provided when necessary to maintain compatibility with an associated console and shall be adjustable from 19 to 28 cm (7.5 to 11 in) above the compressed sitting surface. Distance between armrests should be not less than 46 cm (18 in).

5.7.3.4.6 Seat base. Chairs shall have at least four supporting legs. Swivel chairs should have five supporting legs. The diameter of the seat base of swivel type chairs should be 46 cm (18 in).

5.7.3.4.7 Footrests. Footrests, where provided, shall contain nonskid surfaces and shall be adjustable from 2.5 to 23 cm (1 to 9 in) above the floor, not less than 30 cm (12 in) deep, and 30 - 40 cm (12 - 16 in) wide. Footrest inclination shall be 25 - 30°.

5.7.3.5 Knee room. Knee and foot room not less than 64 cm (25 in) high, 51 cm (20 in) wide, and 46 cm (18 in) deep shall be provided beneath work surfaces; however, if a fixed footrest or a foot-operated control is provided, the height dimension shall be increased accordingly.

5.7.3.6 Display placement, normal. Visual displays mounted on vertical panels and used in normal equipment operation shall be located 15 - 117 cm (6 - 46 in) above the sitting surface. (See Table I.)

Downloaded from http://www.everyspec.com on 2010-01-26T2:50:27.

5.7.3.7 Display placement, special. Displays that must be read precisely and frequently shall located in an area 36 - 89 cm (14 - 35 in) above the sitting surface, and no further than 53 cm (21 in) laterally from the centerline. (See Table I.)

5.7.3.8 Warning displays. For seated operations consoles requiring horizontal vision over the top, critical visual warning displays shall be mounted not less than 57 cm (22.5 in) above the sitting surface.

5.7.3.9 Control placement, normal. Controls mounted on a vertical surface and used in normal equipment operation shall be located 20 - 86 cm (8 - 34 in) above the sitting surface. (See Table I.)

5.7.3.10 Control placement, special. Controls that require precise or frequent operation shall be located 20 - 74 cm (8 - 29 in) above the sitting surface. (See Table I.)

5.7.4 Standard console design. (Where Table XIV or Figure 26 is cited, also see Table I.)

5.7.4.1 Dimensions. For purposes of standardization, dimensions of consoles and the units and racks which constitute operator work stations should conform to Table XIV and Figure 26.

5.7.4.2 Configurations. The configurations represented in Table XIV and Figure 26 may not be applicable to all design situations. Operational requirements may require unique design solutions. Because of the benefits and economies inherent in a standard console, design should conform with the standard configurations.

5.7.4.3 Variables. As applicable, the selected console design should accommodate required visibility over the top of the console, operator mobility (e.g., "sit", "stand", or "sit-stand"), panel space (note columns B and D in Table XIV), and volume in the area below the writing surface.

5.7.4.4 Console selection. On the basis of 5.7.4.3, the configuration that will best meet the requirements should be selected from the five console types represented in Table XIV.

TABLE XIV. **Standard console dimensions**

	MAXIMUM TOTAL CONSOLE HEIGHT FROM STANDING SURFACE	SUGGESTED VERTICAL DIMENSION OF PANEL (INCLUDING SILLS)	WRITING SURFACE: SHELF HEIGHT FROM STANDING SURFACE	SEAT HEIGHT FROM STANDING SURFACE AT MIDPOINT OF G	MAXIMUM CONSOLE WIDTH (NOT SHOWN)
	A	B	C	D	
1. SIT (WITH VISION OVER TOP)[1]	1.170 m (46 in) 1.335 m (52.5 in) 1.435 m (56.5 in)	520 mm (20.55 in) 520 mm (20.55 in) 520 mm (20.55 in)	650 mm (25.5 in) 810 mm (32 in) 910 mm (36 in)	435 mm (17 in) 595 mm (23.5 in) 695 mm (27.5 in)	1.120 m (44 in) 1.120 m (44 in) 1.120 m (44 in)
2. SIT (WITHOUT VISION OVER TOP)	1.310 m (51.5 in) 1.470 m (58.0 in) 1.570 m (62.0 in)	660 mm (26 in) 660 mm (26 in) 660 mm (26 in)	650 mm (25.5 in) 810 mm (32 in) 910 mm (36 in)	435 mm (17 in) 595 mm (23.5 in) 695 mm (27.5 in)	910 mm (36 in) 910 mm (36 in) 910 mm (36 in)
3. SIT-STAND (WITH STANDING VISION OVER TOP)	1.535 m (60.5 in)	620 mm (24.5 in)	910 mm (36 in)	695 mm (27.5 in)	910 mm (36 in)
4. STAND (WITH VISION OVER TOP)	1.535 m (60.5 in)	620 mm (24.5 in)	910 mm (36 in)	NA	1.120 m (44 in)
5. STAND (WITHOUT VISION OVER TOP)	1.830 m (72 in)	910 mm (36 in)	910 mm (36 in)	NA	910 mm (36 in)

[1]THE RANGE IN "A" IS PROVIDED TO ALLOW LATITUDE IN THE VOLUME OF THE LOWER PART OF THE CONSOLE: NOTE RELATIONSHIP TO "C" AND "D".

Downloaded from http://www.everyspec.com on 2010-01-26T2:50:27.

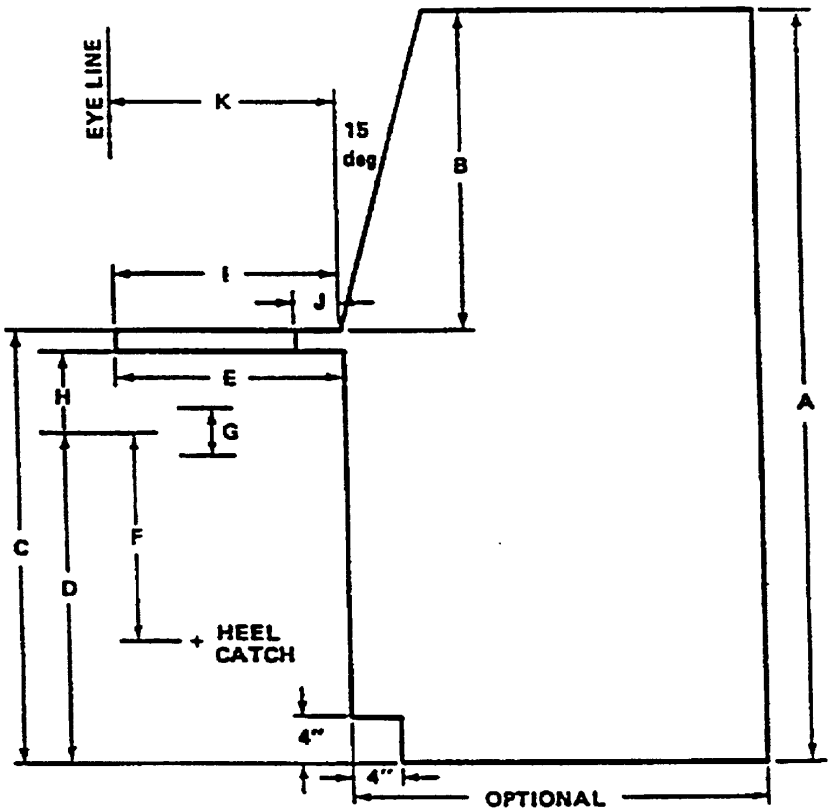

KEY	DIMENSIONS	mm	(in.)
A	MAXIMUM TOTAL CONSOLE HEIGHT FROM STANDING SURFACE	SEE TABLE IV	SEE TABLE IV
B	SUGGESTED VERTICAL DIMENSION OF PANEL, INCL SILLS		
C	WRITING SURFACE: SHELF HEIGHT FROM STANDING SURFACE		
D	SEAT HEIGHT FROM STANDING SURFACE AT MIDPOINT OF "G"		
E*	MINIMUM KNEE CLEARANCE	(460)	18
F*	FOOT SUPPORT TO SITTING SURFACE**	(460)	18
G*	SEAT ADJUSTABILITY	(150)	6
H*	MINIMUM THIGH CLEARANCE AT MIDPOINT OF "G"	(190)	7.5
I	WRITING SURFACE DEPTH INCLUDING SHELF	(400)	16
J	MINIMUM SHELF DEPTH	(100)	4
K	EYE LINE-TO-CONSOLE FRONT DISTANCE	(400)	16

*NOT APPLICABLE TO CONSOLE TYPES 4 AND 5 OF TABLE XIV.

**SINCE THIS DIMENSION MUST NOT BE EXCEEDED, A HEEL CATCH MUST BE ADDED TO THE CHAIR IF "D" EXCEEDS 460 mm (18 in.).

NOTE: A SHELF THICKNESS OF 25 mm (1 in.) IS ASSUMED. FOR OTHER SHELF THICKNESS, SUITABLE ADJUSTMENTS SHOULD BE MADE.

FIGURE 26. **Standard console dimensions key**

Downloaded from http://www.everyspec.com on 2010-01-26T2:50:27.

5.7.5 Special-purpose console design.

5.7.5.1 Horizontal wrap-around. (See Figure 27 for an example.)

5.7.5.1.1 Panel width. When requirements for preferred panel space for a single seated operator exceed a panel width of 112 cm (44 in), a flat-surface, segmented, wrap-around console should be provided to place all controls within reach. No less than 95 percent of female operators shall be able to reach all controls while seated.

5.7.5.1.2 Panel angle. The left and right segments should be angled from the frontal plane of the central segment such that they can be reached by at least 95th percent of female operators without moving the torso.

5.7.5.1.3 Dimensions (vision over top). Where vision over the top is required (thereby limiting vertical panel space), the width of the central segment shall be not more than 112 cm (44 in), and the width of the left and right segments shall not exceed 61 cm (24 in).

5.7.5.1.4 Dimensions. Where vision over the top is not required, i.e., the console height may exceed the seat height by more than 69 cm (27 in) (see Table I.), the width of the central segment shall be not more than 86 cm (34 in); the widths of the left and right segments should be not more than 61 cm (24 in).

5.7.5.1.5 Viewing angle. The total required left-to-right viewing angle shall be not more than 190° (see Figure 2) and should be reduced through appropriate control-display layout.

5.7.5.2 Vertical/stacked segments. (See Figure 28 for example.)

5.7.5.2.1 Panel division. Where direct forward vision over the top of the console is not required by a seated operator, and when lateral space is limited, the panel shall be divided into three vertical/stacked segments whose surfaces should be perpendicular to the operator's line of sight with little or no head movement.

5.7.5.2.2 Height. The center of the central segment should be 80 cm (31.5 in) above the seat reference point. The height of this segment shall be not more than 53 cm (2l in).

5.7.5.3 Sit-stand consoles. Where personnel will work from both standing or seated positions at a single workstation, console dimensions should conform to those of Table XIV. (See Table I.)

5.7.6 Stairs, ladders, ramps, platforms, catwalks, tunnels, and crawl spaces.

5.7.6.1 General criteria.

5.7.6.1.1 Selection. The selection of stairs, stair-ladders, fixed ladders, or ramps for specific applications shall be based on the angle of ascent required and the criteria in Figure 29.

5.7.6.1.2 Provision for hand-carrying equipment. Ramps, elevators, or equivalent means should be provided when equipment must be hand carried. Ladders shall not be selected in such cases, since both hands should be free to grasp the ladder. Stairs and steps should not be used where hand-carrying bulky loads or loads in excess of 13 kg (29 lbs) is required (see Table I).

5.7.6.1.3 Handrails and guardrails. Stairs, stair-ladders, fixed ladders, and ramps should be equipped with a handrail on each side. Where one or both sides are open, appropriate intermediate guardrails shall be provided to prevent personnel injury. Non-fixed vehicular-boarding ladders are neither stair ladders nor fixed ladders and are exempt from this requirement. Ladders shall not be

Downloaded from http://www.everyspec.com on 2010-01-26T2:50:27.

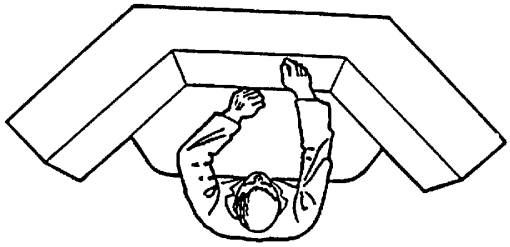

FIGURE 27. **Example of horizontal wrap-around console**

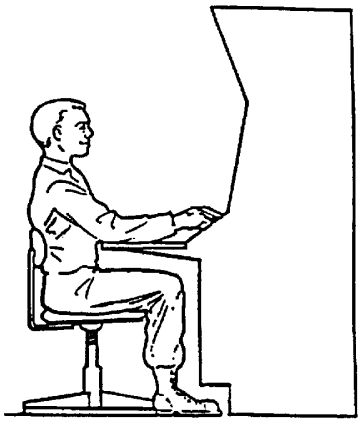

FIGURE 28. **Example of vertical/ stacked segments**

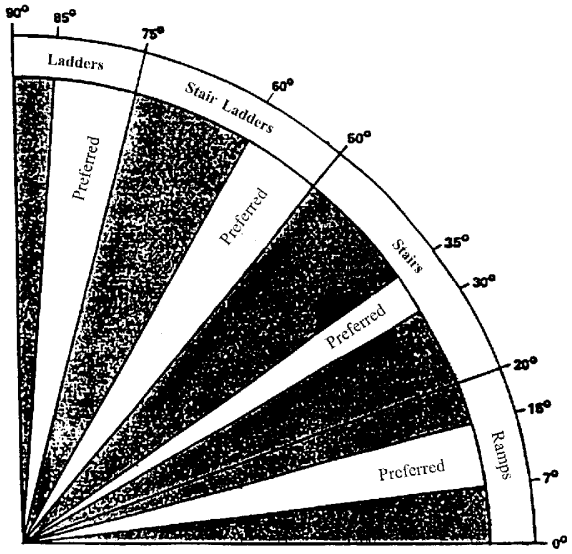

FIGURE 29. **Type of structure in relation to angle of ascent**

Downloaded from http://www.everyspec.com on 2010-01-26T2:50:27.

selected in such cases, since both hands should be free to grasp the ladder. Stairs and steps should not be used where hand-carrying bulky loads or loads in excess of 13 kg (29 lbs) is required.

5.7.6.2 Stairs. Stair dimensions should conform to the recommended values and shall be within the minimum and maximum limits of Figure 30.

5.7.6.3 Stair-ladders. Stair-ladder dimensions should conform to the recommended values and shall be within the specified minimum and maximum limits of Figure 31. The tread rise shall be open at the rear. Landings should be provided every tenth or twelfth tread. The surface of treads on exterior stair-ladders should be constructed of open grating material or should be treated with nonskid material. Stair-ladders shall be of metal construction. Handrails shall have nonslip surfaces. If simultaneous two way traffic is desired at a fixed location, separate up and down ladders should be located side by side with double center handrails. Separation between the handrails should be not less than 15 cm (6 in.) with 20 cm (8 in.) preferred.

5.7.6.4 Fixed ladders. Fixed ladder dimensions should conform to the recommended values and shall be within the specified minimum and maximum limits of Figure 32 (see Table I). Fixed ladders which are used to provide access to multiple levels should be offset at each successive level. Guardrails should be provided around the opening at the top of each fixed ladder. All fixed ladders more than 6 m (20 ft) high shall be equipped with, or include provision for, a safety device to provide positive protection from falls.

5.7.6.5 Ramps.

5.7.6.5.1 Cleating. Where special environmental conditions require cleating of pedestrian ramps, the cleats should be spaced 36 cm (14 in) apart and extend from handrail to handrail at right angles to the line of traffic.

5.7.6.5.2 Mixed traffic. When a ramp is required for both pedestrian and vehicle traffic, the vehicle bearing surface should be located in the center of the ramp, with the pedestrian surface next to the handrails. (A vehicle ramp with an adjacent pedestrian stairway is preferred for this situation.)

5.7.6.5.3 Ramp landings. Ramps shall have level landings at the top and bottom of each ramp and each ramp run. Landings shall have the following features:

a. The width of the landing shall be not less than the width of the ramp run leading to it.

b. The length of the landing should be not less than 1.5 m (60 in.).

c. Landings for ramps that change direction shall be not less than 1.5m by 1.5 m (60” by 60”).

5.7.6.6 Personnel platforms and work areas. The surfaces of exterior personnel platforms and work areas shall be constructed of open metal grating. Exterior personnel platforms where use of open grating is impractical and interior walkways shall be treated with nonskid material. All open sides of personnel platforms shall be equipped with guardrails (with intermediate rails), with a top rail height not less than 107 cm (42 in) and a toe board or guard screen height not less than 15 cm (6 in). Hand holds shall be furnished where needed. The distance between the platform edge and the centerline of the railing should be not more than 65 mm (2.5 inches).

5.7.6.7 Elevators, inclinators, and hydraulic-operated work platforms. Where these items are required, the following shall be provided:

a. Maximum load signs, located where they can be easily seen

Downloaded from http://www.everyspec.com on 2010-01-26T2:50:27.

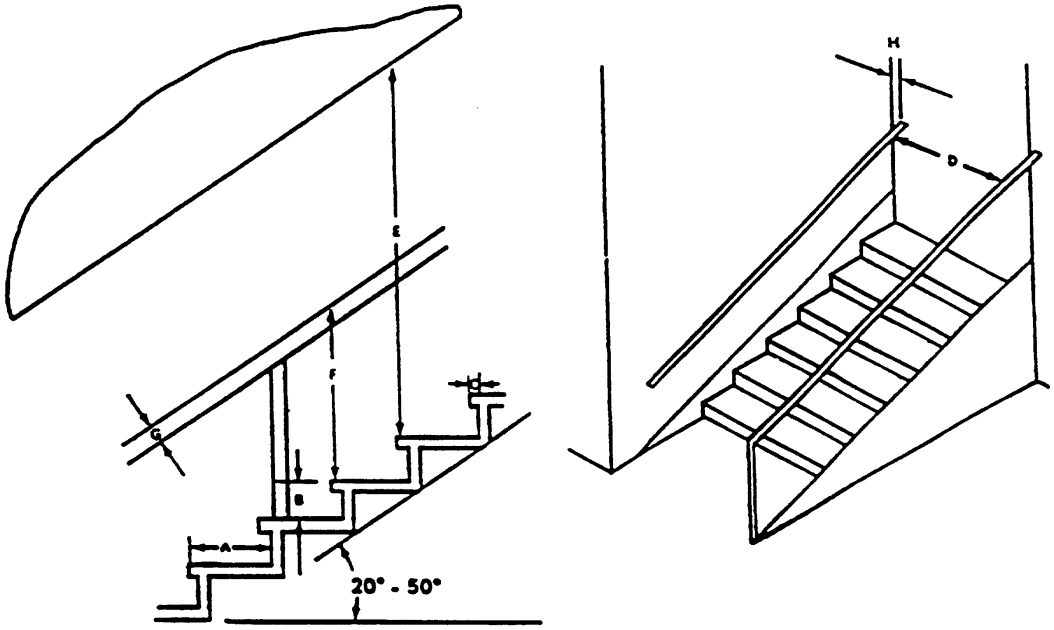

DIMENSION	MINIMUM	MAXIMUM	RECOMMENDED
A Tread depth (including nosing)	240mm (9.5 in.)	300 mm (12 in.)	280-300 mm (11-12 in.)
B Riser height	125 mm (5 in.)	200 mm (8 in.)	165-180 mm (6.5-7 in.)
C Depth of nosing (where applicable)	19 mm (0.75 in.)	38 mm (1.5 in.)	25 mm (1 in.)
D Width (handrail to handrail):			
One-way stairs	760 mm (30 in.)	---	910 mm (36 in.)
Two-way stairs	1220 mm (48 in.)	---	1300 mm (51 in.)
E Overhead clearance	1930 mm (76 in.)	---	1980 mm (78 in.)
F Height of handrail (from leading edge of tread)	840 mm (33 in.)	940 mm (37 in.)	840 mm (33 in.)
G Handrail diameter	32 mm (1.125 in.)	75 mm (3 in.)	38 mm (1.5 in.)
H Rail clearance from wall	45 mm (1.75 in.)	---	75 mm (3 in.)

FIGURE 30. **Stair dimensions**

Downloaded from http://www.everyspec.com on 2010-01-26T2:50:27.

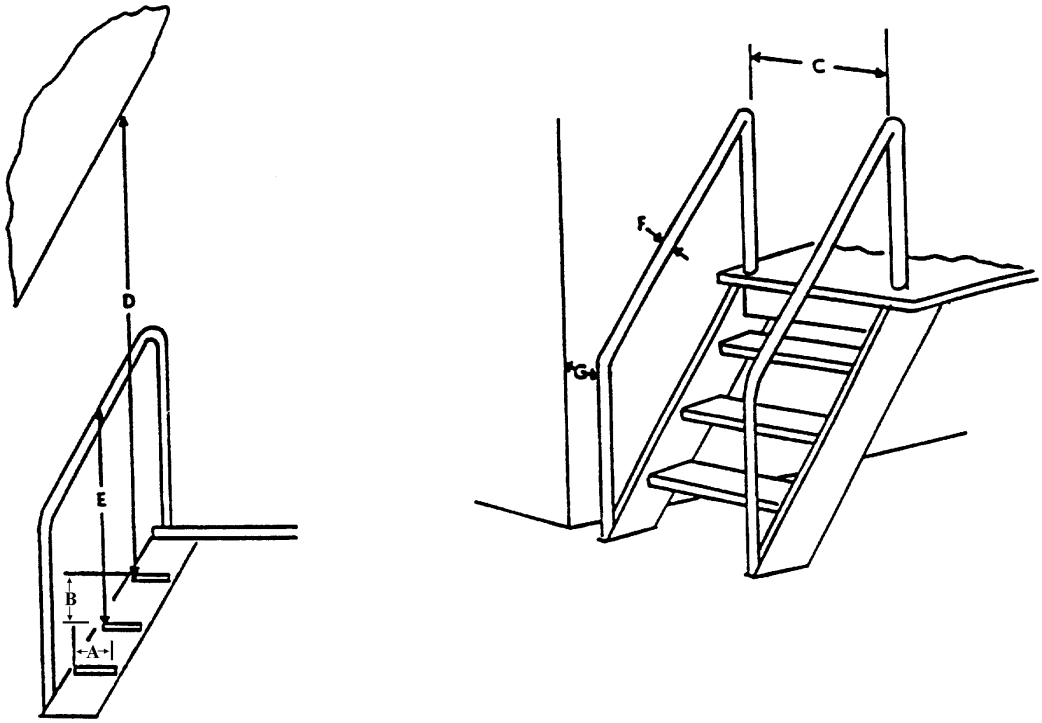

DIMENSION	MINIMUM	MAXIMUM	RECOMMENDED
A Tread depth range:			
For 50º rise	150 mm (6 in.)	250 mm (10 in.)	215 mm (8.5 in.)
For 75º rise (open ladders only)	75 mm (3 in.)	140 mm (5.5 in.)	100 mm (4 in.)
B Riser height	180 mm (7 in.)	300 mm (12 in.)	230 mm (9 in.)
C Width (handrail to handrail)	530 mm (21 in.)	610 mm (24 in.)	560 mm (22 in.)
D Overhead clearance	1730 mm* (68 in.)	---	1930 mm (78 in.)
E Height of handrail (from leading edge of tread)	860 mm (34 in.)	940 mm (37 in.)	890 mm (35 in.)
F Handrail diameter	32 mm (1.125 in.)	75 mm (3 in.)	38 mm (1.5 in.)
G Rail clearance from wall	50 mm (2 in.)	---	75 mm (3 in.)

* Whenever the distance D is less than 1,880 m (74 in.), the overhead obstruction should be painted with yellow and black stripes.

FIGURE 31. **Stair-ladder dimensions**

Downloaded from http://www.everyspec.com on 2010-01-26T2:50:27.

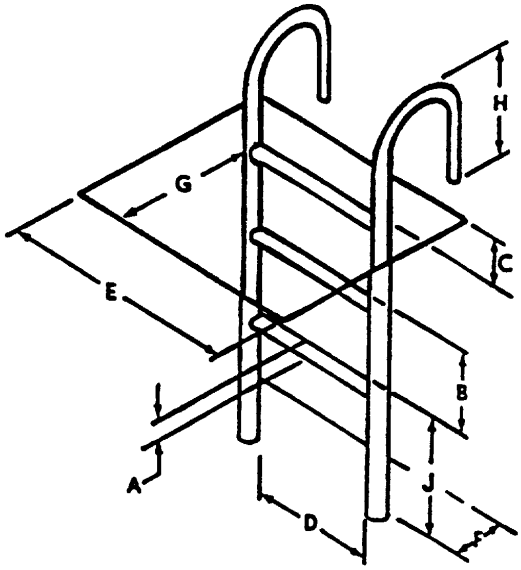

DIMENSION	MINIMUM	MAXIMUM	RECOMMENDED
A Rung thickness:			
Wood	32 mm (1.125 in.)	38 mm (1.5 in.)	35 mm (1.375 in.)
Protected metal	19 mm (0.75 in.)	38 mm (1.5 in.)	35 mm (1.375 in.)
Corrosive metal	25 mm (1 in.)	38 mm (1.5 in.)	35 mm (1.375 in.)
B Rung spacing	230 mm (9 in.)	380 mm (15 in.)	300 mm (12 in.)
C Height, rung to landing	150 mm (6 in.)	380 mm (15 in.)	380 mm (15 in.)
D Width between stringers	300 mm (12 in.)	---	460-530 mm (18-21 in.)
E Climbing clearance with	610 mm (24 in.)	---	760 mm (30 in.)
Clearance depth:			
F In back of ladder	150 mm (6 in.)	---	200 mm (8 in.)
G On climbing side (range)	910 mm (36 in.) for 75º to 760 mm (30 in.) for 90º		
H Height of stringer above landing	840 mm (33 in.)	---	910 mm (36 in.)
J Height from lower elevation to bottom rung		380 mm (15 in.)	

FIGURE 32. **Fixed ladder dimensions**

Downloaded from http://www.everyspec.com on 2010-01-26T2:50:27.

b. Guards, to prevent accidental operation of the lift

c. Limit stops, to prevent injury to personnel and damage to equipment

d. An automatic fail-safe brake or other self-locking device in case of lift mechanism failure

e. Provision for manually lowering the platform or elevator when feasible

f. Surface construction or treatment of open platforms, in accordance with 5.7.6.6

5.7.6.8 Catwalks, tunnels, and crawl spaces. Catwalks, tunnels, and crawl spaces shall be designed to accommodate operations performed therein and personal clothing and equipment.

5.7.7 Ingress and egress.

5.7.7.1 Doors. Sliding doors shall never be installed as the only personnel exit from a compartment. When a sliding door is used, a separate hinged door in the sliding door should be provided for personnel use.

5.7.7.1.1 Clearance. Fixed equipment shall be not less than 8 cm (3 in) from the swept area of hinged doors. Where possible, a clearance of not less than 10 cm (4 in) shall be provided between the door and wall.

5.7.7.1.2 Width. If it is necessary for two or more people to use a doorway simultaneously, the opening shall be not less than 1.4 m (54 in) wide and 2.0 m (77 in) high.

5.7.7.1.3 Opening direction. If normal traffic density and exiting personnel traffic in emergency conditions are expected to be low, hinged doors should open inward rather than outward into a corridor. If exiting traffic volume is expected to be high the door shall have a see-through window and should open outward into a corridor to facilitate emergency exiting. Doors in room corners should be hinged on the corner side.

5.7.7.1.4 Swinging doors. Swinging doors intended for two way traffic should be used in pairs, with the doors separated by a center door post. They should be hinged at the center post and should have openings or windows for visual access to oncoming traffic.

5.7.7.2 Hatches.

5.7.7.2.1 Configuration. Where permitted by structural considerations, wall hatches shall be flush with the floor. Hatches shall open with a single motion of the hand or foot.

5.7.7.2.2 Force requirements. When a handle is used for unlocking a hatch, the unlocking force required shall be not more than 90 N (20 lb). Hatches placed in the overhead position shall require no more than 220 N (50 lb) force for opening and closing and be operable by suitably equipped and clothed users. Additional requirements for hatch handwheels are given in 5.4.2.2.5 and Table IX.

5.7.7.2.3 Dimensions. Hatches shall accommodate suitably equipped and clothed user personnel in terms of limiting dimensions (see 5.6.3.1.3) for location and operability, and clearance dimensions (see 5.6.3.1.2) for size and passage factors. Where personnel must carry equipment through the hatch, allowance shall be made for clearance of 95% of suitably clothed male personnel. Where possible, hatch dimensions shall conform to the requirements of 5.7.7.3.

Downloaded from http://www.everyspec.com on 2010-01-26T2:50:27.

5.7.7.3 Whole-body access. Dimensions for rectangular access openings for body passage shall be not less than those dimensions shown in Figure 33. The diameter of any circular hatch shall be not less than 76 cm (30 in). Diameters of oval hatches in armored vehicles shall be not less than 43 and 71 cm (17 and 28 in). Where rescue of personnel may be required because of environmental hazards (e.g., toxic fumes) within the work place, larger access openings for two-person ingress and egress may be necessary. Where "step down" through a top access exceeds 69 cm (27 in), appropriate foot rests or steps shall be provided.

5.7.8 Surface colors.

5.7.8.1 Army. Surface colors should conform to MIL-HDBK-1473 unless specified by the procuring activity.

5.7.8.2 Navy. Surface colors shall be as specified by the procuring activity.

5.7.8.3 Air Force. Surface colors shall be selected from FED-STD-595 as follows:

a.	Console, rack and cabinet exteriors	24300 Green
b.	Panels	26492 Gray
c.	Non-critical functional grouping pads	26622 Gray
d.	Emergency/critical grouping pads	21136 Red
e.	Interior walls, and ceilings	27875 White
f.	Interiors of uninhabited compartments where maintenance is performed	26622 Gray
g.	Standard commercial equipment (if, however, such equipment becomes an integral part of an assembly, the color must be identical to or compatible with that of the assembly)	Existing Color
h.	Anodized or conductive surface	Not Painted
i.	Lettering colors:	

Background Color	Lettering Color
24300 Green	17875 White
26492 Gray	17038 Black
27875 White	17038 Black
26231 Gray	17875 White
21136 Red	17875 White
Anodized or non-painted	17038 Black or 17875 White, whichever provides better contrast
Commercial equipment	Contrasting Color

Downloaded from http://www.everyspec.com on 2010-01-26T2:50:27.

5.7.9 Lighting control and identification. Lighting controls for initial illumination shall be provided at entrances and exits of enclosed workplace areas. Lighting controls should be illuminated in areas that are frequently darkened.

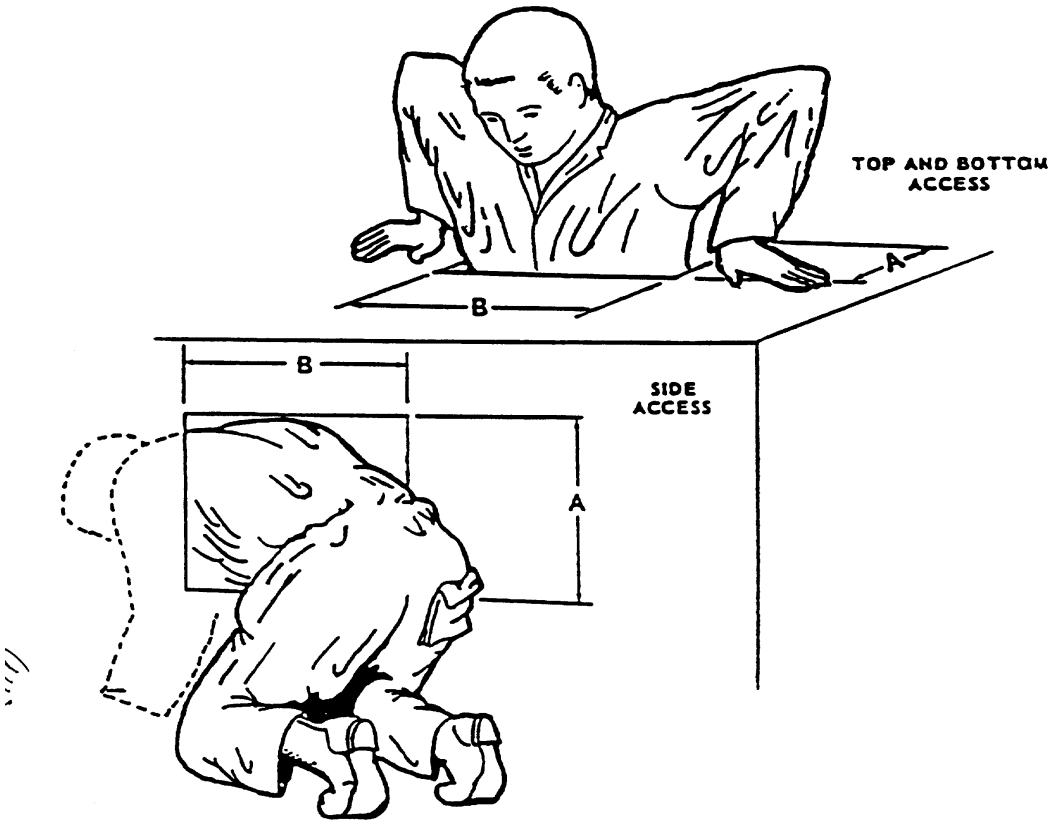

DIMENSIONS	A. DEPTH		B. WIDTH	
CLOTHING	LIGHT	BULKY	LIGHT	BULKY
TOP AND BOTTOM ACCESS	330 mm (13 in.)	410 mm (16 in.)	580 mm (23 in.)	690 mm (27 in.)
SIDE ACCESS	660 mm (26 in.)	740 mm (29 in.)	760 mm (30 in.)	860 mm (34 in.)

NOTE: DIMENSIONS SHOWN BASED ON MALE DATA.

FIGURE 33. **Whole body access opening**

Downloaded from http://www.everyspec.com on 2010-01-26T2:50:27.

5.8 Environment.

5.8.1 Heating, ventilating, and air conditioning.

5.8.1.1 Heating. Heating shall be provided within mobile personnel enclosures used for detail work or occupied during extended periods of time to maintain interior dry bulb temperature above 10°C (50°F). Within permanent and semi-permanent facilities, provisions shall be made to maintain an effective temperature (ET) or corrected effective temperature (CET) not less than 18°C (65°F) (see Figure 34), unless dictated otherwise by workload or extremely heavy clothing. (See 5.12.6.1 for vehicle heating provisions.) Heating systems shall be designed such that hot air discharge is not directed on personnel.

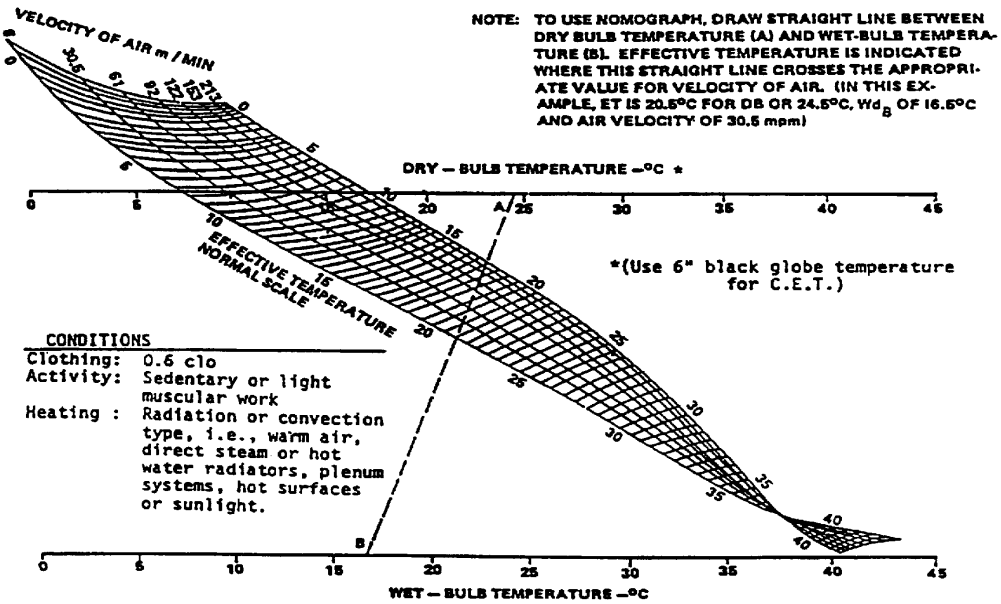

FIGURE 34. **Effective temperature (E.T.) or corrected effective temperature (C.E.T.)**

5.8.1.2 Ventilating. Adequate ventilation shall be assured by introducing fresh air into any personnel enclosure. If the enclosure volume is 4.25 m^3 (150 ft^3) or less per person, a minimum of 0.85 m^3 (30 ft^3) of ventilation air per minute shall be introduced into the enclosure; approximately two-thirds should be outdoor air. For larger enclosures, the air supply per person may be in accordance with the curves in Figure 35. Air shall be moved past personnel at a velocity not more than 60 m (200 ft) per minute. Where manuals or loose papers are used, airspeed past these items shall be not more than 30 m (l00 ft) per minute—20 m (65 ft) per minute if possible—to preclude pages in manuals from being turned by the air or papers from being blown off work surfaces. Under

Downloaded from http://www.everyspec.com on 2010-01-26T2:50:27.

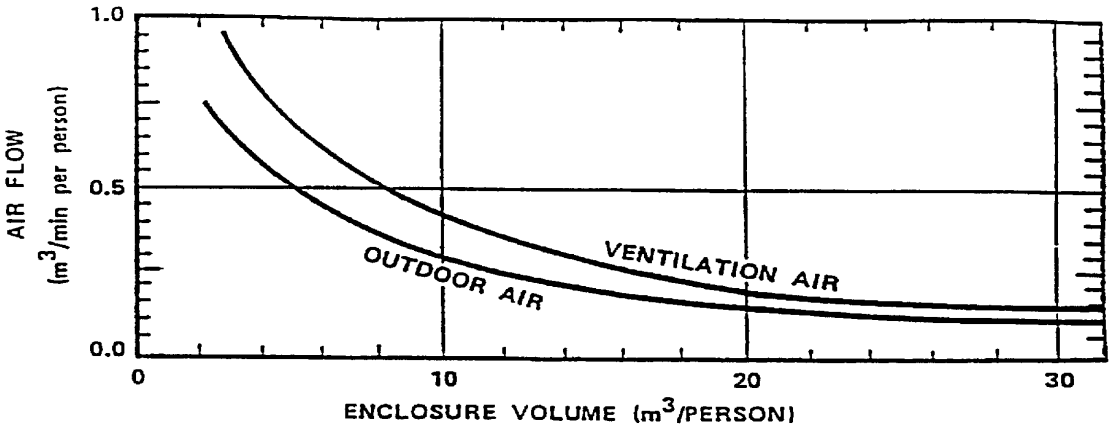

FIGURE 35. **Ventilation requirements**

NBC conditions, ventilation requirements shall be modified as required. Ventilation or other protective measures shall be provided to keep gases, vapors, dust, and fumes within the Permissible Exposure Limits specified by 29 CFR 1910 and the limits specified in the American Conference of Governmental Industrial Hygienists Threshold Limit Values. Intakes for ventilation systems shall be located to minimize the introduction of contaminated air from such sources as exhaust pipes. (See 5.12.6.2 for vehicle ventilation provisions.)

5.8.1.3 Air conditioning. The effective temperature or CET within personnel enclosures used for detail work during extended periods shall be not greater than 29.5°C (85°F) (see Figure 34). Cold-air shall not be directly discharged on personnel.

5.8.1.4 Humidity. Approximately 45% relative humidity should be provided at 2l°C (70°F). This value should decrease with rising temperatures, but should remain above l5 percent to prevent irritation and drying of body tissues, e.g., eyes, skin, and respiratory tract (see Figure 36).

5.8.1.5 Temperature uniformity. The temperature of the air at floor level and at head level at any personnel position should not differ by more than 5.5°C (l0°F).

5.8.1.6 Personal equipment thermal control. When special protective clothing or personal equipment, including full and partial pressure suits, fuel handler suits, body armor, arctic clothing and temperature regulated clothing are required and worn, a comfort micro-climate between 20°C (68°F), l4 mm Hg ambient water vapor pressure and 35°C (95°F), 3 mm Hg ambient water vapor pressure is desirable and, where possible, shall be maintained by heat transfer systems.

5.8.1.7 Thermal tolerance and comfort zones. Temperature and humidity exposure should not exceed the effective temperature limits given in Figure 36 when corrected for air velocity (Figure 34).

5.8.1.8 Limited thermal tolerance zones. Where hard physical work is to be required for more than two hours, an environment not exceeding a wet bulb globe temperature or wet-dry index of 25°C (77°F) shall be provided. Where wearing protective clothing systems (which reduce evaporation of sweat from the skin) is required, this index shall be decreased 5°C (9°F) for complete chemical protective uniforms, 4°C (7°F) for intermediate clothing systems, and 3°C (5°F) for body armor.

Downloaded from http://www.everyspec.com on 2010-01-26T2:50:27.

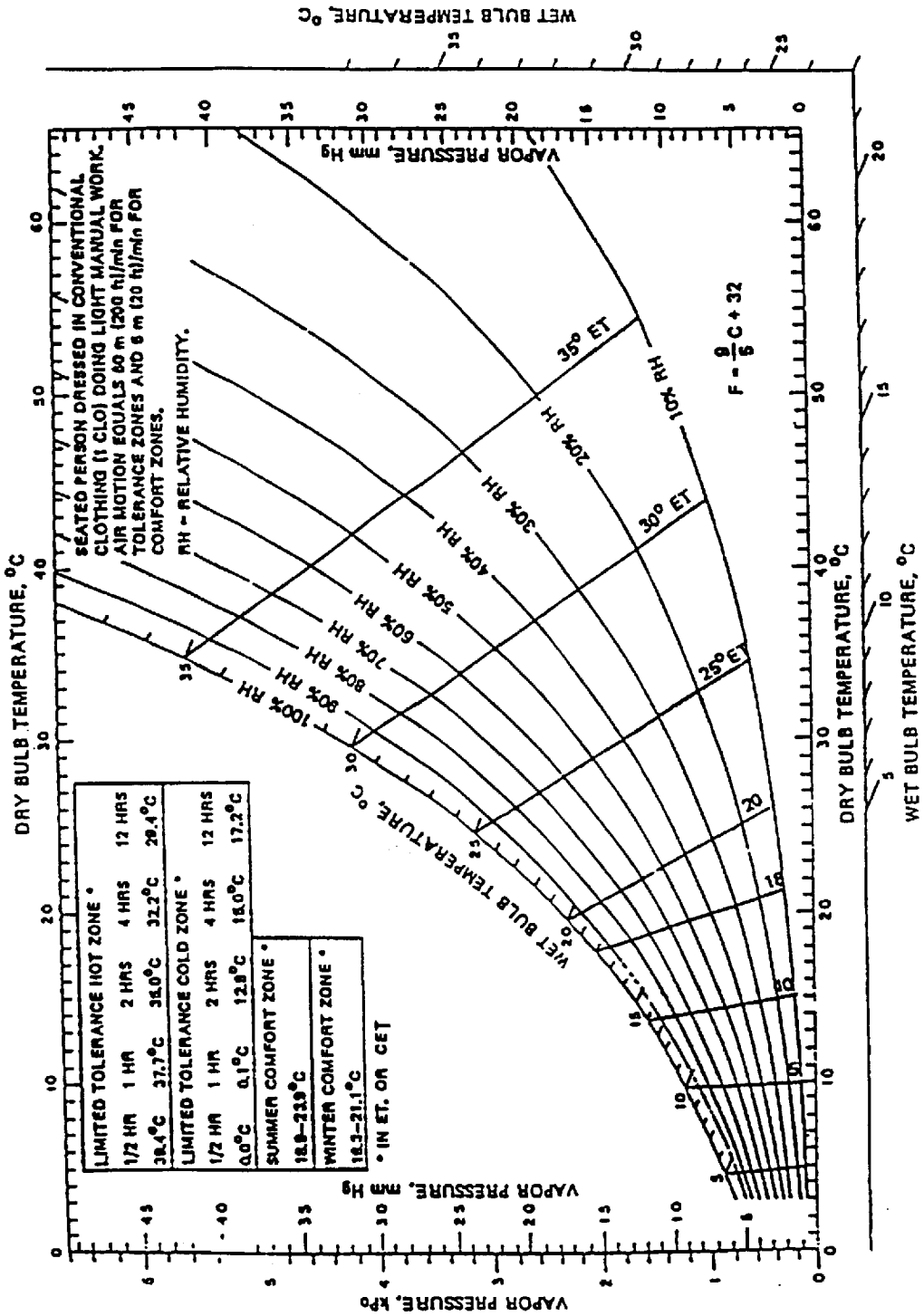

FIGURE. 36 Summer and winter comfort zones and thermal tolerance for inhabited compartments

Downloaded from http://www.everyspec.com on 2010-01-26T2:50:27.

5.8.2 Illuminance.

5.8.2.1 Workspace lighting.

5.8.2.1.1 General. General and supplementary lighting shall be used as appropriate to ensure that illumination is compatible with each operator and maintainer task situation. Where equipment is to be used in enclosures and is not subject to blackout or special low-level lighting requirements, illumination levels shall be as specified by Table XV and shall be distributed so as to reduce glare and specular reflection. (Some unusual inspection tasks may require up to 10,000 lux (1,000 foot-candles).) Light sources shall not have a perceptible flicker. Capability for dimming shall be provided. Portable lights should be provided for personnel performing visual tasks in areas where fixed illumination is not provided.

5.8.2.1.2 Colored ambient illumination. Except where required for dark adaptation or night vision goggle compatibility, colored ambient illumination should not be used.

5.8.2.2 Display lighting. See Table XVI.

5.8.2.3 Glare.

5.8.2.3.1 Direct. See MIL-HDBK-759.

5.8.2.3.2 Reflected. Luminance of specular reflection from the task background shall be not greater than three times the average luminance of the immediate background. Luminance of specular reflection from a remote task shall be not greater than 10 times the average luminance from the remote background. Work surface reflection shall be diffused and shall not exceed 20 percent specularity. Smooth, highly polished surfaces should not be placed within 60° of the operator's normal line of sight. To avoid display faces' or eyeglasses' reflecting glare into the operator's eyes, bright light sources should not be placed behind operators.

5.8.3 Acoustical noise.

5.8.3.1 General. Personnel shall be provided an acoustical environment which will not cause personnel injury, interfere with voice or any other communications, cause fatigue, or in any other way degrade system effectiveness. The fact that a component which contributes to the overall noise may be government furnished equipment shall not eliminate the requirement that the total system conform to the criteria herein.

5.8.3.2 Hazardous noise. Equipment shall not generate noise in excess of maximum allowable levels prescribed by MIL-STD-1474.

5.8.3.3 Non-hazardous noise. Workspace noise shall be reduced to levels that permit necessary direct (person-to-person) and telephone communication and establish an acceptable acoustical work environment. Criteria for workspaces are defined by either the A-weighted sound level (dB(A)) or the speech interference level (SIL) and are given in 5.8.3.3.1 through 5.8.3.3.6. The A-weighted sound level is the desired requirement. Where it is not possible to meet the specified A-weighted sound level, the corresponding SIL requirement shall be met. Figure 37 provides guidance on the relationship between required vocal-effort, speaker-to-listener distance and noise level. Procedures for determining speech intelligibility are provided in 5.3.14.

5.8.3.3.1 General workspaces. Areas requiring occasional telephone use or occasional direct communication at distances up to 1.5 m (5 ft) shall not exceed 75 dBA SIL. (Examples: maintenance shops and shelters, garages, keypunch areas, shipboard engineering areas.)

Downloaded from http://www.everyspec.com on 2010-01-26T2:50:27.

TABLE XV. **Specific task illumination requirements**

Work area of type of task	Illumination Levels lux (foot-candles)[1] Recommended	Minimum
Assembly, missile component	1075 (100)	540 (50)
Assembly, general		
Coarse	540 (50)	325 (30)
Medium	810 (75)	540 (50)
Fine	1075 (100)	810 (75)
Precise	3230 (300)	2155 (200)
Bench work		
Rough	540 (50	325 (30)
Medium	810 (75)	540 (50)
Fine	1615 (150)	1075 (100)
extra fine	3230 (300)	2155 (200)
Bomb shelters and mobile shelters, when used for rest and relief	20 (2)	10 (1)
Business machine operation (calculator, digital input, etc.)	1075 (100)	540 (50)
Console surface	540 (50)	325 (30)
Corridors	215 (20)	110 (10)
Circuit diagram	1075 (100)	540 (50)
Dials	540 (50)	325 (30)
Electrical equipment testing	540 (50)	325 (30)
Emergency lighting	NA	30 (3)
Gages	540 (50)	325 (30)
Hallways	215 (20)	110 (10)
Inspection tasks, general		
Rough	540 (50)	325 (30)
Medium	1075 (100)	540 (50)
Fine	2155 (200)	1075 (100)
extra fine	3230 (300)	2155 (200)
Machine operation, automatic	540 (50	325 (30)
Meters	540 (50)	325 (30)
Missiles:		
repair and servicing	1075 (100)	540 (50)
storage areas	215 (20)	110 (10)
general inspection	540 (50)	325 (30)

Downloaded from http://www.everyspec.com on 2010-01-26T2:50:27.

TABLE XV. **Specific task illumination requirements (Concluded)**

Work area of type of task	lux (foot-candles)[1] Recommended	Minimum
Office work, general	755 (70)	540 (50)
Ordinary seeing tasks	540 (50)	325 (30)
Panels:		
Front	540 (50)	325 (30)
Rear	325 (30)	110 (10)
Passageways	215 (20)	110 (10)
Reading:		
large print	325 (30)	110 (10)
newsprint	540 (50)	325 (30)
handwritten reports, in pencil	755 (70)	540 (50)
small type	755 (70)	540 (50)
prolonged reading	755 (70)	540 (50)
Recording	755 (70)	540 (50)
Repair work:	540 (50)	325 (30)
General	2155 (200)	1075 (100)
Instrument		
Scales	540 (50)	325 (30)
Screw fastening	540 (50)	325 (30)
Service areas, general:	215 (20)	110 (10)
Stairways	215 (20)	110 (10
Storage:		
inactive or dead	55 (5)	30 (3)
general warehouse	110 (10)	55 (5)
live, rough or bulk	110 (10)	55 (5)
live, medium	325 (30)	215 (20)
live, fine	540 (50)	325 (30)
Switchboards	540 (50)	325 (30)
Tanks, containers	215 (20)	110 (10)
Testing:		
Rough	540 (50)	325 (30)
Fine	1075 (100)	540 (50)
extra fine	2155 (200)	1075 (100)
Transcribing and tabulation	1075 (100)	540 (50)

[1] As measured at the task object or 76 cm (30 in) above the floor.
Note: As a guide in determining illumination requirements the use of a steel scale with 1/64 inch divisions requires 1950 lux (180 foot-candles) of light for optimum visibility.

Downloaded from http://www.everyspec.com on 2010-01-26T2:50:27.

TABLE XVI. **Recommendations for display lighting**

Condition of use	Lighting Technique[1]	Brightness of markings cd/m^2 (footlamberts)	Brightness Adjustment
Indicator reading, dark adaptation necessary	Red flood, indirect, or both, with operator choice	0.07–0.35 (0.02–0.1)	Continuous throughout range
Indicator reading, dark adaptation not necessary but desirable	Red or low-color-temperature white flood, indirect, or both, with operator choice	0.07–0.35 (0.02–1.0)	Continuous throughout range
Indicator reading, dark adaptation not necessary	White flood	3.5-70 (1-20)	Fixed or continuous
Panel monitoring, dark adaptation necessary	Red edge lighting, red or white flood, or both, with operator choice	0.07–3.5 (0.02–1.0)	Continuous throughout range
Panel monitoring, dark adaptation not necessary	White flood	35-70 (10–20)	Fixed or continuous
Possible exposure to bright flashes, restricted daylight	White flood	35-70 (10–20)	Fixed
Chart reading, dark adaptation necessary	Red or white flood with operator choice	0.35–3.50 (0.1–1.0)	Continuous throughout range
Chart reading, dark adaptation not necessary	White flood	17–70 (5–20)	Fixed or continuous

[1] Where detection of ground vehicles or other protected assets by image intensifier night vision devices must be minimized, blue-green light (incandescent filament through a filter which passes only wave lengths shorter than 600 nm) should be used in lieu of red light.

Downloaded from http://www.everyspec.com on 2010-01-26T2:50:27.

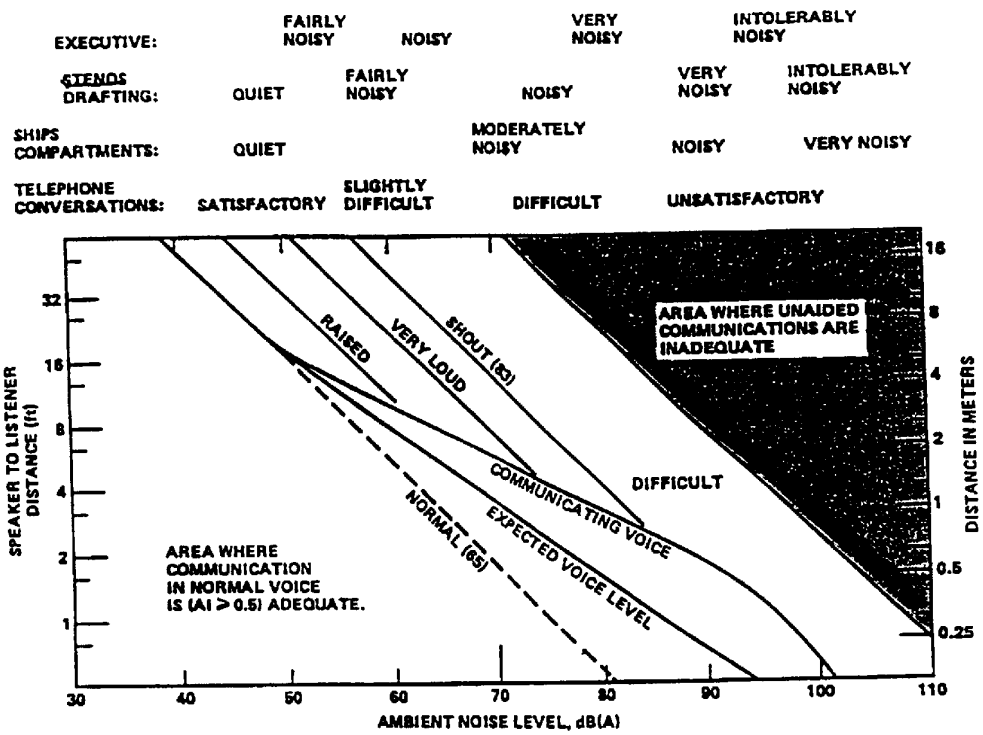

Note: Levels in parentheses refer to voice levels measured one meter from the mouth.

FIGURE 37. **Permissible distance between a speaker and listeners for specified voice levels and ambient noise levels**

5.8.3.3.2 Operational areas. Areas requiring frequent telephone use or occasional direct communication at distances up to 150 cm (5 ft) shall not exceed 65 dBA SIL. (Examples: operation centers, mobile command and communication shelters, combat information centers, word processing centers.)

5.8.3.3.3 Large workspaces. Areas requiring no difficulty with telephone use or requiring occasional direct communication at distances up to 460 cm (15 ft) shall not exceed 55 dBA SIL. (Examples: drafting rooms, shop offices, laboratories.)

5.8.3.3.4 Small office spaces/special areas. Areas requiring no difficulty with direct communication shall not exceed 45 dBA SIL. (Examples: conference rooms, libraries, offices, command and control centers.)

5.8.3.3.5 Extreme quiet areas. Areas requiring extreme quiet shall not exceed 35 dBA SIL. (Example: recording studios.)

5.8.3.3.6 Shipboard areas. As applicable, noise in shipboard areas requiring a specified speech communication environment shall be not greater than 5 dB above the levels specified by 5.8.3.3.1 to 5.8.3.3.5. Levels for spaces and categories not covered in those paragraphs shall be as given in the detailed shipbuilding specification (e.g., sonar control rooms, ward rooms). Equipment noise

Downloaded from http://www.everyspec.com on 2010-01-26T2:50:27.

acceptance criteria to achieve specified space levels shall conform to Requirement 5 of MIL-STD-1474.

5.8.3.4 Facility design.

5.8.3.4.1 General . The workspace or facility design shall minimize the ambient noise level to the extent feasible through effective sound reduction or attenuation to meet the criteria herein.

5.8.3.4.2 Attenuation by materials and layout. Acoustic materials with high sound-absorption coefficients should be provided as necessary in the construction of floors, walls, and ceiling to provide the required sound control. Transmission of excessive noise into rooms and work stations should be attenuated by such means as high density materials and multi-layer materials such as concrete, lead, gypsum board, sound attenuating (STC rated) ceiling tiles (high density), etc. and construction techniques such as staggered seams in walls, acoustic caulking of walls to the hard structure of the floor and ceiling (not suspended ceiling), attenuators in heating, ventilation and air conditioning (HVAC) supply and return ducts, STC rated doors, and at least double-paned windows. Excessive reverberation in rooms and work stations may be controlled by applying sound absorbing materials on floor, ceiling tiles, and special wall treatments. Excessive noise in rooms and work stations should be attenuated by such means as staggered construction of walls, staggering of doors in corridors or between rooms, and use of thick-paned or double-paned windows.

5.8.3.4.3 Reduction of reverberation time. Where speech communication is a consideration, the acoustical treatment of facilities should be sufficient to reduce reverberation time below the applicable limits of Figure 38.

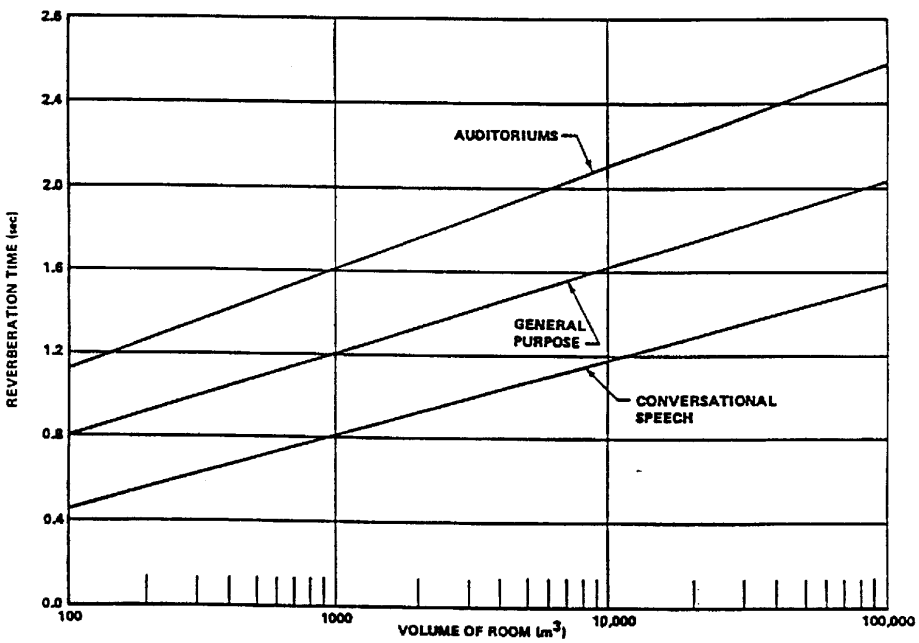

FIGURE 38. **Range of acceptable reverberation time**

Downloaded from http://www.everyspec.com on 2010-01-26T2:50:27.

5.8.4 Vibration.

5.8.4.1 Whole body vibration. The following provisions apply to whole body vibration, as defined by ISO 2041 and ISO 5805, where the vibratory motions are limited to those transmitted to the human body as a whole through supporting surfaces. This includes the feet for the standing occupant, the buttocks, back, and feet for the seated occupant, and the supporting surface of the occupant lying on his or her back. The applicable frequency range is defined as:

a. 0.1 to 0.5 Hz for motion sickness

b. 0.5 to 80 Hz for health, comfort, and perception

5.8.4.1.1 Vehicular vibration. Vehicles for use on land, sea, or air should be designed to control the transmission of whole body vibration to levels that will permit safe and effective operation and maintenance. Evaluation of military vehicle vibration and its possible effects on health, comfort, and perception, and motion sickness should conform to ISO 2631. All vibration measurements should be made at the interface between the occupant and the source of vibration whenever possible.

5.8.4.1.2 Health. To minimize the effects of whole-body vibration on health, the root-mean-square value of the frequency-weighted translational accelerations should not exceed the health guidance caution zones for the expected daily exposures defined by ISO 2631-1, Annex B. If possible, exposure within the health guidance caution zone should be avoided. Frequencies below 20 Hz should be avoided. Evaluation of environments where the vibration crest factor is above 9, or for environments containing occasional shocks of transient vibration, should conform to paragraph 6.3 of ISO 2631-1.

5.8.4.1.3 Performance. The RMS value of the frequency-weighted translational acceleration should fall below the health guidance caution zone for the expected daily exposures defined in ISO 2631-1, Annex B. Whole body vibration should also be minimized in the frequency range below 20 Hz where major body resonances occur. To preclude impairment of visual tasks, vibration between 20 and 70 Hz should be minimized. The transmission of higher frequency vibration through the seating system should also be minimized, especially where transmission of vehicle vibration to the head at such higher frequencies that can occur for seating conditions in which the body or head come in contact with the seatback or a headrest.

5.8.4.1.4 Comfort. Where specific levels of comfort listed in ISO 2631-1, Annex C must be maintained, the applicable overall vibration RMS values indicated therein should not be exceeded.

5.8.4.1.5 Motion sickness. The weighted RMS acceleration in the z-axis (between 0.1 and 0.5 Hz) should be sufficiently low to preclude or minimize motion sickness as assessed by the methods and assessment guidance specified by ISO 2631-1, Annex D.

5.8.4.2 Building vibration. Buildings intended for occupation by personnel should be designed/located to control the transmission of whole body vibration to levels that are acceptable to the occupants as specified by ISO 2631-2.

5.8.4.3 Vehicle seating systems. Vehicle seating systems should be designed to minimize the transmission of vehicle vibration to the occupant, avoid system resonances below 20 Hz, and minimize vibration in the operational frequency range of the vehicle. Where visual performance is critical, higher frequencies at the seatback and headrest should be avoided.

5.8.4.4 Equipment vibration only. Where whole-body vibration of the human operator or parts of the body are not a factor, equipment oscillations should not impair required manual control or visual performance.

Downloaded from http://www.everyspec.com on 2010-01-26T2:50:27.

5.8.5 Virtual environments (VE).

5.8.5.1 VE workstation design.

5.8.5.1.1. Physical barriers. As applicable, VE workstations should have physical barriers that prevent persons working in a VE from wandering into hazards.

5.8.5.1.2 Exclusion zone. As applicable, an equipment, personnel, and obstruction-free exclusion zone not less than 1 m (39 in) beyond each edge of the interactive area should be provided for all immersive VE applications.

5.8.5.2 VE (simulator) sickness.

5.8.5.2.1 Latency limits. System transport delays between operator input and system output (display or platform) shall not exceed 150 msec (75 msec preferred).

5.8.5.2.2 Frequency range. Motion frequencies between 0.1 Hz and 0.4 Hz shall be avoided (see 5.8.4.1.4).

5.8.5.2.3 Initial and terminal setups. Simulations should always end with the operator and visual field positioned as they started.

5.8.5.2.4 Visual field. The visual field on direct view CRTs should be limited to that required for task accomplishment.

Downloaded from http://www.everyspec.com on 2010-01-26T2:50:27.

5.9 Design for maintainer.

5.9.1 General.

5.9.1.1 Standardization. Standard parts shall be used whenever practicable and should meet the human engineering criteria herein.

5.9.1.2 Tools. Special tools shall be used only when common hand tools cannot be used, when they provide significant advantage over common hand tools, or where required by security considerations. Special tools required for operational adjustment maintenance should be securely mounted within the equipment in a readily accessible location. Grip span for tools requiring exertion of high force should be approximately 75 mm (3 in.) and shall be not greater than 100 mm (4 in.)

5.9.1.3 Modular replacement. Equipment should be replaceable as modular packages and shall be configured for removal and replacement by one person where permitted by structural, functional, and weight limitations. (See 5.9.11.3.)

5.9.1.4 Separate adjustability. It shall be possible to check and adjust each item, or function of an item, individually.

5.9.1.5 Malfunction identification. Equipment design shall facilitate rapid and positive fault detection and isolation of defective items to permit their prompt removal and replacement.

5.9.1.6 Operational environment. Equipment shall be capable of being removed, replaced, repaired, assembled and disassembled in its operational environment by personnel wearing any clothing and equipment appropriate to the environment and maintenance concept, including NBC protective clothing in an NBC contaminated environment.

*

5.9.1.7 Error-proof design. Design shall incorporate error-proofing in equipment mounting, installing, interchanging, connecting, and operating.

a. Equipment shall include physical features (e.g., supports, guides, size, or shape differences, fastener locations, and alignment pins) that prevent improper mounting. In the absence of physical features, equipment shall be labeled or coded to identify proper mounting and alignment.

b. Equipment that has the same form and function shall be interchangeable throughout a system and related systems. If equipment is not interchangeable functionally, it shall not be interchangeable physically.

c. Connectors serving the same or similar functions shall be designed to preclude mismating and/or misalignment.

d. Design, location, procedural guidance, and suitable warning labels shall be provided to prevent damage to equipment while it is being handled, installed, operated, or maintained.

5.9.1.8 Ease of access. Insofar as possible, equipment design and installation shall provide the maintainer with complete visual and physical access and a favorable working level for all parts of a system on which maintenance is performed, including workstand interfaces, support equipment interfaces, access openings, adjustment points, test points, servicing points, and connections.

5.9.1.9 Safety. Emergency shutdown devices, lockable controls, electrical cut-out switches, or warning signs or guards should be positioned to ensure safety of maintainers when it is necessary to perform maintenance on or near a live/working system.

Downloaded from http://www.everyspec.com on 2010-01-26T2:50:27.

5.9.1.10 Delicate items. Items susceptible to maintenance-induced damage, e.g., rough handling, static electricity, abrasion, contamination) shall be clearly identified and physically and procedurally guarded from abuse.

5.9.2 Mounting of items within units.

5.9.2.1 Stacking avoidance. Parts should be mounted in an orderly array on a "two-dimensional" surface, rather than stacked (i.e., a lower layer should not support an upper layer) so subassemblies do not have to be removed to access other subassemblies within the equipment.

5.9.2.2 Similar items. Similar items shall utilize a common mounting design and orientation within the unit. This mounting design shall preclude the interchange of items which are not functionally interchangeable.

5.9.3 Adjustment controls. Controls required for maintenance purposes shall comply with the basic control design requirements in 5.4 and labeling requirements in 5.5.

5.9.3.1 Knob adjustments. Knobs rather than screwdriver controls shall be used whenever adjustments must be performed more often than once per month and where access, weight, and related considerations permit their use.

5.9.3.2 Blind screwdriver adjustments. Screwdriver adjustments made without visual access are permissible only if mechanical guides are provided to align the screwdriver. Screw travel shall be limited to prevent the screw from falling out of its intended position.

5.9.3.3 Reference scale for adjustment controls. A scale or other appropriate reference shall be provided for all adjustment controls. Reference scales shall be readily visible to the person making the adjustment. Mirrors or flashlights should not be required for adjustments.

5.9.3.4 Control limits. Calibration or adjustment controls which are intended to have a limited degree of motion shall have mechanical stops sufficiently strong to prevent damage by a force or torque 100 times greater than the resistance to movement within the range of adjustment.

5.9.3.5 Critical controls. Critical and sensitive adjustment controls shall incorporate features to prevent inadvertent or accidental actuation. Operating any locking device used to prevent inadvertent actuation shall not change the adjustment setting. Where the operator or maintainer is subjected to disturbing vibrations or acceleration during the adjustment operation, suitable hand or arm support shall be provided near the control to facilitate making the adjustment.

5.9.3.6 Hazardous locations. Adjustment controls should not be located close to dangerous voltages, moving machinery, or any other hazards. If such location cannot be avoided, the controls shall be appropriately shielded and labeled.

5.9.4 Accessibility.

5.9.4.1 Structural members. Structural members or permanently installed equipment shall not visually or physically obstruct adjustment, servicing, removal of replaceable equipment or other required maintenance tasks. Panels, cases, and covers removed to access equipment shall have the same access requirements as replaceable equipment. Mounting provisions shall be directly visible and physically accessible to the maintainers.

5.9.4.2 Large items. Large items which are difficult to remove shall be mounted so that they will not prevent convenient access to other items.

Downloaded from http://www.everyspec.com on 2010-01-26T2:50:27.

5.9.4.3. Use of tools and test equipment. Check points, adjustment points, test points, cables, connectors, and labels shall be accessible and visible during maintenance. Sufficient space shall be provided for the use of test equipment and other required tools without difficulty or hazard.

5.9.4.4 Rear access. Sliding, rotating, or hinged equipment to which rear access is required shall be free to open or rotate their full distance and remain in the open position without being supported by hand. Rear access shall also be provided to plug connectors for test points, soldering, and pin removal where connectors require such operations. Aircraft installed equipment shall be configured for one-sided access.

5.9.4.5 Relative accessibility. Mission critical items that require rapid maintenance shall be most accessible. When relative criticality is not a factor, items that require the most frequent access shall be most accessible.

5.9.4.6 High-failure-rate items. High-failure-rate items should be accessible for replacement without moving non-failed items.

5.9.4.7 Skills. Access to items maintained by one technical specialty shall not require removal of items maintained by another technical specialty.

5.9.5 Lubrication.

5.9.5.1 General. Where feasible, self-lubricating components should be used. Configuration of equipment requiring lubrication shall permit lubrication and, as applicable, checking of lubricant reservoir levels without disassembly. The number of types of required lubricants should be minimized. Lubrication points should be accessible, clearly labeled, and, where applicable, provided with captive caps or covers. Extended fittings shall be provided to lubricant ports that would not otherwise be readily accessible or visible. The number of service ports should be minimized by routing service lines to a centralized servicing location(s). A clear indication that lubrication is completed shall be provided to ensure proper servicing level. Lube fittings shall be sized to prevent coupling with improper servicing devices. Where lubrication is system or mission critical, a "low lubrication level" warning message or indicator should be provided.

5.9.5.2 Labeling. Where lubrication is required, the type of lubricant to be used and the frequency of lubrication shall be specified by a label mounted at or near the lube port or grease fitting. For non-airborne equipment, a lubrication chart of permanent construction shall be mounted at the operator station of the equipment; individual labels shall not be required when the equipment has only one type of fitting and uses only one type of lubricant.

5.9.6 Case and cover mounting. Cover or shield holes shall be large enough for mounting screw clearance without perfect case alignment.

5.9.7 Cases.

5.9.7.1 Orientation. The proper orientation of an item within its case shall be made obvious by design of the case or use of appropriate labels.

5.9.7.2 Removal. Cases should lift from items rather than the converse. Equipment should be protected from damage when cases are removed or replaced. Cases shall not require manual support to remain in the open position during maintenance.

5.9.7.3 Size. Cases shall be sufficiently larger than the items they cover to facilitate installation and removal with little or no case manipulation.

Downloaded from http://www.everyspec.com on 2010-01-26T2:50:27.

5.9.7.4 Guides. Guides, tracks, and stops shall be provided as necessary to facilitate handling and to prevent damage to equipment or injury to personnel.

5.9.8 Covers.

5.9.8.1 Securing of covers. It shall be made obvious when a cover is not secured, even though it may be in place.

5.9.8.2 Instructions. If the method of opening a cover is not obvious from the construction of the cover itself, instructions shall be permanently displayed on the outside of the cover. Instructions shall consist of simple symbols such as arrows or simple words such as "push" or "push and turn."

*

5.9.8.3 Ventilation holes. If a cover or shield requires ventilation holes, the holes shall be small enough to prevent inadvertent insertion of objects that might touch high voltage sources or moving parts.

5.9.8.4 Orientation. A removable access cover that requires a particular orientation shall be design to prevent attachment in any other orientation.

5.9.8.5 Fasteners for covers. Fasteners should give a clear indication that they are fastened.

5.9.8.6 Opening covers. Access covers shall be equipped with grasp areas or other means for opening them. Covers shall accommodate handwear or special clothing that may be worn by the maintainer.

5.9.9 Access openings and covers.

5.9.9.1 Application. An access shall be provided if frequent maintenance would otherwise require removing a case or covering, opening a fitting, or dismantling an item of equipment.

5.9.9.2 Self-supporting covers. Hinged access covers that are not completely removable shall be self-supporting in the open position. The cover in the open position shall not obstruct required visual or physical access to the equipment being maintained or to related equipment during maintenance. Self-supporting covers should be capable of being opened and closed with one hand.

5.9.9.3 Labeling. Each access should be labeled with nomenclature for items visible or accessible through it, nomenclature for auxiliary equipment to be used with it, and recommended procedures. Accesses shall be labeled with warning signs, disclosing any hazards existing beyond the access and prescribing precautions. Opening or removing an access cover shall not remove or visually obstruct any hazard warning. If instructions applying to a covered item appear on a hinged door, the lettering shall be oriented to be read when the door is open. Warning notices shall be clear, direct, and attention-getting and have a 25 percent larger letter height than any detailed instructions that follow.

*

5.9.9.4 Physical access.

5.9.9.4.1 Arm and hand access.

5.9.9.4.1.1 General. Openings provided for access to interior equipment shall be located and sized to permit the required adjustment or handling and shall provide an adequate view of the item being manipulated.

Downloaded from http://www.everyspec.com on 2010-01-26T2:50:27.

5.9.9.4.1.2 Reach access dimensions and shape. The dimensions of access openings shall be not less than those shown in Figure 39. Allowance shall be made for the clearance of the maintainer's hand, applicable handwear, and clothing. Access shape shall provide clearance for the equipment (including its protuberances, attachments and handles), appropriate body parts, and tools.

5.9.9.4.1.3 Tool access dimensions. Access openings shall be large enough to operate tools required for maintenance of the equipment reached through the access.

5.9.9.4.1.4 Guarding hazardous conditions. If a hazardous condition (such as exposed, high voltage conductors) exists behind the access, the physical barrier over the access shall be equipped with an interlock that will de-energize the hazardous equipment when the barrier is open or removed. Both the presence of the hazard and the fact that an interlock exists shall be noted on the equipment case or cover such that it remains visible when the access is open. Also see 5.9.9.3.

5.9.9.4.1.5 Type of opening. Where arm and hand access is required, the following practices shall be followed in order of preference:

a. An opening with no cover unless this is likely to degrade system performance, safety, or NBC contamination survivability.

b. A hand operated (latched, sliding, or hinged) cap or door where dirt, moisture, or other foreign materials might otherwise create a problem.

c. A quick-opening cover plate using 1/4 turn captive fasteners if a cap will not meet stress requirements or space prevents a hinged cover.

d. A screw-down cover, when captive fasteners cannot be used because of stress, structure or pressurization constraints. Use minimum number of interchangeable screws to fasten door.

5.9.9.4.2 Whole body access. Where whole body access is required, the opening shall accommodate 95% of projected maintenance personnel. Where rescue of personnel may be required because of environmental hazards (e.g., toxic fumes inside fuel tanks), access openings for two-person ingress and egress shall be provided.

5.9.9.5 Visual access. Where visual access is required, the opening shall provide a visual angle sufficient to view all required information at the normal operating or maintenance position. The maintainer should be provided unrestricted visual access from the work station without bending. Where bending is required, frequency and time in the bent position shall not cause fatigue. Where visual access only is required, the following practices shall be followed in order of precedence:

a. Opening with no cover except where this might degrade system performance or NBC survivability.

b. Transparent window if dirt, moisture, or other foreign materials might otherwise create a problem.

c. Break-resistant glass window if physical wear, heat, or contact with solvents would otherwise cause optical deterioration.

d. Quick-opening opaque cover if glass will not meet stress or other requirements.

Downloaded from http://www.everyspec.com on 2010-01-26T2:50:27.

MINIMAL TWO-HAND ACCESS OPENING WITHOUT VISUAL ACCESS

Reaching with both hands to depth of 150 to 490mm:

Light clothing:	Width:	200mm or the depth of reach*
	Height:	125mm
Arctic clothing:	Width:	150mm plus 3/4 the depth of reach
	Height:	180mm

Reaching full arm's length (to shoulders) with both arms:

Width:	500mm
Height:	125mm

Inserting box grasped by handles on the front:

13mm clearance around box, assuming adequate clearance around handles

Inserting box with hands on the sides:

Light clothing:	Width:	Box plus 115mm
	+ Height:	125mm or 13mm around box*
Arctic clothing:	Width:	Box plus 180mm
	+ Height:	215mm or 15mm around box*

*Whichever is larger.

+If hands curl around bottom, allow an extra 38mm for light clothing, 75mm for arctic clothing.

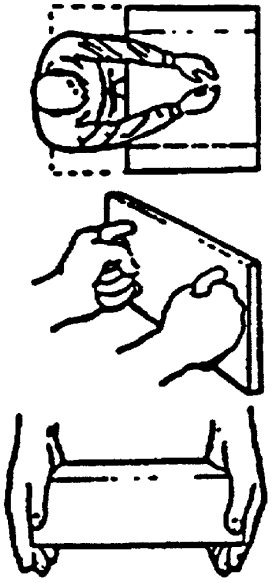

MINIMAL ONE-HAND ACCESS OPENING WITHOUT VISUAL ACCESS

	Height	Width
Empty hand, to wrist:		
Bare hand, rolled:	95mm	sq or dia
Bare hand, flat:	55mm	x 100mm or 100mm dia
Glove or mitten:	100mm	x 150mm or 150mm dia
Arctic mitten:	125mm	x 165mm or 165mm dia
Clenched hand, to wrist:		
Bare hand:	95mm	x 125mm or 125mm dia
Glove or mitten:	115mm	x 150mm or 150mm dia
Arctic mitten	180mm	x 215mm or 215mm dia
Hand plus 1" dia object, to wrist:		
Bare hand:	95mm sq or dia	
Gloved hand:	150mm sq or dia	
Arctic hand:	180mm sq or dia	
Hand plus object over 1" in dia, to wrist:		
Bare hand:	45mm clearance around object	
Glove or mitten:	65mm clearance around object	
Arctic mitten:	90mm clearance around object	
Arm to elbow:		
Light clothing:	100mm x 115mm	
Arctic clothing:	180mm sq or dia	
With object:	Clearances as above	
Arm to shoulder:		
Light clothing:	125mm sq or dia	
Arctic clothing:	215mm sq or dia	
With object:	Clearances as above	

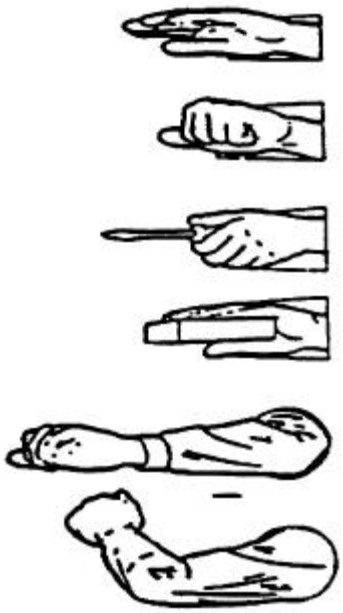

MINIMAL FINGER ACCESS TO FIRST JOINT

Push button access:	Bare hand:	32mm dia
	Gloved hand:	38mm dia
Two finger twist access:	Bare hand:	object plus 50mm
	Gloved hand:	object plus 65mm

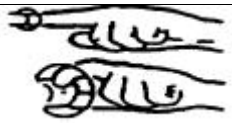

FIGURE 39. **Arm and hand access dimensions**

Downloaded from http://www.everyspec.com on 2010-01-26T2:50:27.

5.9.9.6 Access cover attachment. Hinged or removable covers shall be fastened with the fewest practical number of simple-to-use fasteners.

5.9.10 Fasteners.

5.9.10.1 General. The number and diversity of fasteners used shall be minimized commensurate with stress, bonding, pressurization, shielding, thermal, and safety requirements. When more than one size or type fastener is used on the same equipment or cover, the fasteners-equipment-cover interface shall permit the maintainer to readily distinguish the intended location of each fastener. Finger or hand-operated fasteners shall be used when consistent with these requirements, except where screws with heads flush with the case or fastening surface are required for NBC survivability. Fasteners requiring non-standard tools shall not be used.

5.9.10.2 Hinges and tongue-and-slot catches. Hinges, tongue-and-slot catches and mounting pins shall be used to minimize the number of fasteners required; however, where covers are subject to NBC survivability requirements, pin and hook arrangements, rather than hinges, should be used.

5.9.10.3 Captive fasteners. Captive fasteners shall be used where dropping or losing such items could cause damage to equipment or create a difficult or hazardous removal problem. Captive fasteners shall also be provided for access covers requiring frequent removal.

5.9.10.4 Quantity. If a hinged access panel or quick-opening fasteners will not meet stress, pressurization, shielding, or safety requirements, the minimum number of fasteners consistent with these requirements shall be used.

5.9.10.5 Latches and catches. Latches and catches shall give a clear visual indication that they are engaged. The spring action or snap-down force shall not be so strong that it could injure the maintainer. Latches and catches should be located and positioned to avoid inadvertent operation.

5.9.10.6 Threaded fasteners.

5.9.10.6.1 Head type.

5.9.10.6.1.1 High-torque. External hex or external double-hex wrenching elements shall be provided on all machine screws, bolts or other fasteners requiring more than 14 N•m (10 lbf•ft) of torque. When external wrenching fasteners cannot meet the mechanical function or personnel safety requirements, or in limited access situations, and where use is protected from accumulation of foreign material, internal wrenching fasteners may be used. Direct tool access shall be provided to allow for torquing without the use of irregular extensions.

5.9.10.6.1.2 Low-torque. External hex wrenching head, internal-hex wrenching head, combination head (internal hex or straight recess and external hex wrenching head), or Torq-set fasteners, should be provided where less than 14 N•m (10 lbf•ft) torque is required. Internal-wrenching fasteners shall be provided only where a straight, or convex, smooth surface is required for mechanical function or personnel safety, and where use is protected from accumulation of foreign material (e.g., ice, snow). Straight-slot or cross-recess type internal grip fasteners shall not be provided, except as wood fasteners or where these type fasteners are provided on standard commercial items.

5.9.10.6.2 Common fasteners. Whenever possible, identical screw and bolt heads shall be provided to allow panels and components to be removed with one tool. Combination bolt heads such as slotted hex head should be selected whenever feasible. Identical fasteners shall not be used where removal of wrong fastener can result in equipment damage or change to calibration settings.

Downloaded from http://www.everyspec.com on 2010-01-26T2:50:27.

5.9.10.6.3 Number of turns. Fasteners for mounting assemblies and subassemblies shall require a minimum number of turns, compatible with stress, alignment, positioning, and load considerations. When machine screws or bolts are required, the number of turns and the amount of torque shall be no more than necessary to provide the required strength except when a common fastener is utilized. All items requiring removal for daily or more frequently scheduled inspections and servicing shall use quick release fasteners.

5.9.10.6.4 Torque labeling. When fastener torquing to meet EMI/RFI shielding, thermal conductance or other constraints is required for organizational or intermediate level maintenance actions, an instructional label or placard should be provided near the fasteners. Such labels shall comply with requirements of 5.5 and specify the required torque value and torquing sequence.

5.9.10.6.5 Left-hand threads. Fasteners with left-hand threads, where required, should be identified so they are distinguishable from right-hand threaded fasteners.

5.9.10.6.6 Lock washers. Captive washers and lock washers shall be used when loss would otherwise present a hazard to equipment or personnel.

5.9.10.6.7 Removal and replacement with one hand or tool. Nuts and bolts that are removed and replaced frequently and that are relatively inaccessible should be mounted so that they can be removed and replaced with one hand or one tool.

5.9.11 Unit design for efficient handling.

5.9.11.1 Rests and stands. When required for maintenance tasks, rests or stands should be provided for placing units, test equipment, tools, technical orders, and manuals. When permitted by design requirements, such rests or stands shall be part of the basic unit, rack, or console chassis.

5.9.11.2 Extensions. Extensions and connected appurtenances, accessories, utilities, cables, wave guides, hoses, and similar items shall not interfere with removing, replacing, or carrying an item. If such extensions and connected appurtenances interfere with these tasks, they shall be easily removed or disconnected from the equipment before handling. Easy disconnect shall consist of hand operable quick disconnect or standard hand tool operable disconnects in that order of preference.

5.9.11.3 Weight.

5.9.11.3.1 Lifting limits. The weight limits in Table XVII, conditions A and B, shall be used as maximum values in determining the design weight of items requiring one person lifting with two hands. Double the weight limits in Table XVII shall be used as the maximum values in determining the design weight of items requiring two person lifting, provided the load is uniformly distributed between the two lifters. If the weight of the load is not uniformly distributed, the weight limit applies to the heavier lift point. Where three or more persons are lifting simultaneously, not more than 75 percent of the one-person value may be added for each additional lifter, provided that the object lifted is sufficiently large that the lifters do not interfere with one another while lifting. Where it is not possible to define the height to which an object will be lifted in operational use, the limit wherein the object is lifted to shoulder height shall be used rather than the more permissive bench height value. The values in Table XVII are applicable to objects with or without handles.

5.9.11.3.2 Lifting frequency. The equipment weight limits in Table XVII are not for repetitive lifting as found, for example, in loading or unloading transport vehicles. If the frequency of lift exceeds one lift in 5 minutes or 20 lifts per 8 hours, the permissible weight limits shall be reduced by (8.33 x LF) percent, where LF is the lift frequency in lifts per minute. For example, if the lift frequency is 6 lifts per minute, then the maximum permissible weight is reduced by 50 percent (8.33 x 6 = 50).

Downloaded from http://www.everyspec.com on 2010-01-26T2:50:27.

5.9.11.3.3 Load size. The maximum permissible weight lift limits in Table XVII apply to an object with uniform mass distribution and a compact size not exceeding 46 cm (18 in) high, 46 cm (18 in) wide, and 30 cm (12 in) deep (away from the lifter). This places the hand holds at half the depth, or 15 cm (6 in) away from the body. If the depth of the object exceeds 61 cm (24 in) the permissible weight shall be reduced by 33 percent. If the depth of the object exceeds 91 cm (36 in), the permissible weight shall be reduced by 50 percent. If the depth of the object exceeds 122 cm (48 in), the permissible weight shall be reduced by 66 percent.

TABLE XVII. **Maximum design weight limits**

HANDLING FUNCTION	POPULATION	
	Male and Female	Male Only
A. Lift an object from the floor and place it on a surface not greater than 152 cm (5 ft) above the floor.	16.8 kg (37 lb)	25.4 kg (56 lb)
B. Lift an object from the floor and place it on a surface not greater than 91 cm (3 ft) above the floor.	20.0 kg (44 lb)	39.5 kg (87 lb)
C. Carry an object 10 m (33 ft) or less.	19.0 kg (42 lb)	37.2 kg (82 lb)

5.9.11.3.4 Obstacles. The values in Table XVII assume that there are no obstacles between the person lifting and the shelf, table, bench or other surface on which the object is to be placed. Where a lower protruding shelf or other obstacle limits the lifter's approach to the desired surface, the weight limit of the object shall be reduced by 33 percent

5.9.11.3.5 Carrying limits. The weight limit in Table XVII condition C shall be used as the maximum value in determining the design weight of items requiring one person carrying of objects a distance of up to 10 m (33 ft). The maximum permissible weight for carrying also applies to an object with a handle on top, such as a tool box, which usually is carried at the side with one hand. Double this weight carrying limit shall be used as the maximum value in determining the design weight of items requiring two-person carrying, provided the load is uniformly distributed between the two carriers. Where three or more persons are carrying a load together, not more than 75 percent of the one-person value may be added for each additional person and provided that the object is sufficiently large that the workers do not interfere with one another while carrying the load. In all cases involving carrying, it is assumed that the object is first lifted from the floor, carried a distance of 10 m (33 ft) or less, and placed on the floor or on another surface not higher than 91 cm (36 in). If the final lift is to a higher height, the 152 cm (5 ft) lift height applies as the more limiting case.

5.9.11.3.6 Carrying frequency. The reduction formula expressed in paragraph 5.9.11.3.2 shall be applied to repetitive carrying in the same manner as for repetitive lifting.

5.9.11.3.7 Object carry size. The reduction formula expressed in paragraph 5.9.11.3.3 shall be applied to size of objects to be carried in the same manner as for load size.

5.9.11.3.8 User population. The "Male and Female" population values in Table XVII shall apply to any object to be lifted or carried manually; the "Male Only" population values apply only as specified by the procuring activity.

Downloaded from http://www.everyspec.com on 2010-01-26T2:50:27.

5.9.11.3.9 Labeling. Items weighing more than the one-person lift or carry values for the "Male and Female" Population of Table XVII shall be prominently labeled with weight of the object and lift limitation, e.g., mechanical or two-person lift, three-person lift. Where mechanical or power lift is required, hoist and lift points shall be provided and clearly labeled.

5.9.11.4 Push and pull forces.

5.9.11.4.1 Horizontal. Manual horizontal push and pull forces required, to be applied initially to an object to set it in motion or to be sustained over a short period of time, shall not exceed the values of Table XVIII, as applicable, or those given in Figure 23, if more appropriate to the force and movement characteristics of the task. The values shown in Table XVIII apply to males only and should be modified for females. (Two-thirds of each value shown is considered to be a reasonable value for females.) (See Table I.)

5.9.11.4.2 Vertical. Manual vertical push and pull forces required shall not exceed the applicable fifth percentile peak or mean force values of Table XIX, or those given in Figure 23, if more appropriate to the force and movement characteristics of the task.

5.9.11.5 Handles and grasp areas.

5.9.11.5.1 General. All items designed to be carried or removed and replaced shall be provided with handles or other suitable means for grasping, handling, and carrying (where appropriate, by gloved or mittened hand). Items requiring handling should be provided with not less than two handles or one handle and one grasp area. Items weighing less than 4.5 kg (10 lb) whose form factor permits them to be handled easily shall be exempt from this requirement unless otherwise specified by the procuring activity.

5.9.11.5.2 Location. Whenever possible, handles, grasp areas, or hoist points shall be located above the center of gravity and in a manner to preclude uncontrolled swinging or tilting when lifted. They shall be located to provide at least 5 cm (2 in) of clearance from obstructions during handling. The location of handles shall not interfere with installing, removing, operating, or maintaining the equipment.

5.9.11.5.3 Nonfixed handles. Nonfixed handles (e.g., hinged or fold-out) shall have a stop position for holding the handle perpendicular to the surface on which it is mounted and shall be capable of being placed into carrying position by one hand (where appropriate, by a gloved or mittened hand).

5.9.11.5.4 Grasp surface. Where an item's installation requires that its bottom surface be used as a handhold during removal or installation, a nonslip grasp surface (e.g., grooved, knurled, or frictional) shall be provided.

5.9.11.5.5 Handle dimensions. Handles which are to be used with mittened, gloved, or ungloved hands shall equal or exceed the minimum applicable dimensions shown in Figure 42.

5.9.11.5.6 Handle and grasp area force requirements. Force requirements to operate handle and grasp areas other than the controls covered by paragraph 5.4 shall not exceed the values in Figure 21.

Downloaded from http://www.everyspec.com on 2010-01-26T2:50:27.

TABLE XVIII. **Horizontal push and pull forces exertable intermittently or for short periods of time (male personnel)**

HORIZONTAL FORCE[1]	APPLIED WITH[2]	CONDITION (m = Coefficient of Friction)
100N (25 lb) push or pull	both hands or one shoulder or the back	Low traction: $0.2 < \mu < 0.3$
200N (45 lb) push or pull	both hands or one shoulder or the back	Medium traction: $\mu \sim 0.6$
250N (55 lb) push	one hand	if braced against a vertical wall 51–152 cm (20–60 in) from and parallel to the push panel
300N (70 lb) push or pull	both hands or one shoulder or the back	High traction: $\mu > 0.9$
500N (110 lb) push or pull	both hands or one shoulder or the back	if braced against a vertical wall 51–178 cm (20–70 in) from and parallel to the panel or if anchoring the feet on a perfectly nonslip ground (like a footrest)
750N (165 lb) push	the back	if braced against a vertical wall 51–178 cm (20–70 in.) from and parallel to the panel or if anchoring the feet on a perfectly nonslip ground (like a footrest)

[1]May be doubled for two and tripled for three operators pushing simultaneously. For the fourth and each additional operator, not more than 75% of their push capability should be added.
[2]See figure 40 for examples.

NOTES

1. Values are predicated upon a suitable surface for force exertion, i.e., a vertical, rough surface, approximately 40 cm (16 in) wide, and 510 - 127 cm (20 - 50 in) above the floor to allow force application with the hands, the shoulder, or the back.

2. Where applicable, force requirements should be modified for females (Two thirds of each values shown is considered to be a reasonable adjustment.)

5.9.11.5.7 Handle material. Handles or grasp areas used with bare hands should have surfaces that are not thermally (see 5.13.4.6) or electrically conductive. The surface shall be sufficiently hard to prevent embedding of grit and grime during normal use.

5.9.12 Mounting.

5.9.12.1 General. Equipment configuration shall preclude improper mounting.

5.9.12.2 Tools. Items maintained at the organizational level shall be replaceable using only common hand tools.

5.9.12.3 Removal. Replaceable items should be removable along a straight or slightly curved line, rather than through an angle.

Downloaded from http://www.everyspec.com on 2010-01-26T2:50:27.

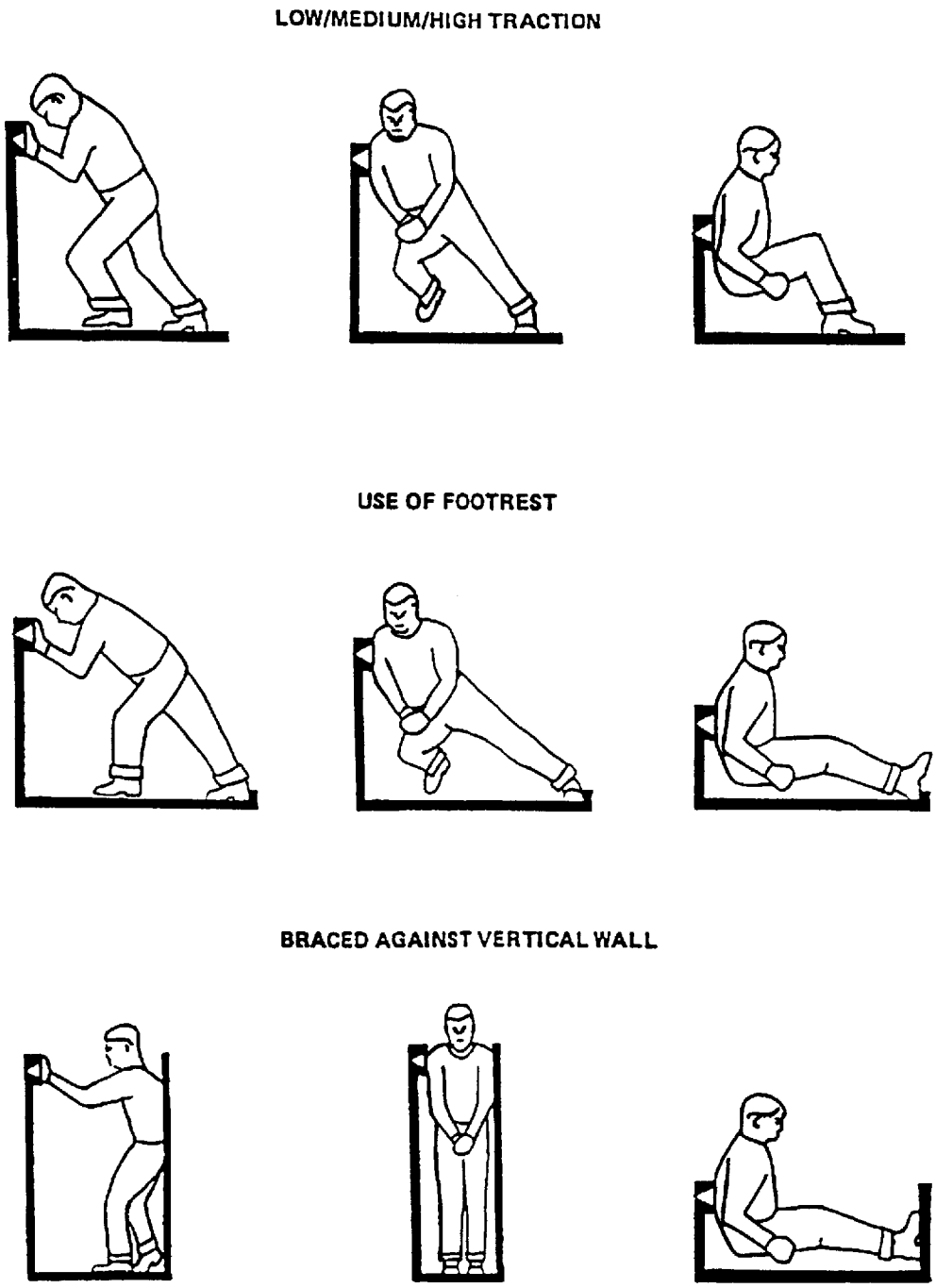

FIGURE 40. **Examples of push force conditions for Table XVII**

Downloaded from http://www.everyspec.com on 2010-01-26T2:50:27.

Table XIX. Static Muscle Strength

Strength measurements (see figure 41)	Percentile Values in Newtons (Pounds)			
	5th Percentile		95th Percentile	
	Men	Women	Men	Women
A Standing two-handed pull: 38 cm level				
Mean force	738 (166)	331 (74)	1354 (304)	818 (184)
Peak force	845 (190)	397 (89)	1437 (323)	888 (200)
B Standing two-handed pull: 50 cm level				
Mean force	758 (170)	326 (73)	1342 (302)	841 (189)
Peak force	831 (187)	374 (84)	1442 (324)	905 (203)
C Standing two-handed pull: 100 cm level				
Mean force	444 (100)	185 (42)	921 (209)	443 (100)
Peak force	504 (113)	218 (49)	988 (222)	493 (111)
D Standing two-handed push: 150 cm level				
Mean force	409 (92)	153 (34)	1017 (229)	380 (85)
Peak force	473 (106)	188 (42)	1094 (246)	430 (97)
E Standing one-handed pull: 100 cm level				
Mean force	215 (48)	103 (23)	628 (141)	284 (64)
Peak force	259 (58)	132 (30)	724 (163)	322 (72)
F Seated one-handed pull: Centerline, 45 cm level				
Mean force	227 (51)	106 (24)	678 (152)	392 (88)
Peak force	273 (61)	126 (29)	758 (170)	451 (101)
G Seated one-handed pull: Side, 45 cm level				
Mean force	240 (54)	109 (25)	604 (136)	337 (76)
Peak force	273 (61)	134 (30)	659 (148)	395 (89)
H Seated two-handed pull: Centerline, 38 cm level				
Mean force	595 (134)	242 (54)	1221 (274)	770 (173)
Peak force	699 (157)	285 (64)	1324 (298)	842 (189)
I Seated two-handed pull Centerline, 50 cm level				
Mean force	525 (118)	204 (46)	1052 (237)	632 (142)
Peak force	596 (134)	237 (53)	1189 (267)	697 (157)

Downloaded from http://www.everyspec.com on 2010-01-26T2:50:27.

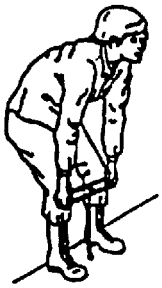

A. STANDING TWO–HANDED PULL: 38 cm (15") LEVEL

STANDING WITH FEET 45 cm (18") APART AND KNEES BENT. BENDING AT WAIST, GRASPING BOTH SIDES OF 45 cm (18") LONG HANDLE LOCATED DIRECTLY IN FRONT, 38 cm (15") ABOVE STANDING SURFACE, AND PULLING, USING PRIMARILY ARMS, SHOULDERS AND LEGS.

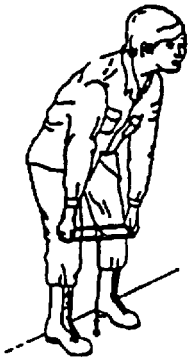

B. STANDING TWO–HANDED PULL: 50 cm (20") LEVEL

STANDING WITH FEET 45 cm (18") APART AND KNEES STRAIGHT. BENDING AT WAIST, GRASPING BOTH SIDES OF 45 cm (18") LONG HANDLE LOCATED DIRECTLY IN FRONT, 50 cm (20") ABOVE STANDING SURFACE, AND PULLING, USING PRIMARILY ARMS AND SHOULDERS.

C. STANDING TWO–HANDED PULL: 100 cm (39") LEVEL

STANDING ERECT WITH FEET 45 cm (18") APART, GRASPING BOTH SIDES OF 45 cm (18") LONG HANDLE LOCATED DIRECTLY IN FRONT, 100 cm (39") ABOVE STANDING SURFACE, AND PULLING, USING THE ARMS.

FIGURE 41. **Static muscle strength**

Downloaded from http://www.everyspec.com on 2010-01-26T2:50:27.

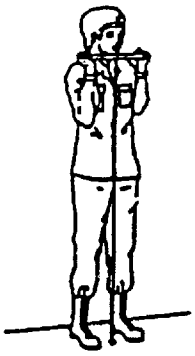

D. STANDING TWO–HANDED PUSH: 150 cm (59") LEVEL

STANDING ERECT WITH FEET 45 cm (18") APART, GRASPING FROM BELOW, BOTH SIDES OF 45 cm (18") LONG HANDLE LOCATED DIRECTLY IN FRONT, 150 cm (59") ABOVE STANDING SURFACE. PUSHING UPWARD USING ARMS AND SHOULDERS.

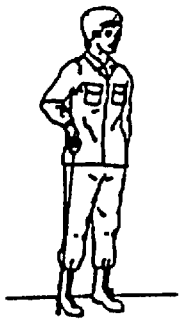

E. STANDING ONE–HANDED PULL: 100 cm (39") LEVEL

STANDING ERECT WITH FEET 15 cm (6") APART, DOMINANT HAND GRASPING UNDERSIDE OF D–RING LOCATED DIRECTLY TO THE SIDE, 100 cm (39") ABOVE STANDING SURFACE. PULLING UPWARD WHILE KEEPING SHOULDER SQUARE AND OTHER ARM RELAXED AT SIDE.

F. SEATED ONE–HANDED PULL: SEAT CENTERLINE 45 cm (18") LEVEL

SITTING ERECT WITH FEET 55 cm (22") APART, DOMINANT HAND GRASPING UNDERSIDE OF D–RING LOCATED DIRECTLY TO THE FRONT, 45 cm (18") ABOVE THE FLOOR. PULLING UPWARD WHILE KEEPING SHOULDERS SQUARE AND OTHER ARM RESTING IN LAP.

FIGURE 41. **Static muscle strength (Continued)**

Downloaded from http://www.everyspec.com on 2010-01-26T2:50:27.

G. SEATED ONE–HANDED PULL: SIDE OF SEAT, 45 cm (18") LEVEL

SITTING ERECT WITH FEET 55 cm (22") APART, DOMINANT HAND GRASPING UNDERSIDE OF D–RING LOCATED A SHORT DISTANCE TO SIDE, 45 cm (18") ABOVE THE FLOOR. PULLING UPWARD WHILE KEEPING SHOULDERS SQUARE AND OTHER ARM RESTING IN LAP.

H. SEATED TWO–HANDED PULL: CENTERLINE OF SEAT, 38 cm (15") LEVEL

SITTING ERECT WITH FEET 55 cm (22") APART. BENDING SLIGHTLY AT WAIST, GRASPING BOTH SIDES OF 15 cm (6") LONG HANDLE LOCATED DIRECTLY TO THE FRONT, 38 cm (15") ABOVE THE FLOOR. PULLING UPWARD, USING ARMS AND SHOULDERS, KEEPING ARMS OFF THIGHS.

I. SEATED TWO–HANDED PULL: CENTERLINE OF SEAT, 50 cm (20") LEVEL

SITTING ERECT WITH FEET 55 cm (22") APART. BENDING SLIGHTLY AT WAIST, GRASPING BOTH SIDES OF 15 cm (6") LONG HANDLE LOCATED DIRECTLY TO THE FRONT, 50 cm (20") ABOVE THE FLOOR. PULLING UPWARD, USING ARMS AND SHOULDERS, KEEPING ARMS OFF THIGHS.

FIGURE 41. **Static muscle strength (Concluded)**

Downloaded from http://www.everyspec.com on 2010-01-26T2:50:27.

ILLUSTRATION	TYPE OF HANDLE	DIMENSIONS IN mm (in inches)								
		(Bare Hand)			(Gloved Hand)			(Mittened Hand)		
		X	Y	Z	X	Y	Z	X	Y	Z
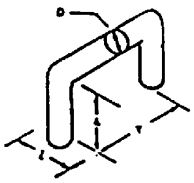	Two-finger bar	32 (1.25)	65 (2.5)	75 (3)	38 (1.5)	75 (3)	75 (3)	Not Applicable		
	One-hand bar	48 (1.875)	111 (4.375)	75 (3)	50 (2)	125 (5)	100 (4)	75 (3)	135 (5.25)	150 (6)
	Two-hand bar	48 (1.875)	215 (8.5)	75 (3)	50 (2)	270 (10.5)	100 (4)	75 (3)	280 (11)	150 (6)
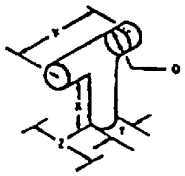	T-bar	38 (1.5)	100 (4)	75 (3)	50 (2)	115 (4.5)	100 (4)	Not Applicable		
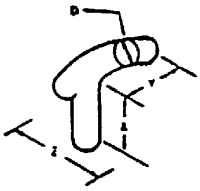	J-bar	50 (2)	100 (4)	75 (3)	50 (2)	115 (4.5)	100 (4)	75 (3)	125 (5)	150 (6)
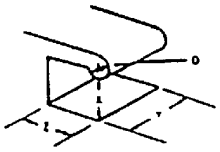	Two-finger recess	32 (1.25)	65 (2.5)	50 (2)	38 (1.5)	75 (3)	50 (2)	Not Applicable		
	One-hand recess	50 (2)	110 (4.25)	90 (3.5)	90 (3.5)	135 (5.25)	100 (4)	90 (3.5)	135 (5.25)	125 (5)
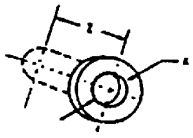	Finger-tip recess	19 (0.75)	–	13 (0.5)	25 (1)	–	19 (0.75)	Not Applicable		
	One-finger recess	32 (1.25)	–	50 (2)	38 (1.5)	–	50 (2)	Not Applicable		

Curvature of Handle or Edge	Weight of Item	Minimum Diameter	
(DOES NOT PRECLUDE USE OF OVAL HANDLES)	Up to 6.8 kg (up to 15 lbs)	D - 6 mm (0.25 in)	Gripping efficiency is best if finger can curl around handle or edge to any angle of $\frac{2}{3}\pi$ rad (120°) or more.
	6.8 to 9.0 kg (15 to 20 lbs)	D - 13 mm (0.5 in)	
	9.0 to 18 kg (20 to 40 lbs)	D - 19 mm (0.75 in)	
	Over 18 kg (over 40 lbs)	D - 25 mm (1 in)	
	T-bar Post	T—13mm (0.5 in)	

FIGURE 42. **Minimum handle dimensions**

Downloaded from http://www.everyspec.com on 2010-01-26T2:50:27.

5.9.12.4 Alignment. Items which must be precisely located or which incorporate rack and panel connectors shall use guide pins or their equivalent to assist in alignment during mounting.

5.9.12.5 Labeling and Coding. Where an item can be mounted and oriented any way other than intended, proper mounting and orientation shall be indicated by labels or coding (e.g., color). Where required to expedite field repair, wire bundles of more than five wires shall be labeled and color-coded.

5.9.12.6 Rollout racks, slides or hinges. Items which must be pulled out of their installed positions shall be mounted on rollout racks, slides, or hinges. Rollout racks pulled to the fully extended position should not shift the center of gravity to the point where the rack or console becomes unstable. If this possibility exists, the console or rack shall be safely secured.

5.9.12.7 Limit stops. Limit stops shall be provided on racks and drawers that are required to be pulled out of their installed positions. Rollout racks and drawers shall be self-locking in the retracted and extended positions. The limit stop design shall permit convenient overriding of stops for rack or drawer removal.

5.9.12.8 Interlocks. Interlocks shall be provided to ensure disconnection of equipment that would otherwise be damaged by withdrawal of racks or drawers. Equipment design should obviate the need for interlocks.

5.9.12.9 Hinged mounting. Hinged items shall be provided with a brace or other means of support to hold equipment in the "out" position for maintenance if it is not free to rotate and remain in the "out" position without support.

5.9.12.10 Layout. Units shall be laid out so that a minimum of place-to-place movements will be required during checkout.

5.9.12.11 Covers or panels. The number of covers and panels that must be opened or removed to access a replaceable item shall be minimized.

5.9.13 Conductors.

5.9.13.1 Coding. Cables containing individually insulated conductors with a common sheath shall be coded every 30 cm (12 in).

5.9.13.2 Cable clamps. Unless wiring ducts or conduits are used, mechanically (not adhesively) mounted cable clamps shall be provided to ensure correct routing of electrical cables within and between equipment items to ensure that cables do not hinder or obstruct equipment maintenance and to facilitate the mating of cables with their associated equipment items, and to prevent chafing due to contact with adjacent structure. All clamps shall be visible when equipment is installed.

5.9.13.3 Length. Cables shall be long enough so that required checking of any functioning item can be accomplished in a convenient place. Extension cables shall be provided where this is not feasible. Cables shall permit checkout of each functioning item located in drawers or pullout racks without having to remove the item from its installed location.

5.9.13.4 Cable routing. Cable routing shall not obstruct visual or physical access to equipment for operation or maintenance.

5.9.13.5 Access. Cables shall be routed so as to be accessible for inspection and maintenance.

Downloaded from http://www.everyspec.com on 2010-01-26T2:50:27.

5.9.13.6 Susceptibility to abuse. Cables shall be routed or protected to preclude mechanical damage and abuse, including damage by doors, lids, use as steps or hand holds, or being bent or twisted sharply or repeatedly.

5.9.13.7 Identification. Cables shall be labeled to indicate the equipment to which they belong and the connectors with which they mate.

5.9.14 Connectors.

5.9.14.1 Use of quick disconnect plugs. Plugs requiring no more than one turn, or other quick-disconnect plugs, shall be provided whenever feasible.

5.9.14.2 Keying. Connector design shall prevent a plug from being inserted into an incorrect receptacle and preclude damage to the plug or receptacle resulting from such an attempted insertion.

5.9.14.3 Identification. Electrical plugs and receptacles shall also be identified by color, shape, size, or equivalent means to facilitate identification when multiple, similar connectors are used in proximity to each other.

5.9.14.4 Alignment. Plugs and receptacles shall be provided with aligning pins, keyways, or equivalent devices to aid in alignment and to preclude inserting in other than the desired position. Aligning devices shall ensure that alignment is obtained before the electrical seals or pins engage.

5.9.14.5 Orientation. Plugs and receptacles shall be arranged so that the aligning devices are oriented in the same relative position.

5.9.14.6 Coding. Plugs and receptacles shall have durable strips, arrows, or other indications to show the positions of aligning pins or equivalent devices for proper insertion.

5.9.14.7 Spacing. Connectors shall be spaced far enough apart so that they can be grasped firmly for connecting and disconnecting. Space between adjacent connectors, or between a connector and any adjacent obstructions, shall be compatible with the size and shape of the plugs, and the type of clothing worn by the maintainer (e.g., cold weather handwear, NBC gloves). For bare finger operation, space between adjacent connectors shall be not less than 25 mm (1 in), except where connectors are to be sequentially removed and replaced and 25 mm (1 in) clearance is provided in a swept area of not less than 270° around each connector at the start of its removal/replacement sequence. Space between adjacent connectors shall be not less than 32 mm (1.25 in) if the connector is to be operated with gloved fingers, 64 mm (2.5 in) if the connector must be gripped firmly, and 75 mm (3 in) if the connector is operated with mittened hands. Spacing shall be measured from the outermost portion of the connector, i.e., from the backshell, strain relief clamp, dust cover or EMI/RFI shield. Where high torque is required to tighten or loosen the connector, space shall be provided for use of a connector wrench.

5.9.14.8 Testing and servicing. The rear of plug connectors shall be accessible for testing and servicing, except where precluded by potting, sealing, or other requirements.

5.9.14.9 Drawer modules. Where feasible, removable drawer modules shall be provided with connectors mounted on the back of the drawer to mate with connectors in the cabinet to accomplish electrical interconnection between the drawer, other equipment in the rack, and external connectors. Guide pins or equivalent devices shall be provided to aid in connector alignment and mating.

5.9.14.10 Electronic modules. Replacement electronic items (e.g., modules and high-failure-rate components) should be provided with simple plug-in, rack-and-panel type connectors.

Downloaded from http://www.everyspec.com on 2010-01-26T2:50:27.

5.9.14.11 Disassembly and adapters. Disassembly of connectors to change pin connections should be performed without special tools. When adapters are required, they shall be capable of being hand-tightened.

5.9.14.12 Protective covers. If protective covers are required, captive types shall be used.

5.9.15 Test points.

5.9.15.1 Adjustment. Test points used for adjustment shall be located sufficiently close to the controls and displays used in the adjustment so that maintainer place-to-place movement is not required during the adjustment process. Test points for adjustment shall be physically and visually accessible in the installed condition by the maintainer without removing other items.

5.9.15.2 Troubleshooting. Troubleshooting shall not require removal of subassemblies from assemblies.

5.9.15.3 Labeling. Test points should be permanently labeled with its identification and the within-tolerance range to be measured.

5.9.16 Test equipment.

5.9.16.1 Storage. Adequate storage space shall be provided within portable test equipment, its handling case, or lid to contain leads, probes, spares, manuals, and special tools, as required for operation.

5.9.16.2 Instructions. Instructions for operating portable test equipment shall be provided on the face of the test equipment, in a lid, in a special compartment, or on an electronic display interface. Instructions shall be directly readable while test equipment is being operated. Periodic calibration records, including tolerance check values, shall be placarded on the equipment where appropriate. Where applicable, the instructions shall include a reminder to calibrate the equipment and calibration procedures. Calibration procedures and data may be displayed on electronic display screens of equipment so equipped.

5.9.17 Failure indications and fuse requirements.

5.9.17.1 Indication of equipment failure.

5.9.17.1.1 Power failure. An indication shall be provided to reveal when power failure occurs (see 5.2.2.1.4).

5.9.17.1.2 Out-of-tolerance. A display shall be provided to indicate when an equipment item has failed or is not operating within tolerance limits. All mission essential electronic equipment shall incorporate an automatic self-check diagnostic at start up and at the request of the operator.

5.9.17.1.3 Critical malfunctions. If equipment is not regularly monitored, an audio alarm shall be provided to indicate malfunctions or conditions that would cause personnel injury or equipment damage. If an audio alarm would compromise covert operation of equipment, a visible alert shall be displayed.

5.9.17.2 Fuses and circuit breakers.

5.9.17.2.1 General. A positive indication shall be provided to reveal that a fuse or circuit breaker has opened a circuit.

Downloaded from http://www.everyspec.com on 2010-01-26T2:50:27.

5.9.17.2.2 Replacement and resetting. Fuses shall be readily accessible for removal and replacement. No other components shall require removal in order to gain access to fuses. No special tools shall be required for fuse replacement unless required by safety considerations. When resetting of circuit breakers is permissible, and is required for system operation during a mission, the breakers shall be located within reach of crew members in their normal operating posture.

5.9.17.2.3 Markings. Equipment served by the fuse or circuit breaker shall be identified in accordance with section 5.5. Labeling of fuses and circuit breakers shall be legible in the anticipated ambient illumination range for the operator's location.

5.9.17.2.4 Circuit breaker controls. Toggle bat and legend switch actuated circuit breakers may be used to control electrical power. Push-pull type breakers shall not be used as power switches.

5.9.17.2.5 Circuit breaker dimensions and separations. Dimensions and separation for toggle bat actuated breakers should comply with Figure 14. Legend switch actuated breakers should comply with the dimension and separation criteria shown in Figure 15.

5.9.18 Printed circuit boards. Printed circuit boards shall be designed and mounted for ease of removal and replacement, considering such factors as finger access, gripping aids and resistance created by the mounting device. Appropriate feedback shall be provided to ensure that the technician knows when the board is securely connected.

Downloaded from http://www.everyspec.com on 2010-01-26T2:50:27.

5.10 Design of equipment for remote handling.

5.10.1 Characteristics of equipment to be handled remotely.

5.10.1.1 Alignment. Self-alignment devices shall be provided for components which must be joined remotely.

5.10.1.2 Disconnect. Quick-disconnect devices shall be provided for items that must be disconnected remotely.

5.10.1.3 Fasteners. Fasteners shall be captive and readily replaceable by remote-handling techniques.

5.10.1.4. Lock and latching mechanisms. Each lock or latching mechanism shall be operable from a single point, have a positive catch, and provide a clear visual indication of the latch position.

5.10.2 Feedback. Feedback shall be provided from remote work areas to the operator of the remote-handling system. Visual information shall be regarded as most critical, followed, in order, by kinesthetic, tactual, and auditory feedback. Warning indicators should be presented wherever the operator needs to see or hear them.

5.10.3 Manipulators.

5.10.3.1 Safety. Power manipulators shall be provided with positive stops to prevent accidents.

5.10.3.2 Characteristics. For tasks requiring manipulative dexterity and load capacities of less than 10 kg (22 lb), manipulators with the following characteristics should be provided:

a. Position control (i.e., zero-order control in which the operator's control output directly determines the machine output).

b. Mutual force reflection between control and effector.

c. Seven degrees of freedom in motion and force control (i.e., three for translation, three for rotation, and one for gripping).

5.10.3.3 Power assist. For tasks involving gross positioning of loads heavier than 10 kg (22 lb), electrically or hydraulically powered manipulators with rate control should be provided (i.e., the operator's control output should directly determine the rate of change of the machine output).

5.10.4 Viewing equipment.

5.10.4.1 General. A viewing system shall be provided which gives the operator of a remote manipulator adequate information with respect to the three spatial coordinates of the workspace (i.e., X, Y, and Z).

5.10.4.2 Direct viewing. When permitted by shielding requirements, provision shall be made for the operator to view the work directly through shielding windows.

5.10.4.3 Viewing angle. In order to avoid distortion, requirements for direct viewing of objects near the viewing window or at line-of-sight angles greater than 60° should be avoided.

Downloaded from http://www.everyspec.com on 2010-01-26T2:50:27.

5.10.4.4 Indirect viewing. Indirect viewing systems (e.g., closed circuit television systems, periscopes, and microscopes) shall be provided to supplement direct viewing, where required by specific remote-handling situations.

5.10.4.5 Coding. For television viewing, symbol-or pattern-coding should be used in preference to color-coding.

5.10.4.6 Lettering. Letters, numbers, and important details that must be viewed by television shall be light against a dark background. Glazed or reflecting surfaces shall be avoided.

5.10.4.7 Stereo viewing. The two images produced by a stereoscopic periscope shall not differ more than 2% in magnification or 0.50 prism diopter in vertical imbalance. Horizontal imbalance shall be not greater than 0.50 prism diopter so as not to be fatiguing. Light transmittance of the two optical paths should be within 10% of each other.

5.10.5 Illumination.

5.10.5.1 Reflected light. Unless otherwise specified by the procuring activity, reflected light from remote work areas, as measured at the operator's work station (in direct viewing), shall conform to the requirements of this standard.

5.10.5.2 Threshold viewing. Monochromatic lighting should be provided when viewing conditions are near threshold, when high magnification powers are required, or when the operator is required to view the work at high angles of incidence through refractive materials.

Downloaded from http://www.everyspec.com on 2010-01-26T2:50:27.

5.11 Small systems and equipment.

5.11.1 Portability and load carrying. Individual portions of equipment shall be designed so that, when carried, the weight of the load will be distributed through as many muscle groups as possible. Pressure should be avoided or minimized on sensitive areas, including large blood vessels, nerves and areas lacking muscular padding. Design of load-carrying systems shall be compatible with the weight and distribution of individual items to be carried by the user. (The limits on weight of the items to be carried varies according to the climatic zone, mission to be performed, and occupational specialty. See MIL-HDBK-759 for weights of representative individual items that an infantry rifleman carries in temperate hot weather areas.) Load carrying systems shall be provided with a quick-release capability. In general, portable refers to an item that is carried a distance of not more than 2 km (1.24 miles). For items to be carried up to 10 meters (33 ft.), see 5.9.11.3.5 - 5.9.11.3.7.

5.11.1.1 Portability.

5.11.1.1.1 Weight. Individual portions of equipment may weigh up to 16 kg (35 lb) if the load is balanced and is distributed over many muscle groups, and if it is not necessary for the individual carrying the load to maintain the pace of an infantry movement.

5.11.1.1.2 Lifting aids. When necessary, lifting aids shall be provided to permit a second person to assist the porter in placing the load on the body.

5.11.1.1.3 Configuration. The load should be designed to permit freedom of movement. The shape of the load should be free of sharp edges or projections that may be harmful to the porter or snag on undergrowth. The shape and weight of the load should not interfere with (a) the length of step, (b) movements of the head, (c) the ability to raise and lower the load when going over obstacles, (d) the ability to see where the feet are placed when walking, (e) the ability to squat, (f) regulation of body temperature, or (g) the maintenance of normal posture.

5.11.1.1.4 Carrying by two persons. Where the load is designed for carrying by two persons, a combination of stretcher type handles and shoulder support should be used, if feasible.

5.11.1.1.5 Standardization. Maximum use should be made of standard load carrying systems or components.

5.11.1.2 Transportability by personnel.

5.11.1.2.1 Weight. Individual portions of equipment should weigh as little as possible if the system is to be manually transported by an individual on foot while maintaining pace with an infantry movement.

5.11.1.2.2 Load carrying. The total load carried by an individual, including clothing, weapons and equipment for close combat operations, should not exceed 30% of body weight and, for marching, 45% of body weight. Where personnel with 5th percentile body weight must be accommodated, the total load for close combat operations should not exceed 18.5 kg (41 lb) and, for marching, 27.7 kg (61 lb).

5.11.1.2.3 Lifting aids. Units for which no back-packing aids are required shall be equipped with handles suitable for two-handed lifting and carrying. If handles are provided, they shall conform to 5.9.11.5.1, 5.9.11.5.3, and 5.9.11.5.5. One-person back-packed loads over 20 kg (44 lbs) shall be designed (and, if necessary, provided with lifting aids) to permit a second person to assist the porter in placing the load on the body.

Downloaded from http://www.everyspec.com on 2010-01-26T2:50:27.

5.11.1.2.4 Back-packing aids. Back-packing aids shall distribute the load over as many muscle groups as possible by means of buttock and hip supports in addition to padded shoulder straps. Back-packing aids shall bring the center of gravity of the load as close to the porter's spine at the waistline as possible without any part of the load contacting the body. Load-carrying design shall minimize pressure or compression to the chest or armpits and shall eliminate local strain by transmitting weight to the ground through bone. Aids shall not produce laterally unbalanced loads, interfere with normal head movements, limit squatting, interfere with walking or climbing over low obstacles, interfere with movements of the shoulder girdle, produce strain on the shoulder muscle, or interfere with regulation of body temperature.

5.11.1.2.5 Projections. Load design should minimize projections to prevent injury to personnel or entanglement in undergrowth. Covers or cases may be provided to meet this requirement, as specified by the procuring activity.

5.11.2 Tracking.

5.11.2.1 Gunner environment. Where applicable, obscuration, shock and vibration should be sufficiently minimized to permit resumption of tracking rapidly after firing.

5.11.2.2 Crank size and speed. The size of tracking cranks, where used, shall be a function of rotation speed required: within the parameters of Figure 11, crank speed should be 140 - 200 rpm and radius should be 55 - 115 mm (2.2 - 4.5 in). Smaller crank radii should be used for high rpm requirements and the converse.

5.11.2.3 Two-dimensional tracking. A single control (rather than separate controls for each dimension) should be used for two-dimensional tracking.

5.11.2.4 Supports. Where a joystick is used for tracking, a hand, wrist, or forearm support (as appropriate) should be provided.

5.11.2.5 Compatibility. Movement of the tracking control shall be compatible with expected or conventional control movements.

5.11.3 Optical instruments and related equipment.

5.11.3.1 General. This section pertains only to direct-view, visual optical systems.

5.11.3.2 Visual accommodation. Any adjustment of the eyes beyond normal functional ability shall not be required.

5.11.3.3 Viewing angle. Optical instruments shall be oriented so that they are presented to the operator at a comfortable viewing angle.

5.11.3.4 Magnification.

5.11.3.4.1 General. Instrument magnification shall be sufficiently high to permit performance of the required application (e.g., detection, recognition, identification, weapon laying).

5.11.3.4.2 Unstabilized, unsupported handheld sights. Because of hand tremors and body motion, magnification of unstabilized, unsupported, handheld rifle and pistol sights should be not more than 4 power; magnification of unstabilized, unsupported, handheld monoculars or binoculars should be not more than 8 power.

Downloaded from http://www.everyspec.com on 2010-01-26T2:50:27.

5.11.3.4.3 Multiple magnification requirements. If more than one magnification is required, two or more discrete magnifications should be provided for optimum image quality and boresight integrity. Varifocal (zoom) systems should be considered for use only in systems where sighting accuracy is relatively unimportant and it results in overall simplification.

5.11.3.5 Entrance pupil. The entrance pupil shall be equal to the product of the magnification and the exit pupil diameter and, therefore, defined by these parameters.

5.11.3.6 Exit pupil.

5.11.3.6.1 General. The diameter of the exit pupil should be consistent with intended use and size/weight limitations.

5.11.3.6.2 Daylight. For daylight application the exit pupil diameter should not be less than 3 mm (0.12 in).

5.11.3.6.3 Low light levels. For maximizing performance at twilight and lower light levels, the exit pupil should be not less than 7 mm (0.28 in).

5.11.3.7 Eye relief. A long eye relief, e.g. 25 mm (1 in), should be provided for vehicular mounted sights if the observer must be protected from gun recoil, observe on the move, or maintain some field-of-view while wearing a protective mask. To permit use by observers wearing glasses when recoil is not encountered, eye relief shall be not less than 15 mm (0.6 in).

5.11.3.8 Eyepiece adjustments.

5.11.3.8.1 4-power and less. Fixed focus eyepieces set between -0.50 and -1.00 diopter may be used for instruments 4-power and less.

5.11.3.8.2 Over 4-power. Eyepiece dioptric (focusing) adjustments (-4 to +2 diopters required, -6 to +2 diopters desired) shall be provided and marked in 0.5 diopter increments on all instruments over 4-power magnification.

5.11.3.9 Optical quality.

5.11.3.9.1 Axial resolution. Axial resolution shall be equal to or better than 300 microradians (1 min) divided by the magnification to provide an eye-limited instrument.

5.11.3.9.2 Luminous transmission. Luminous transmission should be as high as possible, preferably greater than 50%.

5.11.3.10 Non-illuminated sights and reticles.

5.11.3.10.1 Line thickness. Reticle lines shall be thin enough so as not to obscure targets, but thick enough to be easily seen. Reticle lines should subtend not less than 600 microradians (2 min) at the eye.

5.11.3.10.2 Patterns. Reticle patterns should be as simple as possible and restricted to one main mission (e.g., major weapon ballistic scales) per reticle glass. Additional patterns should be on separate reticle glasses if added complexity is warranted for the particular application.

5.11.3.10.3 Format. Line reticles should be used in preference to reticles containing one, two, or three central spots. A small cross or very small circle should be used in preference to a dot.

Downloaded from http://www.everyspec.com on 2010-01-26T2:50:27.

5.11.3.10.4 Parallax. The reticle should be focused to the target range of primary interest to limit the parallax to an acceptable value throughout the usable range.

5.11.3.11 Illuminated sights and reticles.

5.11.3.11.1 Night operations. Illuminated reticles shall be provided for sights to be used during twilight or night operations.

5.11.3.11.2 Color. Blue shall not be used as the color of illumination for reticles or sights.

5.11.3.11.3 Dimming. Sight luminance shall be continuously adjustable until it is extinguished.

5.11.3.11.4 Uniformity. Sights shall be evenly illuminated by means of an opal diffuser or similar device.

5.11.3.11.5 Reticle lines. The thickness of reticle lines for illuminated sights should be not less than 150 microradians (0.5 min) visual angle. They shall be thin enough so as not to obscure targets, but thick enough to be easily seen. In any case, their thickness should not exceed 600 miocroradians (2 min).

5.11.3.11.6 Night vision goggle (NVG) accommodation. If potential operator conditions include NVG use, spectral output wavelength should be not greater than 600 nm.

5.11.3.12 Binoculars/bioculars.

5.11.3.12.1 Biocular viewing. Where continuous use of a sight under low levels of illumination will exceed one minute, the single optical train shall be provided with two eyepieces if this does not lead to unacceptable light losses.

5.11.3.12.2 Eyepiece separation. Binocular/biocular instruments should have an eyepiece separation scaled from 50 to 75 mm (2-3 in) with 1 mm (0.04 in) interval markings.

5.11.3.12.3 Magnification differences. Magnification differences of the two barrels should not exceed 2%.

5.11.3.12.4 Luminous transmission differences. Luminous transmission differences of the two barrels should not exceed 5%.

5.11.3.12.5 Matched oculars. To avoid size differences in the images presented to the two eyes (that may induce eyestrain or headache), oculars shall be matched in focal length, i.e., shall be matched pairs.

5.11.3.12.6 Weight. The weight of handheld binoculars/bioculars shall be not greater than 1.5 kg (3.3 pounds) and should be not greater than 1 kg (2.2 pounds).

5.11.3.13 Eyecups and headrests. Any optical instrument requiring steady orientation of the eyes shall be provided with a headrest or eyecups, or both.

5.11.3.13.1 Eyecups. Eyecups shall be provided to maintain proper eye relief, eliminate stray light and, when required, protect or cushion the eyes and orbital region against impact with the eyepieces. The radii of Figure 43 define a surface of revolution within which a satisfactory symmetrical eyepiece and cup must be designed if interferences with facial features are to be avoided. These should be applied to cushion forms when they are compressed to the maximum.

Downloaded from http://www.everyspec.com on 2010-01-26T2:50:27.

A – SUPERCILIARY ARCH REQUIREMENT ---------- 17 mm (0.74”)
B – NASAL BONE REQUIREMENT ---------- 22 mm (0.875”)
C – GREATER ALAR CARTILAGE REQUIREMENT ----------32 mm (1.25”)
D – SEPTAL CARTILAGE REQUIREMENT ---------- 44 mm (1.75”)

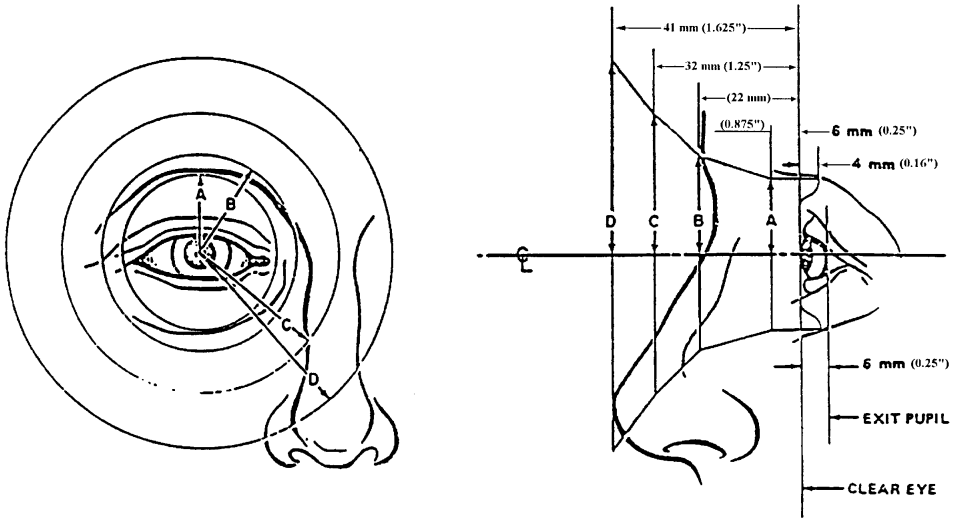

FIGURE 43. **Anatomical limits on axially symmetrical ocular metal parts**

5.11.3.13.2 Headrests/brow pads. A headrest or brow pad shall be used to absorb energy which would be injurious to the operator's head.

5.11.3.13.3 Compatibility with clothing and personal equipment. Eyecups and headrests shall be compatible with helmets, protective masks, and other clothing and personal equipment.

5.11.3.14 Accessories.

5.11.3.14.1 Filters.

5.11.3.14.1.1 General. Light filters, removable from the optical path, should be provided to reduce glare or light intensity, or protect the observer's eyes against hazardous light levels. Where applicable, provisions should be made for filter stowage.

5.11.3.14.1.2 Use. Use of color or neutral density filters will depend upon the application (e.g., neutral filters may be used to reduce overall brightness without affecting contrast; polarizing filters may be used to reduce unacceptable glare or increase apparent contrast from sun, snow, or water).

5.11.3.14.2 Shutters. Shutters having closure and reopening times appropriate for each application may be provided in lieu of fixed filters to protect the observer exposed to flashes from weapon systems, lasers, or other bright light sources. Shutters for protection from the observer's own weapon system flash, which may be actuated just before the weapon is fired, shall not disturb the lay of the weapon before closing, nor unnecessarily impede the observation of the projectile flight path or resultant impact.

Downloaded from http://www.everyspec.com on 2010-01-26T2:50:27.

5.11.3.14.3 Positioning aids. Level vials, scales, pointers and other devices required for positioning the instrument shall be readily visible and protected from damage or displacement.

5.11.3.15 Environmental conditions. Carrying/transport cases should be provided for instruments to be hand-carried or mounted/dismounted separately. Instruments to be used under severe environmental conditions should be compatible with the special clothing, headgear, protective masks or other ancillary equipment required by the operator that may affect controls, eyepieces, eyecups, headrests, and other operator interfaces.

5.11.3.16 Lighting. Means shall be provided for illumination of internal and external scales, level vials, and other instruments that must be read under low light level conditions. Continuously variable control of illumination shall be provided as required by weapon system characteristics. Illumination to be used under low light level conditions shall minimally affect the dark adaptation of the observer. Where dark adaptation must be maintained, illumination with wavelengths not less than 600 nm shall be used.

5.11.3.17 Maintenance.

5.11.3.17.1 Modular design. When practical, optical equipment should configured as modules to provide for interchangeability of optical subassemblies.

5.11.3.17.2 Positioning aids. Built-in aligning devices and other aids should be used wherever possible for ease of positioning optical assemblies within an instrument or optical modules that have multiple applications in equipment.

5.11.3.17.3 Quick release. Where practical, quick-release methods of removing optical instruments should be used.

5.11.3.17.4 Collimation. Optical instruments should be provided with built-in collimation features to allow field adjustment.

5.11.3.17.5 Purging and charging. Where periodic purging and charging of optical instruments are required, an instruction plate, that indicates time interval and pressure requirements shall be provided on the instrument. Purging and charging fittings shall be accessible for required maintenance.

5.11.3.17.6 Component replacement. Internal components such as light bulbs that require frequent replacement, checkout, or maintenance should be easily accessible, removable without special tools, and replaceable without removal or disassembly or other components. Components that require frequent replacement and frequently used special tools and equipment shall be readily accessible. Provision should be made for storage of such components and tools in or on the specific equipment. This particularly applies to items such as light bulbs whose failure could make the instrument inoperable.

5.11.3.17.7 Boresighting.

5.11.3.17.7.1 Positive locks. Boresight knobs shall be provided with a positive lock. (The boresighting settings shall not change during the locking process.)

Downloaded from http://www.everyspec.com on 2010-01-26T2:50:27.

5.11.3.17.7.2 Lock-unlock resistance. Boresight knob locks shall require not greater than 45 N (10 lb) of force to lock and unlock.

5.11.3.17.7.3 Adjustment operation. Boresight adjustment knobs should be capable of being locked, unlocked, and adjusted by suitably clothed and equipped users with hand dimensions varying between the 5th and 95th percentiles.

Downloaded from http://www.everyspec.com on 2010-01-26T2:50:27.

5.12 Operational and maintenance ground/shipboard vehicles.

5.12.1 General. Handles, levers, pedals, knobs, and workspace dimensions shall be designed to enhance effective vehicle operation by suitably clothed and equipped users with relevant body dimensions varying between 5th and 95th percentiles. (See 5.6.1.)

5.12.2 Seating.

5.12.2.1 Dimensions and clearances. Vehicle operator seating dimensions and clearances should conform to those in Figures 44 and 45 and Table XX as applicable.

5.12.2.2 Vertical adjustment. Vertical adjustment of a seat to a higher position should also increase leg room and footrest angle.

5.12.2.3 Horizontal adjustment. Seats shall adjust at least 15 cm (6 in) in the fore-aft direction.

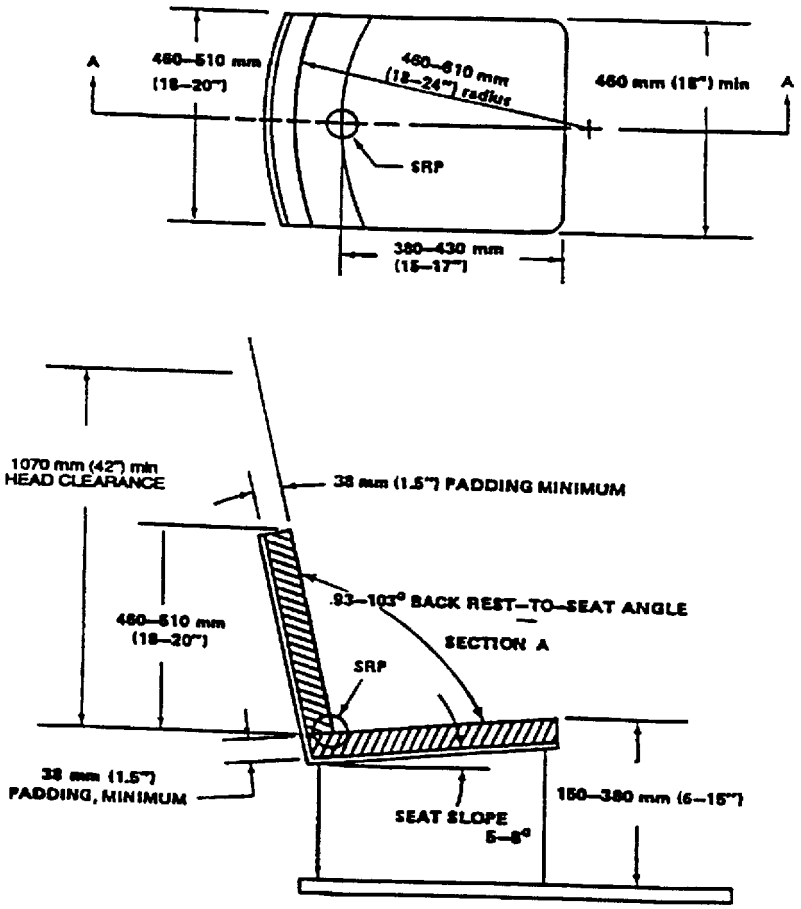

FIGURE 44. **Dimensions for vehicle operator's seat**

Downloaded from http://www.everyspec.com on 2010-01-26T2:50:27.

TABLE XX. **Recommended clearances around equipment operator's station to accommodate the 95th percentile soldier dressed in Arctic clothing. Operator seat in rear most position (Figure 45)**

A. Elbow (dynamic)	91 cm (36 in)
B. Elbow (static)	71 cm (28 in)
C. Shoulder	58 cm (23 in)
D. Knee width (minimum)	46 cm (18 in)
E. Knee width (optimum)	61 cm (24 in)
F. Boot (provide adequate clearance to operate brake pedal without inadvertent acceleration operation)	15 cm (6 in)
G. Pedals (minimum)	5 cm (2 in)
H. Boot (provide adequate clearance to operate accelerator without interference by brake pedal)	15 cm (6 in)
1. Head (seat reference point (SRP) to roof line)	107 cm (42 in)
2. Abdominal (seat back to steering wheel)	41 cm (16 in)
3. Front of knee (seat back to manual controls on dash)	74 cm (29 in)
4. Seat depth (seat reference point to front edge of seat pan)	41 cm (16 in)
5. Thigh (under side of steering wheel to seat pan)	24 cm (9.5 in)
6. Seat pan height	38 cm (15 in)
7. Boot (front of seat pan to heel point of accelerator)	36 cm (14 in)
8. Minimum mitten clearance around steering wheel	8 cm (3 in)
9. Knee–leg–thigh (brake/clutch pedals to lower edge of steering wheel)	66 cm (26 in)

5.12.2.4 Back-rest angle. Back-rest angle should be not more than 110° from horizontal. If only the lumbar area is supported, the back-rest angle of tilt should be 95 - 100° for erect operators .

5.12.2.5 Seat padding. Seat padding should be resilient enough to keep the operator's body from contacting the seat bottom during severe vibration. Seat padding made of foam-type material should be adequately ventilated. Padding shall be designed to support adequate blood flow to and from the legs, absence of "pinching off" (by weight or pressure) of nerves and protection from bruising.

5.12.2.6 Seat belts. All administrative type vehicles shall have safety seat belts. Seat belts should be installed on other type vehicles except when they interfere with operational requirements.

5.12.3 Controls.

5.12.3.1 Dynamic effects. Control use shall not be adversely affected by distortion, shock, or vibration of the vehicle.

5.12.3.2 Steering. In case of power steering assist failure, the steering gear shall afford the operator sufficient mechanical advantage to guide the vehicle during an emergency stop or during low-speed operation (See Table IX for quantitative data.)

5.12.3.3 Pedals. Foot pedals shall accept the weight of the operator's foot without initiating control action.

Downloaded from http://www.everyspec.com on 2010-01-26T2:50:27.

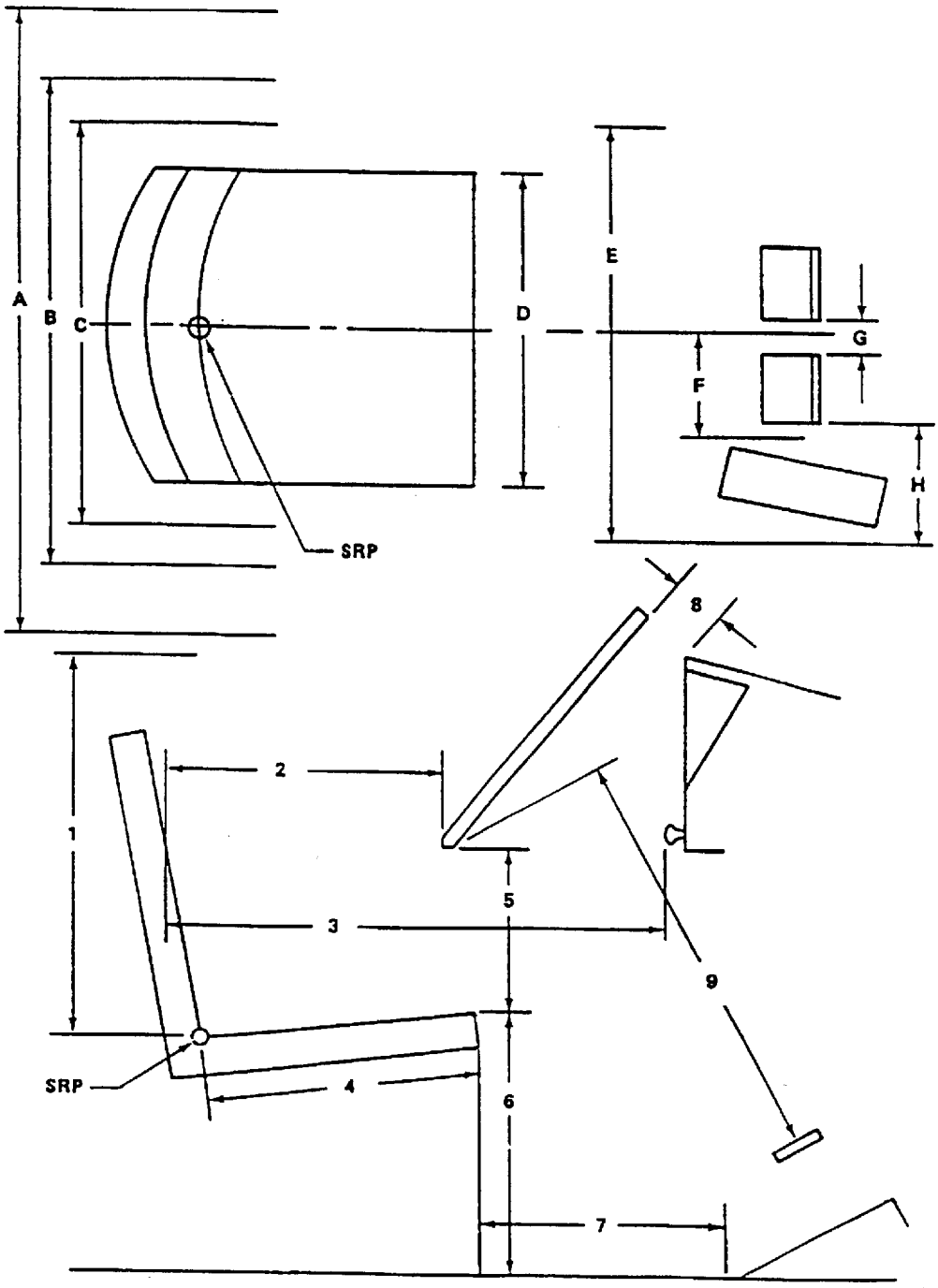

FIGURE 45. **Recommended clearances around equipment**

Downloaded from http://www.everyspec.com on 2010-01-26T2:50:27.

5.12.3.4 Control of hazardous operations. The operation of switches or controls which initiate hazardous operations shall require the prior operation of a locking control.

5.12.4 Operating instructions.

5.12.4.1 Provision of operating instruction. Operating instructions shall be provided for all vehicles and vehicle equipment, except where the operation will be obvious to all potential operators.

5.12.4.2 Format. Information shall be presented in the form of diagrams whenever possible.

5.12.4.3 Speed notice. Maximum permissible road speeds in each gear and range shall be indicated. On vehicles for which all road speeds are limited by engine speed, a red line at the maximum engine RPM on the tachometer (if so equipped) may be used in lieu of a speed placard.

5.12.4.4 Shift handle positions. Operating positions of shift handles (such as those on transmission, power take-off, winch-control, and transfer case mechanisms) shall be illustrated.

5.12.4.5 Control movements. Control movements should be shown in planes parallel to the movement of the actual controls.

5.12.4.6. General labeling criteria. Identification and instruction markings shall conform 5.5, as applicable.

5.12.5 Visibility.

5.12.5.1 Visual field. The operator shall have forward visibility through a lateral visual field of at least 180° and preferably 220°.

5.12.5.2 Ground view. Truck design should enable the operator, in the normal operating position, to view the ground at all distances beyond 3 m (10 ft) in front of the vehicle. When necessary, mirrors may be used to meet this requirement, if tactical requirements permit. Upward visibility shall extend to not less than 15° above the horizontal.

5.12.5.3 Rear view (vehicle). Side and rear enclosures should be designed to permit the operator to view the rear of the vehicle (directly or by use of mirrors) in order to observe the load and to facilitate trailer attachment and backing maneuvers.

5.12.5.4 Rear view (road). A glare-proof, west-coast type and spotter-rearview mirror shall be provided on each side of the cab, located in such a manner as to afford the operator rearward vision from the normal operating position.

5.12.5.5 Glare. Visors or other means should be used to preclude performance degradation due to glare from external sources such as sunlight or headlights; however, windshields or other transparent areas through which high acuity vision is required shall not be tinted or colored.

5.12.5.6 Windshields and windows. Transparent materials selected for windshields and windows shall be shatter-proof and shall neither distort nor obscure vision.

5.12.5.7 Windshield wipers and washers. Windshield wipers and washers shall be provided. Blades shall return to the stored position when turned off. Provision shall be made for manual operation in event of power failure.

Downloaded from http://www.everyspec.com on 2010-01-26T2:50:27.

5.12.5.8 Fork lifts. The configuration of fork lift mechanisms and fork lift truck cabs shall permit the operator to have direct view of the tips of the forks in all typical modes of material loading and in all likely operator positions.

5.12.5.9 Night operation. Indicators required by the vehicle operator during night operation shall be illuminated. The display luminance shall be adjustable from 0.1 to 3.5 cd/m^2 (0.03 to 1.0 footlamberts). Blackout lighting systems, if required, shall be designed to preclude accidental operation of external lights and signals.

5.12.5.10 Lighting for dark adaptation. When light security is not a consideration and dark adaptation is required, low level white lighting (achromatic lighting with an intensity not greater than that of red/blue illumination) should be used.

5.12.6 Heating and ventilation.

5.12.6.1 Heating. The crew compartment shall be provided with a heating system capable of maintaining temperatures above 20°C (68°F) during occupancy when personnel are not wearing Arctic clothing and exposure exceeds 3 hours. When Arctic clothing is worn, cab heaters shall be capable of maintaining a reference temperature of not less than 5°C (41°F) at the minimum ambient design temperature with the vehicle moving at two-thirds maximum speed and the defrosters operating at maximum capacity. The reference temperature is measured 61 cm (24") above the seat reference point of each operator/passenger position. Air temperatures around any part of the operator/passenger's body shall not vary more than ±5°C (±9°F). The heater shall achieve these requirements within one hour after it is turned on.

5.12.6.2 Ventilation. Outside fresh air shall be supplied at minimum rate of 0.57 m^3 (20 ft^3)/min/person. Air flow rates for hot-climate operation (temperatures above 32°C (90°F)) shall be maintained between 4.2 and 5.7 m^3 (150 and 200 ft^3)/min./person, unless air conditioning or individual (microclimate) cooling is provided. Air velocity at each person's head location shall be adjustable either continuously or with not less than three settings (OFF, LOW and HIGH) from near zero to at least 120 m (400 ft)/minute.

5.12.6.3 Visibility. The heating-ventilating system shall be designed to minimize degradation of visibility due to frosting or misting of the windshield.

5.12.6.4 Air conditioning. If a vehicle mission profile requires personnel to occupy a vehicle cabin for a period exceeding 30 minutes in climatic (ambient) conditions greater than +24°C (75°F), then the provisions of 5.8.1.3 through 5.8.1.8 shall apply.

5.12.7 Trailers, vans, and intervehicular connections.

5.12.7.1 Trailers.

5.12.7.1.1 Brake controls. Trailer brake controls shall be located so that an operator can reach them while restraining or positioning the trailer manually. The controls shall not be located on the side of the trailer exposed to road traffic.

5.12.7.1.2 Positioning controls. Component trailers should contain precise positioning controls when the trailer will be used to mate parts.

5.12.7.1.3 Tie downs. Munitions tie-down facilities on stores trailers shall be easily installed and removed.

Downloaded from http://www.everyspec.com on 2010-01-26T2:50:27.

5.12.7.1.4 Landing gear lock. Landing gear lock and release shall be capable of being hand- or foot-operated.

5.12.7.2 Vans. The following criteria applies to trailer vans and transportable enclosures which serve as shelters for personnel or equipment, and which require occupancy by personnel for operational or maintenance tasks in excess of one hour, on a recurring basis where mission requirements permit.

5.12.7.2.1 Ceiling height. The ceiling height (distance from the floor to the bottom of any light, cable run, or other protuberance over the aisle or standing work space (shall be not less than 198 cm (78 in)) for vans and shelters, except as follows: when the occupants seldom stand to perform normal operations, the ceiling height can be reduced to 189 cm (74.5 in) unless otherwise specified by the procuring activity.

5.12.7.2.2 Access openings. Personnel access openings shall be not less than 193 cm (76 in) high and 76 cm (30 in) wide. Equipment access opening shall accommodate the specific equipment to be transported, including suitable clearances for handling. Access doors shall have provisions for being locked in open positions as well as closed positions. All access doors shall have inner quick-opening releases.

5.12.7.2.3 Steps, stairs, ladders. Steps, stairs, or ladders shall be provided when van floors are more than 46 cm (18 in) above ground level. See related guidance in 5.7.6.

5.12.7.2.4 Inclinometers. On work spaces such as large personnel-occupied vans or shelters, intended for use as mobile work spaces, inclinometers shall be provided to permit readout of front-rear and side-side tilt within ± 2°.

5.12.8 Cranes, materials handling and construction.

5.12.8.1 General. The positioning of equipment and loads shall be facilitated through use of center-of-gravity identification, matching guidelines, identification of attaching points, detachable probes, and similar measures. Latches on control levers shall not cause delay in operation.

5.12.8.2 Control labels. All controls used with lifting equipment shall be labeled as to function and direction of movement.

5.12.8.3 Control placement. Controls shall be within easy reach of the operator and shall afford optimum visibility of the load at all times.

5.12.8.4 Foot-operated controls. Foot-operated controls shall not be selected for precise adjustments or movements. Foot-operated brake pedals that require locking shall lock by foot action alone. For ease of operation, the pedals shall rise from the depressed position in a backward as well as vertical movement.

5.12.8.5 Load capacity. The load capacity shall be indicated on the equipment, and audible warning devices shall be provided where necessary to indicate that the allowable load has been exceeded.

5.12.8.6 Visibility. Maximum, unobstructed view of the work, including the point sheaves of the basic boom of a revolving crane at a 3 m (10 ft) radius shall be visible to suitably clothed and equipped users with relevant body dimensions varying between 5th and 95th percentiles.

Downloaded from http://www.everyspec.com on 2010-01-26T2:50:27.

5.12.8.7 Access. Where not otherwise specified herein, access dimensions for construction machinery shall conform to SAE J925, as applicable.

5.12.8.8 Handholds and footholds. Suitable handholds and footholds shall be provided to facilitate personnel access and movement.

5.12.9 Automotive subsystems.

5.12.9.1 General.

5.12.9.1.1 Drain valves. Vehicles shall be designed to require a minimum number of drain valves and drain sizes. Drain valves shall be readily accessible and hand-operable by the full range of user personnel wearing either Arctic or NBC garments. Drain valve handles shall be in line with the corresponding pipe when ON and perpendicular to the pipe when OFF.

5.12.9.1.2 Filters. Fuel and oil filters shall be located in accessible positions for inspection and replacement and shall not require the removal of other parts.

5.12.9.1.3 Adjustment and access. Components requiring adjustment or replacement, such as distributors, fuel injectors, and fan belts, shall be as accessible as possible. Timing marks and other adjustment indicators shall be designed to minimize parallax and shall be readily accessible for visual inspection. Drive belt tensioning devices shall permit access for tensioning without removal of other components and, if needed, furnished with pry points.

5.12.9.1.4 Battery terminals - Positive and negative battery terminals shall be of different sizes to prevent incorrect cable attachment. Terminals shall be appropriately labeled "+" or "-".

5.12.9.2 Tires.

5.12.9.2.1 Dual tires. The design of dual wheel arrangement shall allow both the inner and outer tires to be inflated and checked for air. The location of valves shall permit tires to be inflated and checked when the tires are interchanged.

5.12.9.2.2 Spare tires. The spare tire shall be capable of being inflated and checked when mounted in the stowed position.

5.12.9.3 Winches.

5.12.9.3.1 Instruction plates. Instruction plates describing winch operation shall be mounted in a conspicuous location for operator use.

5.12.9.3.2 Operation. Winch and vehicle power trains shall be capable of being operated simultaneously; the vehicle forward speed due to straight winch-line or snatch-block operation should match one of the vehicle power train speeds to facilitate simultaneous operation.

5.12.9.3.3 Cable unwinding. Winch cables shall be capable of being easily payed out by one crew member.

5.12.9.3.4 Control location. Winches shall be capable of being operated from both cab and winch locations and being observed by the operator during operation.

5.12.9.3.5 Clothing compatibility. Winch controls at the winch shall be capable of being operated by personnel wearing Arctic mittens.

Downloaded from http://www.everyspec.com on 2010-01-26T2:50:27.

5.13 Hazards and safety.

5.13.1 General. Design shall reflect the safety related human engineering criteria below as well as in other sections of this standard. The order of precedence for satisfying system safety requirements is as follows:

a. Design for minimum risk.

b. Incorporate safety devices

c. Provide warning devices.

d. Provide procedures and training

5.13.2 Warning labels and placards.

5.13.2.1 General. Conspicuous labels or placards shall be placed on, or adjacent to, any equipment that presents a hazard to personnel (e.g., high voltage, heat, toxic vapors, explosion, or radiation). These labels or placards shall describe the hazard and state appropriate precautions. Labels and placards should also describe the consequences of not complying with the stated warning. They shall

a. be readable from a safe distance,

b. be located so as to be apparent to operators, maintainers, and transient personnel,

c. create no additional distractions, and

d. not be hazardous themselves.

5.13.2.2 Center of gravity and weight. Where applicable, the center of gravity and the weight of equipment shall be distinctly marked.

5.13.2.3 Weight capacity. The weight capacity shall be indicated on stands, hoists, lifts, jacks, vehicles, and similar weight-bearing equipment, so as to prevent overloading.

5.13.2.4 Identification of protective items. Areas of operation or maintenance where special protective clothing, tools, or equipment are necessary (e.g., insulated shoes, gloves, suits) shall be specifically identified.

5.13.2.5 "NO-STEP" markings. "NO-STEP" markings shall be provided when necessary to prevent injury to personnel or damage to equipment.

5.13.2.6 Electrical labels. All receptacles shall be marked with their voltage, phase, and frequency characteristics, as appropriate. For other electrical labeling and warning requirements, see MIL-HDBK-454.

5.13.2.7 Hand grasp areas. Hand grasp areas shall be conspicuously and unambiguously identified on the equipment.

5.13.2.8 Visibility and illumination. Warning labels and placards shall be visible under all anticipated lighting conditions. If required, special illumination may be used to meet this criterion.

Downloaded from http://www.everyspec.com on 2010-01-26T2:50:27.

5.13.3 Pipe, hose and tube line identification. Pipe, hose, and tube lines for liquids, gas, steam, and etc., shall be clearly and unambiguously labeled or coded as to contents, pressure, heat, cold, or other specific hazardous properties.

5.13.4 General workspace hazards.

5.13.4.1 Alerting device. A hazard-alerting device shall be provided to warn personnel of impending danger or existing hazards (e.g., fire, the presence of combustible or asphyxiating gas, smoke, and radiation.).

5.13.4.2 Emergency doors and exits. Emergency doors and exits shall be clearly designated, readily accessible, unobstructed, simple to operate, simple to locate in the dark, quick opening in three seconds or less, and require 44 - 133 N (10 - 30 lb) of operating force to open. They shall not themselves, or in operation, constitute a safety hazard. They shall permit one person egress in 5 seconds or less.

5.13.4.3 Stairs. Stairs, including incline, step risers, and treads, shall conform with standard safe design practice. Skid-proof flooring, stair, and step treads shall be provided. Where conditions warrant special precaution, surfaces shall be treated with a nonslip coating.

5.13.4.4 Obstructions. Workspace around areas where maintenance is performed shall be free of obstructions which could cause injury to personnel, either through accidental contact with the obstruction or because the obstruction requires an awkward or dangerous body position.

5.13.4.5 Illumination. Adequate illumination shall be provided in all areas. Warning placards, stairways, and all hazardous areas shall be illuminated in accordance with the recommended levels of Table XVI.

5.13.4.6 Thermal contact hazards. Equipment which, in normal operation, exposes personnel to surface temperatures greater than those shown in table XXI or less than 0°C (32° F) shall be appropriately guarded. Surface temperatures induced by climatic environment are exempt from this requirement. Cryogenic systems shall also be appropriately guarded.

TABLE XXI. **Temperature exposure limits**

EXPOSURE	TEMPERATURE LIMITS		
	Metal	Glass	Plastic or wood
Momentary contact	60°C (140°F)	68°C (154°F)	85°C (185°F)
Prolonged contact or handling	49°C (120°F)	59°C (138°F)	69°C (156°F)

5.13.5 General equipment-related hazards.

5.13.5.1 Interlocks and alarms. The operation of switches or controls which initiate hazardous operations (e.g., ignition, movement of a crane) shall require the prior operation of a related or locking control. Where practicable, the critical position of such a control shall activate a visual and auditory warning device in the affected work area.

5.13.5.2 Access. Equipment items shall be so located and mounted that access to them can be achieved without danger to personnel from electrical, thermal, mechanical, chemical, radiological, or other hazards.

Downloaded from http://www.everyspec.com on 2010-01-26T2:50:27.

5.13.5.3 Hazardous access. Where access areas must be located over dangerous mechanical or electrical components, the access door or cover shall be designed to turn on an internal light when opened. A highly visible warning label shall be provided on the outside of the door or cover.

5.13.5.4 Edge rounding. Where applicable, all exposed edges and corners shall be rounded to a radius not less than 0.75 mm (.03 in). Sharp edges and corners that can present a personnel safety hazard or cause equipment damage during usage shall be suitably protected or rounded to a radius not less than 1.3 mm (.05 in).

5.13.5.5 Safety pins and streamers. Safety pins and streamers shall be clearly visible and accessible during ground maintenance.

5.13.5.6 Handholds/footholds. Handholds or footholds should be furnished where needed to assist personnel in climbing onto equipment or in performing intended tasks.

5.13.6 Platforms.

5.13.6.1 Locks. Self-locking or other fail-safe devices shall be incorporated on elevating stands, work platforms and "draw bridges" to prevent accidental or inadvertent collapsing or falling.

5.13.6.2 Handrails, safety bars and chains. Handrails, safety bars, or chains shall be installed around platforms and across stair or step openings in platforms, ledges, and catwalks. Such guards shall be placed 91 - 110 cm (36 - 43 in) above the standing surface. An intermediate guard rail shall be provided. Chains shall be used only where it is not feasible to install handrails or safety bars. Kickboards, 15 cm (6 in) high, shall be installed.

5.13.6.3 Safety mesh. Screen or safety mesh shall be installed on the underside of open gratings, platforms, or flooring surfaces where small tools, parts or debris may fall through the grating on workers or equipment beneath the platform.

5.13.6.4 High centers of gravity. Equipment that may tip over and injure personnel due to a high center of gravity should have anchors or outriggers for stability and shall display an appropriate warning.

5.13.7 Electrical, mechanical, fluid, toxic and radiation hazards.

5.13.7.1 Electrical hazards.

5.13.7.1.1 Insulation of tools. Tools and test leads to be used near high voltages shall be adequately insulated.

5.13.7.1.2 Plugs and receptacles. Plugs and receptacle configurations shall preclude inserting a plug of one voltage rating into a receptacle of another rating.

5.13.7.1.3 Voltage exposure. All hot contacts shall be socket contacts.

5.13.7.1.4 Dangerous voltage or current. Guards, grounding, interlocks, and warning placards shall be provided to minimize exposing personnel to dangerous voltages or currents.

5.13.7.1.5 Ground potential. Equipment shall be designed so that all external parts, other than antenna and transmission line terminals, will be at ground potential.

Downloaded from http://www.everyspec.com on 2010-01-26T2:50:27.

5.13.7.1.6 Electrically operated hand tools. Electrically operated hand-held power tools shall be designed with three-wire power cords with one wire at ground potential and shall have exposed surfaces which are either non-conducting or are electrically connected to the ground wire. Exposed surfaces include cases, grips, handles, switches, triggers, chucks, and other surfaces which are capable of being contacted during operation. Portable tools, protected by an approved system of double insulation or its equivalent, may be used without a ground wire when approved by the procuring activity.

5.13.7.1.7 Electronic equipment. See Guideline 1 of MIL-HDBK-454.

5.13.7.1.8 Vehicle batteries. Batteries that have ratings greater than 25 amp hours shall have terminal guarding to prevent inadvertent short-circuit. Such guarding shall also prevent short-circuiting the battery in spite of clearly improper but possible acts by personnel, such as placing tools across terminals, resting a heavy object on the battery cover, and standing on a battery cover.

5.13.7.1.9 Electrical conductors. Electrical conductors which maintainers might contact during maintenance activities shall be insulated.

5.13.7.1.10 Covers. Grounded or nonconductive protective covers shall be provided for all electrical equipment.

5.13.7.1.11 Non-bypassable interlocks. Doors, covers, or lids that provide access to voltages in excess of 500 volts or allow exposure to microwave and radio frequency radiation in excess of 300 KHz shall have non-bypassable interlocks.

5.13.7.1.12 Interlock override. If a task requires that a maintainer work on hazardous equipment that is equipped with a disabling interlock, the equipment shall have an interlock override that permits manual bypassing or overriding of the interlock when the case or cover is open. Any interlock override should automatically reset when the cover or case is replaced.

5.13.7.2 Mechanical hazards.

5.13.7.2.1 Guards. A guard shall be provided on all moving parts of machinery and transmission equipment, including pulleys, belts, gears, and blades, on which personnel may become injured or entangled.

5.13.7.2.2 Telescoping ladders. Adequate finger clearance shall be provided between rungs of telescoping ladders.

5.13.7.3 Fluid hazards.

5.13.7.3.1 Connectors. Each connector used in handling or controlling hazardous fluids, including propellants, solvents, toxic materials, hypergolics, and asphyxiants, shall be incompatible with other connectors within the access area of that connector.

5.13.7.3.2 Fluid and fuel servicing equipment. Automatic shutoff devices shall be provided on fluid and fuel service equipment to prevent overflow and spillage.

5.13.7.4 Toxic hazards.

5.13.7.4.1 General. Personnel shall not be exposed to the concentrations of toxic substances in excess of the limits specified in either the Department of Defense (DoD) Occupational Safety and Health (OSH) standards or specialized standards applicable to military unique equipment, systems or operations.

Downloaded from http://www.everyspec.com on 2010-01-26T2:50:27.

5.13.7.4.2 Carbon monoxide. Carbon monoxide (CO) in personnel areas shall be reduced to the lowest level feasible. Personnel shall not be exposed to concentrations of CO that will result in carboxyhemoglobin (COHb) levels in their blood greater than 5% for all system design objectives and aviation system performance limits and 10% for all other system performance limits. Such COHb blood levels may be estimated by solving the empirical equation in paragraph 5.13.7.4.5 of MIL-HDBK-759. When using the equations to estimate the percent COHb blood levels for combat vehicle occupants, the following work stress levels (defined by MIL-HDBK-759) shall be applied as appropriate: activities involving weapons fire: level 4; all other mission activities: level 3. An initial value of COHb = 1.0% shall be assumed for all estimates.

5.13.7.5 Radiation. The design of radiation-emitting systems and equipment shall minimize hazards to operators and maintenance personnel. If internal ionizing radiation hazards (e.g., breakage of a tritium-illuminated source in a fire-control device or rifle sight presents potential tritium ingestion by individuals in the area) cannot be eliminated, they shall be minimized through engineering design. Ionizing radiation exposure rates produced by any device shall not exceed 0.5 milliroentgens/hr at a distance of 5 cm (2 in) from any point on the external surface. Microwave, radio frequency, X and laser radiation limits should conform to those specified in Guideline 1, MIL-HDBK-454. Definitive and specific data should be obtained from the service agency responsible for control of personnel exposure to radiation.

5.13.8 Trainers. Training materials, devices, simulators, and other equipment using embedded training, should incorporate safeguards, safety warnings, and procedures developed for the remainder of the system.

5.13.9 Stealth and covert operations. Systems and equipment for use in combat may require stealth for covert operations. The need for low-observable exterior and camouflage may preclude the use of brightly colored warning signs, warning lights, or auditory alarms. For such systems and equipment, techniques, such as barriers and interlocks, shall be used to ensure safe operations.

Downloaded from http://www.everyspec.com on 2010-01-26T2:50:27.

5.14 User-computer interface.

5.14.1 General. Computer programs and equipment interfaces shall provide a functional interface between the system for which they are designed and users (operators/maintainers) of that system. This interface shall optimize compatibility with personnel and shall minimize conditions which can degrade human performance or contribute to human error.

5.14.1.1 Standard procedures. Users shall be provided standard procedures for similar, logically related transactions.

5.14.1.2 Computer response. Every input by a user shall consistently produce some perceptible response output from the computer.

5.14.1.3 On-line help. Users shall be provided on-line, context-sensitive help. Definitions of allowable options, system capabilities, procedures, and ranges of values shall be displayable at the user's request.

5.14.1.4 System status. Users shall be provided at all times with system-status information regarding operational modes and availability, either automatically or by request.

5.14.1.5 Log-on procedures. In applications where users must log-on to the system, log-on shall be a separate procedure that must be completed before a user is required to select among any operational options.

5.14.1.5.1 Automatic log-on display. Appropriate prompts for log-on should be automatically displayed on the user's terminal with no special action required other than turning on the terminal.

5.14.1.5.2 Log-on-feedback. Users shall be provided feedback relevant to the log-on procedure that indicates the status of the inputs.

5.14.1.5.3 Log-on delay. If a user cannot log-on to a system, a prompt should be provided to explain the reason for this inability. Log-on processes should require minimum input from the user consistent with the requirements prohibiting illegal entry.

5.14.1.6 Log-off procedures. When a user signals for system log-off, or application exit or shut-down, the system should check pending transactions to determine if data loss seems probable. If so, the computer should prompt for confirmation before the log-off command is executed.

5.14.1.7 Computer failure. If a partial hardware/software failure occurs, the program should allow for orderly shutdown and establishment of a check-point so restoration can be accomplished without loss of computing performed to date.

5.14.1.8 Interaction. Where two or more users must have simultaneous read access to the computer program or data processing results from multiple personal equipment interfaces, the operation by one person shall not interfere with the operations of another person unless mission survival may be contingent upon pre-emption. Provisions shall be made so that the pre-empted user can resume operations at the point of interference without information loss.

5.14.2 Data entry.

5.14.2.1 General. Data entry functions shall be designed to establish consistency of data entry transactions, minimize input actions and memory load on the user, ensure compatibility of data entry with data display, and provide flexibility of user control of data entry.

Downloaded from http://www.everyspec.com on 2010-01-26T2:50:27.

5.14.2.1.1 User pacing. Data entry shall be paced by the user, rather than by the system.

5.14.2.1.2 Positive feedback. The system shall provide a positive feedback to the user of the acceptance or rejection of a data entry. Feedback response times shall conform to 5.14.9.

5.14.2.1.3 Processing delay. Where system overload or other system conditions will result in a processing delay, the system shall acknowledge the data entry and provide an indication of the delay to the user. If possible, the system shall advise the user of the time remaining for the process or of the fraction of the process completed.

5.14.2.1.4 Explicit action. Data entry shall require an explicit completion action, such as pressing an ENTER key.

5.14.2.1.5 Validation. Data entries should be validated by the system for correct format, legal value, or range of values. Where repetitive entry of data sets is required, data validation for each set should be completed before another transaction can begin. See also 5.14.8.11.

5.14.2.1.6 Software-available data. The user should not be required to enter data already available to the software.

5.14.2.1.7 Input units. Data should be entered in units that are familiar to the user.

5.14.2.1.8 Cursors.

5.14.2.1.8.1 Control. Systems employing cursors shall provide cursor control capability. The user should be able to adjust the sensitivity of the cursor movement to be compatible with the required task and user skills.

5.14.2.1.8.2 Display. A movable cursor within the display shall have a distinctive visual attribute that does not obscure other displayed entities. When fine positioning accuracy is required, as in some forms of graphic and image processing applications, the displayed cursor shall include an appropriate point designation feature (such as crosshairs). The cursor shall not move beyond the display boundaries and disappear from sight. If the cursor is moved by depressing a key, releasing the key shall cause the cursor to stop moving.

5.14.2.1.8.3 Home position. The home position for the cursor should be consistent across similar types of displays.

5.14.2.1.8.4 Explicit actuation. A separate, explicit action, distinct from cursor position, shall be required for the actual entry (e.g., enabling, actuation) of a designated position.

5.14.2.1.8.5 Incremental cursor positioning. Where cursor positioning is incremental by discrete steps, the step size of cursor movement shall be consistent horizontally (i.e., in both right and left directions), and vertically (in both up and down directions).

5.14.2.1.8.6 Keyboard cursor control. When position designation is required in a task emphasizing keyed data entry, cursor control should be by some device integral to the keyboard. If cursor movement is accomplished by depressing keys, the keys shall be located on the main keyboard.

5.14.2.1.8.7 Movement relationships. The response of a cursor to control movements shall be consistent, predictable, and compatible with the user's expectations. For cursor control by key action a key labeled with a left- pointing arrow should move the cursor leftward; for cursor control by

Downloaded from http://www.everyspec.com on 2010-01-26T2:50:27.

joystick, leftward movement of the control should result in leftward movement of the cursor. Cursor responses to movements of other controls shall conform to 5.4.1.2.1 or to the movement-related provisions of the applicable control specified in subsection 5.4.

5.14.2.1.9 Abbreviations, mnemonics, and codes. When abbreviations, mnemonics, or codes are used to shorten data entry, they shall be distinctive and have an intuitive relationship or association to normal language or specific job-related terminology. An abbreviation should be no longer than is necessary to ensure a clear and unambiguous meaning.

5.14.2.1.10 Explicit delete action. Data deletion or cancellation shall require an explicit action, such as depressing a DELETE key. Permanent deletion (in absence of an "undo" function) of more than one character shall not be allowed without an affirmative response to an "are you sure?" type of query.

5.14.2.1.11 Change of data. Where a user requests change (or deletion) of a data item that is not currently being displayed, the option of displaying the old value before confirming the change should be presented.

5.14.2.1.12 Single method of data entry. Data entry methods and data displays should not require the user to shift between entry methods.

5.14.2.1.13 Data entry display. Where data entry on an electronic display is permitted only in prescribed areas, a clear visual definition of the entry fields shall be provided.

5.14.2.2 Keyboard. Keyboards shall conform to the provisions below; however, where a keyboard is part of a visual display terminal used for text processing, data entry, or data inquiry applications in an office environment or equivalent, see 5.15.

5.14.2.2.1 Use. A keyboard should be used to enter alphabetic, numeric and other special characters into the system.

5.14.2.2.2 Characteristics. Keyboard characteristics shall conform to ANSI/HFS-100. *

5.14.2.2.3 Length. Except for extended text, the length of individual data items should be minimized.

5.14.2.2.4 Justification. When entering tabular data, the user shall not be required to right- or left-justify tabular data entries. The system shall automatically justify columnar data with respect to decimal point, left margin or right margin, depending on the type of data.

5.14.2.2.5 Numeric keypads. Keyboards used in systems that require substantial numeric input shall be equipped with a numeric keypad.

5.14.2.2.6 Minimization of keying. The amount of keying required should be minimized.

5.14.2.2.7 Minimization of shift keying. The use of key shifting functions should be minimized during data entry transactions.

5.14.2.2.8 Data change. In keyed data entry, means shall be provided to allow users to change previous entries, if necessary, by DELETE and INSERT actions.

5.14.2.3 Fixed function (dedicated) keys.

Downloaded from http://www.everyspec.com on 2010-01-26T2:50:27.

5.14.2.3.1 Use. Fixed function keys (e.g., ENTER) should be used for time-critical, error-critical, or frequently used control inputs.

5.14.2.3.2 Standardization. Fixed function keys should be common throughout the system.

5.14.2.3.3 Functional consistency. Once a key has been assigned a given function, it should not be reassigned to a different function for a given user.

5.14.2.3.4 Availability. Fixed function keys should be selected to control functions that are continuously available; i.e., lockout of fixed function keys shall be minimized. At any step in a transaction sequence, however, function keys, not used for current inputs, should be temporarily disabled under computer control. Mechanical overlays should not be used for this purpose.

5.14.2.3.5 Non-active keys. Non-active fixed function keys should be replaced by a blank key.

5.14.2.3.6 Grouping. Fixed function keys shall be logically grouped and shall be placed in distinctive locations on the keyboard.

5.14.2.3.7 Actuation. Except when used to toggle between two opposing states, a fixed function key should require only a single actuation to accomplish its function.

5.14.2.3.8 Feedback. When fixed function key activation does not result in an immediately observable natural response, the user shall be given an indication of system acknowledgment.

5.14.2.3.9 Function labels. Key assignments shall be displayed at all times, preferably by direct marking. Where abbreviations are necessary, standard abbreviations should be used.

5.14.2.3.10 Prolonged function key depression. Prolonged depression of function keys shall not result in a repeat of the function except for the DELETE key.

5.14.2.4 Variable function keys.

5.14.2.4.1 Use. Variable function keys may be used for programmable menu selection and entry of control functions. They should not be used for initiating critical functions.

5.14.2.4.2 Status display. When the effect of a function key varies, the status of the key shall be displayed.

5.14.2.4.3 Reprogrammable or inactive default functions. When keys with labeled default functions are reprogrammed or turned off, a visual warning shall alert the user that the standard function is not currently accessible via that key.

5.14.2.4.4 Relabeling. Provision shall be made for easily relabeling variable function keys. Labels for variable function keys, located along the perimeter of a display, may be generated on the display face.

5.14.2.4.5 Shifted characters. Shift keys should not be required to operate variable function keys.

5.14.2.4.6 Easy return to base-level functions. Where the functions assigned to a set of function keys change as a result of user selection, the user should be given an easy means to return to the initial, base-level functions. For example, in cockpit design, where multifunction keys may be used for various purposes such as navigation or weapons control, the aircrew should be able to take a single action to restore those keys quickly to their basic flight control functions.

Downloaded from http://www.everyspec.com on 2010-01-26T2:50:27.

5.14.2.5 Lightpen.

5.14.2.5.1 Use. A lightpen may be used when non-critical, imprecise input functions are required. Such direct-pointing controls should be used when item selection is the primary type of data entry.

5.14.2.5.2 Dimensions and mounting. See 5.4.3.2.7.3.

5.14.2.5.3 Actuation. Lightpens shall be equipped with a discrete actuating/deactuating mechanism. Push-tip switch actuation force should be 0.5N - 1.4N (2-5 oz).

5.14.2.5.4 Feedback. Two forms of feedback shall be provided to the user:

a. Position of the lightpen, preferably in the form of displayed cursor (e.g., circle, crosshair) or highlighting which also informs the user that the system is recognizing the presence of the lightpen. The feedback shall be large enough to be seen under the point of the lightpen.

b. Actuation of the lightpen and receipt of the input by the system.

5.14.2.6 Directional controllers.

5.14.2.6.1 Use. A joystick, trackball or similar device may be used when precise input functions are required. Joystick, trackballs, grid-and-stylus devices and x-y controllers shall conform to 5.4.3.2.2, 5.4.3.2.3, 5.4.3.2.4, 5.4.3.2.5, and 5.4.3.2.6.

5.14.2.6.2 Actuation/deactuation. A discrete mechanism shall be provided to allow the user to actuate/deactuate the device.

5.14.2.7 Touch screen. See paragraph 5.4.6 for information on touch screens.

5.14.3 Data display.

5.14.3.1 Display format.

5.14.3.1.1 Consistency. Display formats should be consistent within a system. When appropriate for users, the same format should be used for input and output. Data entry formats should match the source document formats. Essential data, text, and formats should be under computer, not user, control.

5.14.3.1.2 Criticality. Only data essential to the user's needs shall be displayed.

5.14.3.1.3 Readily usable form. Data presented to the user shall be in a readily usable and readable form such that the user does not have to transpose, compute, interpolate or mentally translate into other units, number bases, or languages.

5.14.3.1.4 Order and sequences. When data fields have a naturally occurring order (e.g., chronological or sequential), such order shall be reflected in the format organization of the fields.

5.14.3.1.4.1 Data grouped by importance. Displayed data items that are critical or require immediate user response should be grouped at the top of the display.

5.14.3.1.4.2 Data grouped by function. Sets of data that are associated with specific questions or related to particular functions may be grouped together to signify those functional relationships.

Downloaded from http://www.everyspec.com on 2010-01-26T2:50:27.

5.14.3.1.4.3 Data grouped by frequency. Data items used more frequently than others may be grouped at the top of the display.

5.14.3.1.5 Data separation. Separation of groups of information should be accomplished by blanks, spacing, lines, color coding, or other means consistent with the application.

5.14.3.1.6 Recurring data fields. Recurring data fields within a system shall have consistent names and should occupy consistent relative positions across displays.

5.14.3.1.7 Extended alphanumerics. When five or more alphanumeric characters without natural organization are displayed, the characters shall be grouped in blocks of three to five characters within each group separated by a minimum of one blank space or other separating character such as a hyphen or slash.

5.14.3.1.8 Comparative data fields. Data fields to be compared on a character-by-character basis shall be positioned one above the other with alignment of characters to be compared.

5.14.3.1.9 Labels and titles. Each display shall be labeled with a title or label that is unique within the system. To make the display as meaningful as possible and to reduce user memory requirements, every field or column heading should be labeled.

5.14.3.1.9.1 Display title. Every display should begin with a title or header at the top, describing briefly the contents or purpose of the display. At least one blank line shall separate the title and the body of the display.

5.14.3.1.9.2 Command entry, prompts, messages at bottom. The last few lines at the bottom of every display should be reserved for status and error messages, prompts, and command entry. Messages that are critical or that require operator acknowledgment should appear in their own dialogue boxes.

5.14.3.1.10 Data group labels. Each individual data group or message shall contain a descriptive title, phrase, word or similar device to designate the content of the group or message. Labels shall:

a. be consistently located adjacent to (and preferably above or to the left of) the data group or message they describe,

b. be unambiguously related to the group, field, or message they describe,

c. be highlighted or otherwise accentuated to facilitate operator scanning and recognition,

d. use an accentuating technique different and easily distinguished from the method used to highlight or code emergency or critical messages,

e. be unique and meaningful to distinguish them from data, error messages, or other alphanumerics, and

f. be displayed in upper case only, while text may be displayed in upper and lower case. *

5.14.3.1.11 Scrolling. Items continued on the next page (scrolled) should be numbered relative to the last item on the previous page.

5.14.3.1.12 Page numbering. Each page of a multiple page display shall be labeled to identify the currently displayed page and the total number of pages, e.g., Page 2 of 5.

Downloaded from http://www.everyspec.com on 2010-01-26T2:50:27.

5.14.3.1.13 Frame identification. Every display frame shall have a unique identification to provide a reference for use in requesting the display of that frame. The frame identification should be an alphanumeric code or an abbreviation which is prominently displayed in a consistent location. It should be short (3-7 characters) and/or meaningful enough to be learned and remembered easily.

5.14.3.2 Display content.

5.14.3.2.1 Standardization. The content of displays within a system shall be presented in a consistent, standardized manner.

5.14.3.2.2 Information density. Information density should be minimized in displays used for critical task sequences. At least one character line shall be left blank above and below critical information; at least two character spaces shall be left blank to the left and right of critical information (see 5.14.3.1.5 and 5.14.3.3.1).

5.14.3.2.2.1 Crowded displays. When a display contains too much data for presentation in a single frame, the data shall be partitioned into separately displayable pages.

5.14.3.2.2.2 Related data on same page. When partitioning displays into multiple pages, functionally related data items shall be displayed together on one page.

5.14.3.2.2.3 Page labeling. In a multipage display, each page shall be labeled to show its relation to the others.

5.14.3.2.3 Abbreviations and acronyms. Information shall be displayed in plain concise text wherever possible. Where abbreviations and acronyms are required, they shall conform to current standards. New acronyms, if required, shall be developed using logical rules of abbreviation. Abbreviations should be distinctive to avoid confusion. Words should have only one consistent abbreviation. No punctuation should be used in abbreviations. Definitions of all abbreviations, mnemonics and codes should be provided at the user's request

5.14.3.2.4 Data entry and display consistency. Data display word choice, format, and style should be consistent with the requirements for data entry and control.

5.14.3.2.5 Context for displayed data. The user should not have to rely on memory to interpret new data; each data display should provide needed context, including recapitulating prior data from prior displays as necessary.

5.14.3.3 Display coding.

5.14.3.3.1 Use. Coding shall be employed to differentiate between items of information and to call the user's attention to changes in the state of the system. Coding should be used for critical information, unusual values, changed items, items to be changed, high priority messages, special areas of the display, errors in entry, criticality of command entry, and targets. Consistent, meaningful codes shall be used. Coding shall not reduce legibility or increase transmission time.

5.14.3.3.2 Flash. Flash coding shall be employed to call the user's attention to mission critical events only. No more than 2 flash rates shall be used. Where one rate is used, the rate shall be 3 - 5 flashes per second. Where two rates are used, the second rate shall be not greater than 2 per second.

5.14.3.3.3 Brightness. Brightness intensity coding shall be employed only to differentiate between an item of information and adjacent information. No more than two levels of brightness shall be used. Each level shall be separated from the nearest other level by not less than a 2:1 ratio.

Downloaded from http://www.everyspec.com on 2010-01-26T2:50:27.

5.14.3.3.4 Pattern and location. Pattern and location coding may be used to reduce user search time by restricting the area to be searched to prescribed segments.

5.14.3.3.5 Underlining. Underlining may be employed to indicate unusual values, errors in entry, changed items, or items to be changed.

5.14.3.3.6 Symbol and size. Symbol coding may be used to enhance information assimilation from data displays. Symbols shall be analogs of the event or system element they represent or be in general use and well known to the expected users. Where size difference between symbols is employed, the major dimensions of the larger shall be not less than 150% of the major dimension of the smaller. Not more than three size levels shall be used.

5.14.3.3.6.1 Special symbols. When special symbols are used to signal critical conditions, they shall be used for only that purpose.

5.14.3.3.6.2 Markers close to words marked. When a special symbol is used to mark a word, the symbol shall be separated from the beginning of the word by one space.

5.14.3.3.7 Color. Color coding may be employed to differentiate between classes of information in complex, dense, or critical displays. The colors selected shall not conflict with the color associations specified in Table II. Information shall not be coded solely by color if the data must be accessed from monochromatic as well as color terminals or printed in hard copy versions. To enhance detectability and discrimability, color-filled symbols should be used instead of color outlined symbols.

5.14.3.3.8 Shape. Shape coding may be used for search and identification tasks. When shape coding is used, the codes selected shall be based on established standards or conventional meanings.

5.14.3.3.9 Brightness inversion. When a capability for brightness inversion is available (so-called "reverse video", where dark characters on a bright background can be changed under computer control to bright on dark, or vice versa), it may be used for highlighting critical items that require user attention. When used for alerting purposes, brightness inversion shall be reserved for that purpose, and not be used for general highlighting.

5.14.3.4 Dynamic displays.

5.14.3.4.1 Changing values. Changing alphanumeric values which the operator must reliably read shall not be updated more often than once per second. Changing values which the viewer uses to identify rate of change or to read gross values shall not be updated faster than 5 times per second, nor slower than 2 per second, when the display is to be considered as real-time.

5.14.3.4.2 Update rate. The rate of update should be controllable by the user and shall be determined by the use to be made of the information.

5.14.3.4.3 Display freeze. A display freeze mode should be provided to allow viewing any selected frame that is updated or advanced automatically by the system. An option shall be provided to allow resumption at freeze point or at the current real-time point.

5.14.3.4.4 Freeze feedback. An appropriate label shall be provided to remind the operator when the display is in the freeze mode.

5.14.3.5 Tabular data.

5.14.3.5.1 Use. Tabular data displays shall be used to present row-column data to aid detailed comparison of ordered sets of data.

Downloaded from http://www.everyspec.com on 2010-01-26T2:50:27.

5.14.3.5.2 Standard formats. Location of recurring data shall be similar among all tabular data displayed and common throughout the system.

5.14.3.5.3 Arrangement. Tabular data shall be displayed in rows and columns. If the data in the rows has order, the order shall increase from left to right. If the data in the columns has order, the order shall increase from top to bottom.

5.14.3.5.4 Titles. When tabular data are divided into classifications, the classification titles shall be displayed and subclassification shall be identified. When tabular data extend over more than one page vertically, the columns shall be titled identically on each page.

5.14.3.5.5 Horizontal extension. Tabular displays should not extend over more than one page horizontally.

5.14.3.5.6 Lists. Items in lists shall be arranged in a recognizable order, such as chronological, alphabetical, sequential, functional, or importance.

5.14.3.5.6.1 List lines. Each item in a list shall start on a new line.

5.14.3.5.6.2 Vertical extension. Where lists extend over more than one display page, the last line of one page should be the first line on the succeeding page.

5.14.3.5.6.3 Marking multiline items in a list. Where a single item in a list continues for more than one line, such items shall be marked in some way (e.g., blank line, indentation) so that the continuation of the item is obvious.

5.14.3.5.6.4 Arabic numerals. When listed items will be numbered, Arabic numerals should be used rather than Roman.

5.14.3.5.6.5 Vertical ordering in multiple columns. Where items in a list are displayed in multiple columns, items shall be ordered vertically within each column.

5.14.3.5.6.6 Hierarchic structure for long lists. Where lists are long and must extend beyond more than one displayed page, a hierarchic structure shall be used to permit the logical partitioning into related shorter lists

5.14.3.5.7 Numeric punctuation. Long numeric fields should be punctuated with spaces, commas, or slashes. Conventional punctuation schemes should be used if in common usage. Where none exist a space should be used after every third or fourth digit. Leading zeros shall not be used in numerical data except where needed for clarity.

5.14.3.5.8 Alphanumeric grouping. Strings of alphanumerics should be grouped into sets of three to five characters or grouped at natural breaks. When a code consists of both letters and digits, common character types should be grouped by common character type for ease of location.

5.14.3.5.9 Distinctive and informative labels. Rows and columns shall be labeled distinctively to guide data entry.

5.14.3.5.10 Justification of numeric entry. Users shall be allowed to make numeric entries in tables without concern for justification; the computer shall right-justify integers, or justify with respect to a decimal point if present.

5.14.3.5.11 Labeling units of measurement. The units of displayed data shall be consistently included in the displayed column labels.

Downloaded from http://www.everyspec.com on 2010-01-26T2:50:27.

5.14.3.5.12 Consistent column spacing. The widths of columns containing the same data elements should be uniform and consistent within a table and from one table to another.

5.14.3.5.13 Column scanning cues. A column separation not less than three spaces shall be maintained.

5.14.3.5.14 Row scanning cues. In dense tables with many rows, a blank line shall be inserted after a group of rows at regular intervals. No more than five lines should be displayed without a blank line being inserted.

5.14.3.6 Graphic displays.

5.14.3.6.1 Use. Graphic data displays may be used to present assessment of trend information, spatially structured data, time critical information or relatively imprecise information.

5.14.3.6.2 Recurring data. See 5.14.3.1.6.

5.14.3.6.3 Refresh rates. Graphic displays which require user visual integration of changing patterns shall be updated at the maximum refresh rate of the display device consistent with the user's information handling rates.

5.14.3.6.4 Graph axes. The axes of graphs shall be labeled and should be graduated in accordance with 5.2.3.1.4, 5.2.3.1.5, and 5.2.3.1.6.

5.14.3.6.5 Trend lines. When trend lines are to be compared, multiple lines should be used on a single graph.

5.14.3.6.6 Pointing. Where graphic data entry involves frequent pointing on a display surface, the user interface shall provide display control and sequence control by pointing, in order to minimize shifts from one entry device to another. For example, in drawing a flow chart, a user should be able to link elements or points directly by pointing at them or drawing lines between rather than by separately keyed entries.

5.14.3.6.7 Distinctive cursor. The current cursor position on graphic displays shall be indicated by displaying a distinctive cursor symbol at that point, e.g., a plus-sign, which represents abbreviated crosshairs whose intersection can mark a position with reasonable precision.

5.14.3.6.8 Precise positioning. Where data entry requires exact placement of graphic elements, users shall be provided the capability for expansion of the critical display area (e.g., zooming and panning) to make the positioning task easier and more precise.

5.14.3.6.9 Confirming cursor position. For most graphics data entry, pointing should be a dual action, with the first action positioning the cursor at a desired position and the second action confirming that position to the computer. An exception may be a design allowing "free-hand" drawing of continuous lines where the computer must store and display a series of cursor positions as they are entered by the user.

5.14.3.6.10 Selecting graphic elements. Users shall be provided some means for designating and selecting displayed graphic elements for manipulation. Normally this function is performed by pointing where a pointing device is provided for line drawing purposes.

5.14.3.6.11 Selecting from displayed attributes. During graphic data entry, users should be allowed to specify attributes for displayed elements (e.g., text font, plotting symbol, line type) by selecting from displayed samples illustrating the available options.

Downloaded from http://www.everyspec.com on 2010-01-26T2:50:27.

5.14.3.6.12 Displaying current attributes. During graphic data entry/editing, the selected attributes that will affect current actions shall be displayed for ready reference as a reminder of current selections in effect.

5.14.3.6.13 Easy storage and retrieval. An easy and convenient means shall be provided for saving and retrieving graphic displays for their possible re-use. The user should be allowed to designate filenames of his or her choice for the stored graphic data.

5.14.3.6.14 Automatic data registration. The computer should provide automatic registration or alignment of computer-generated graphic data, so that variable data are shown properly with respect to fixed background or data map at any display scale.

5.14.3.6.15 Predefined graphic formats. Where graphic data must be plotted in predefined standard formats (e.g., target areas on maps, flight plans), templates or skeletal displays shall be provided for those formats to aid data entry.

5.14.3.6.16 Computer derivation of graphic data. When graphic data can be derived from data already available in the computer, machine aids for that purpose shall be provided.

5.14.3.6.17 Drawing lines. When line drawing is required, users shall be provided with aids for drawing straight line segments. When line segments must join or intersect, computer aids shall be provided to aid in such connection.

5.14.3.6.18 Drawing figures. When a user must draw figures, computer aids shall be provided for that purpose (e.g., templates, tracing techniques, stored forms).

5.14.3.6.19 Drawing lines and figures with numeric coordinates. When line or figures must be drawn to represent numeric coordinates, computer aids should include templates for entering the coordinates, and if necessary, selecting the appropriate units for those coordinates.

5.14.3.6.20 Changing size. When editing graphic data, users shall be provided with the capability to change the size (scale) of any selected element on the display, rather than delete and recreate the element in a different size.

5.14.3.6.21 Highlighting critical data. When a user's attention must be directed to a portion of a graphic display showing critical or abnormal data, that feature should be highlighted with some distinctive means of data coding.

5.14.3.6.22 Reference index. When a user must compare graphic data to some significant level or critical value, a reference index or baseline shall be included in the display.

5.14.3.6.23 Data annotation. When precise reading of a graphic display may be required, the capability should be provided to supplement the graphic representation with the actual numeric values.

5.14.3.6.24 Normal orientation for labels. The labels on dynamic graphic displays shall remain with the top of the label up when the displayed image rotates.

5.14.3.6.25 Pictorial symbols. Pictorial symbols (e.g., icons, pictograms) should look like the objects, features, or processes they represent.

5.14.3.6.26 Display of scale. When a map or other graphic display has been expanded from its normal presentation, an indicator of the scale expansion shall be provided.

Downloaded from http://www.everyspec.com on 2010-01-26T2:50:27.

5.14.3.6.27 Consistent scaling. When users must compare graphic data across a series of charts, the same scale should be used for each chart.

5.14.3.6.28 Single scale only. Where graphs are presented, only a single scale shall be shown in each axis, rather than including different scales for different curves in the graph. If interpolation must be made or where accuracy of reading graphic data is required, computer aids should be provided the user.

5.14.3.6.29 Unobtrusive grids. Any displayed grid lines should be unobtrusive and shall not obscure data elements. Grid lines should be displayed or suppressed at the option of the user.

5.14.3.6.30 Direct display of differences. Where users must evaluate the difference between two sets of data, that difference should be plotted directly as a curve in its own right, rather than requiring users to compare visually the curves that represent the original data sets.

5.14.3.6.31 Bar graphs. Bar graphs should be used for comparing a single measure across a set of several entities or for a variable sampled at discrete intervals.

5.14.3.6.31.1 Bar spacing. Adjacent bars should be spaced closely enough, normally not more than one bar width, so that a direct visual comparison can be made without eye movement.

5.14.3.6.31.2 Histograms (step charts). Histograms (bar graphs without spaces between the bars) should be used where bar graphs are required and where a great many intervals must be plotted.

5.14.3.7 Text/program editing.

5.14.3.7.1 Buffer. When inserting characters, words or phrases (e.g., editing), items to be inserted should be collected in a buffer area and displayed in the prescribed insert area of the screen for subsequent insertion by user command.

5.14.3.7.2 Presentation mode. Display mode rather than line mode should be used for text editing.

5.14.3.7.3 Display window. ROLL and SCROLL commands should refer to the display window, not the text/data; that is, the display window should appear to the user to be an aperture moving over stationary text.

5.14.3.7.4 Editing commands. Editing commands, such as MOVE, COPY, and DELETE, for adding, inserting, or deleting text/program segments, shall be provided.

5.14.3.7.4.1 Text edit commands. In text editing, editing commands should be based on character, word, sentence, paragraph, and higher-order segments.

5.14.3.7.4.2 Program edit commands. In program editing, the special commands shall be based on lines or subprograms. Program lines shall reflect a numbering scheme for ease in editing and error correction. When available, line-by-line syntax checking shall be under user control.

5.14.3.7.4.3 Tab controls. For editing programs or tabular data, cursor tab controls or other provisions for establishing and moving readily from field to field shall be provided.

5.14.3.7.5 Editing commands. Where editing commands are made by keying onto the display, the editing commands shall be readily distinguishable from the displayed textual material.

Downloaded from http://www.everyspec.com on 2010-01-26T2:50:27.

5.14.3.7.6 Highlighted text. Where text has been specified to become the subject of control entries (e.g., for underlining, bolding, moving, copying, or deleting), the affected segment of text shall be highlighted to indicate its boundaries.

5.14.3.7.7 String search. The capability shall be provided to allow the user to specify a string of text (words, phrases, or numbers) and request the computer to advance (or back up) the cursor automatically to the next occurrence of that string.

5.14.3.7.8 Automatic word wrap. An automatic word wrap (carriage return) shall be provided when the text reaches the right margin for entry/editing of unformatted text. User override shall be provided.

5.14.3.7.9 Format control. An easy means shall be provided for users to specify required format control features during text entry/editing, e.g., margins, tab settings, line spacing.

5.14.3.7.10 Predefined formats. When text formats must follow predefined standards, the required format shall be provided automatically. Where text formats are a user option, a convenient means should be provided to allow the user to specify and store for future use the formats that have been generated for particular applications.

5.14.3.7.11 Frequently used text. The capability shall be provided to label and store frequently used text segments (e.g., signature blocks, organizational names, call signs, coordinates), and later to recall (copy into current text) stored segments identified by their assigned labels.

5.14.3.7.12 Text displayed as printed. Users should have the option of displaying text as it will be printed, including underlining, boldface, subscript, superscript, special characters, special symbols, and different styles and sizes of type. Where display of all possible features (e.g., special fonts) is impractical, format codes should be highlighted and displayed within the text in order to mark the text that will be affected by the code.

5.14.3.7.13 Control annotations. Where special formatting features are indicated in the text by use of special codes or annotation, the insertion of the special annotation should not disturb the spacing of the displayed text and shall not disturb formatting of graphs and tables or alignment of rows and columns.

5.14.3.7.14 Flexible printing options. In printing text, users shall be allowed to select among available output formats (e.g., line spacing, character size, margin size, heading, and footing) and to specify the pages of a document to be printed.

5.14.3.7.15 Head- and foot-of file. The means shall be provided to readily move the cursor to the head or the foot (end) of the file.

5.14.3.8 Audio displays.

5.14.3.8.1 Uses. Audio displays may be used as part of the user-computer interface, where (a) the common mode of visual display is restricted by overburdening or user mobility needs and it is desirable to cue, alert or warn the user, or (b) the user should be provided feedback after control actuation, data entry, or completion of timing cycles and sequences.

5.14.3.8.2 Other requirements. See 5.3.1, 5.3.2.1, 5.3.2.3 and 5.3.2.4.

5.14.3.8.3 Supportive function. Audio signals used in conjunction with visual displays shall be supplementary to the visual signals and shall be used to alert and direct the user's attention to the appropriate visual display.

Downloaded from http://www.everyspec.com on 2010-01-26T2:50:27.

5.14.3.8.4 Signal characteristics. Signals may be one time or intermittent. Intermittent signals shall be automatically terminated when no longer applicable, and by operator control.

5.14.3.8.5 Frequency. See 5.3.3.1

5.14.3.8.6 Audibility. See 5.3.4.1

5.14.3.8.7 Alarm settings. When alarm signals are established on the basis of user-defined logic, users shall be permitted to obtain status information concerning current alarm settings, in terms of dimensions (variables) covered and values (categories) established as critical. Alarm status information shall be provided in monitoring situations where responsibility may be shifted from one user to another as in changes of shift.

5.14.4 Interactive control.

5.14.4.1 General. Control actions should be minimized, consistent, make minimal memory demands of the user and be sufficiently flexible to adapt to different user needs. Dialogue types should be compatible with anticipated task requirements and user skills. System response times should accommodate dialogue type and requirements for user training (see Table XXII).

5.14.4.1.1 Response time. System response times shall be consistent with operational requirements. Required user response times shall be compatible with required system response time. Required user response times shall be within the limits imposed by total user tasking expected in the operational environment. (See 5.14.9)

5.14.4.1.1.1 Response time induced keyboard lockout. If computer processing time requires delay of concurrent user inputs and no keyboard buffer is available, keyboard lockout shall occur until the computer can accept the next transaction. An alert shall be displayed to indicate to the user that lockout has occurred.

5.14.4.1.1.2 Keyboard restoration. When the computer is ready to continue, following response time induced keyboard lockout, a signal to so indicate shall be presented, e.g., cursor changes back to normal shape.

5.14.4.1.1.3 Interrupt to end keyboard lockout. When keyboard lockout has occurred, the user should be provided with a capability to abort a transaction that has resulted in an extended lockout. Such capability should act like an UNDO command that stops ongoing processing and does not RESET the computer thereby losing prior processing.

5.14.4.1.2 Simplicity. Control/display relationships shall be straightforward and explicit. Control actions shall be simple and direct, whereas potentially destructive control actions shall require extended user attention such that they are not easily acted on (e.g., are you sure queries).

5.14.4.1.3 Accidental actuation. Provision shall be made to prevent accidental actuation of potentially destructive control actions, such as accidental erasure or memory dump.

5.14.4.1.4 Compatibility with user skill. Controls shall be compatible with the lowest anticipated user skill levels. Experienced users should have options which shortcut intervening steps necessary for inexperienced users.

5.14.4.1.5 Availability of information. Information necessary to select or enter a specific control action shall be available to the user when selection of that control action is appropriate.

Downloaded from http://www.everyspec.com on 2010-01-26T2:50:27.

5.14.4.1.6 Concurrent display. Control actions to be selected from a discrete set of alternatives shall have those alternatives displayed prior to the time of selection. The current value of any parameter or variable with which the user is interacting shall be displayed. User control inputs shall result in a positive feedback response displayed to indicate performance of requested actions.

5.14.4.1.7 Hierarchical process. The number of hierarchical levels used to control a process or sequence should be minimized. Display and input formats shall be similar within levels. The system shall indicate the current positions within the sequence at all times.

5.14.4.1.8 User memorization. The user should not be required to learn mnemonics, codes, special or long sequences, or special instructions.

5.14.4.1.9 Dialogue type. The choice of dialogue type (e.g., form filling, menus, command language) for interactive control shall be compatible with user characteristics and task requirements.

5.14.4.1.10 Number system. When numeric data is displayed or required for control input, such data shall be in the decimal, rather than binary, octal, hexadecimal or other number system.

5.14.4.1.11 Data manipulation. The user should be able to manipulate data without concern for internal storage and retrieval mechanisms of the system.

5.14.4.1.12 Computer processing constraints. The sequence of transaction selection should generally be dictated by user choices and not by internal computer processing constraints.

5.14.4.1.13 Feedback for correct input. Control feedback responses to correct user input shall consist of changes in state or value of those display elements which are being controlled and shall be presented in an expected and logically natural form. An acknowledgment message shall be provided only where the more conventional mechanism is not appropriate or where feedback response time must exceed one second.

5.14.4.1.14 Feedback for erroneous input. Where control input errors are detected by the system (see 5.14.8.2), error messages shall be available as provided in 5.14.8.5, and error recovery procedures shall be as provided in 5.14.8.6.

5.14.4.1.15 Control input data display. The presence and location of control input data entered by the user shall be clearly and appropriately indicated. Data displayed should not mislead the user with regard to nomenclature, units of measure, sequence of task steps, or time phasing.

5.14.4.1.16 Originator identification. Except for broadcast communication systems, the transmitter of each message in inter-user communications should be identified--automatically, if possible.

5.14.4.2 Menu selection.

5.14.4.2.1 Use. Menu selection interactive control should be used for tasks that involve little or no entry of arbitrary data and where users may have relatively little training. It should also be used when a command set is so large that users are not likely to be able to commit all of the commands to memory.

5.14.4.2.2 Selection.

Downloaded from http://www.everyspec.com on 2010-01-26T2:50:27.

5.14.4.2.2.1 Devices. A mouse or other pointing device (including touch technology) should be used for menu selection. (See also Section 5.4.6 Touch Screen Controls for Displays). Where design constraints do not permit pointing devices, a standard window should be provided for the user to key the selected option code. If menu selection is accomplished by pointing, dual actions should be provided. The first action should designate the selected option. This should be followed by a separate action to enter the selection for processing.

5.14.4.2.2.2 Titles. Each page of options (menu) should have a title that clarifies the purpose of that menu.

5.14.4.2.2.3 Series entry. Users should be provided the capability to stack menu selections, i.e., to make several menu selections without having each menu displayed.

5.14.4.2.2.4 Sequences. A menu shall not consist of a long list of multi-page options, but shall be logically segmented to allow several sequential selections among a few alternatives.

5.14.4.2.3 Active option presentation. The system shall present only menu selections for actions which are currently available.

5.14.4.2.4 Format consistency. Menus shall be presented in a consistent format throughout the system and should be readily available at all times.

5.14.4.2.5 Option sequence. Menu selections shall be listed in a logical order, or, if no logical order exists, in the order of frequency of use.

5.14.4.2.6 Simple menus. If number of selections can fit on one page in no more than two columns, a simple menu shall be used. If the selection options exceed two columns, hierarchical menus may be used.

5.14.4.2.7 Option presentation. Selection codes and associated descriptors shall be presented on single lines.

5.14.4.2.8 Direct function call. If several levels of hierarchical menus are provided, a direct function call capability shall be provided such that the experienced user does not have to step through multiple menu levels.

5.14.4.2.9 Option coding. When selections are indicated by coded entry, the code associated with each option shall be included on the display in some consistent manner.

5.14.4.2.10 Keyed codes. If menu selections must be made by keyed codes (mnemonics), the options should be coded by the first several letters of their displayed labels rather than by more arbitrary numeric codes. In defining the codes, however, they should not duplicate any other user function codes.

5.14.4.2.11 Position in structure. When menu traversal can be accomplished by clearly defined hierarchical paths, the user should be given some indication of the displayed menu's current position in the overall or relevant structure, e.g., an optional display of "path" information or cascading menus. A menu tree showing the menu hierarchy should be included in the user manual or on-line HELP.

5.14.4.2.12 Back menu. When using hierarchical menus, the user shall be able to return to the next higher level by using single key action until the initial, top-level menu or display is reached.

Downloaded from http://www.everyspec.com on 2010-01-26T2:50:27.

5.14.4.2.13 Return to top level. A function shall be provided to directly recall the initial, top-level menu or display without stepping through the menu or display hierarchy.

5.14.4.3 Form filling.

5.14.4.3.1 Use. Form filling interactive control may be used where some flexibility in data to be entered is needed and where the users will have moderate training. A form-filling dialogue should not be used when the computer must handle multiple types of forms and the computer response is slow.

5.14.4.3.2 Grouping. Displayed forms shall be arranged to group related items together.

5.14.4.3.3 Format and content consistency. The format and content of displayed forms shall duplicate in every major parameter the (paper) form it is intended to represent. The displayed form shall require a response for every data entry field; advance through a field (i.e., leave blank) for which no entry is desired will require an explicit action such as "TAB" or "ENTER" keystrokes.

5.14.4.3.4 Distinctiveness of fields. Fields or groups of fields shall be separated by spaces, lines, or other delineation cues. Required fields shall be distinguished from optional fields.

5.14.4.3.5 Field labels. Field labels shall be distinctively presented such that they can be distinguished from data entry. Labels for data entry fields shall incorporate additional cueing of data format where the entry is made up of multiple inputs, e.g., DATE (MM/DD/YYYY): __/__/__.

5.14.4.3.6 Cursor. A displayed cursor shall be positioned by the system at the first data entry field when the form is displayed. The cursor shall be advanced by a tab key to the next data entry field when the user has completed entry of the current field or shall automatically move to the next field when the end of the field is reached.

5.14.4.3.7 Entry length indication. The maximum acceptable length for variable length fields shall be indicated.

5.14.4.3.8 Overwriting. Data should not be entered by overwriting a set of characters in a field (such as a default).

5.14.4.3.9 Unused underscores. When an item length is variable, the user shall not have to remove unused underscores.

5.14.4.3.10 Dimensional units. When a consistent dimensional unit is used in a given entry field, the dimensional unit shall be provided by the computer. When the dimensional unit varies for a given field, it should be provided, or selected, by the user.

5.14.4.3.11 User omissions. When required data entries have not been input, the omission shall be indicated to the user and either immediate or delayed input of the missing items should be allowed. Delayed entry should be avoided; however, if it is necessary, the user should be required to designate the field to indicate that the missing item is delayed, not overlooked.

5.14.4.3.12 Non-entry areas. Non-entry (protected) areas of the display shall be designated and made inaccessible to the user via the cursor.

5.14.4.3.13 Flexible data entry. When multiple data items are entered as a single transaction, the user shall be allowed to re-enter, change, or cancel any item before taking a final ENTER action.

Downloaded from http://www.everyspec.com on 2010-01-26T2:50:27.

5.14.4.3.14 Informative labels. Descriptive wording shall be employed when labeling data fields; use of arbitrary codes shall be avoided.

5.14.4.3.15 Logical order. Where no source document or external information is involved, forms should be designed so that data items are ordered in a logical sequence for input.

5.14.4.3.16 Dialog boxes for control entry. Dialog boxes may be used as an aid for composing complex control entries. For example, for a print request, a displayed form might help a user invoke the various format controls that are available.

5.14.4.4 Fixed function keys. Fixed function key interactive control may be used for tasks that require only a limited number of control inputs or in conjunction with other dialogue types. (See 5.14.2.3)

5.14.4.5 Command language.

5.14.4.5.1 Use. Command language interactive control may be used for tasks that involve a wide range of user inputs and where user familiarity with the system can take advantage of the flexibility and speed of the control technique.

5.14.4.5.2 User viewpoint. A command language shall reflect the user's point of view such that the commands are logically related to the user's conception of what is being done.

5.14.4.5.3 Distinctiveness. Command names shall be distinctive from one another.

5.14.4.5.4 Punctuation. The command language shall contain a minimum of punctuation or other special characters.

5.14.4.5.5 Abbreviations. The user shall be permitted to enter the full command name or an abbreviation for any command of more than 5 characters.

5.14.4.5.6 Standardization. All commands and their abbreviations, if any, shall be standardized.

5.14.4.5.7 Displayed location. Commands shall be entered and displayed in a standard location on the display.

5.14.4.5.8 Command prompts. The user shall be able to request prompts, as necessary, to determine required parameters or available options for an appropriate next command entry.

5.14.4.5.9 Complexity. The command language should be programmed in layers of complexity such that the basic layer will allow the inexperienced user to control a transaction. As this person's skill increases, the command language should allow skipping from basic to more advanced layers to meet the user's current needs.

5.14.4.5.10 User definition of macro commands. The programming shall not accept a user designated macro name that is the same as an existing command name (“reserved keyword").

5.14.4.5.11 Standard techniques for command editing. Users shall be allowed to edit erroneous command entries with the same techniques that are employed to edit data entries.

5.14.4.5.12 Destructive commands. If a command entry may have disruptive consequences, the user shall be required to review and confirm a displayed interpretation of the command before it is executed.

Downloaded from http://www.everyspec.com on 2010-01-26T2:50:27.

5.14.4.6 Question and answer.

5.14.4.6.1 Use. Question-and-answer dialogues may be used for routine data entry tasks where data items are known and their ordering can be constrained, where users will have little or no training, and where the computer is expected to have medium response speed.

5.14.4.6.2 Questions displayed separately. Each question should be displayed separately in question-and-answer dialogues; users should not be required to answer several questions at once.

5.14.4.6.3 Recapitulating prior answers. When a series of computer-posed questions are interrelated, answers to previous questions should be displayed when those will provide context to help a user answer the current question.

5.14.4.6.4 Source document capability. When questions prompt entry of data from a source document, the question sequence shall match the data sequence in the source document.

5.14.4.7 Query language.

5.14.4.7.1 Use. Query language dialogue should be used for tasks emphasizing unpredictable information retrieval (as in many analysis and planning tasks), with moderately trained users.

5.14.4.7.2 Natural organization of data. Query languages should reflect a data structure or organization perceived by users to be natural. For example, if a user supposes that all data about a particular topic are stored in one place, then the query language should permit such data to be retrieved by a single query, even though various data may be stored in different computer files.

5.14.4.7.3 Coherent representation of data organization. A single representation of the data organization for use in query formulation should be established, i.e., the user should not necessarily need to know if different queries will access different data bases over different routes.

5.14.4.7.4 Task-oriented wording. The wording of a query should simply specify what data are requested; a user should not have to tell the computer how to find the data.

5.14.4.7.5 Logic to link queries. The query language should be designed to include logic elements that permit users to link (e.g., "and," "or") sequential queries as a single entry.

5.14.4.7.6 Confirming large-scale retrieval. If a query will result in a large-scale data retrieval, the user shall be required to confirm the transaction or take further action to narrow the query before processing.

5.14.4.8 Graphic interaction.

5.14.4.8.1 Use. Graphic interaction as a dialogue may be considered for use by casual users to provide graphic aids as a supplement to other types of interactive control.

5.14.4.8.2 Iconic menus. When system users have different linguistic backgrounds, graphic menus may be used which display icons to represent the control options. Where the system is intended for use by foreign military personnel, icon design shall be consistent with applicable cultural and ethnic variables to ensure comprehension and to avoid potential offense.

5.14.4.8.3 Supplementary verbal labels. Where icons are used to represent control actions in menus, verbal labels shall be displayed, or made available for display, with each icon to help assure that its intended meaning will be understood.

Downloaded from http://www.everyspec.com on 2010-01-26T2:50:27.

5.14.5 Feedback.

5.14.5.1 Use. Feedback shall be provided which presents status information, confirmation, and verification throughout the interaction.

5.14.5.2 Stand-by. When system functioning requires the user to stand-by, a WORKING, BUSY, or WAIT message or appropriate icon should be displayed until user interaction is again possible. Where the delay is likely to exceed 15 seconds, the user should be informed. For delays exceeding 60 seconds, a count-down display should show delay time remaining (see also 5.15.8).

5.14.5.3 Process outcome. When a control process or sequence is completed or aborted by the system, positive indication shall be presented to the user concerning the outcome of the process and the requirements for subsequent user action.

5.14.5.4 Input confirmation. Confirmation shall not cause displayed data removal.

5.14.5.5 Current modes. When multiple modes of operation exist, a means should be provided to remind the user of the current mode.

5.14.5.6 Highlighted option selection. Any displayed message or datum selected as an option or input to the system shall be highlighted to indicate acknowledgment by the system.

5.14.5.7 User input rejection. If the system rejects a user input, feedback shall be provided to indicate the reason for rejection and the required corrective action. Feedback should be self explanatory.

5.14.5.8 Feedback message content. Users shall not be required to translate feedback messages by use of reference system or code sheets. Abbreviations should be avoided.

5.14.5.9 Time-consuming processes. The system shall give warning information when a command is invoked which will be time consuming or expensive to process.

5.14.6 Prompts.

5.14.6.1 Use. Prompts and help instructions shall be used to explain commands, error messages, system capabilities, display formats, procedures, and sequences and to provide data. Prompting should conform to the following:

a. When operating in special modes, the system should display the mode designation and file(s) being processed.

b. Before processing any user requests which would result in extensive or final changes to existing data, the system should require user confirmation.

c. When missing data are detected, the system shall prompt the user.

d. When data entries or changes will be nullified by an abort action, the user should be requested to confirm the abort.

e. Neither humor nor admonishment should be used in structuring messages; the dialog should be strictly factual and informative for the user.

f. Error messages should appear as close as possible to the user entry that caused the message.

Downloaded from http://www.everyspec.com on 2010-01-26T2:50:27.

g. If a user repeats an entry error, the second error message should be revised to include a noticeable change so that the user may be certain that the computer has processed the attempted correction.

5.14.6.2 Standard display. Prompting messages shall be displayed in a standardized area of the displays.

5.14.6.3 Explicit prompts. Prompts and help instructions for system controlled dialogue shall be explicit and the user shall not be required to memorize lengthy sequences or refer to secondary written procedural references.

5.14.6.4 Prompt clarity. Prompts shall be clear and understandable. They shall not require reference to coding schemes or conventions which may be unfamiliar to occasional users.

5.14.6.5 Definitions. A dictionary of abbreviations and codes shall be available on-line. Definitions of allowable options and ranges of values should be displayable at the user's request.

5.14.6.6 Consistent terminology. On-line documentation, off-line documentation, and help instructions shall use consistent terminology.

5.14.6.7 User confirmation. User acceptance of stored data or defaults shall be possible by a single confirming keystroke.

5.14.7 Default.

5.14.7.1 Workload reduction. Default values shall be used to reduce user workload. Currently defined default values should be displayed automatically in their appropriate data fields with the initiation of a data entry transaction and the user shall indicate acceptance of the default.

5.14.7.2 User selection. The user should have the option of generating default values based on operational experience if the systems designer cannot predefine appropriate values.

5.14.7.3 Default substitution. The user shall be able to replace any default value during a given transaction without changing the default definition.

5.14.7.4 Defaults for sequential entries. Where a series of default values have been defined for a data entry sequence, the experienced user shall be allowed to default all entries or to default until the next required entry.

5.14.8 Error management/data protection.

5.14.8.1 Error correction. Where users are required to make entries into a system, an easy means shall be provided for correcting erroneous entries. The system shall permit correction of individual errors without requiring re-entry of correctly entered commands or data elements.

5.14.8.2 Early detection. A capability should be provided to facilitate detection and correction of errors after keying in, but before entering into the system. While errors should be detected early, error checking should occur at logical data entry breaks, e.g., at the end of data fields rather than character-by-character, in order to avoid disrupting the user.

5.14.8.3 Internal software checks. User errors should be minimized by use of software checks of user entries for validity of item, sequence of entry, completeness of entry, and range of value.

Downloaded from http://www.everyspec.com on 2010-01-26T2:50:27.

5.14.8.4 Critical entries. The system shall require the user to acknowledge critical entries prior to their being implemented by the system. An explicitly labeled CONFIRM function key, different from the ENTER key or confirm yes/no prompt, should be provided for user confirmation of control and data entries that have been questioned by the computer.

5.14.8.5 Error message content. Error messages shall be constructive and neutral in tone, avoiding phrases that suggest a judgment of the user's behavior. The error messages shall reflect the user's view, not that of the programmer. Error messages should be appropriate to the user's level of training, be as specific as possible to the user's particular application, and describe a way to remedy, recover, or escape from the error situation.

5.14.8.6 Error recovery and process change (multi-level "undo"). The user shall be able to (a) stop the control process at any point in a sequence as a result of indicated error or as an option and (b) return easily to previous levels in multi-step processes in order to nullify an error or to effect a desired change.

5.14.8.7 Diagnostic information. Error messages shall explicitly provide as much diagnostic information and remedial direction as can be inferred reliably from the error condition. Where clear inference is not possible, probable helpful inference(s) may be offered.

5.14.8.8 Correction entry and confirmation. When the user enters correction of an error, such corrections shall be implemented by an explicit action by the user (e.g., actuation of an ENTER key). All error corrections by the user shall be acknowledged by the system, either by indicating that a correct entry has been made or by another error message.

5.14.8.9 Spelling errors. Spelling and other common errors shall not produce valid system commands or initiate transactions different from those intended. When possible, the system shall recognize common misspellings of commands and execute the commands as if spelling had been correct. Computer-corrected commands, values, and spellings shall be displayed and highlighted for user confirmation.

5.14.8.10 Errors in stacked commands. To prompt for corrections of an error in stacked commands, the system shall display the stacked sequence with the error highlighted. Where possible, a procedure shall be provided to correct the error and salvage the stack.

5.14.8.11 Display of erroneous entries. A computer-detected error, as well as the error message, shall be continuously displayed until the error is corrected.

5.14.8.12 HELP. In addition to explicit error management aids, (labels, prompts, advisory messages) and implicit aids (cueing), users should be able to obtain further on-line guidance by requesting HELP. Following the output of a simple error message, users should be permitted to request a more detailed discussion at levels of increasing detail.

5.14.8.12.1 Standard action to request HELP. A simple, standard action that is always available should be provided to request HELP.

5.14.8.12.2 Multilevel HELP. When an initial HELP display provides only summary information, more detailed explanations should be provided in response to repeated user requests for HELP.

5.14.8.12.3 Browsing HELP. Users should be permitted to browse through on-line HELP displays, just as they would through a printed manual, to gain familiarity with system functions and operating procedures.

Downloaded from http://www.everyspec.com on 2010-01-26T2:50:27.

5.14.8.13 Data security. Data shall be protected from unauthorized use, potential loss from equipment failure, and user errors.

5.14.8.13.1 Automated security measures. Automated measures shall be provided to minimize data loss from intruders in a system or from errors by legitimate users.

5.14.8.13.2 Warning of threats to security. Computer logic shall be provided that will generate messages and/or alarm signals in order to warn users of attempted intrusion by unauthorized users.

5.14.8.13.3 Segregating real from simulated data. When simulated data and system functions are provided (perhaps for user training), real data shall be protected and real system use shall be clearly distinguished from all simulated operations.

5.14.8.13.4 Display of simulated data. In applications where either real or simulated data can be displayed, a clear indication of simulated data shall be included as part of the classification label.

5.14.8.13.5 Displayed security classification. When displayed data are classified for security purposes, a prominent indication of security classification level shall be labeled in each display.

5.14.8.13.6 User identification. User identification procedures shall be as simple as possible, consistent with adequate data protection. The password shall not be echoed on the display (see 5.14.1.2). An asterisk (*) will be displayed for each character when inputting secure passwords during log-on.

5.14.8.13.7 Choice of passwords. When passwords are required, users shall be allowed to choose their own passwords since a password chosen by a user will generally be easier for that individual to remember. Guidelines for password selection shall be given so that users will not choose easily guessable ones.

5.14.8.13.8 Changing passwords. Users should be allowed to change passwords whenever they choose; all passwords should be changed at periodic intervals (not to exceed six months).

5.14.9 System response time. Maximum system response times for real-time systems (e.g., fire control systems, command and control systems) shall not exceed the values of Table XXII. Non-real-time systems may permit relaxed response times. If computer response time will exceed 15 seconds, the user should be given a message indicating that the system is processing.

5.14.10 Other requirements.

5.14.10.1 Overlays. Mechanical overlays, such as coverings over the keyboard or transparent sheets placed on the display, shall be avoided.

5.14.10.2 Hard copy. The user shall have the capability to obtain a paper copy of the exact contents of the alphanumeric or digital graphic display in those systems where (a) mass storage is restricted, (b) mass stored data can be lost by power interruption, or (c) record keeping is required.

5.14.10.2.1 Display print. The user shall be able to print a display by simple request, (e.g., PRINT-SCREEN) without having to take a series of other actions first, such as calling for the display to be filed, specifying a filename, then calling for a print of that named file.

5.14.10.2.2 Print page. The user shall have the capability to request printing of a single page, or sequence of pages, by specifying the page numbers.

Downloaded from http://www.everyspec.com on 2010-01-26T2:50:27.

5.14.11 Data and message transmission. See 5.14.8.13.1 and 5.14.8.13.2.

5.14.11.1 Functional integration. Data transmission functions shall be integrated with other information handling functions within a system. A user should be able to transmit data using the same computer system and procedures used for general entry, display and other processing of data.

5.14.11.2 Consistent procedures. Procedures for preparing, sending and receiving data and messages shall be consistent from one transaction to another, and consistent with procedures for other information handling tasks.

5.14.11.3 Minimal memory load on users. The data transmission procedures should minimize memory load on the users by providing computer aids for automatic insertion of standard information, such as headers and distribution lists.

5.14.11.4 Interrupt. Users should be allowed to interrupt message preparation, review, or disposition and then resume any of those tasks from the point of interruption.

Table XXII. **Maximum Acceptable System Response Times**

System Interpretation	Response Time Definition	Time (Secs)
Key Response	Key depression until positive response, e.g., "click"	0.1
Key Print	Key depression until appearance of character	0.2
Page Turn	End of request until first few lines are visible	1.0
Page Scan	End of request until text begins to scroll	0.5
XY Entry	From selection of field until visual verification	0.2
Function	From selection of command until response	2.0
Pointing	From input of point to display point	0.2
Sketching	From input of point to display of line	0.2
Local Update	Change to image using local data base, e.g., new menu list from display buffer	0.5
Host Update	Change where data is at host in readily accessible form, e.g., a scale change of existing image	2.0
File Update	Image update requires an access to a host file	10.0
Inquiry (Simple)	From command until display of a commonly used message	2.0
Inquiry (Complex)	Response message requires seldom used calculations in graphic form	10.0
Error Feedback	From entry of input until error message appears	2.0

Downloaded from http://www.everyspec.com on 2010-01-26T2:50:27.

5.14.11.5 Stored message forms. Where message formats conform to a defined standard or are predictable in other ways, prestored forms shall be provided to aid users in message preparation.

5.14.11.6 Incorporate existing files. Users should be allowed to incorporate an existing data file in a message, or to combine several files into a single message for transmission and to combine stored data with new data when preparing messages for transmission. It should not be necessary to re-enter any data already entered for other purposes.

5.14.11.7 Addresses.

5.14.11.7.1 Prompting address entry. When users must specify the address for messages, prompting should be provided to guide the user in the process.

5.14.11.7.2 Address directory. Users should be provided with an on-line directory showing all acceptable forms of message addressing for each destination in the system, and for links to external systems.

5.14.11.7.3 Aids for directory search. Computer aids should be provided so that a user can search an address directory by specifying a complete or partial name. It should also be possible to extract selected addresses from a directory for direct insertion into a header in order to specify the destination(s) for a message.

Downloaded from http://www.everyspec.com on 2010-01-26T2:50:27.

5.15 Visual display terminals (VDTs). Where a VDT is used only for text processing, data entry, and data inquiry applications in an office environment or equivalent, the VDT, associated furniture, and environments in which the VDT is placed shall conform to ANSI/HFS 100; however, where such criteria are not specified by ANSI/HFS 100, the VDT, associated furniture, and environments shall conform to applicable provisions herein.

Downloaded from http://www.everyspec.com on 2010-01-26T2:50:27.

6. NOTES

(This section contains information of a general or explanatory nature which may be helpful, but is not mandatory.)

6.1 Intended use. This standard is intended for use as design criteria for military systems, equipment, and facilities, cited contractually in system specifications and elsewhere, and for use as a basis for structuring that part of human factors testing where design characteristics are assessed for purposes of acceptance. It is not intended for use to express binding requirements in conceptual and other early acquisition phases. The standard may be applied to traditional, as well as non-developmental item (NDI) acquisitions.

6.2 Issue of DoDISS. When this standard is used in acquisition, the applicable issue of the DoDISS must be cited in the solicitation (see 2.2 and 2.3).

6.3 Subject term (key word) listing.

Aerospace Vehicles
Anthropometry
Controls
Control/display integration
Design
Displays
Environment
Ergonomics
Hazards
Human Factors
Human-machine interface
Labeling
Maintainer
Safety
Remote handling
User-computer interface
Vehicles
Workspace

6.4 Changes from previous issue. The margins of this standard are marked with vertical lines (or asterisks) to indicate where changes or additions (or deletions) from the previous issue were made. (Marginal notations do not appear for changes to tables.) This was done as a convenience only and the Government assumes no liability whatsoever for any inaccuracies in these notations. Bidders and contractors are cautioned to evaluate the requirements of this document based on the entire content irrespective of the marginal notations and relationship to the last previous issue.

Downloaded from http://www.everyspec.com on 2010-01-26T2:50:27.

INDEX

Abbreviations
- command names ---------- 5.14.4.5.5
- display content ---------- 5.14.3.2.3
- labels ---------- 5.5.3.2
- user-computer interface ---------- 5.14.2.1.9

Access opening and covers ---------- 5.9.9
Access, physical ---------- 5.9.9.4
Access, simultaneous (control/display integration) ---------- 5.1.1.6
Access (rear) ---------- 5.9.4.4
Access, visual ---------- 5.9.9.5
Accessibility, design for maintainer ---------- 5.9.4
Acoustic environment, compatibility ---------- 5.3.4.4.2
Acoustical environment, audio signals ---------- 5.3.3.2.1
Acoustical noise ---------- 5.8.3
Addresses ---------- 5.14.11.7
Adjustments, screwdriver, blind ---------- 5.9.3.2
Air conditioning ---------- 5.8.1.3
Alarms/Alerts/Warnings
- audio warnings ---------- 5.3.2
- false (audio) ---------- 5.3.1.9.1
- hazard alerting devices ---------- 5.13.4.1
- interlocks ---------- 5.13.5.1
- settings (user-computer interface) ---------- 5.14.3.8.7
- visual displays ---------- 5.2.1.1

Anthropometry ---------- 5.6
Armrests, seats ---------- 5.7.3.4.5
Audio displays ---------- 5.3
Audio displays, user-computer interface ---------- 5.14.3.8
Audio warnings
- displays/signals ---------- 5.3.2
- characteristics ---------- 5.3.3
- controls ---------- 5.3.6

Automotive subsystems ---------- 5.12.9
Back packing aids ---------- 5.11.1.2.4
Backrest
- Seats ---------- 5.7.3.4.3
- vehicle seats (angle) ---------- 5.12.2.4

Ball control ---------- 5.4.3.2.4
Bar graphs ---------- 5.14.3.6.30
Battery terminals, vehicle ---------- 5.12.9.1.4
Batteries, vehicle ---------- 5.13.7.1.8
Binoculars/bioculars ---------- 5.11.3.12
Body access, whole ---------- 5.7.7.3
Body vibration, whole ---------- 5.8.4.1
Boresighting, optical equipment ---------- 5.11.3.17.7
Braces, equipment mounting ---------- 5.9.12.9
Bracketing ---------- 5.1.4.5
Brake controls, trailers ---------- 5.12.7.1.1
Brow pads, optical instruments ---------- 5.11.3.13.2
Browsing help ---------- 5.14.9.12.3
Cable ---------- 5.9.13.5
Calibration information, scale indicators ---------- 5.2.3.1.9

Downloaded from http://www.everyspec.com on 2010-01-26T2:50:27.

Carrying, lifting and ---------- 5.9.11
Carrying, portability/man-transportability ---------- 5.11.1
Carbon monoxide ---------- 5.13.7.4.2
Cases ---------- 5.9.7
Cathode ray tube (CRT) displays ---------- 5.2.4
Caution signal, audio ---------- 5.3.2.3
Caution signal, audio, control ---------- 5.3.6.4.3
Chains, safety, platform ---------- 5.13.6.2
Characters, label ---------- 5.5.5
Characters, shifted, user-computer interface ---------- 5.14.2.4.5
Circuit boards, printed ---------- 5.9.18
Circuit breaker (and fuses) ---------- 5.9.17.2
Circuit failure, display ---------- 5.2.1.3.7
Circuit test, audio displays ---------- 5.3.1.9.3
Circular scale
  fixed pointer design ---------- 5.2.3.3
  fixed pointer movement relationships ---------- 5.1.3.5
  fixed scale design ---------- 5.2.3.2
  fixed scale movement relationships ---------- 5.1.3.3
Clamps, cable ---------- 5.9.13.2
Clothing, protective, placards ---------- 5.13.2.4
Codes, keyed (menu selection) ---------- 5.14.4.2.11
Coding (also see specific control, display, or hardware item)
  audio signals, discriminability ---------- 5.3.4.3.2
  color, choice of ---------- 5.2.3.1.10.3
  color, controls ---------- 5.4.1.4.5
  controls ---------- 5.4.1.4
  control-to-display ---------- 5.4.1.4.5.3
  display, user-computer interface ---------- 5.14.3.3
  flash ---------- 5.14.3.3.2
  location ---------- 5.4.1.4.2
  mounting items ---------- 5.9.12.5
  objectives ---------- 5.2.1.5.1
  option, menu selection ---------- 5.14.4.2.10
  replaceable items ---------- 5.9.12.5
  size, control ---------- 5.4.1.4.3
  standardization ---------- 5.2.1.5.3
  symbol and size, display ---------- 5.14.3.3.6
  symbology ---------- 5.2.1.5.4
  techniques ---------- 5.2.1.5.2
  viewing equipment ---------- 5.10.4.5
  visual displays ---------- 5.2.1.5
Collimation ---------- 5.11.3.17.4
Color coding (also see specific control, display, or hardware item)
  Controls ---------- 5.4.1.4.5
  Displays ---------- 5.14.3.3.7
  transilluminated displays ---------- 5.2.2.1.13
Color contrast ---------- 5.2.1.5.6.4
Color differences ---------- 5.2.1.5.6.5
Color selection ---------- 5.2.1.5.6.2
Color, surface, Air Force ---------- 5.7.8.3
Color, surface, Army ---------- 5.7.8.1
Color, surface, Navy ---------- 5.7.8.2
Comfort zone ---------- 5.8.1.7
Command language, interactive control ---------- 5.14.4.5

Downloaded from http://www.everyspec.com on 2010-01-26T2:50:27.

Commands, text/program editing ---------- 5.14.3.7.4
Computer
Failure ---------- 5.14.1.7
failure indication ---------- 5.9.17.1
response ---------- 5.14.1.2
Conductors ---------- 5.9.13
Connectors ---------- 5.9.14
Connectors, fluid hazards ---------- 5.13.7.3
Console, special purpose ---------- 5.7.5
Console, standard ---------- 5.7.4
Control, linear, continuous adjustment ---------- 5.4.3.2
Control, rotary, continuous adjustment ---------- 5.4.2.2
Contrast (see specific application, control, display, or hardware item)
Control/Display integration
general criteria ---------- 5.1.1
movement ratio ---------- 5.1.4
movement relationship ---------- 5.1.3
position relationship ---------- 5.1.2
Control placement
lifting vehicles ---------- 5.12.8.3
primary controls ---------- 5.4.1.3.3
seated, normal ---------- 5.7.3.9
seated, special ---------- 5.7.3.10
standing, normal ---------- 5.7.2.4
standing, special ---------- 5.7.2.5
Controls (also see specific control, e.g., pedal, handwheel, ball control)
accidental actuation, prevention of ---------- 5.4.1.8
adjustment, design for maintainer ---------- 5.9.3
blind operation ---------- 5.4.1.7
dead man ---------- 5.4.1.8.5
detented, general ---------- 5.4.1.1.4
direction of movement ---------- 5.4.1.2
discrete linear ---------- 5.4.3.1
emergency use ---------- 5.1.2.3.8
feedback ---------- 5.1.1.4
feedback, computer ---------- 5.14.2.1.2
general criteria ---------- 5.4.1
handwear, compatibility with ---------- 5.4.1.6
high force ---------- 5.4.4
miniature ---------- 5.4.5
multirotation ---------- 5.4.1.1.3
rotary, discrete ---------- 5.4.2.1
text program editing ---------- 5.14.3.7
vehicle, ground/shipboard operation and maintenanc---------- 5.12.3
voice communication equipment ---------- 5.3.10
Counters ---------- 5.1.4.8
Covers, access ---------- 5.9.9
Covers, equipment ---------- 5.9.8
Cranes, material handling and construction ---------- 5.12.8
Cranks ---------- 5.4.2.2.4
Cranks, size, tracking equipment ---------- 5.11.2.2
Cursor distinctiveness, graphic displays ---------- 5.14.3.6.9
Cursor position, graphic displays ---------- 5.14.3.6.7
Cursors, user-computer interface ---------- 5.14.2.1.8
Cushions, seats ---------- 5.7.3.4.4

Downloaded from http://www.everyspec.com on 2010-01-26T2:50:27.

Dark adapation ---------- 5.2.1.5.6.3
Data and message transmission ---------- 5.14.11
Data entry, user-computer interface ---------- 5.14.2.1
Data security ---------- 5.14.8.13
De-emphasis ---------- 5.3.8.3
Defaults, user-computer interface ---------- 5.14.7
Directional controllers ---------- 5.14.2.6
Direct view ---------- 5.2.5.2
Display (also see specific display, e.g., CRT, printer, LED)
    Audio ---------- 5.3
    audio, user-computer interface ---------- 5.14.3.8
    complexity and precision ---------- 5.1.1.3
    content ---------- 5.2.1.3.1
    content, user-computer interface ---------- 5.14.3.2
    contrast ---------- 5.2.1.2.3
    control of displayed information ---------- 5.2.5.1.5
    digital, numeric ---------- 5.2.1.3.13
    emergency use ---------- 5.1.2.3.8
    failure clarity ---------- 5.2.1.3.6
    format, user-computer interface ---------- 5.14.3.1
    freeze ---------- 5.14.3.4.3
    graphic ---------- 5.14.3.6
    grouping ---------- 5.2.1.4.6
    illumination ---------- 5.2.1.2
    illumination levels ---------- 5.8.2
    importance ---------- 5.2.1.4.9
    information density ---------- 5.14.3.2.2
    labeling ---------- 5.5.6.2.3
    movement, range of ---------- 5.1.4.2
    placement, seated, normal ---------- 5.7.3.6
    placement, seated, special ---------- 5.7.3.7
    placement, standing, normal ---------- 5.7.2.2
    placement, standing, special ---------- 5.7.5.3
    position ---------- 5.1.2
    simultaneous use ---------- 5.1.2.3.3
    time lag ---------- 5.1.3.2
    transilluminated ---------- 5.2.2
    update rate ---------- 5.14.3.4.2
    visual ---------- 5.2
Doors
    emergency, safety ---------- 5.13.4.2
    ingress and egress ---------- 5.7.7.1
Dot-Matrix/segmented displays ---------- 5.2.6.7
Drain valves, vehicles ---------- 5.12.9.1.1
Dynamic displays ---------- 5.14.3.4.2
Edge rounding ---------- 5.13.5.4
Editing, text/program ---------- 5.14.3.7
Electronic displays ---------- 5.2.1.6
Electroluminescent displays ---------- 5.2.6.8
Electromagnetic pulse (EMP) hardening ---------- 4.11
Elevators ---------- 5.7.6.7
Environment ---------- 5.8
Error management/data protection ---------- 5.14.8
Error proof design ---------- 5.9.1.8
Escape, emergency exit ---------- 5.13.4.2

Downloaded from http://www.everyspec.com on 2010-01-26T2:50:27.

Existence load ---------- 5.11.1
Eye- and head based displays ---------- 5.4.8
Eyecups ---------- 5.11.3.13
Fail-safe design ---------- 4.5
Faint signals ---------- 5.2.1.6.2.4
Fasteners ---------- 5.9.10
Fighting load ---------- 5.11.1
Filters
    automotive subsystems ---------- 5.12.9.1.2
    optical instruments ---------- 5.11.3.14.1
    speech reception ---------- 5.3.8.2.2
Finger-thumb strength, high-force controls ---------- 5.4.4.2
Flags ---------- 5.2.6.5
Floors, workspace ---------- 5.7.1.3
Foot-operated controls ---------- 5.4.1.8.6
Foot-operated switches ---------- 5.4.3.1.2
Footholds, lifting vehicles ---------- 5.12.8.8
Forklift, vehicle ---------- 5.12.8
Forklift, visibility---------- 5.12.5.9
Form filling ---------- 5.14.4.3
Function allocation ---------- 4.3
Fuses and circuit breakers ---------- 5.9.17.2
Graphic panels ---------- 5.2.2.4.2
Grid and stylus devices ---------- 5.4.3.2.5
Ground workspace design ---------- 5.7
Guardrails ---------- 5.7.6.1.3
Handholds, lifting vehicles ---------- 5.12.8.8
Handles and grasp areas ---------- 5.9.11.5
Handling, unit design for efficient ---------- 5.9.11
Handrails, platform ---------- 5.13.6.2
Handrails, stairs/ladders/ramps ---------- 5.7.6.1.3
Handwheels ---------- 5.4.2.2.5
Hatches, workspace design ---------- 5.7.7.2
Hazards
    electrical ---------- 5.13.7.1
    fluid ---------- 5.13.7.3
    general ---------- 5.13.1
    general equipment ---------- 5.13.5
    general workspace ---------- 5.13.4
    mechanical ---------- 5.13.7.2
    platform ---------- 5.13.6
    radiation ---------- 5.13.7.5
    safety labels and placards ---------- 5.13.2
    toxic ---------- 5.13.7.4
Headrests ---------- 5.11.3.13
Headset, audio warning signals ---------- 5.3.4.2.4
Headset, speech reception ---------- 5.3.8.4
Heads up displays ---------- 5.2.6.12
Heating, general ---------- 5.8.1
Heating, vehicles ---------- 5.12.6
Helmut mounted displays ---------- 5.2.6.13
Help ---------- 5.14.8.12
Humidity ---------- 5.8.1.4
Iconic menus ---------- 5.14.4.8.2
Illuminance ---------- 5.8.2

Downloaded from http://www.everyspec.com on 2010-01-26T2:50:27.

Image polarity ---------- 5.2.4.2.5
Inclinators ---------- 5.7.6.7
Indicator covers ---------- 5.2.2.1.12.5
Indicator lights, simple ---------- 5.2.2.3
Ingress and egress, aerospace vehicles ---------- 5.14.3
Ingress and egress, workspace ---------- 5.7.7
Intelligibility, speech ---------- 5.3.14
Interactive control, user-computer interface ---------- 5.14.4
J-handles ---------- 5.4.9
Jitter ---------- 5.2.1.6.3
Joystick, displacement (Isotonic) ---------- 5.4.3.2.2
Joystick, isometric ---------- 5.4.3.2.3
Key operated switches (KOS) ---------- 5.4.2.1.2
Keyboard
    cursor control ---------- 5.14.1.8.6
    data entry ---------- 5.14.2.2
    general ---------- 5.4.3.1.3
    lockout ---------- 5.14.4.1.1
Keys
    fixed-function, dedicated ---------- 5.14.2.3
    fixed function, interactive control ---------- 5.14.4.4
    non-active ---------- 5.14.2.3.5
    variable function ---------- 5.14.2.4
Kick space ---------- 5.7.1.1
Knee room ---------- 5.7.3.5
Knobs
    adjustments ---------- 5.9.3.1
    design characteristics ---------- 5.4.2.2.1
    ganged ---------- 5.4.2.2.2
    setting, coarse ---------- 5.1.4.3
    setting, fine ---------- 5.1.4.4
Label/Labeling (also see specific application or hardware item, e.g., user-computer interface)
    character design ---------- 5.5.5
    contents ---------- 5.5.3
    equipment labeling ---------- 5.5.6
    general ---------- 5.5.1
    location ---------- 5.5.2
    orientation ---------- 5.5.2
    qualities ---------- 5.5.4
Ladders
    fixed ---------- 5.7.6.4
    telescoping, mechanical hazards ---------- 5.13.7.2.2
Large screen displays ---------- 5.2.5
Leg strength ---------- 5.4.4.3
Legend lights ---------- 5.2.2.2
Legend switches ---------- 5.4.3.1.5
Levers
    design characteristics ---------- 5.4.3.2.1
    setting, coarse ---------- 5.1.4.6
    setting, two-dimensional ---------- 5.1.4.7
Lifting, carrying and ---------- 5.9.11.1
Light emitting diodes ---------- 5.2.6.6
Light pen, data entry ---------- 5.14.2.5
Light pen, tracking ---------- 5.4.3.2.7

Downloaded from http://www.everyspec.com on 2010-01-26T2:50:27.

Light-emitting diodes (LEDs) ---------- 5.2.6.6
Lighting, display recommendations ---------- 5.8.2
Linear controls ---------- 5.4.3
Linear scales
fixed pointer ---------- 5.1.3.6
moving pointer ---------- 5.1.3.4
scale indicators ---------- 5.2.3.1.4
Lists, tabulator date, user-computer interface ---------- 5.14.3.5.6
Liquid crystals ---------- 5.2.6.9
Log-off procedures ---------- 5.14.1.6
Log-on procedures ---------- 5.14.1.5
Lubrication ---------- 5.9.5
Luminance ---------- 5.2.4.2.1
Maintainer, design for ---------- 5.9
Manipulators, remote handling equipment ---------- 5.10.3
Man-transportability ---------- 5.11.1
Manufacturing tolerances ---------- 1.5
Menu selection, interactive control ---------- 5.14.4.2
Metric system equivalents ---------- Foreword
Microphone, noise-cancelling ---------- 5.3.7.3
Modular replacement ---------- 5.9.1.3
Motion sickness ---------- 5.8.4.1.1.5
Mounting of items within units ---------- 5.9.2
Mounting , design for maintainer ---------- 5.9.12
Mouse ---------- 5.4.3.2.6
Moving pointer display, fixed scale ---------- 5.2.3.2
Moving tape display ---------- 5.2.3.3.6
Moving scale display, fixed pointer---------- 5.2.3.3
NBC survivability ---------- 4.10
Noise, acoustical ---------- 5.8.3
Noise shields, speech transmission equipment ---------- 5.3.7.3
Numeral characteristics ---------- 5.2.6.2.7
Optical instruments (and related equipment) ---------- 5.11.3
Padding, seat, vehicle ---------- 5.12.2.6
Pan, seat, vehicle ---------- 5.12.2.5
Panel
angle, horizontal wrap-around console ---------- 5.7.5.1.2
assemblies, transilluminated ---------- 5.2.2.4
contrast, control ---------- 5.4.1.4.5.4
dimming, field use ---------- 5.2.1.2.1.3
division, vertical/stacked segments ---------- 5.7.6.2.1
large single pictorial graphic ---------- 5.2.2.4.2
removal, mounting ---------- 5.9.12.11
separate ---------- 5.1.2.3.6
width, horizontal wrap-around console ---------- 5.7.5.1.1
Passenger compartments, aerospace vehicles ---------- 5.14.2
Peak clipping ---------- 5.3.7.5
Pedals, general ---------- 5.4.3.2.9
Pedals, vehicles ---------- 5.12.3.3
Platforms
Personnel ---------- 5.7.6.6
hazards and safety ---------- 5.13.6
hydraulic ---------- 5.7.7.7
Plotters ---------- 5.2.6.4
Plugs, quick disconnect ---------- 5.9.14.1

Downloaded from http://www.everyspec.com on 2010-01-26T2:50:27.

Populations, special ---------- 5.6.2.2
Portability ---------- 5.11.1.1
Pre-emphasis ---------- 5.3.7.4
Printed circuit (PC) boards ---------- 5.9.18
Printed circuit (PC) switch controls ---------- 5.4.3.1.9
Printers ---------- 5.2.6.3
Program editing, text ---------- 5.14.6
Pucks ---------- 5.4.3.2.8
Pull force ---------- 5.9.11.4
Push buttons ---------- 5.4.3.1.1
Push force ---------- 5.9.11.4
Push-pull controls, discrete ---------- 5.4.3.1.8
Query language ---------- 5.14.7
Question and answer (U/CI interactive control) ---------- 5.14.4.6
Quiet areas, extreme ---------- 5.8.3.3.5
Racks, mounting, rollout ---------- 5.13.7.5
Ramps, cleating & mixed traffic ---------- 5.7.6
Recorders ---------- 5.2.6.4
Reflected glare ---------- 5.2.1.4.4
Remote controls ---------- 5.4.1.3.5
Remote handling ---------- 5.10
Representational displays ---------- 5.2.6.10
Response time
    interactive control ---------- 5.14.4.1.1
    system ---------- 5.14.9
Reticles, optical instruments ---------- 5.11.3.10
Reverberation time ---------- 5.8.3.4.3
Rocker switches ---------- 5.4.3.1.6
Rotary controls ---------- 5.4.2
Rotary selector switches ---------- 5.4.2.1.1
Rounding, access openings and covers ---------- 5.9.9.4
Rounding, edge ---------- 5.13.5.4
Ruggedness ---------- 4.9
Safety (see “Hazards” for specific subjects) ---------- 5.13
Scales
    circular, fixed pointer ---------- 5.1.3.5
    circular, moving pointer ---------- 5.1.3.3
    linear, fixed pointer ---------- 5.1.3.6
    linear, moving pointer ---------- 5.1.3.4
    reference for adjustment controls ---------- 5.9.3.3
Scale indicators ---------- 5.2.3
Seating
    ground/shipboard vehicles ---------- 5.12.2
    workspace design ---------- 5.7.3.4
Seated operations, workspace design ---------- 5.7.3
Security, data ---------- 5.14.8.13
Sights and reticles, illuminated ---------- 5.11.3.12
Signs ---------- 5.5.5.4.4
Slide switch controls ---------- 5.4.3.1.7
Slides, mounting ---------- 5.9.12.6
Small systems and equipment ---------- 5.11
Speaker-to-listener distance, vs. noise level ---------- 5.8.3.3
Speakers, monitoring ---------- 5.3.8.2.1
Speech displays ---------- 5.3.13
Speech intelligibility ---------- 5.3.14

Downloaded from http://www.everyspec.com on 2010-01-26T2:50:27.

Speech processing, verbal warning signals ---------- 5.3.5.4
Speech reception equipment ---------- 5.3.8
Speech recognition ---------- 5.4.7
Speech transmission equipment ---------- 5.3.7
Stairs
Dimensions ---------- 5.7.6.2
General ---------- 5.7.6
hazards and safety ---------- 5.13.4.3
Standardization, general ---------- 4.2
Standing operations, workspace design ---------- 5.7.2
Steering-
Controls ---------- 5.12.3.2
power failure ---------- 5.4.2.2.5.7
ratio ---------- 5.4.2.2.5.8
wheel shape ---------- 5.4.2.2.5.6
Stereo viewing, remote handling equipment ---------- 5.10.4.7
Stereoscopic displays ---------- 5.2.6.11
Storage space, workspace design ---------- 5.7.1.3.4
Strength, arm/hand/thumb-finger ---------- 5.4.4.2
Strength, leg ---------- 5.4.4.3
Streamers, safety (general equipment) ---------- 5.13.5.5
Tabular data ---------- 5.14.3.5
Tape displays, moving (moving scale indicators) ---------- 5.2.3.3.6
Tapes, printed ---------- 5.2.6.3.8
Telephones
conventional ---------- 5.3.11.1
sound powered ---------- 5.3.11.2
Temperature uniformity ---------- 5.8.1.5
Test equipment ---------- 5.9.16
Test points ---------- 5.9.15
Text/Program editing ---------- 5.14.3.7
Thumbwheel, continuous adjustment ---------- 5.4.2.2.3
Thumbwheel, discrete (detented) ---------- 5.4.2.1.3
Tires ---------- 5.12.9.2
Toggle switch controls ---------- 5.4.3.1.4
Tongue-and-slot catches ---------- 5.9.10.2
Tools
hand, electrically-operated (electrical hazards) ---------- 5.13.7.1.6
insulation of, electrical hazards ---------- 5.13.7.1.1
mounting of field removable items ---------- 5.9.12.2
special, design for maintainer ---------- 5.9.1.2
special, placards ---------- 5.13.2.4
use ---------- 5.9.4.3
Touch screen controls ---------- 5.4.6
Tracking, moving scale indicators ---------- 5.2.3.3.5
Tracking, small systems and equipment ---------- 5.11.2
Trailers ---------- 5.12.7.1
Transilluminated displays, general ---------- 5.2.2.1
Transilluminated panel assemblies ---------- 5.2.2.4
Transmissions, data and messages ---------- 5.14.11
Underlining, display coding ---------- 5.14.3.3.5
User-computer interface ---------- 5.14
Valve controls ---------- 5.4.1.2.4
Valves, drain (automotive) ---------- 5.12.9.1.1
Vans ---------- 5.12.7.2

Downloaded from http://www.everyspec.com on 2010-01-26T2:50:27.

Variable function keys, data entry ---------- 5.14.2.4
Vehicles, operational and maintenance, ground/shipboard---------- 5.12
Ventilation, general ---------- 5.8.1
Ventilation, vehicle ---------- 5.12.6
Vibration, environment ---------- 5.8.4.1
Vibration, visual displays ---------- 5.2.1.4.5
Viewing equipment, remote handling ---------- 5.10.4
Visibility, ground/shipboard vehicles (also see specific application)---------- 5.12.5
Visual display terminals (VDTs) ---------- 5.15
Visual displays ---------- 5.2
Voice communication equipment, controls for ---------- 5.3.10.1
Warning
    Audio ---------- 5.3.2
    devices, audio, controls for ---------- 5.3.6
    displays, seated consoles ---------- 5.7.3.8
    lights, transilluminated displays ---------- 5.2.2
    placards, hazards and safety ---------- 5.13.2.1
    signals, verbal ---------- 5.3.5
    visual displays ---------- 5.2.1.1
Weight, unit design for efficient handling ---------- 5.9.11.3
Winches, automotive subsystems ---------- 5.12.9.4
Windows, windshields ---------- 5.12.5.6
Windshield wipers and washers ---------- 5.12.5.7
Work platforms, hydraulic operated ---------- 5.7.6.7
Workspace design, general ---------- 5.7
Zone, comfort (environment) ---------- 5.8.1.7
3D displays ---------- 5.3.12

Downloaded from http://www.everyspec.com on 2010-01-26T2:50:27.

CONCLUDING MATERIAL

Custodians:
Army - MI
Navy - AS
Air Force - 11

Preparing activity:
Army-MI
(Project HFAC-0088)

Review activities:
Army - AR, AT, AV, CR, EA, GL, MD, MR, PT, TE, TM
Navy - CG, EC, MC, ND, OS, PE, SH, TD
Air Force - 01, 10, 13, 19, 31
OSD - HS, SE
DLS - DH
DISA - DC2
NIMA - MP
NSA - NS

Industry associations and professional societies:
AAMI
AIA
ASTM
EIA
HFES
SAE

Civil Agency Coordinating Activities:
DOT - FAA
NASA - AE
NHTSA - OST

Downloaded from http://www.everyspec.com on 2010-01-26T2:50:27.

STANDARDIZATION DOCUMENT IMPROVEMENT PROPOSAL

INSTRUCTIONS

1. The preparing activity must complete blocks 1, 2, 3, and 8. In block 1, both the document number and revision letter should be given.

2. The submitter of this form must complete blocks 4, 5, 6, and 7, and send to preparing activity.

3. The preparing activity must provide a reply within 30 days from receipt of the form.

NOTE: This form may not be used to request copies of documents, nor to request waivers, or clarification of requirements oncurrent contracts. Comments submitted on this form do not constitute or imply authorization to waive any portion of the referenced document(s) or to amend contractual requirements.

I RECOMMEND A CHANGE:	**1. DOCUMENT NUMBER** MIL-STD-1472F	**2. DOCUMENT DATE (YYYYMMDD)** 19990823

3. DOCUMENT TITLE **HUMAN ENGINEERING**

4. NATURE OF CHANGE *(Identify paragraph number and include proposed rewrite, if possible. Attach extra sheets as needed.)*

5. REASON FOR RECOMMENDATION

6. SUBMITTER

a. NAME *(Last, First, Middle Initial)*	b. ORGANIZATION	
c. ADDRESS *(Include Zip Code)*	d. TELEPHONE (Include Area Code) (1) Commercial (2) AUTOVON *(if applicable)*	**7.DATE SUBMITTED** (YYYYMMDD)

8. PREPARING ACTIVITY

a. NAME U.S. ARMY AVIATION AND MISSILE COMMAND	b. TELEPHONE *Include Area Code)* (1) Commercial (256) 955-0806 (2) AUTOVON 645-0806
c. ADDRESS *(Include Zip Code)* COMMANDER, U.S. ARMY AVIATION AND MISSILE COMMAND, ATTN: AMSAM-RD-SE-TD-ST, REDSTONE ARSENAL, AL 35898-5000	**IF YOU DO NOT RECEIVE A REPLY WITHIN 45 DAYS, CONTACT:** Defense Standardization Program Office (DLSC-LM) 8725 John J. Kingman road, Suite 2533, Ft. Belvoir, VA 22060-2533 Telephone (703) 767-6888 AUTOVON 427-6888