DRAWING NUMBER	SHEET	REV
A CB-L-080D-M039	1	***

REVISIONS			
REV	DESCRIPTION	DATE	APPROVAL

NOTES: UNLESS OTHERWISE SPECIFIED

1. PROPULSION COORDINATE SYSTEMS DEFINED ON SHEET 2.

(2) CONSTRUCTION: Q1 CARBON FIBER FACESHEETS (NEAR ZERO CTE) WITH AL. HONEYCOMB CORE. STANDARD HARDWARE ATTACHMENT USES ALUMINUM DOUBLE FLANGED BUSHINGS (FLANGE IS .045" PROUD OF COMPOSITE SURFACE). OTHER ATTACHMENT METHODS T.B.D.

3. PROPULSION STRUCTURE C.G. TO BE WITHIN .12" OF CENTERLINE ("Z" AXIS). PRINCIPLE AXIS TO BE ALIGNED WITH Z-AXIS.

(3) TOTAL PENETRATIONS ALLOWED T.B.D.. PANEL STIFFNESS IS A DRIVING REQUIREMENT OF STRUCTURE. PENETRATION GUIDELINES ARE: 1. MAINTAIN 2.0" MINIMUM DISTANCE FROM OTHER STRUCTURAL ELEMENTS 2. MAXIMUM 182 IN^2 (35% AREA) ALLOWABLE PENETRATION AREA PER PANEL. ALL FINAL VENDOR CONFIGURATIONS (INCLUDING LARGER PENETRATION AREAS) WILL BE ANALYZED BY NASA.

5. GROUND PLANE BONDING LOCATIONS T.B.D.

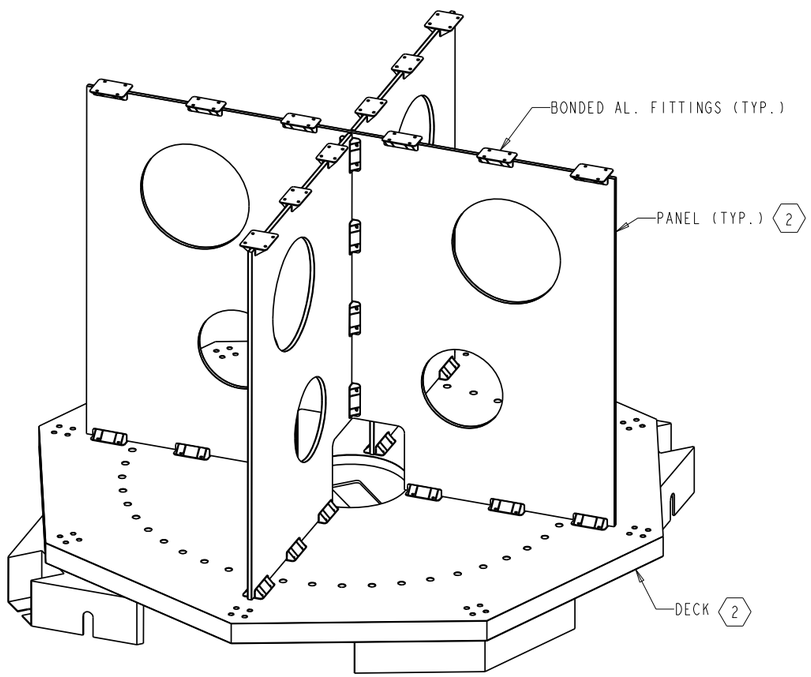

LADEE PROPULSION STRUCTURE
GENERAL TOP VIEW

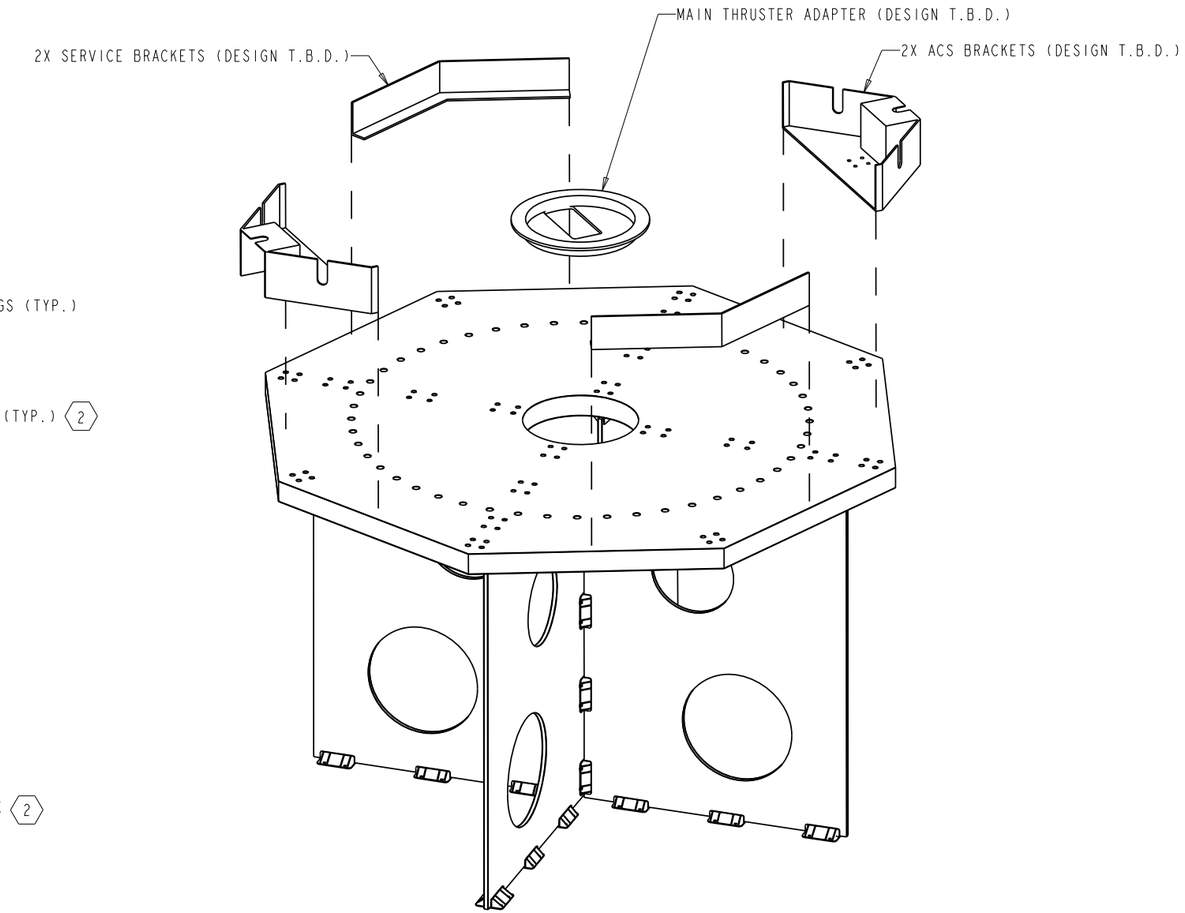

LADEE PROPULSION STRUCTURE
EXPLODED BOTTOM VIEW

QTY REQ'D PER ASSY	CAGE CODE	PART OR IDENTIFYING NO.	DESCRIPTION/NOMENCLATURE	MATERIAL SPECIFICATION	SHEET ZONE	ITEM NO.
					—	

PARTS LIST

RELEASED DRAWING

DATE: 9/14/09

NO.	NEXT ASSEMBLY
APPLICATION	

UNLESS OTHERWISE SPECIFIED ALL DIMENSIONS ARE IN INCHES. ALL DIMENSIONS AND TOLERANCES APPLY AFTER SURFACE TREATMENT.

TOLERANCE UNLESS OTHERWISE SPECIFIED
FRACTIONAL ± /
.X ± 0.1
.XX ± 0.01
.XXX ± 0.001
ANGULAR ± 0.5

DRILLED HOLE TOLERANCES

DIAMETER	TOLERANCE
.000- .125	+.005-.001
.126- .500	+.010-.002
.501-1.000	+.015-.002
1.001-2.000	+.030-.003
OVER 2.000	+.060-.005

DIAMETER ON SAME AXIS TOTAL RUN OUT .XXX

BREAK SHARP CORNERS .XX MAX

ALL MACHINED SURFACES TO BE XXX ✓

DO NOT SCALE DRAWING

PRELIM. RELEASE	DATE	DRAWN E. DALEY	DATE 091409	Ames Research Center, Moffett Field, California 94035-1000	
INITIAL RELEASE	DATE	CHECKED O. NISHIOKA	DATE 091409		
LATEST REVISION	DATE	DESIGNED	DATE	PROPULSION STRUCTURE INTERFACE LADEE	
PROJECT MGR	DATE	STRESS	DATE		
SUPERVISOR	DATE	MATERIAL	DATE	SIZE D / CAGE CODE 25307	A CB-L-080D-M039 / REV -
REQUESTOR	DATE	Q.A.	DATE	SCALE 0.200 / INDEX DATE / SHEET 1 OF 2	

PRO/E DRAWING FILE NAME: CB-L-080D-M039 | WC REV: A.1

MODEL NAME: CB-L-080D-M039 | NASABORDER 09/2007 | MODEL TYPE: ASSEM | MODEL REV: A.1 | PRELIM REL: - | INITIAL REL: 9/14/09 | LATEST REV: - | FAB ESTIMATE: -

DB: /Projects/LADEE Project/Engineering/Design/Z-Drawings

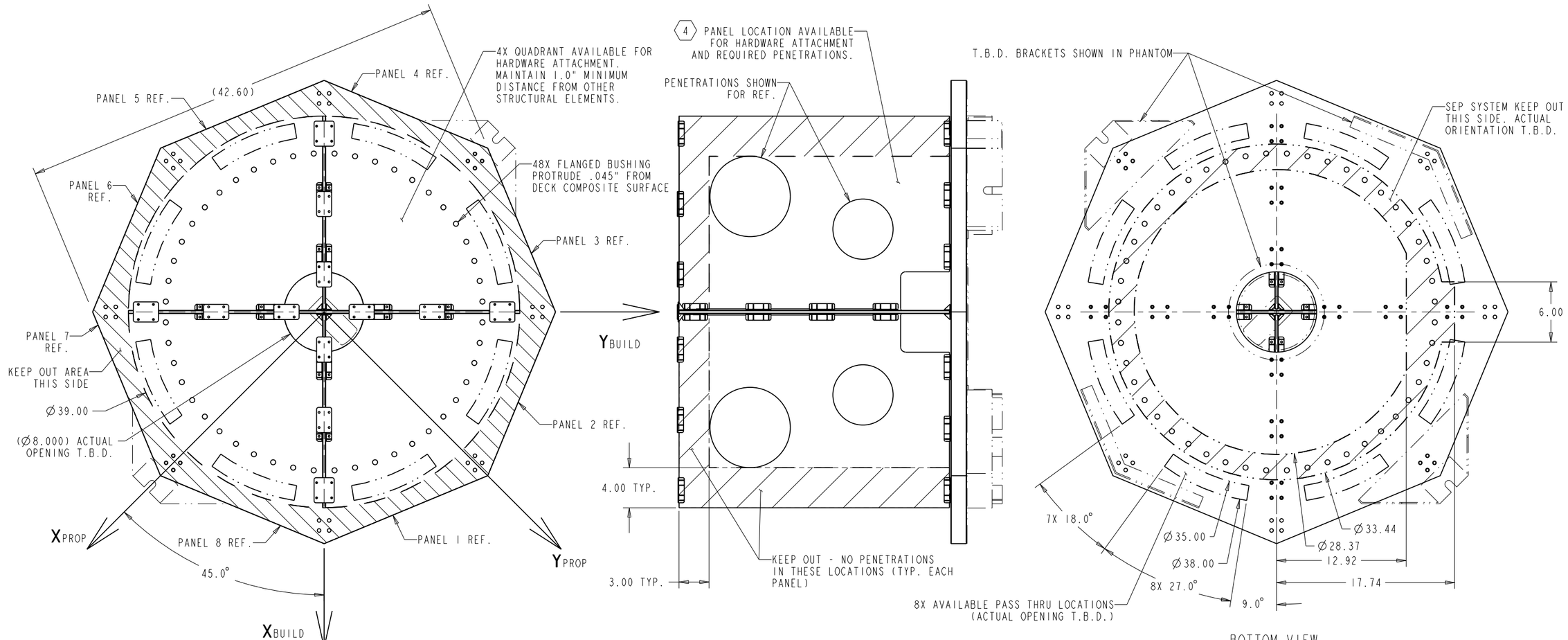

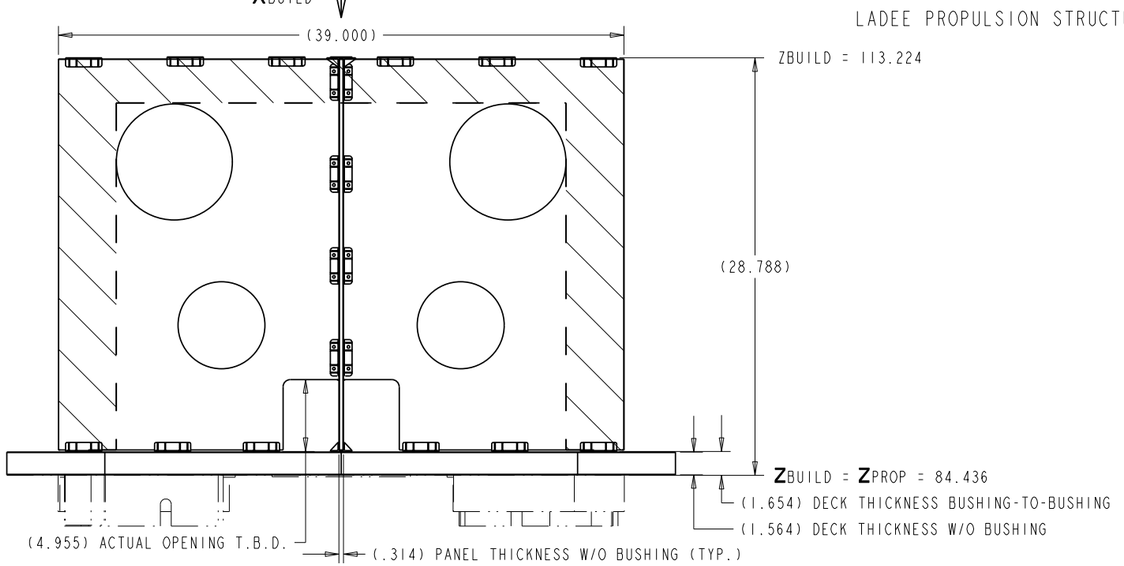

RELEASED DRAWING

DATE: 9/14/09

SEE SHEET ONE FOR REVISIONS

SIZE	CAGE CODE		REV
D	25307	A CB-L-080D-M039	-
SCALE 0.200	INDEX DATE	SHEET 2 OF 2	

PRO/E DRAWING FILE NAME: CB-L-080D-M039 | WC REV: A.1

MODEL NAME: CB-L-080D-M039 NASABORDER 09/2007 | MODEL TYPE: ASSEM | MODEL REV: A.1 | LATEST REV: - | INITIAL REL: 9/14/09 | PRELIM REL: - | FAB ESTIMATE: -

DB: /Projects/LADEE Project/Engineering/Design/Z-Drawings