AMENDMENT OF SOLICITATION/MODIFICATION OF CONTRACT

1. CONTRACT ID CODE	PAGE OF PAGES
	1 / 3

2. AMENDMENT/MODIFICATION NO.	3. EFFECTIVE DATE	4. REQUISITION/PURCHASE REQ. NO.	5. PROJECT NO. *(If applicable)*
000004	09/30/2009		98580

6. ISSUED BY CODE KSC

NASA/John F. Kennedy Space Center
Office of Procurement
MAIL CODE OP
KENNEDY SPACE CENTER FL 32899

7. ADMINISTERED BY *(If other than Item 6)* CODE KSC

NASA/Kennedy Space Center
Office of Procurement
MAIL CODE OP
KENNEDY SPACE CENTER FL 32899

8. NAME AND ADDRESS OF CONTRACTOR *(No., street, county, State and ZIP Code)*

CODE FACILITY CODE

(x) 9A. AMENDMENT OF SOLICITATION NO.
NNK09308380R

x 9B. DATED *(SEE ITEM 11)*
09/11/2009

10A. MODIFICATION OF CONTRACT/ORDER NO.

10B. DATED *(SEE ITEM 13)*

11. THIS ITEM ONLY APPLIES TO AMENDMENTS OF SOLICITATIONS

☒ The above numbered solicitation is amended as set forth in Item 14. The hour and date specified for receipt of Offers ☒ is extended. ☐ is not extended.
Offers must acknowledge receipt of this amendment prior to the hour and date specified in the solicitation or as amended, by one of the following methods: (a) By completing Items 8 and 15, and returning 0 copies of the amendment; (b) By acknowledging receipt of this amendment on each copy of the offer submitted; or (c) By separate letter or telegram which includes a reference to the solicitation and amendment numbers. FAILURE OF YOUR ACKNOWLEDGEMENT TO BE RECEIVED AT THE PLACE DESIGNATED FOR THE RECEIPT OF OFFERS PRIOR TO THE HOUR AND DATE SPECIFIED MAY RESULT IN REJECTION OF YOUR OFFER. If by virtue of this amendment you desire to change an offer already submitted, such change may be made by telegram or letter, provided each telegram or letter makes reference to the solicitation and this amendment, and is received prior to the opening hour and date specified.

12. ACCOUNTING AND APPROPRIATION DATA *(If required)*

13. THIS ITEM ONLY APPLIES TO MODIFICATION OF CONTRACTS/ORDERS. IT MODIFIES THE CONTRACT/ORDER NO. AS DESCRIBED IN ITEM 14.

CHECK ONE

A. THIS CHANGE ORDER IS ISSUED PURSUANT TO: *(Specify authority)* THE CHANGES SET FORTH IN ITEM 14 ARE MADE IN THE CONTRACT ORDER NO. IN ITEM 10A.

B. THE ABOVE NUMBERED CONTRACT/ORDER IS MODIFIED TO REFLECT THE ADMINISTRATIVE CHANGES *(such as changes in paying office, appropriation date, etc.)* SET FORTH IN ITEM 14, PURSUANT TO THE AUTHORITY OF FAR 43.103(b).

C. THIS SUPPLEMENTAL AGREEMENT IS ENTERED INTO PURSUANT TO AUTHORITY OF:

D. OTHER *(Specify type of modification and authority)*

E. IMPORTANT: Contractor ☐ is not. ☐ is required to sign this document and return _____ copies to the issuing office.

14. DESCRIPTION OF AMENDMENT/MODIFICATION *(Organized by UCF section headings, including solicitation/contract subject matter where feasible.)*

Demolition of the Fixed Service Structure FSS and Rotating Service Structure RSS, Launch Complex 39B at the John F. Kennedy Space Center, Florida.

1. This amendment is issued for the following:

2. Standard Form 1442, Block 13A., is changed:

FROM: Sealed offers in original and 3 copies to perform the work required are due at the place specified in Item 8 by 12:00 PM NOON local time on 10/14/2009.

Continued ...

Except as provided herein, all terms and conditions of the document referenced in Item 9A or 10A, as heretofore changed, remains unchanged and in full force and effect.

15A. NAME AND TITLE OF SIGNER *(Type or print)*		16A. NAME AND TITLE OF CONTRACTING OFFICER *(Type or print)*	
		Richard M. Johanboeke	
15B. CONTRACTOR/OFFEROR	15C. DATE SIGNED	16B. UNITED STATES OF AMERICA	16C. DATE SIGNED
(Signature of person authorized to sign)		*(Signature of Contracting Officer)*	

NAME OF OFFEROR OR CONTRACTOR

ITEM NO. (A)	SUPPLIES/SERVICES (B)	QUANTITY (C)	UNIT (D)	UNIT PRICE (E)	AMOUNT (F)
	TO: Sealed offers in original and 3 copies to perform the work required are due at the place specified in Item 8 by 12:00 PM NOON local time on 10/26/2009. 3. Solicitation Section L. 16 COMMUNICATIONS REGARDING THIS SOLICITATION, the due date is changed: FROM: Tuesday 9/29/2009 at 4:00PM LOCAL TIME TO: Friday 10/09/2009 at 4:00PM LOCAL TIME 4. Solicitation Section L. 21 Appendix 1, PAST PERFORMANCE QUESTIONNAIRE SOLICITATION NNK0930830R DEMOLITION OF THE FIXED SERVICE STRUCTURE (FSS)/ ROTATING SERVICE STRUCTURE (RSS) AT LAUNCH COMPLEX 39B, KENNEDY SPACE CENTER, the due date is changed: FROM: Wednesday 10/14/2009 at 4:00PM LOCAL TIME TO: Monday 10/26/2009 at 4:00PM LOCAL TIME 5. NEW REQUIREMENT TO THE SCOPE OF WORK Ares I-X Vehicle Stabilization Structure The contractor shall demolish the Ares I-X Vehicle Stabilization Structure and associated systems as currently installed on the east elevation of the Fixed Service Structure, FSS. See the attached updated photographs of the new LC-39B Current Elevation, looking northwest, and the new LC-39B Current Elevation, looking west, for pictorial view of the new structure and associated equipment. NOTE, the updated photographs will be uploaded by COB 10/6/09. Disposition of demolished structure and equipment shall be in accordance with Drawing 222W2200001, Sheet V3, Demolition Notes and applicable specification, contract terms and conditions. The following drawings are added and incorporated into Solicitation NNK09308380R, Demolition of the Fixed Service Structure, FSS and Rotating Service Continued ...				

NAME OF OFFEROR OR CONTRACTOR

ITEM NO. (A)	SUPPLIES/SERVICES (B)	QUANTITY (C)	UNIT (D)	UNIT PRICE (E)	AMOUNT (F)
	Structure RSS, Launch Complex 39B at the John F. Kennedy Space Center, Florida. a. Drawing 95K01168, Ares I-X Vehicle Stabilization Porch Assembly, Fabrication. b. Drawing 95K01170, Ares I-X VSS Hydraulic Actuation System, Sheet M-2. c. Drawing 95K01172, Sheets 3 and 4. d. Drawing 95K01173, Ares I-X Vehicle Stabilization System Swing Arm Assembly, Sheets 1 and 2. e. Drawing 95K01184, Sheet 3. 6. All other terms and conditions remain unchanged. END OF AMENDMENT INCO TERMS 2: DESTINATION				

NOTICE = WHEN GOVERNMENT DRAWINGS, SPECIFICATIONS, OR OTHER DATA ARE USED FOR ANY PURPOSE OTHER THAN IN CONNECTION WITH A DEFINITELY RELATED GOVERNMENT PROCUREMENT OPERATION, THE UNITED STATES GOVERNMENT THEREBY INCURES NO RESPONSIBILITY NOR ANY OBLIGATION WHATSOEVER; AND THE FACT THAT THE GOVERNMENT MAY HAVE FORMULATED, FURNISHED, OR IN ANY WAY SUPPLIED THE SAID DRAWINGS, SPECIFICATIONS OR ANY OTHER DATA IS NOT TO BE REGARDED BY IMPLICATION OR OTHERWISE IN ANY MANNER LICENSING THE HOLDER OR ANY OTHER PERSON OR CORPORATION, OR CONVEYING ANY RIGHTS OR PERMISSION TO MANUFACTURE, USE OR SELL ANY PATENTED INVENTION THAT IN ANY WAY BE RELATED THERETO.

LAUNCH COMPLEX 39
PAD-B
ARES I-X VEHICLE STABILIZATION SYSTEM PORCH ASSEMBLY (FABRICATION)

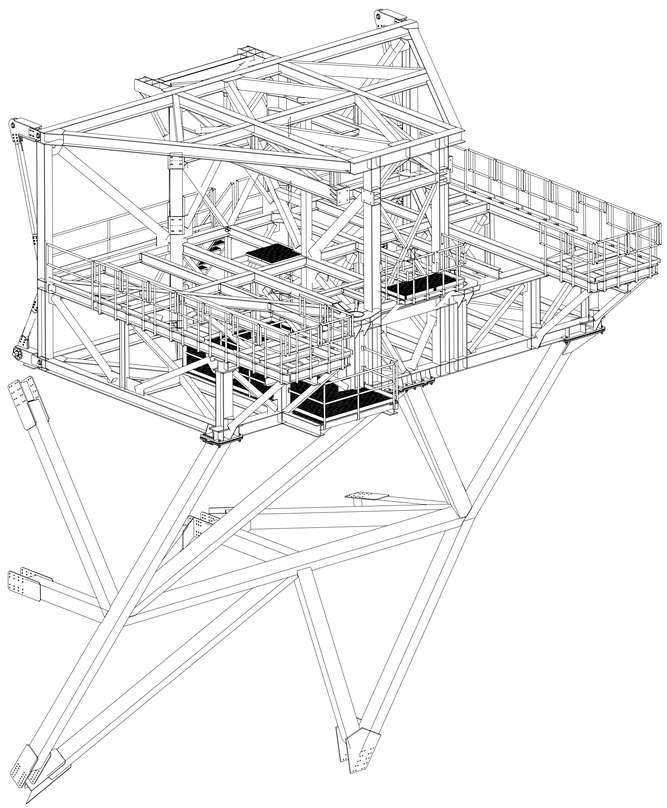

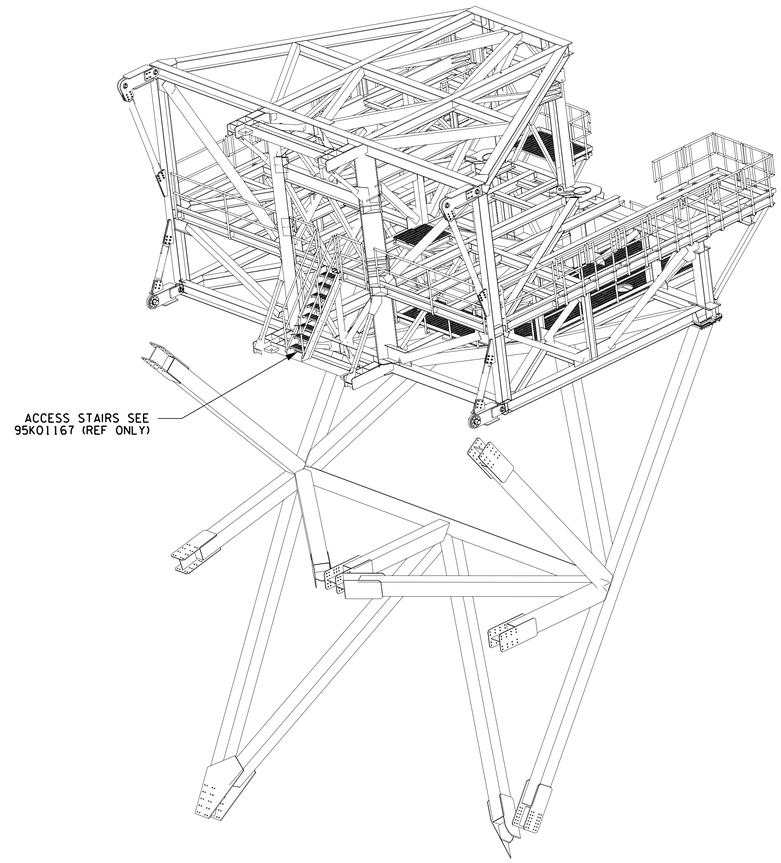

INDEX

SHEET NO	REV STATUS	DESCRIPTION	FUNCTIONAL CODE
1	A	TITLE, ISO & INDEX	V-1
2		NOTES & DESIGN CRITERIA	S-1
3	A	S ELEV, TOP & BACK FRAMING	S-2
4	A	ACCESS, BOT & FRONT FRAMING	S-3
5		SECTIONS & DETAILS	S-4
6		CENTER TRUSS & DETAILS	S-5
7		SECTIONS & DETAILS	S-6
8	A	SECTIONS & DETAILS	S-7
9	A	SECTIONS & DETAILS	S-8
10	A	SECTIONS & DETAILS	S-9
11		SECTIONS & DETAILS	S-10
12	A	LOWER HINGE WELDMENT	S-11
13	A	SECTIONS & DETAILS	S-12
14	A	HANDRAIL DETAILS	S-13
15		ECS CATWALK INSTALLATION	S-14
16		ECS CATWALK HATCH	S-15
17	A	SUPPORT LEG	S-16
18	A	SUPPORT LEG DETAILS	S-17
19	A	SUPPORT LEG DETAILS	S-18
20	A	SUPPORT LEG DETAILS	S-19
21	A	FORCE DIAGRAMS	S-20
22	A	FORCE DIAGRAMS	S-21
23	A	FORCE DIAGRAMS	S-22

SYM	ZONE	DESCRIPTION	DATE	APPROVAL
A		REVISED SHTS 1,3,4,8,9,10,12-14 & 21-23 REVISED AND REDRAWN SHTS 17-20	2008/11/04	S. KUGELMANN

REVISIONS

SIGNATURES		DATE
DRAFTER	W. MCINTOSH	2008/09/19
CHECKER	G. NEELY	2008/09/19
ENGINEER	Z. JAKSETIC	2008/09/19
SUBMITTED		
APPROVED	S. KUGELMANN	2008/09/19

NATIONAL AERONAUTICS AND SPACE ADMINISTRATION
JOHN F. KENNEDY SPACE CENTER, NASA
KENNEDY SPACE CENTER, FLORIDA

LAUNCH COMPLEX 39
PAD-B
ARES I-X
VEHICLE STABILIZATION SYSTEM
PORCH ASSEMBLY (FABRICATION)
TITLE, ISO & INDEX

SIZE F | DWG. NO. 95K01168 | REV A

TITLE USA 15145 MGR 1 | PROJ. NO. | SHEET 1 OF 23

THIS COMPUTER DRAWING WAS CREATED IN MICROSTATION 95 AND FILED UNDER THE DRAWING NUMBER V-1

KSC FORM 1-11 (REV. 3/76) (CG 393)

PAGE 1 OF 23

NOTICE - WHEN GOVERNMENT DRAWINGS, SPECIFICATIONS, OR OTHER DATA ARE USED FOR ANY PURPOSE OTHER THAN IN CONNECTION WITH A DEFINITELY RELATED GOVERNMENT PROCUREMENT OPERATION, THE UNITED STATES GOVERNMENT THEREBY INCURES NO RESPONSIBILITY NOR ANY OBLIGATION WHATSOEVER; AND THE FACT THAT THE GOVERNMENT MAY HAVE FORMULATED, FURNISHED, OR IN ANY WAY SUPPLIED THE SAID DRAWINGS, SPECIFICATIONS OR ANY OTHER DATA IS NOT TO BE REGARDED BY IMPLICATION OR OTHERWISE IN ANY MANNER LICENSING THE HOLDER OR ANY OTHER PERSON OR CORPORATION, OR CONVEYING ANY RIGHTS OR PERMISSION TO MANUFACTURE, USE, OR SELL ANY PATENTED INVENTION THAT IN ANY WAY BE RELATED THERETO.

GENERAL STRUCTURAL NOTES:

1. STRUCTURAL STEEL SHALL BE FABRICATED AND ERECTED IN ACCORDANCE WITH THE AISC SPECIFICATION FOR THE DESIGN, FABRICATION, AND ERECTION OF STRUCTURAL STEEL FOR BUILDINGS AND THE CODE OF STANDARD PRACTICES FOR STEEL BUILDINGS AND BRIDGES.

2. UNLESS OTHERWISE NOTED ON THE DRAWING, STRUCTURAL SHAPES AND PLATE SHALL CONFORM TO ASTM A572 GRADE 50.

3. UNLESS OTHERWISE NOTED ON THE DRAWING, STRUCTURAL PIPE AND TUBING SHALL CONFORM TO ASTM A500, GRADE B.

4. UNLESS OTHERWISE NOTED ON THE DRAWING, ALL BOLTED CONNECTIONS SHALL BE DESIGNED AND INSTALLED PER SPECIFICATION FOR STRUCTURAL JOINTS USING ASTM A325 OR A490 BOLTS. BOLTS SHALL BE ASTM A325 TYPE I GALVANIZED WITH MATCHING ASTM A563 TYPE DH HEAVY HEX NUT AND WASHER PER ASTM F436.

5. ALL STRUCTURAL WELDING AND WELD INSPECTION SHALL BE IN ACCORDANCE WITH NASA-SPEC-5004, CLASS B, EXCEPT WHERE DESIGNATED OTHERWISE IN THE TAIL OF THE WELD SYMBOL.

6. WHERE ALUMINUM COMES INTO CONTACT WITH STEEL, STEEL SHALL BE MECHANICALLY CLEANED AND COATED WITH AN EPOXY MASTIC. EPOXY MASTIC WILL SUFFICE AS AN ISOLATION MATERIAL. WHERE A STAINLESS STEEL OR CARBON STEEL FASTENER OR WASHER COMES INTO CONTACT WITH ALUMINUM, CONTACT SURFACES SHALL BE SEPARATED BY A SUITABLE PROTECTIVE MATERIAL SUCH AS VINYL OR TEFLON TAPE. GALVANIZED OR ZINC PLATED FASTENERS OR WASHERS MAY CONTACT ALUMINUM.

7. REMOVE BURRS AND BREAK SHARP EDGES.

8. ALL MACHINED SURFACES SHALL BE 250 OR BETTER UNLESS OTHERWISE NOTED ON THE DRAWING.

9. ALL GROUNDING SHALL BE DONE IN ACCORDANCE WITH THE REQUIREMENTS OF KSC-STD-E-0012 AND THE LATEST EDITION OF THE NATIONAL ELECTRIC CODES.

10. SHOP OR FIELD SPLICES OF NEW STRUCTURAL MEMBERS, NEW REINFORCING PLATES, OR EXISTING MEMBERS ARE PROHIBITED, EXCEPT AS DETAILED ON THE APPROVED SHOP DRAWINGS. ALL SPLICES SHALL BE SPECIFICALLY DETAILED AND SUBMITTED FOR APPROVAL ON SHOP DRAWINGS PRIOR TO FABRICATION.

11. CONNECTIONS THAT ARE NOT DETAILED OR REFERENCED AS TYPICAL SHALL DEVELOP 100% OF THE MEMBER CAPACITY.

12. THE FABRICATOR SHALL FURNISH A STRUCTURAL SUBMITTAL WHICH SHALL INCLUDE FABRICATION AND ERECTION DRAWINGS. FABRICATION SHALL NOT COMMENCE UNTIL THIS REVIEW IS COMPLETED.

13. PAINTING NEW CARBON STEEL

    A. ALL PREPARATION AND PAINTING SHALL BE FOR ZONE I EXPOSURE AS DEFINED BY NASA-STD-5008.

       PREPARATION:

       ABRASIVE BLAST TO "NEAR WHITE METAL" PER SSPC-SP-10 TO ACHIEVE A 1.5 TO 3 MIL ANCHOR PROFILE. REMOVE ABRASIVE RESIDUE. CLEAN AND DRY SURFACES.

       COATING:

       AN INORGANIC ZINC COATING FROM NASA-STD-5008 APPENDIX A SHALL BE APPLIED TO A 4 TO 6 MIL DRY FILM THICKNESS.

    B. CERTIFIED NACE INSPECTION IS REQUIRED FOR PREPARATION OF SURFACES AND APPLICATION OF ALL COATINGS. REPORTS SHALL BE SUBMITTED WEEKLY TO THE CONTRACTING OFFICER OR MODIFICATION MANAGEMENT (AS APPROPRIATE) DURING THE COATING PROCESS.

DESIGN CRITERIA:

1. WIND LOADS SHALL BE CALCULATED IN ACCORDANCE WITH "ASCE 7-05" "MINIMUM DESIGN LOADS FOR BUILDINGS AND OTHER STRUCTURES".

2. DESIGN LOADS:

   DEAD LOADS:
   SELF WEIGHT OF STRUCTURE (INCLUDES 5% FOR CONNECTIONS)

   LIVE LOADS:
   PORCH GRATING .....100 PSF
   SWING ARM GRATING ..... 60 PSF
   ECS PLATFORM ACCESS ..... 60 PSF
   ECS PLATFORM.....100 PSF

   VEHICLE INDUCED LOADS:
   60 KIPS - HORIZONTALLY AT EACH SWING ARM LATCH IN ANY DIRECTION
   6 KIPS - VERTICALLY AT EACH SWING ARM LATCH IN ANY DIRECTION

   OPERATIONAL WIND LOAD - DESIGN BASED ON THE FOLLOWING:

   DESIGN WIND VELOCITY.....75 MPH (65 KNOTS) OPERATIONAL WIND
   IMPORTANCE FACTOR .....1.15 AT OPERATIONAL WINDS
   EXPOSURE CATEGORY ....."C"
   GUST EFFECT FACTOR.....0.85
   SOLIDITY RATIO .....100% (LIGHTNING MAST EXTENSION = 25%)

   HURRICANE CONDITIONS - DESIGN BASED ON THE FOLLOWING:

   DESIGN WIND VELOCITY.....130 MPH (113 KNOTS) hURRICANE WINDS
   IMPORTANCE FACTOR 1.00
   EXPOSURE CATEGORY ....."C"
   GUST EFFECT FACTOR.....0.85
   SOLIDITY RATIO .....100% VSS & FSS

3. LFRD LOAD COMBINATIONS:

   OPERATIONAL CONIDITION ..... 1.2DL + 1.6 WL + 1.0 VEHICLE LOAD + .5LL
   HURRICANE CONDITION ..... 1.2DL + 1.6 WL

4. THE FOLLOWING CODES AND STANDARDS ARE USED FOR DESIGN:

KSC-STD-Z-0004	STANDARD FOR DESIGN OF STRUCTURAL STEEL BUILDINGS AND OTHER STRUCTURES
AISC/LRFD	AMERICAN INSTITUTE OF STEEL CONSTRUCTION LOAD RESISTANCE FACTOR DESIGN
AISC/HSS	AMERICAN INSTITUTE OF STEEL CONSTRUCTION HOLLOW STRUCTURAL SECTION CONNECTION MANUAL
KSC-DE-512-SM	FACILITY SYSTEM AND EQUIPMENT GENERAL DESIGN REQUIREMENTS
ASCE 7-05	AMERICAN SOCIETY OF CIVIL ENGINEERS MINIMUM DESIGN LOADS FOR BUILDINGS AND OTHER STRUCTURES.
29 CFR 1910	OCCUPATIONAL SAFETY AND HEALTH ADMINISTRATION, LABOR (OCCUPATIONAL SAFETY AND HEALTH STANDARDS).

THIS COMPUTER DRAWING WAS CREATED IN MICROSTATION AND FILED UNDER THE DRAWING NUMBER

S-1

SYM	ZONE	DESCRIPTION	DATE	APPROVAL
		REVISIONS		

SIGNATURES		DATE
DRAFTER	W. MCINTOSH	2008/09/19
CHECKER	G. NEELY	2008/09/19
ENGINEER	Z. JAKSETIC	2008/09/19
SUBMITTED		
APPROVED	S. KUGELMANN	DATE 2008/09/19
TITLE	USA 15145	MGR 1

NATIONAL AERONAUTICS AND SPACE ADMINISTRATION
JOHN F. KENNEDY SPACE CENTER, NASA
KENNEDY SPACE CENTER, FLORIDA

LAUNCH COMPLEX 39
PAD-B
ARES I-X
VEHICLE STABILIZATION SYSTEM
PORCH ASSEMBLY (FABRICATION)
NOTES & DESIGN CRITERIA

SIZE F | DWG. NO. 95K01168 | REV

PROJ. NO. | SHEET 2 OF

KSC FORM 1-11 (REV. 3/76) (CVD 3/93)

NOTICE = WHEN GOVERNMENT DRAWINGS, SPECIFICATIONS, OR OTHER DATA ARE USED FOR ANY PURPOSE OTHER THAN IN CONNECTION WITH A DEFINITELY RELATED GOVERNMENT PROCUREMENT OPERATION, THE UNITED STATES GOVERNMENT THEREBY INCURES NO RESPONSIBILITY NOR ANY OBLIGATION WHATSOEVER; AND THE FACT THAT THE GOVERNMENT MAY HAVE FORMULATED, FURNISHED, OR IN ANY WAY SUPPLIED THE SAID DRAWINGS, SPECIFICATIONS OR ANY OTHER DATA IS NOT TO BE REGARDED BY IMPLICATION OR OTHERWISE IN ANY MANNER LICENSING THE HOLDER OR ANY OTHER PERSON OR CORPORATION, OR CONVEYING ANY RIGHTS OR PERMISSION TO MANUFACTURE, USE, OR SELL ANY PATENTED INVENTION THAT IN ANY WAY BE RELATED THERETO.

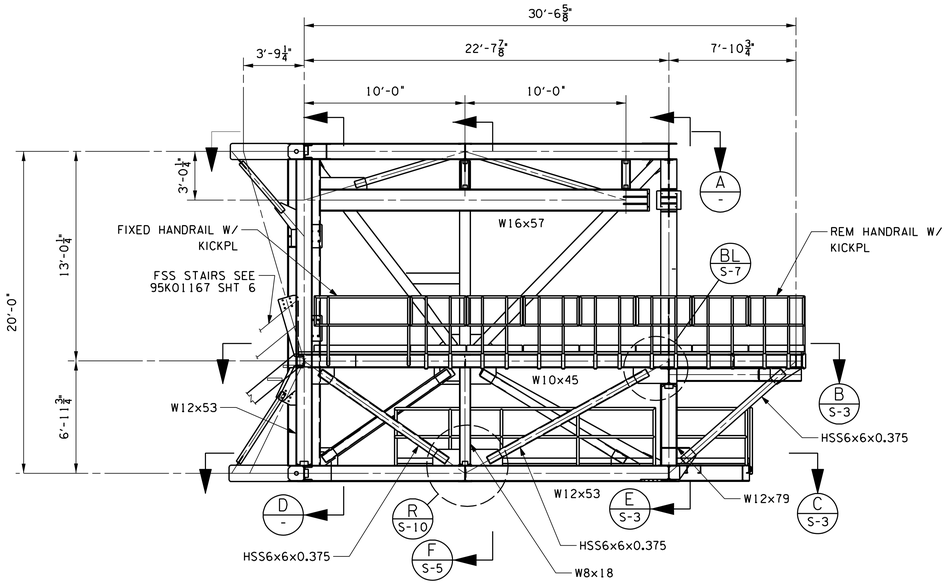

STABILIZER PORCH SOUTH ELEVATION

SCALE: 1/4"=1'-0"

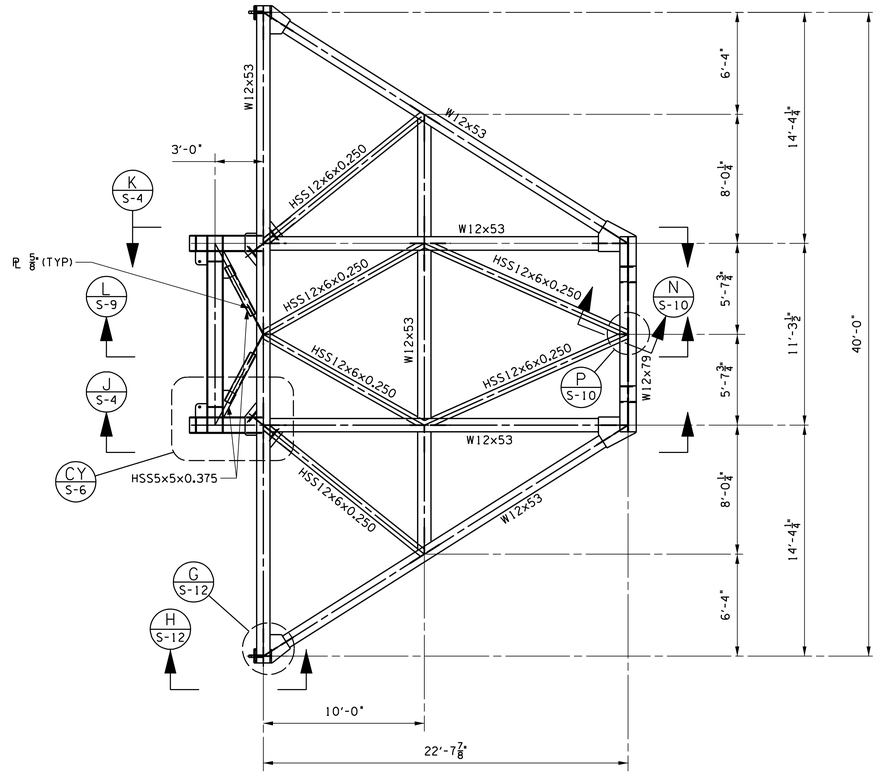

PLAN VIEW - TOP TRUSS (A -)

SCALE: 1/4"=1'-0"

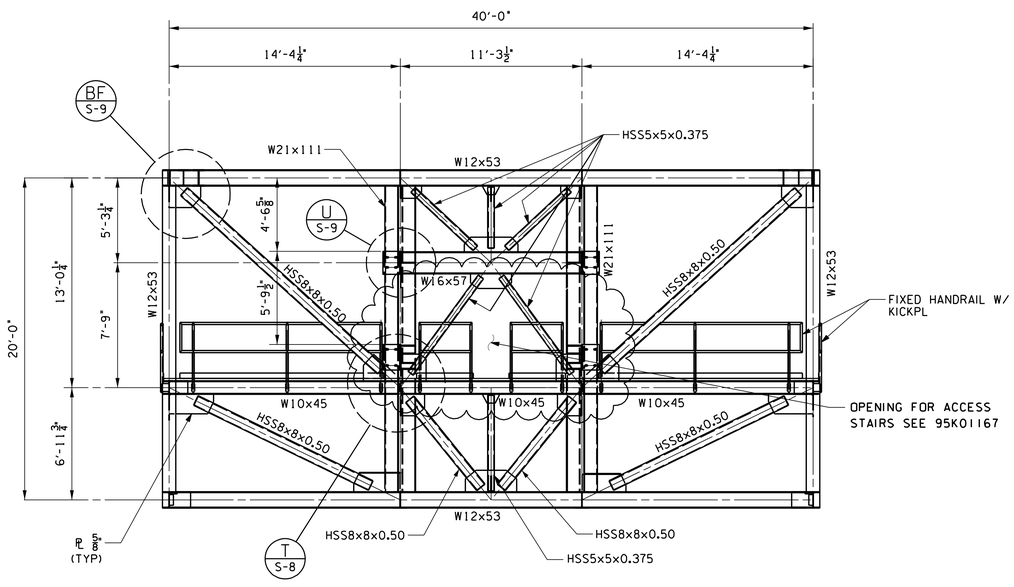

ELEVATION - BACK TRUSS (D -)

SCALE: 1/4" = 1'-0"

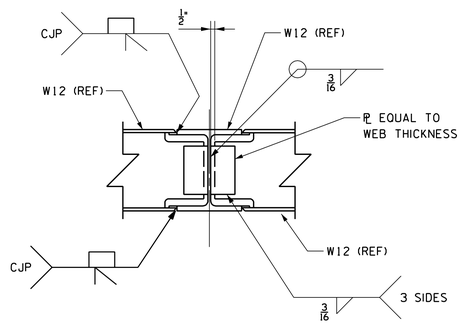

NOTE: GRATING NOT SHOWN FOR CLARITY

TYP BEAM TO BEAM CONNECTION

SCALE: 1 1/2"=1'-0"

SYM	ZONE	DESCRIPTION	DATE	APPROVAL
A		INCORPORATED REDLINE CHANGES	2008/11/04	S. KUGELMANN

REVISIONS

SIGNATURES		DATE
DRAFTER	W. MCINTOSH	2008/09/19
CHECKER	G. NEELY	2008/09/19
ENGINEER	Z. JAKSETIC	2008/09/19
SUBMITTED		
APPROVED	S. KUGELMANN	2008/09/19
TITLE	USA 15145 MGR I	

NATIONAL AERONAUTICS AND SPACE ADMINISTRATION
JOHN F. KENNEDY SPACE CENTER, NASA
KENNEDY SPACE CENTER, FLORIDA

LAUNCH COMPLEX 39
PAD-B
ARES I-X
VEHICLE STABILIZATION SYSTEM
PORCH ASSEMBLY (FABRICATION)
S. ELEV, TOP & BACK FRAMING

SIZE F | DWG. NO. 95K01168 | REV A

PROJ. NO. | SHEET 3 OF

THIS COMPUTER DRAWING WAS CREATED IN MICROSTATION AND FILED UNDER THE DRAWING NUMBER S-2

KSC FORM 1-11 (REV. 3/76) (CIG 3/93)

0408B-1000

NOTICE – WHEN GOVERNMENT DRAWINGS, SPECIFICATIONS, OR OTHER DATA ARE USED FOR ANY PURPOSE OTHER THAN IN CONNECTION WITH A DEFINITELY RELATED GOVERNMENT PROCUREMENT OPERATION THE UNITED STATES GOVERNMENT THEREBY INCURS NO RESPONSIBILITY NOR ANY OBLIGATION WHATSOEVER; AND THE FACT THAT THE GOVERNMENT MAY HAVE FORMULATED, FURNISHED, OR IN ANY WAY SUPPLIED THE SAID DRAWINGS, SPECIFICATIONS OR ANY OTHER DATA IS NOT TO BE REGARDED BY IMPLICATION OR OTHERWISE IN ANY MANNER LICENSING THE HOLDER OR ANY OTHER PERSON OR CORPORATION OR CONVEYING ANY RIGHTS OR PERMISSION TO MANUFACTURE USE, OR SELL ANY PATENTED INVENTION THAT IN ANY WAY BE RELATED THERETO.

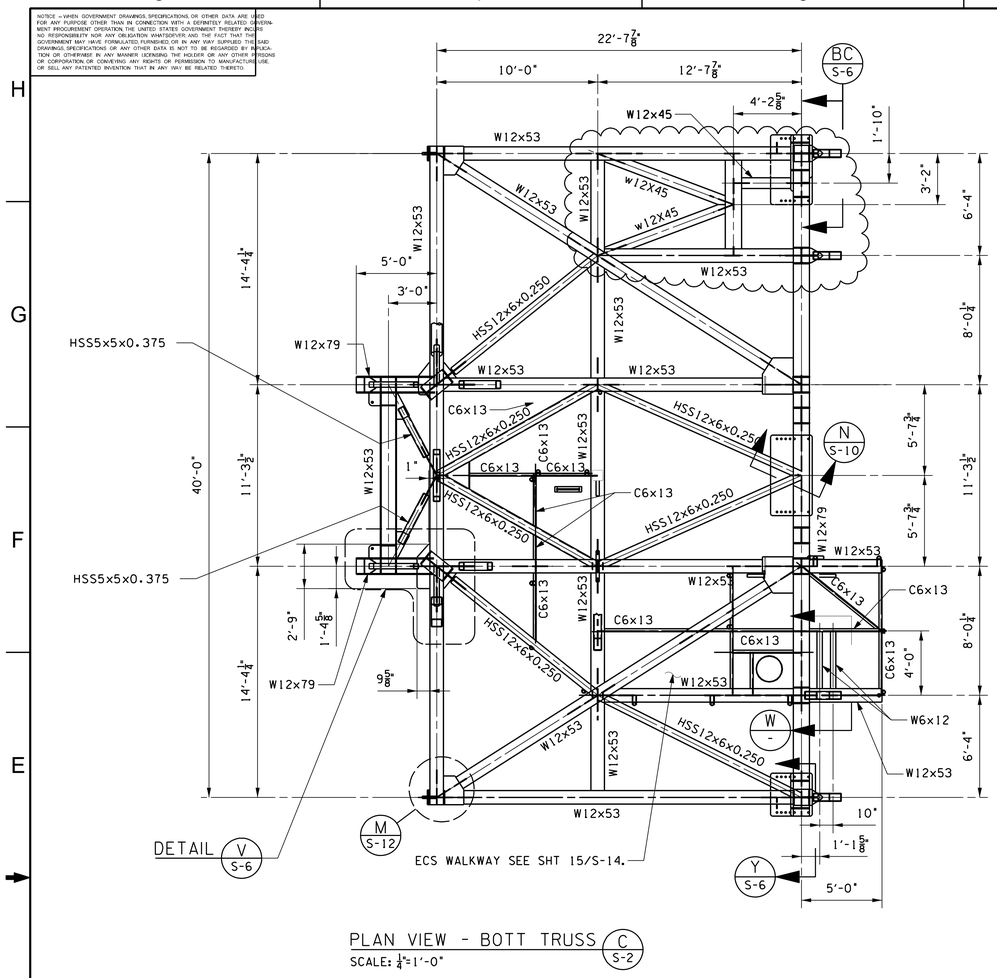

PLAN VIEW - BOTT TRUSS (C / S-2)
SCALE: 1/4"=1'-0"

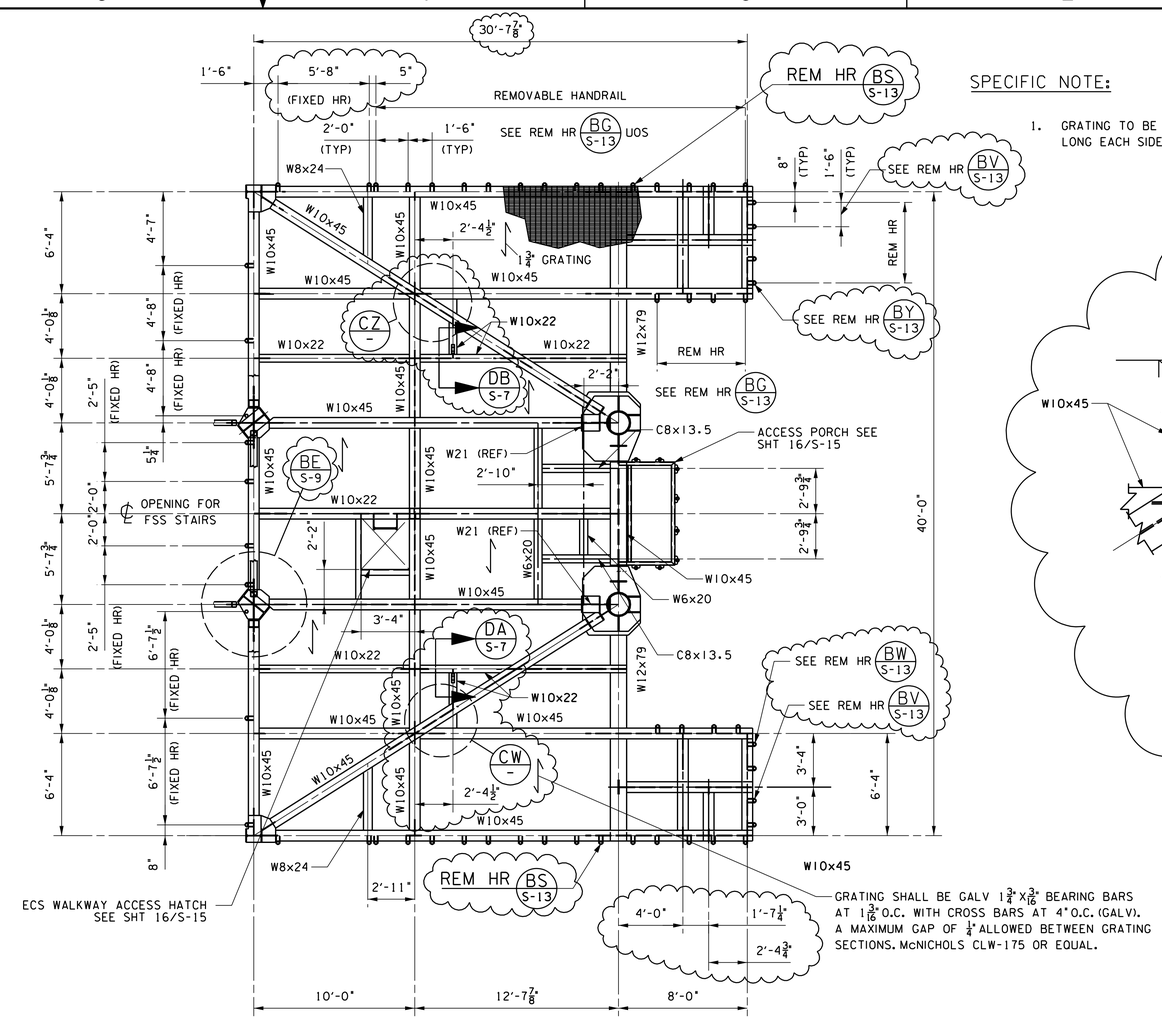

SPECIFIC NOTE:

1. GRATING TO BE WELDED TO FRAMING WITH 1/8 FILLET WELD X 1" LONG EACH SIDE OF EVERY FOURTH BEARING BAR.

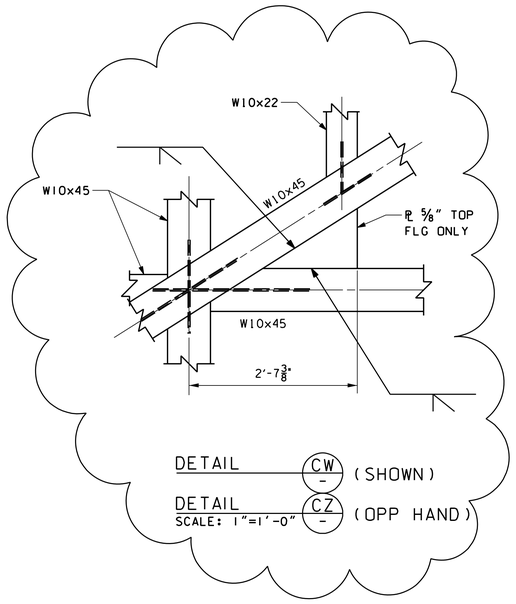

DETAIL (CW / -) (SHOWN)
DETAIL (CZ / -) (OPP HAND)
SCALE: 1"=1'-0"

GRATING SHALL BE GALV 1 3/4" X 3/16" BEARING BARS AT 1 3/16" O.C. WITH CROSS BARS AT 4" O.C. (GALV). A MAXIMUM GAP OF 1/4" ALLOWED BETWEEN GRATING SECTIONS. McNICHOLS CLW-175 OR EQUAL.

PLAN VIEW - WORK LEVEL (B / S-2)
SCALE: 1/4"=1'-0"

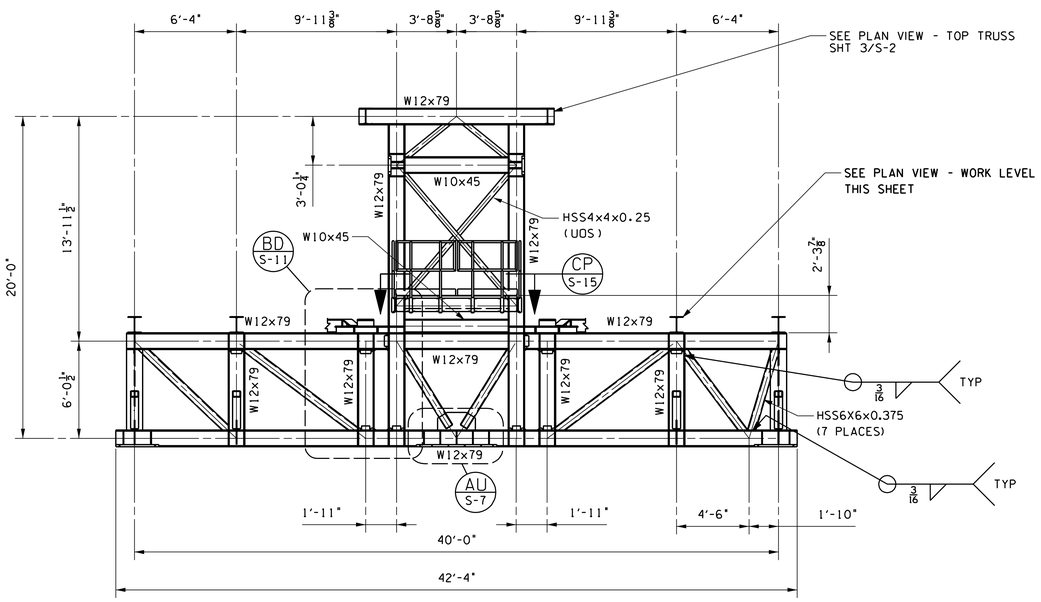

ELEVATION - FRONT TRUSS (E / S-2)
SCALE: 1/4"=1'-0"

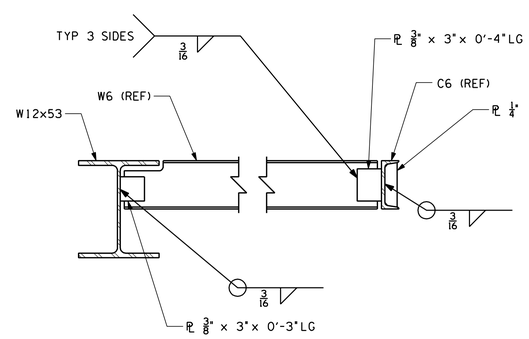

SECTION (W / -)
SCALE: 1 1/2" = 1'-0"

SYM	ZONE	DESCRIPTION	DATE	APPROVAL
A		INCORPORATED REDLINE CHANGES	2008/11/04	S. KUGELMANN

REVISIONS

SIGNATURES		DATE
DRAFTER	W. MCINTOSH	2008/09/19
CHECKER	G. NEELY	2008/09/19
ENGINEER	Z. JAKSETIC	2008/09/19
SUBMITTED		
APPROVED	S. KUGELMANN	2008/09/19

NATIONAL AERONAUTICS AND SPACE ADMINISTRATION
JOHN F. KENNEDY SPACE CENTER, NASA
KENNEDY SPACE CENTER, FLORIDA

LAUNCH COMPLEX 39
PAD-B
ARES I-X
VEHICLE STABILIZATION SYSTEM
PORCH ASSEMBLY (FABRICATION)
ACCESS, BOT & FRONT FRAMING

SIZE F | DWG. NO. 95K01168 | REV A
TITLE USA 15145 MGR 1 | PROJ. NO. | SHEET 4 OF

THIS COMPUTER DRAWING WAS CREATED IN MICROSTATION AND FILED UNDER THE DRAWING NUMBER S-3

KSC FORM 1-11 (REV. 3/76) (CIG 3-93)

NOTICE = WHEN GOVERNMENT DRAWINGS, SPECIFICATIONS, OR OTHER DATA ARE USED FOR ANY PURPOSE OTHER THAN IN CONNECTION WITH A DEFINITELY RELATED GOVERNMENT PROCUREMENT OPERATION, THE UNITED STATES GOVERNMENT THEREBY INCURS NO RESPONSIBILITY NOR ANY OBLIGATION WHATSOEVER; AND THE FACT THAT THE GOVERNMENT MAY HAVE FORMULATED, FURNISHED, OR IN ANY WAY SUPPLIED THE SAID DRAWINGS, SPECIFICATIONS OR ANY OTHER DATA IS NOT TO BE REGARDED BY IMPLICATION OR OTHERWISE IN ANY MANNER LICENSING THE HOLDER OR ANY OTHER PERSON OR CORPORATION, OR CONVEYING ANY RIGHTS OR PERMISSION TO MANUFACTURE, USE, OR SELL ANY PATENTED INVENTION THAT IN ANY WAY BE RELATED THERETO.

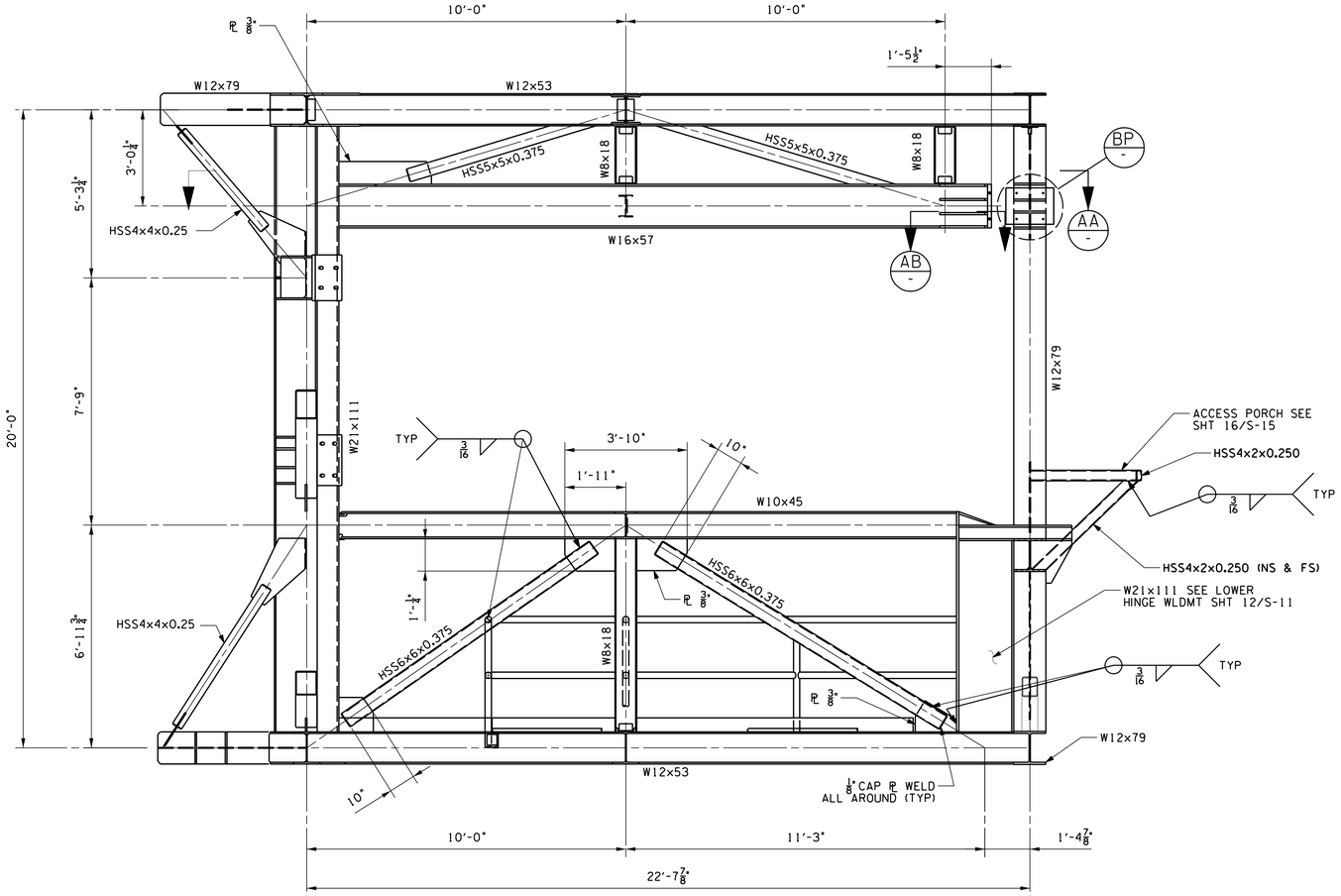

SECTION J S-2 (SHOWN)
SECTION K S-2 (OPP HAND)
SCALE: ½"=1'-0"

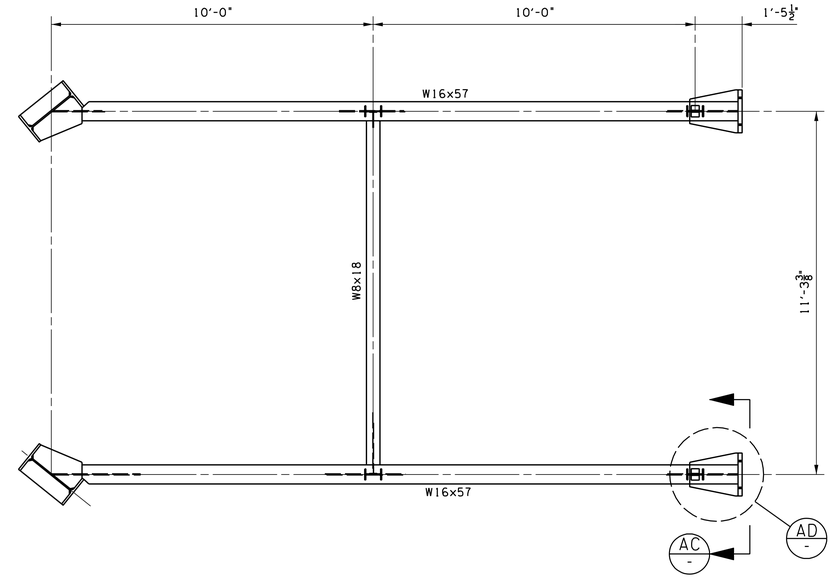

SECTION AA
SCALE: ½"=1'-0"

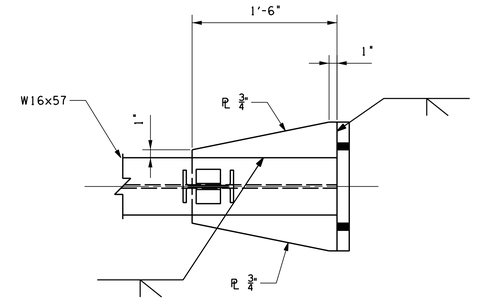

DETAIL AD
SCALE: 1½"=1'-0"

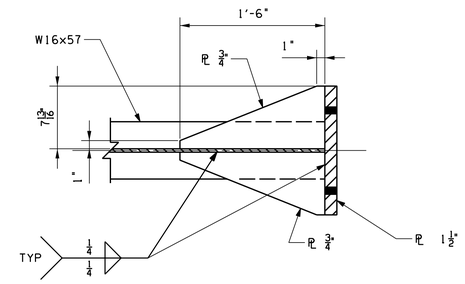

SECTION AB
SCALE: 1½"=1'-0"

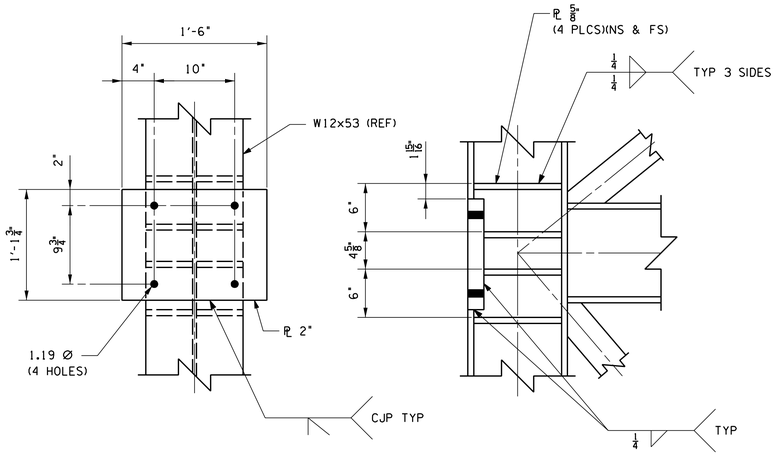

MOUNTING PLATE BP
SCALE: 1½"=1'-0"

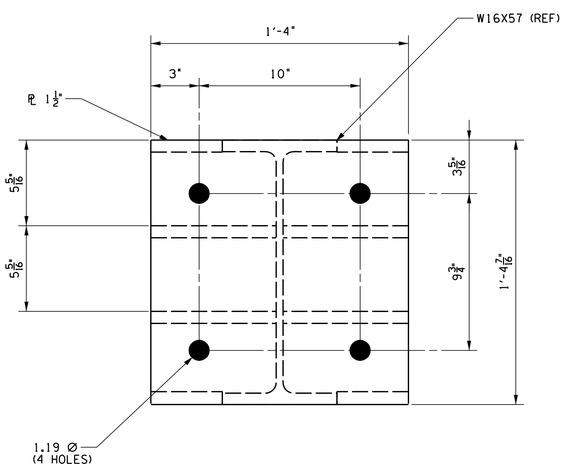

VIEW AC (2 PLACES)
SCALE: 3"=1'-0"

THIS COMPUTER DRAWING WAS CREATED IN MICROSTATION AND FILED UNDER THE DRAWING NUMBER

S-4

SYM	ZONE	DESCRIPTION	DATE	APPROVAL
		REVISIONS		

SIGNATURES		DATE
DRAFTER	W. MCINTOSH	2008/09/19
CHECKER	G. NEELY	2008/09/19
ENGINEER	Z. JAKSETIC	2008/09/19
SUBMITTED		
APPROVED	S. KUGELMANN	2008/09/19

NATIONAL AERONAUTICS AND SPACE ADMINISTRATION
JOHN F. KENNEDY SPACE CENTER, NASA
KENNEDY SPACE CENTER, FLORIDA

LAUNCH COMPLEX 39
PAD-B
ARES I-X
VEHICLE STABILIZATION SYSTEM
PORCH (FABRICATION)
SECTIONS & DETAILS

SIZE F | DWG. NO. 95K01168 | REV

TITLE USA 15145 MGR 1 | PROJ. NO. | SHEET 5 OF

KSC FORM 1-11 (REV. 3/76) (CJG 3/93)

NOTICE = WHEN GOVERNMENT DRAWINGS, SPECIFICATIONS, OR OTHER DATA ARE USED FOR ANY PURPOSE OTHER THAN IN CONNECTION WITH A DEFINITELY RELATED GOVERNMENT PROCUREMENT OPERATION, THE UNITED STATES GOVERNMENT THEREBY INCURS NO RESPONSIBILITY NOR ANY OBLIGATION WHATSOEVER; AND THE FACT THAT THE GOVERNMENT MAY HAVE FORMULATED, FURNISHED, OR IN ANY WAY SUPPLIED THE SAID DRAWINGS, SPECIFICATIONS OR ANY OTHER DATA IS NOT TO BE REGARDED BY IMPLICATION OR OTHERWISE IN ANY MANNER LICENSING THE HOLDER OR ANY OTHER PERSON OR CORPORATION, OR CONVEYING ANY RIGHTS OR PERMISSION TO MANUFACTURE, USE OR SELL ANY PATENTED INVENTION THAT IN ANY WAY BE RELATED THERETO.

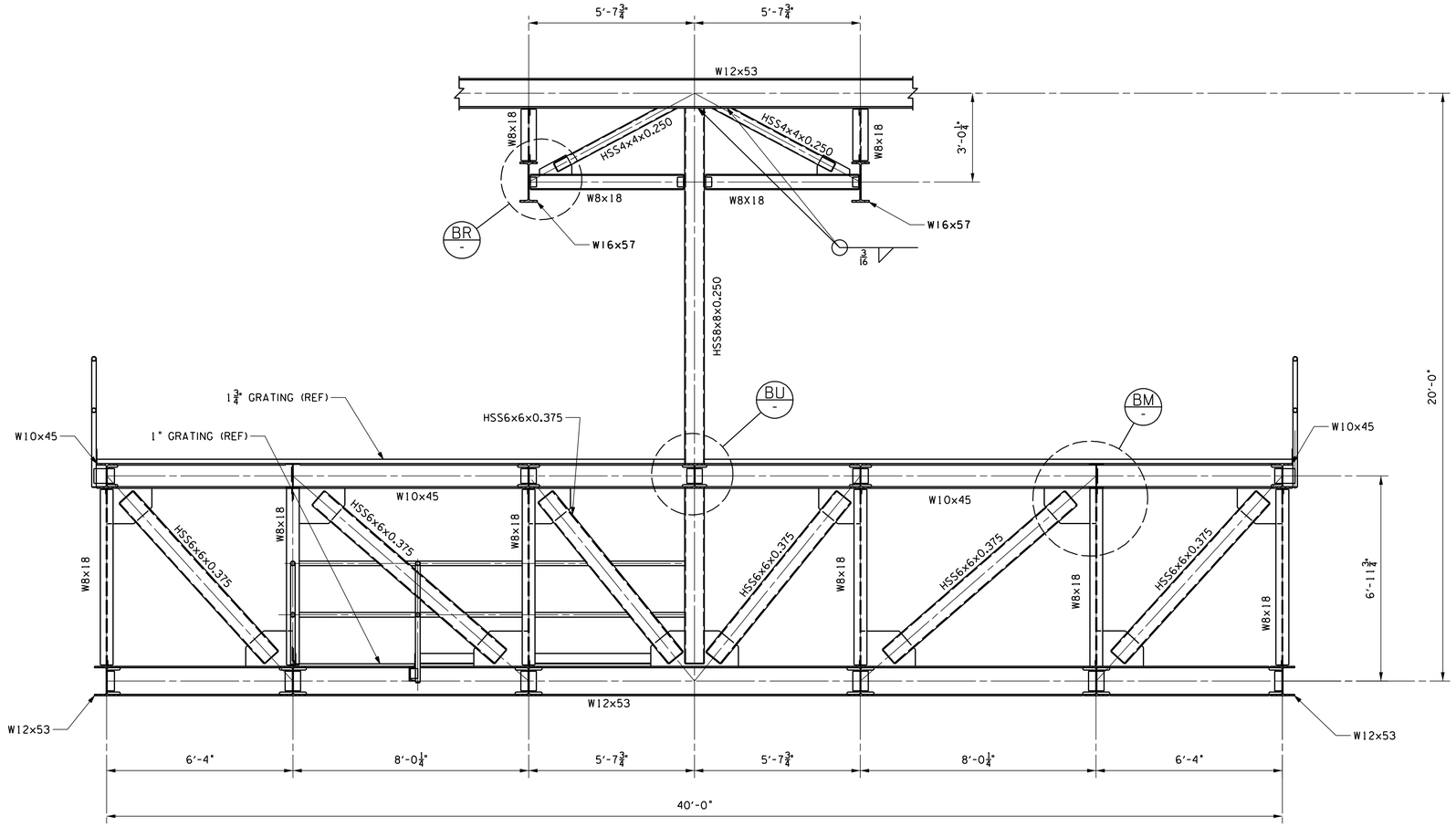

ELEVATION - CENTER TRUSS (F / S-2)
SCALE: 1/2"=1'-0"

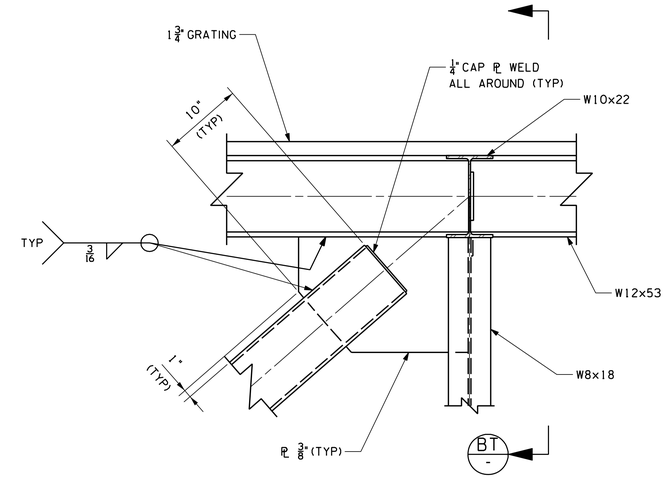

DETAIL (BM)
SCALE: 1 1/2"=1'-0"

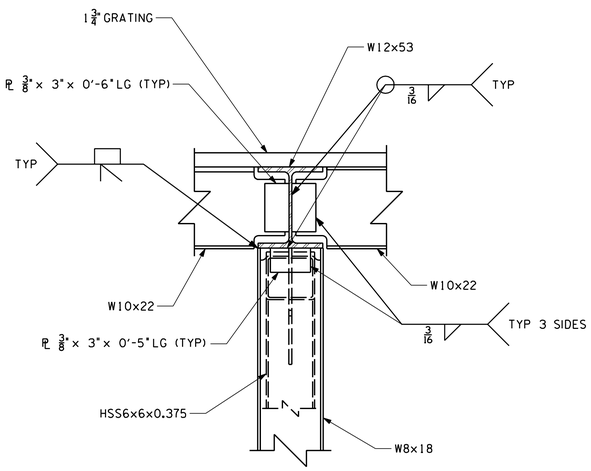

DETAIL (BT)
SCALE: 1 1/2"=1'-0"

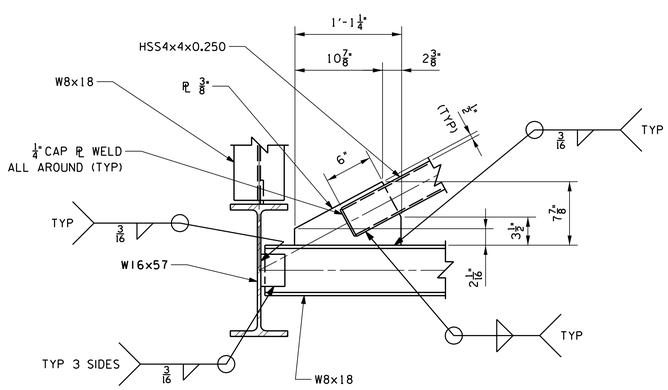

DETAIL (BR)
SCALE: 1 1/2"=1'-0"

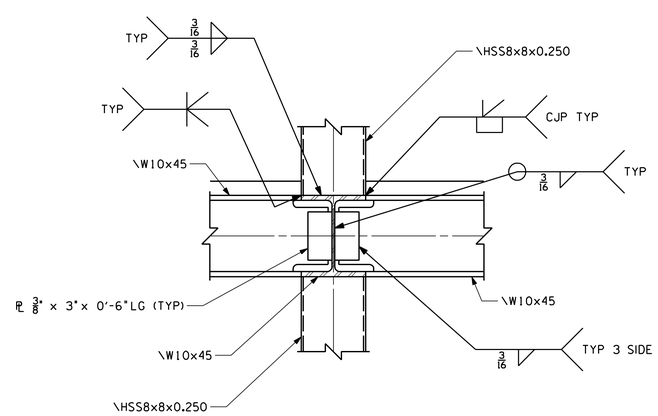

DETAIL (BU)
SCALE: 1 1/2"=1'-0"

THIS COMPUTER DRAWING WAS CREATED IN MICROSTATION AND FILED UNDER THE DRAWING NUMBER S-5

SYM	ZONE	DESCRIPTION	DATE	APPROVAL
		REVISIONS		

SIGNATURES		DATE
DRAFTER	W. MCINTOSH	2008/09/19
CHECKER	G. NEELY	2008/09/19
ENGINEER	Z. JAKSETIC	2008/09/19
SUBMITTED		
APPROVED	S. KUGELMANN	DATE 2008/09/19
TITLE	USA 15145	MGR 1

NATIONAL AERONAUTICS AND SPACE ADMINISTRATION
JOHN F. KENNEDY SPACE CENTER, NASA
KENNEDY SPACE CENTER, FLORIDA

LAUNCH COMPLEX 39
PAD-B
ARES I-X
VEHICLE STABILIZATION SYSTEM
PORCH ASSEMBLY (FABRICATION)
CENTER TRUSS & DETAILS

SIZE F | DWG. NO. 95K01168 | REV
PROJ. NO. | SHEET 6 OF

KSC FORM 1-11 (REV. 3/76) (CIG 3/93)

NOTICE = WHEN GOVERNMENT DRAWINGS, SPECIFICATIONS, OR OTHER DATA ARE USED FOR ANY PURPOSE OTHER THAN IN CONNECTION WITH A DEFINITELY RELATED GOVERNMENT PROCUREMENT OPERATION, THE UNITED STATES GOVERNMENT THEREBY INCURS NO RESPONSIBILITY NOR ANY OBLIGATION WHATSOEVER; AND THE FACT THAT THE GOVERNMENT MAY HAVE FORMULATED, FURNISHED, OR IN ANY WAY SUPPLIED THE SAID DRAWINGS, SPECIFICATIONS OR ANY OTHER DATA IS NOT TO BE REGARDED BY IMPLICATION OR OTHERWISE IN ANY MANNER LICENSING THE HOLDER OR ANY OTHER PERSON OR CORPORATION, OR CONVEYING ANY RIGHTS OR PERMISSION TO MANUFACTURE, USE, OR SELL ANY PATENTED INVENTION THAT IN ANY WAY BE RELATED THERETO.

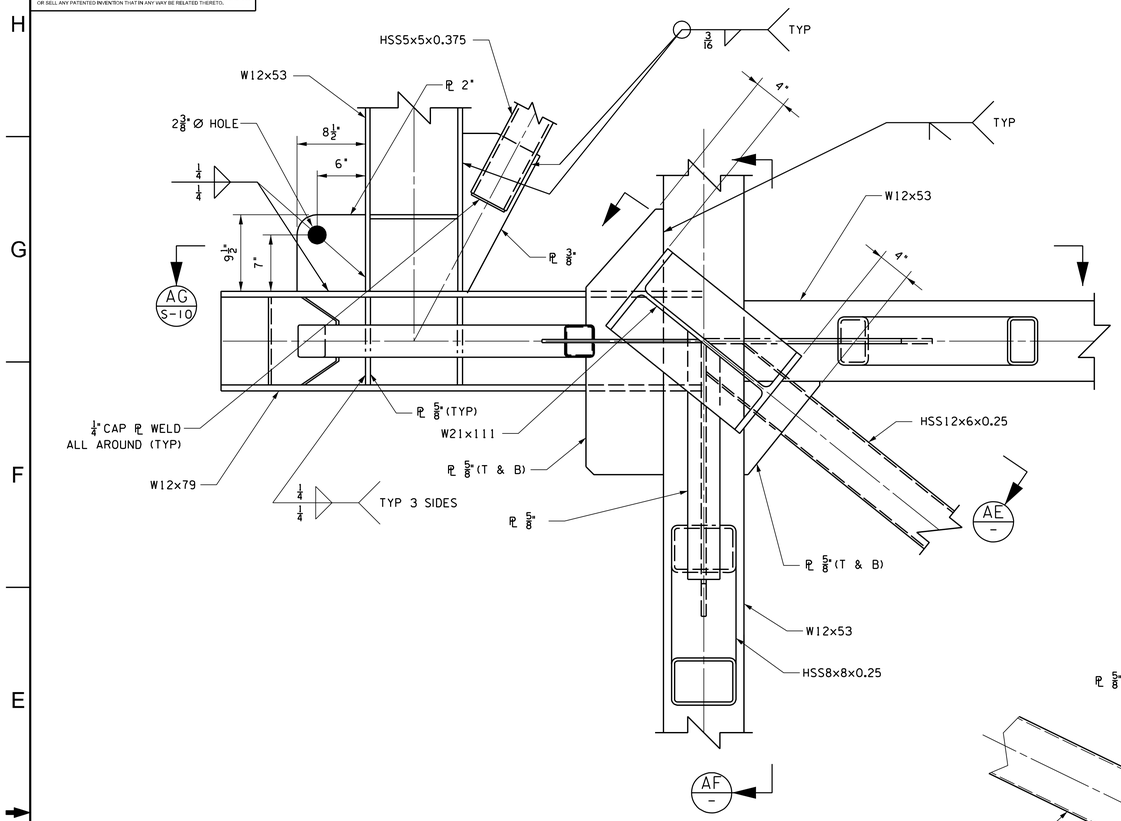

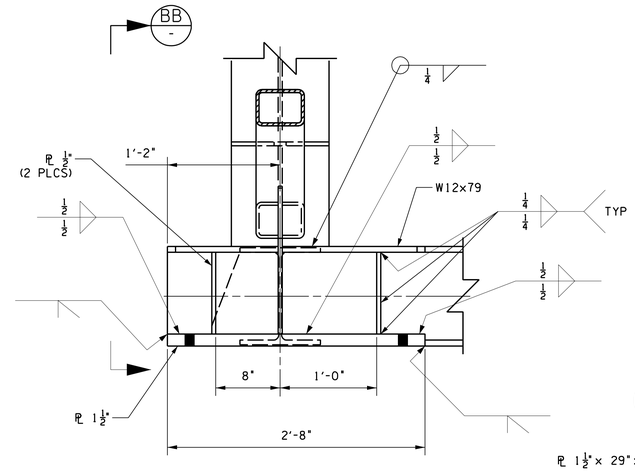

SECTION Y S-3
SCALE: 1½"=1'-0"

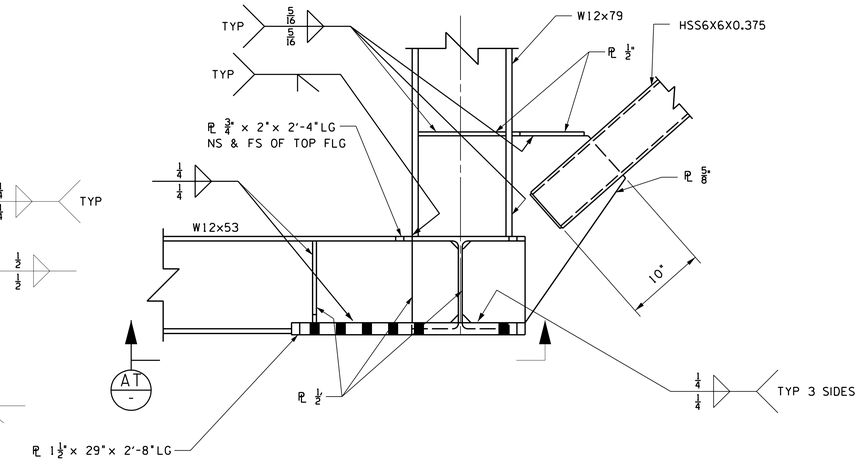

SECTION BB -
SCALE: 1½"=1'-0"

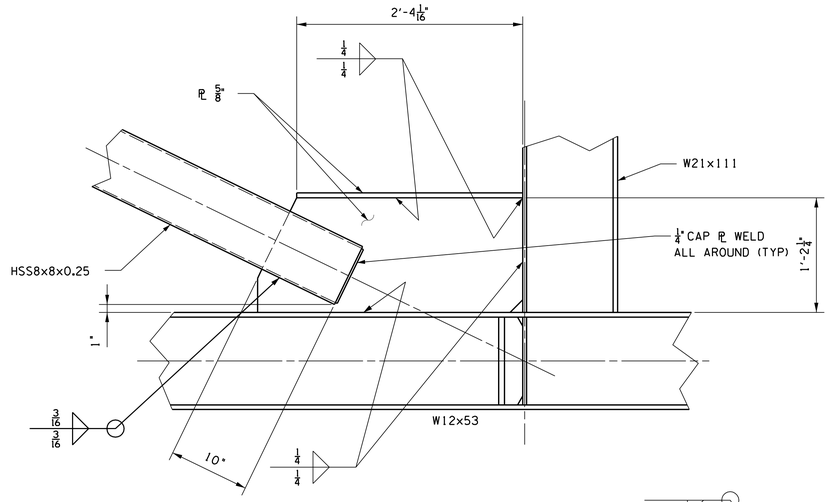

SECTION AF -
SCALE: 1½"=1'-0"

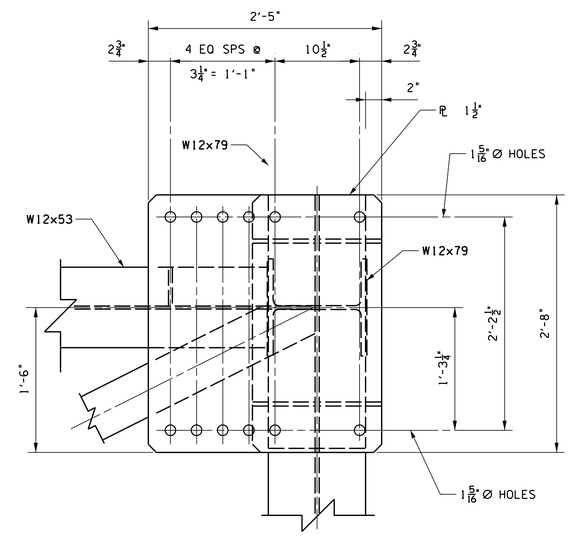

SECTION AT -
SCALE: 1½"=1'-0"

DETAIL V S-3 (SHOWN)

DETAIL CY S-2 (SIMILAR)
SCALE: 1½"=1'-0"

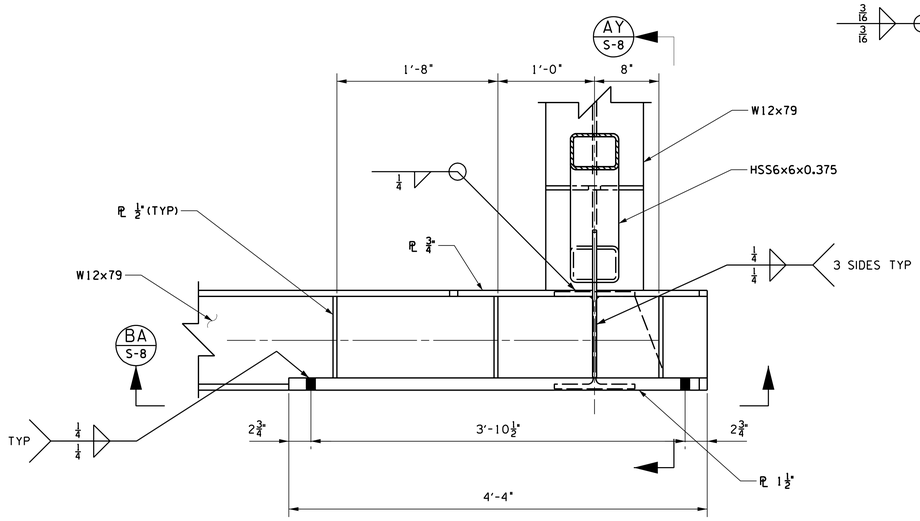

DETAIL BC S-3
SCALE: 1½"=1'-0"

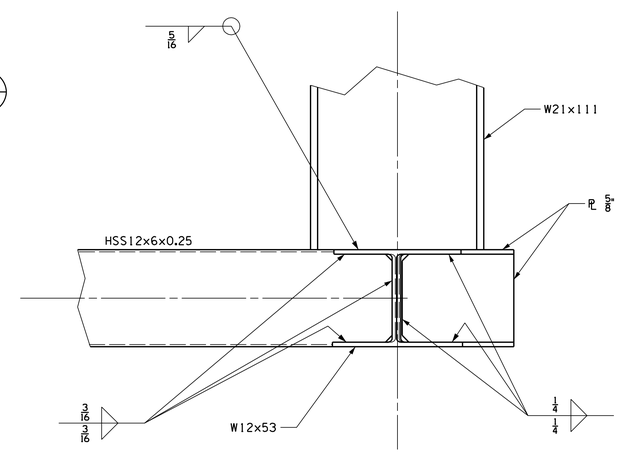

SECTION AE -
SCALE: 1½"=1'-0"

THIS COMPUTER DRAWING WAS CREATED IN MICROSTATION AND FILED UNDER THE DRAWING NUMBER

S-6

SYM	ZONE	DESCRIPTION	DATE	APPROVAL
		REVISIONS		

SIGNATURES		DATE
DRAFTER	W. MCINTOSH	2008/09/19
CHECKER	G. NEELY	2008/09/19
ENGINEER	Z. JAKSETIC	2008/09/19
SUBMITTED		
APPROVED	S. KUGELMANN	2008/09/19

NATIONAL AERONAUTICS AND SPACE ADMINISTRATION
JOHN F. KENNEDY SPACE CENTER, NASA
KENNEDY SPACE CENTER, FLORIDA

LAUNCH COMPLEX 39
PAD-B
ARES I-X
VEHICLE STABILIZATION SYSTEM
PORCH ASSEMBLY (FABRICATION)
SECTIONS & DETAILS

SIZE F | DWG. NO. 95K01168 | REV

TITLE USA 15145 MGR 1 | PROJ. NO. | SHEET 7 OF

KSC FORM 1-11 (REV. 3/16) (CD 3/93)

NOTICE = WHEN GOVERNMENT DRAWINGS, SPECIFICATIONS, OR OTHER DATA ARE USED FOR ANY PURPOSE OTHER THAN IN CONNECTION WITH A DEFINITELY RELATED GOVERNMENT PROCUREMENT OPERATION, THE UNITED STATES GOVERNMENT THEREBY INCURS NO RESPONSIBILITY NOR ANY OBLIGATION WHATSOEVER, AND THE FACT THAT THE GOVERNMENT MAY HAVE FORMULATED, FURNISHED, OR IN ANY WAY SUPPLIED THE SAID DRAWINGS, SPECIFICATIONS OR ANY OTHER DATA IS NOT TO BE REGARDED BY IMPLICATION OR OTHERWISE IN ANY MANNER LICENSING THE HOLDER OR ANY OTHER PERSONS OR CORPORATION, OR CONVEYING ANY RIGHTS OR PERMISSION TO MANUFACTURE, USE, OR SELL ANY PATENTED INVENTION THAT IN ANY WAY BE RELATED THERETO.

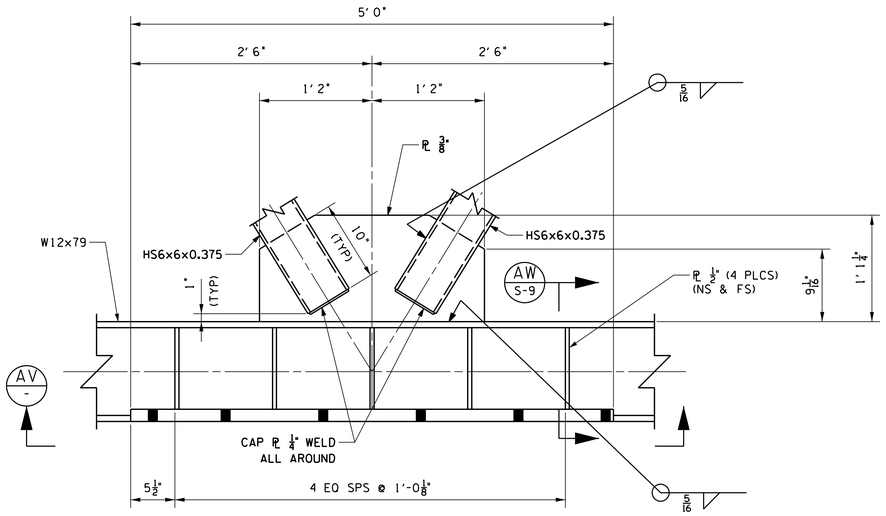

SECTION AU S-3
SCALE: 1 1/2" = 1'-0"

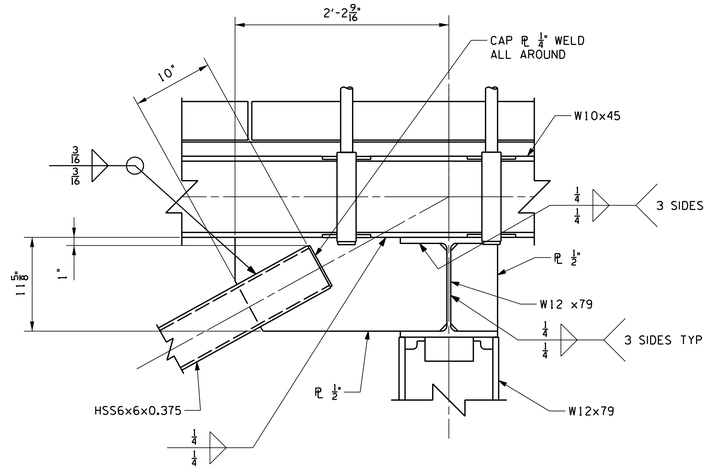

DETAIL BL S-2
SCALE: 1 1/2"=1'-0"

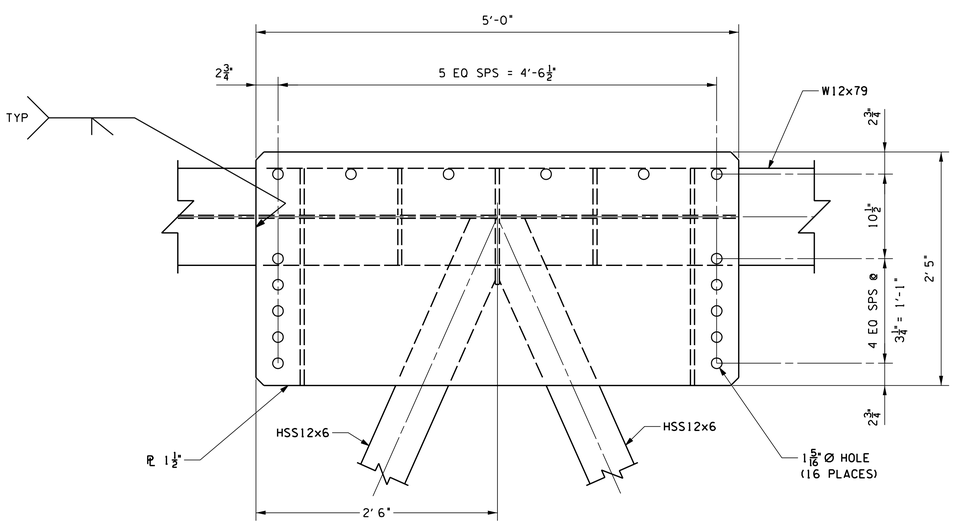

SECTION AV -
SCALE: 1 1/2" = 1'-0"

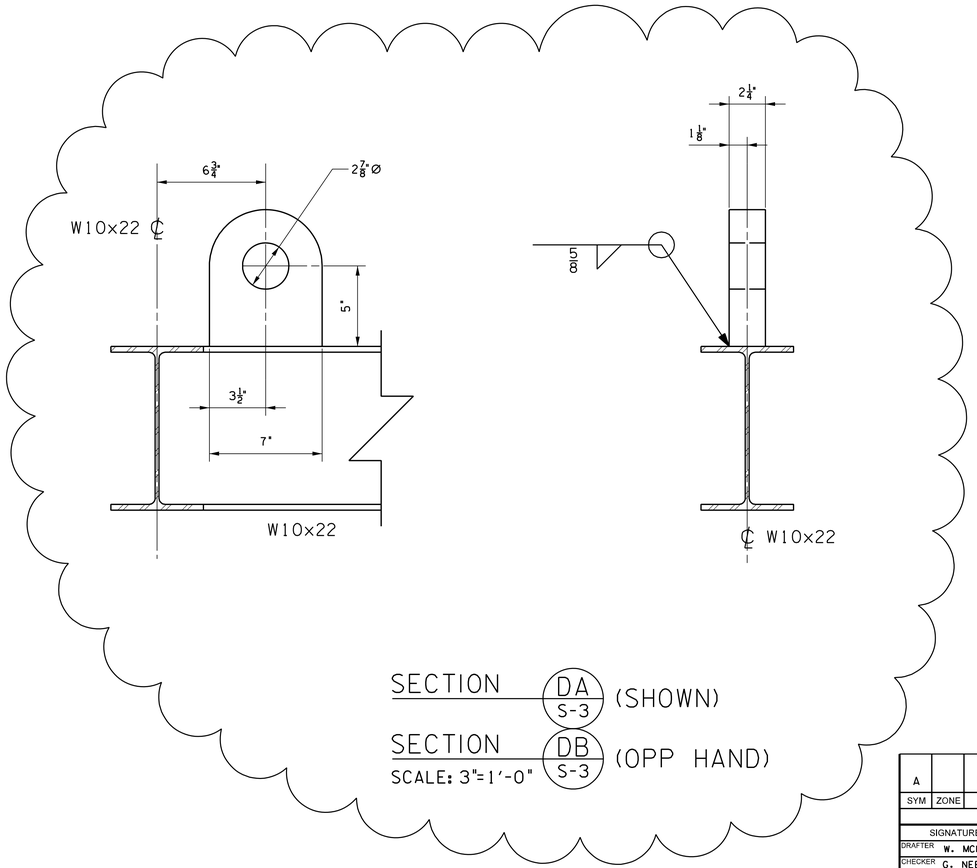

SECTION DA S-3 (SHOWN)

SECTION DB S-3 (OPP HAND)
SCALE: 3"=1'-0"

THIS COMPUTER DRAWING WAS CREATED IN MICROSTATION AND FILED UNDER THE DRAWING NUMBER S-7

SYM	ZONE	DESCRIPTION	DATE	APPROVAL
A		ADDED SECTIONS DA & DB MOVED DETAIL 'BE' TO S-8	2008/11/04	S. KUGELMANN

REVISIONS

SIGNATURES		DATE
DRAFTER	W. MCINTOSH	2008/09/19
CHECKER	G. NEELY	2008/09/19
ENGINEER	Z. JAKSETIC	2008/09/19
SUBMITTED		
APPROVED	S. KUGELMANN	DATE 2008/09/19
TITLE	USA 15145	MGR 1

NATIONAL AERONAUTICS AND SPACE ADMINISTRATION
JOHN F. KENNEDY SPACE CENTER, NASA
KENNEDY SPACE CENTER, FLORIDA

LAUNCH COMPLEX 39
PAD-B
ARES I-X
VEHICLE STABILIZATION SYSTEM
PORCH ASSEMBLY (FABRICATION)
SECTIONS & DETAILS

SIZE F | DWG. NO. 95K01168 | REV A
PROJ. NO. | SHEET 8 OF

KSC FORM 1-11 (REV. 3/76) (C/G 3/93)

NOTICE = WHEN GOVERNMENT DRAWINGS, SPECIFICATIONS, OR OTHER DATA ARE USED FOR ANY PURPOSE OTHER THAN IN CONNECTION WITH A DEFINITELY RELATED GOVERNMENT PROCUREMENT OPERATION, THE UNITED STATES GOVERNMENT THEREBY INCURRS NO RESPONSIBILITY NOR ANY OBLIGATION WHATSOEVER; AND THE FACT THAT THE GOVERNMENT MAY HAVE FORMULATED, FURNISHED, OR IN ANY WAY SUPPLIED THE SAID DRAWINGS, SPECIFICATIONS OR ANY OTHER DATA IS NOT TO BE REGARDED BY IMPLICATION OR OTHERWISE IN ANY MANNER LICENSING THE HOLDER OR ANY OTHER PERSON OR CORPORATION, OR CONVEYING ANY RIGHTS OR PERMISSION TO MANUFACTURE, USE OR SELL ANY PATENTED INVENTION THAT IN ANY WAY BE RELATED THERETO.

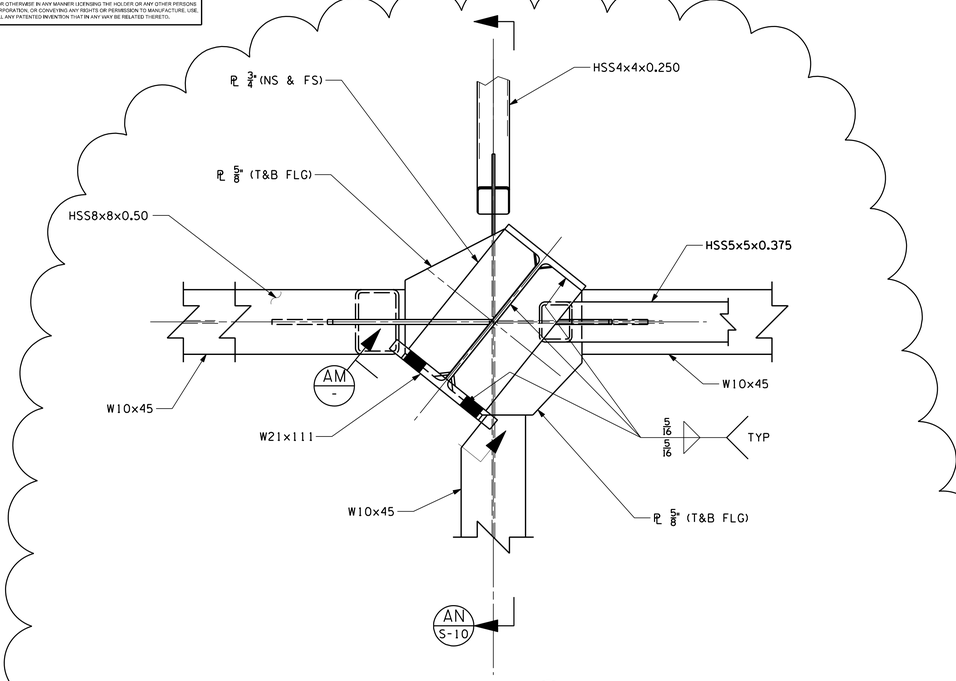

DETAIL (BT / S-3) SCALE: 1 1/2"=1'-0" ROTATED 90° CW

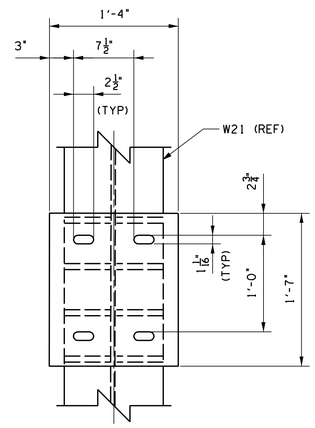

VIEW (AM / -) SCALE: 1 1/2"=1'-0"

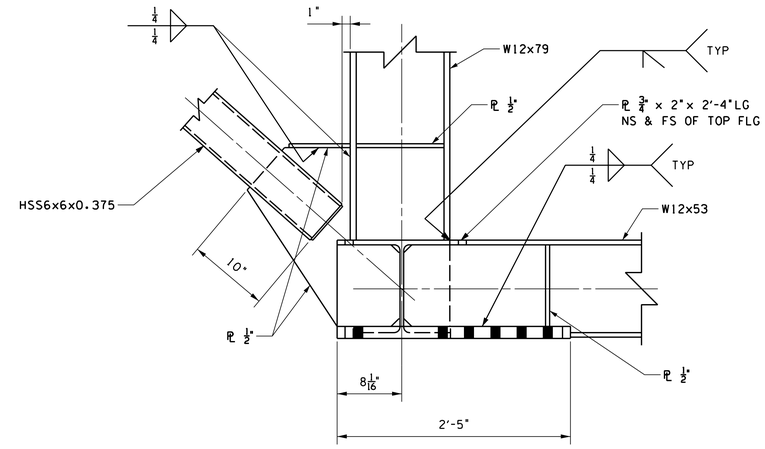

DETAIL (AY / S-6) SCALE: 1 1/2"=1'-0"

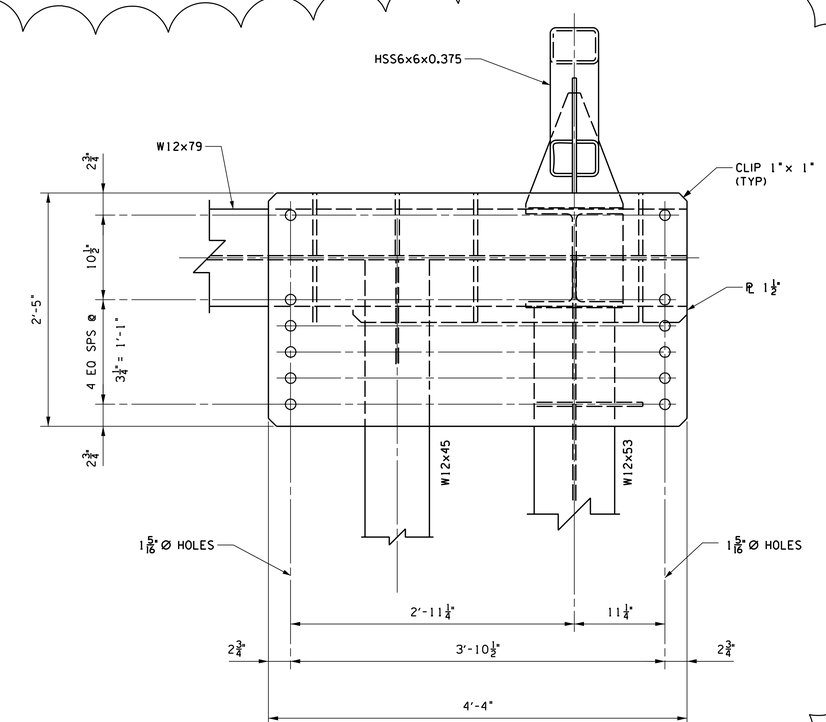

DETAIL (BA / S-6) SCALE: 1 1/2"=1'-0"

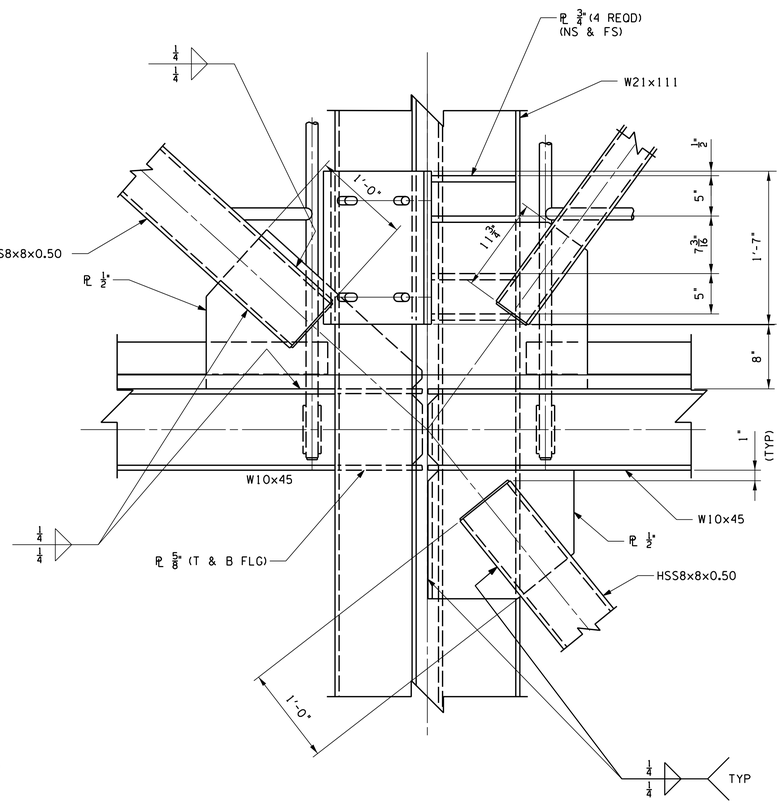

DETAIL (T / S-2) SCALE: 1 1/2"=1'-0"

SYM	ZONE	DESCRIPTION	DATE	APPROVAL
A		INCORPORATED REDLINE CHANGES	2008/11/04	S. KUGELMANN

REVISIONS

SIGNATURES		DATE
DRAFTER	W. MCINTOSH	2008/09/19
CHECKER	G. NEELY	2008/09/19
ENGINEER	Z. JAKSETIC	2008/09/19
SUBMITTED		
APPROVED	S. KUGELMANN	2008/09/19

NATIONAL AERONAUTICS AND SPACE ADMINISTRATION
JOHN F. KENNEDY SPACE CENTER, NASA
KENNEDY SPACE CENTER, FLORIDA

LAUNCH COMPLEX 39
PAD-B
ARES I-X
VEHICLE STABILIZATION SYSTEM
PORCH ASSEMBLY (FABRICATION)
SECTIONS & DETAILS

SIZE F | DWG. NO. 95K01168 | REV A

TITLE USA 15145 MGR 1 | PROJ. NO. | SHEET 9 OF

THIS COMPUTER DRAWING WAS CREATED IN MICROSTATION AND FILED UNDER THE DRAWING NUMBER S-8

KSC FORM 1-11 (REV. 3/76) (CAD 393)

PAGE 1 - 10-2001

NOTICE – WHEN GOVERNMENT DRAWINGS, SPECIFICATIONS, OR OTHER DATA ARE USED FOR ANY PURPOSE OTHER THAN IN CONNECTION WITH A DEFINITELY RELATED GOVERNMENT PROCUREMENT OPERATION THE UNITED STATES GOVERNMENT THEREBY INCURS NO RESPONSIBILITY NOR ANY OBLIGATION WHATSOEVER; AND THE FACT THAT THE GOVERNMENT MAY HAVE FORMULATED, FURNISHED, OR IN ANY WAY SUPPLIED THE SAID DRAWINGS, SPECIFICATIONS OR ANY OTHER DATA IS NOT TO BE REGARDED BY IMPLICATION OR OTHERWISE IN ANY MANNER LICENSING THE HOLDER OR ANY OTHER PERSONS OR CORPORATION OR CONVEYING ANY RIGHTS OR PERMISSION TO MANUFACTURE, USE, OR SELL ANY PATENTED INVENTION THAT IN ANY WAY BE RELATED THERETO.

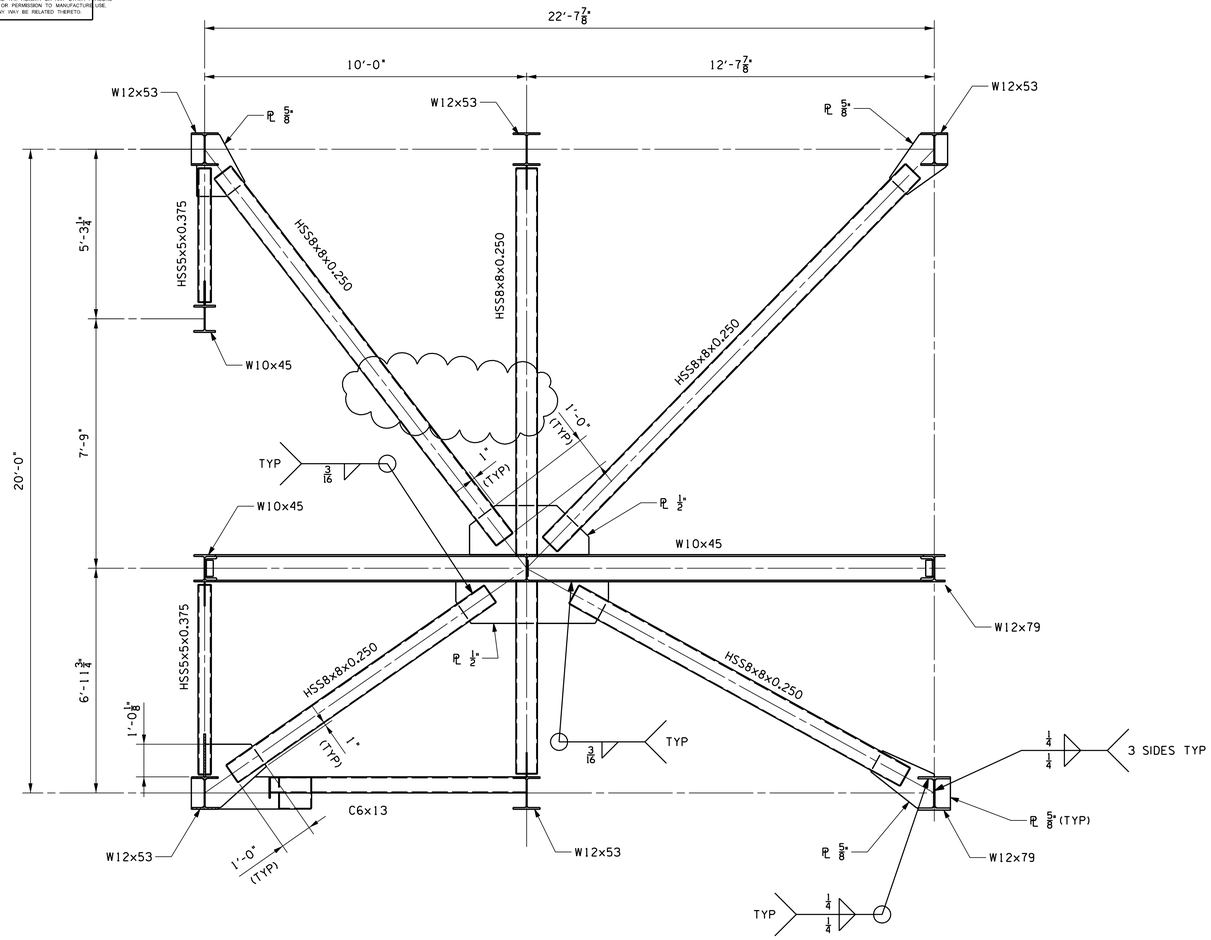

SECTION L S-2
SCALE: 1 1/2"=1'-0"

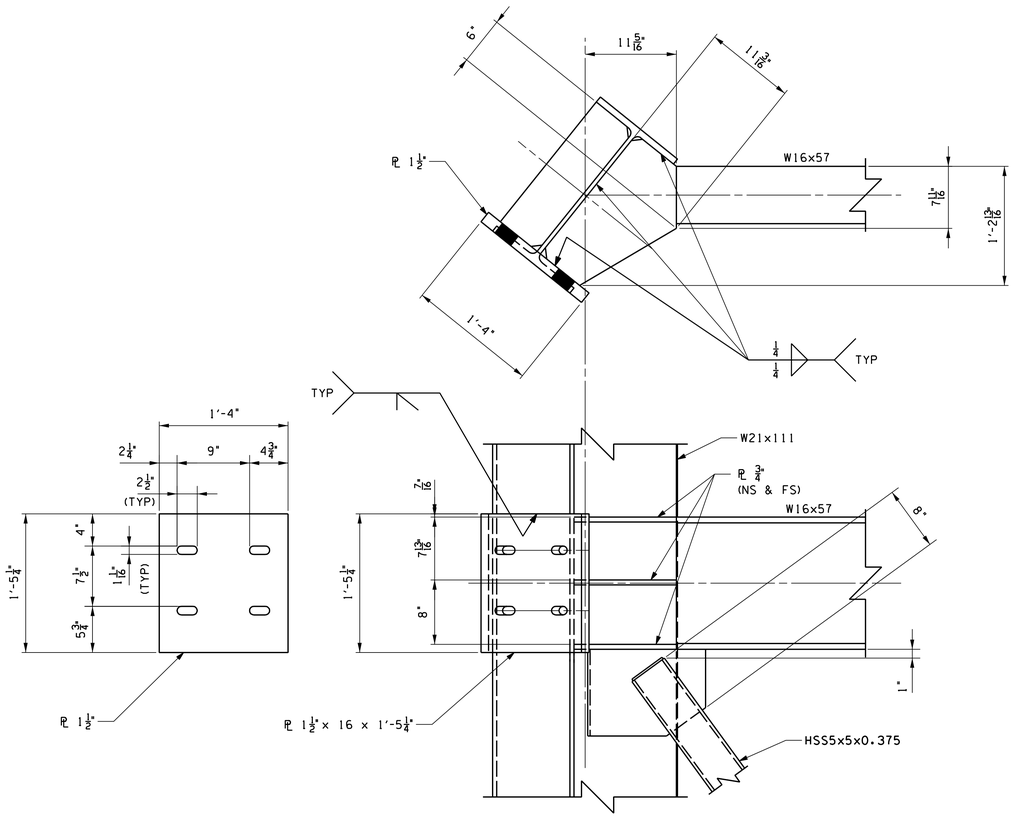

SECTION U S-2
SCALE: 1 1/2"=1'-0"

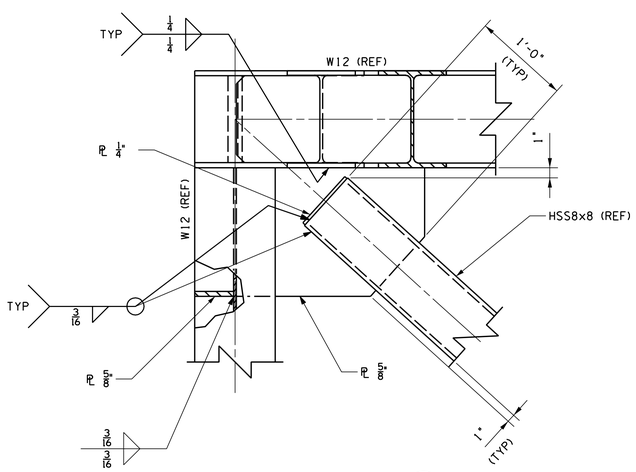

DETAIL BF S-2
SCALE: 1 1/2"=1'-0"

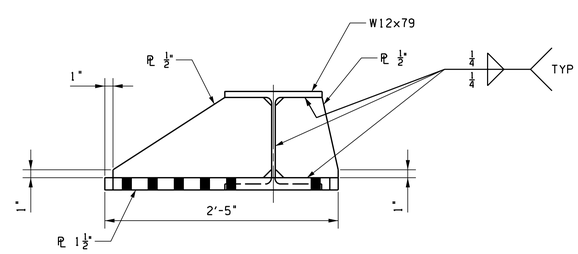

SECTION AW S-7
SCALE: 1 1/2"= 1'-0"

SYM	ZONE	DESCRIPTION	DATE	APPROVAL
A		INCORPORATED REDLINE CHANGES	2008/11/04	S. KUGELMANN

REVISIONS

SIGNATURES		DATE
DRAFTER	W. MCINTOSH	2008/09/19
CHECKER	G. NEELY	2008/09/19
ENGINEER	Z. JAKSETIC	2008/09/19
SUBMITTED		
APPROVED	S. KUGELMANN	2008/09/19
TITLE	USA 15145 MGR 1	

NATIONAL AERONAUTICS AND SPACE ADMINISTRATION
JOHN F. KENNEDY SPACE CENTER, NASA
KENNEDY SPACE CENTER, FLORIDA

LAUNCH COMPLEX 39
PAD-B
ARES I-X
VEHICLE STABILIZATION SYSTEM
PORCH ASSEMBLY (FABRICATION)
SECTIONS & DETAILS

SIZE F | DWG. NO. 95K01168 | REV A
PROJ. NO. | SHEET 10 OF

THIS COMPUTER DRAWING WAS CREATED IN MICROSTATION AND FILED UNDER THE DRAWING NUMBER S-9

KSC FORM 1-11 (REV. 3/78) (CIG 3-93)

NOTICE = WHEN GOVERNMENT DRAWINGS, SPECIFICATIONS, OR OTHER DATA ARE USED FOR ANY PURPOSE OTHER THAN IN CONNECTION WITH A DEFINITELY RELATED GOVERNMENT PROCUREMENT OPERATION, THE UNITED STATES GOVERNMENT THEREBY INCURS NO RESPONSIBILITY NOR ANY OBLIGATION WHATSOEVER; AND THE FACT THAT THE GOVERNMENT MAY HAVE FORMULATED, FURNISHED, OR IN ANY WAY SUPPLIED THE SAID DRAWINGS, SPECIFICATIONS OR ANY OTHER DATA IS NOT TO BE REGARDED BY IMPLICATION OR OTHERWISE IN ANY MANNER LICENSING THE HOLDER OR ANY OTHER PERSON OR CORPORATION, OR CONVEYING ANY RIGHTS OR PERMISSION TO MANUFACTURE, USE, OR SELL ANY PATENTED INVENTION THAT IN ANY WAY BE RELATED THERETO.

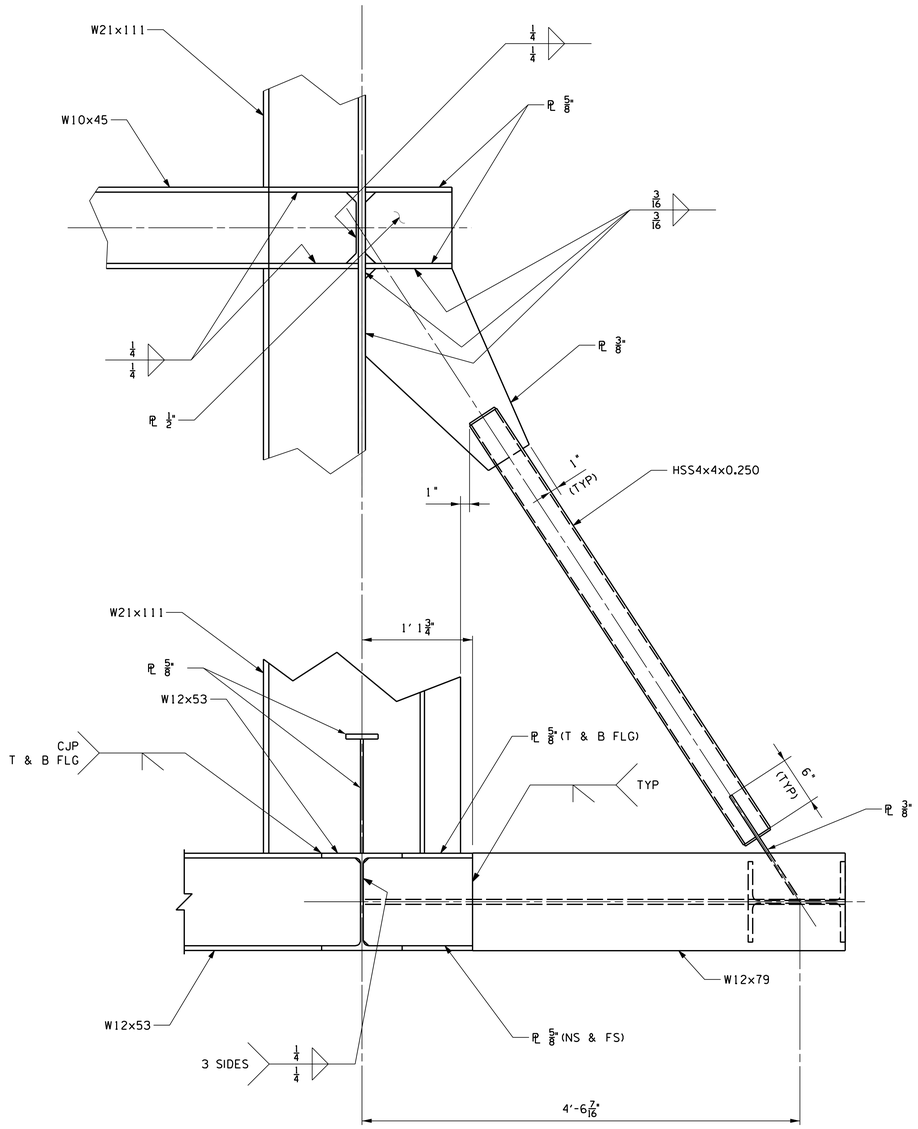

SECTION AG S-6
SECTION AN S-8
SCALE: 1 1/2"=1'-0"

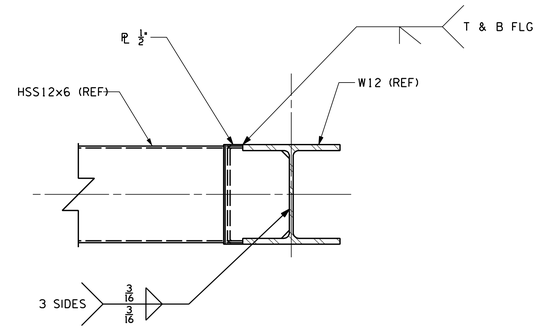

SECTION N S-2
SECTION N S-3
SCALE: 1 1/2"=1'-0"

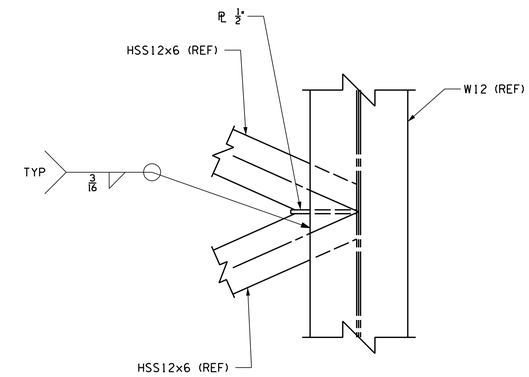

DETAIL P S-2
SCALE: 1 1/2"=1'-0"

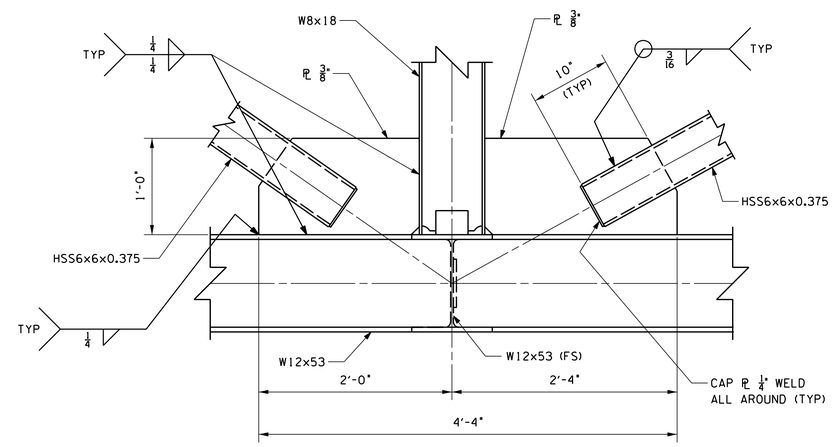

DETAIL R S-2
SCALE: 1 1/2"=1'-0"

THIS COMPUTER DRAWING WAS CREATED IN MICROSTATION AND FILED UNDER THE DRAWING NUMBER

S-10

SYM	ZONE	DESCRIPTION	DATE	APPROVAL
		REVISIONS		

SIGNATURES		DATE
DRAFTER	W. MCINTOSH	2008/09/19
CHECKER	G. NEELY	2008/09/19
ENGINEER	Z. JAKSETIC	2008/09/19
SUBMITTED		
APPROVED	S. KUGELMANN	2008/09/19
TITLE	USA 15145 MGR 1	

NATIONAL AERONAUTICS AND SPACE ADMINISTRATION
JOHN F. KENNEDY SPACE CENTER, NASA
KENNEDY SPACE CENTER, FLORIDA

LAUNCH COMPLEX 39
PAD-B
ARES I-X
VEHICLE STABILIZATION SYSTEM
PORCH ASSEMBLY (FABRICATION)
SECTIONS & DETAILS

SIZE F | DWG. NO. 95K01168 | REV
PROJ. NO. | SHEET 11 OF

KSC FORM 5-11 (REV. 3/76) (CID 3/93)

NOTICE = WHEN GOVERNMENT DRAWINGS, SPECIFICATIONS, OR OTHER DATA ARE USED FOR ANY PURPOSE OTHER THAN IN CONNECTION WITH A DEFINITELY RELATED GOVERNMENT PROCUREMENT OPERATION, THE UNITED STATES GOVERNMENT THEREBY INCURS NO RESPONSIBILITY NOR ANY OBLIGATION WHATSOEVER; AND THE FACT THAT THE GOVERNMENT MAY HAVE FORMULATED, FURNISHED, OR IN ANY WAY SUPPLIED THE SAID DRAWINGS, SPECIFICATIONS OR ANY OTHER DATA IS NOT TO BE REGARDED BY IMPLICATION OR OTHERWISE IN ANY MANNER LICENSING THE HOLDER OR ANY OTHER PERSON OR CORPORATION, OR CONVEYING ANY RIGHTS OR PERMISSION TO MANUFACTURE, USE, OR SELL ANY PATENTED INVENTION THAT IN ANY WAY BE RELATED THERETO.

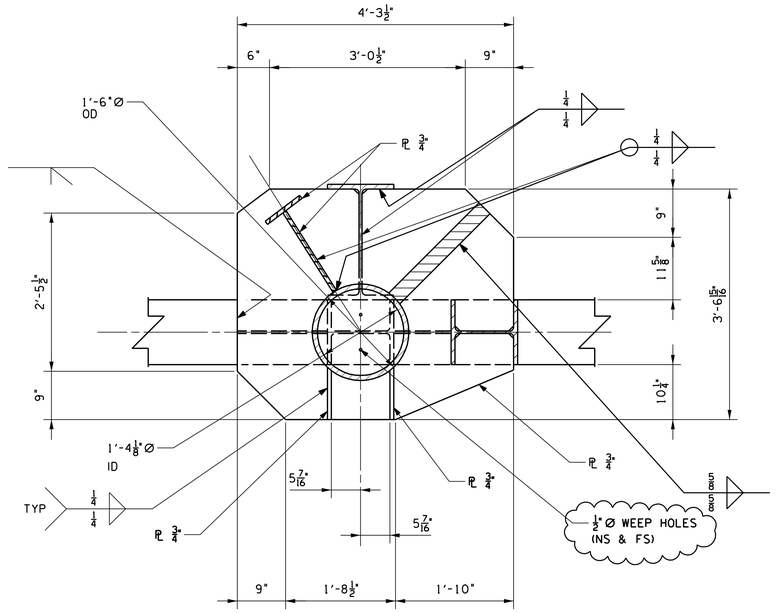

SECTION AP
SCALE: 1"=1'-0"

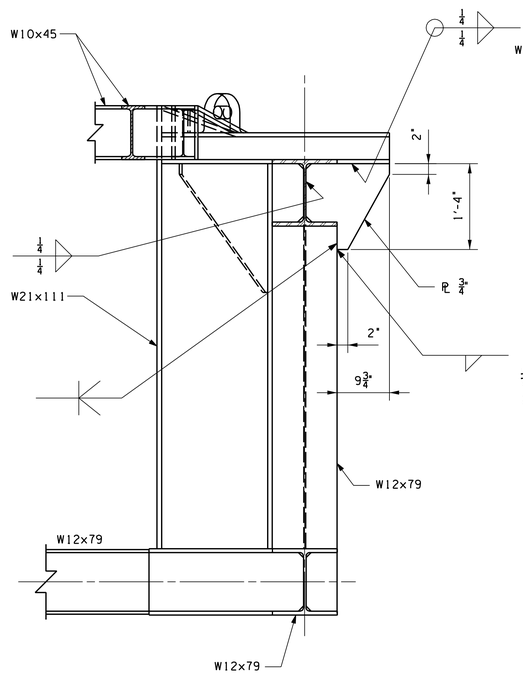

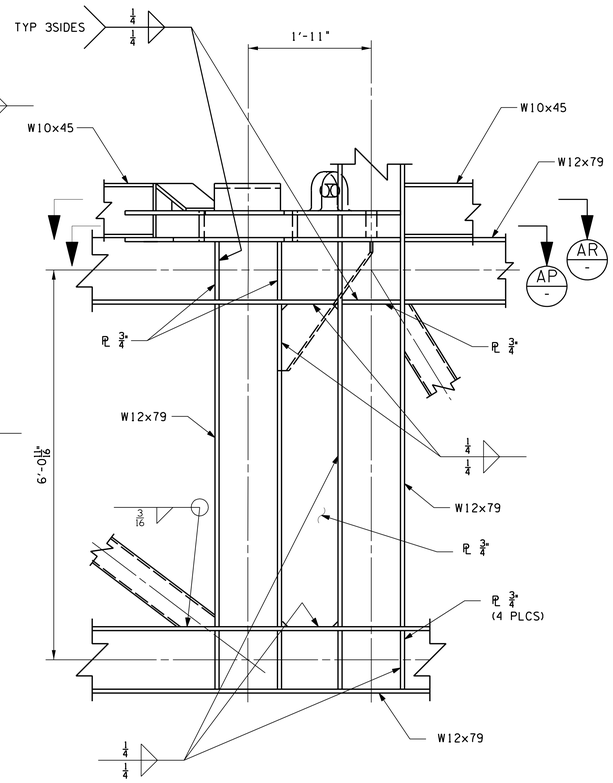

DETAIL BD
SCALE: 1"=1'-0"

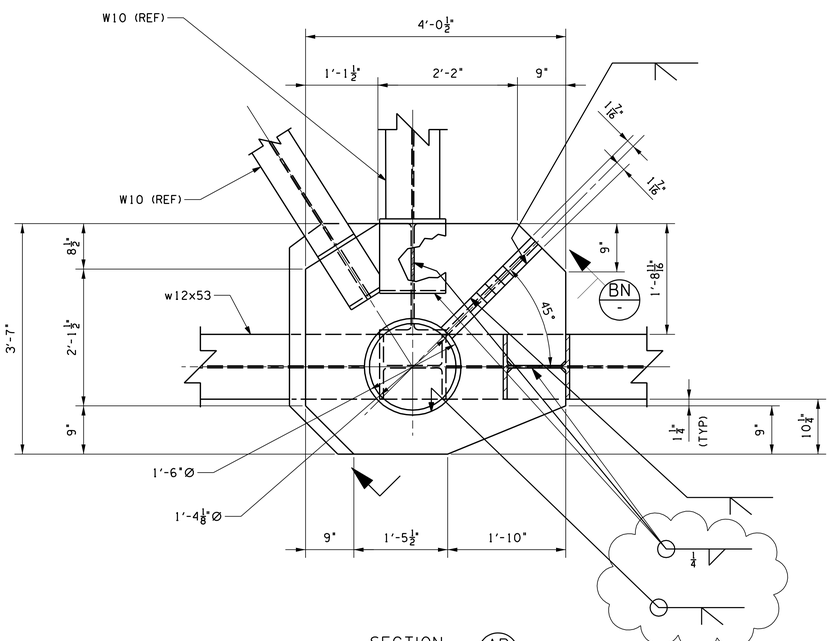

SECTION AR
SCALE: 1"=1'-0"

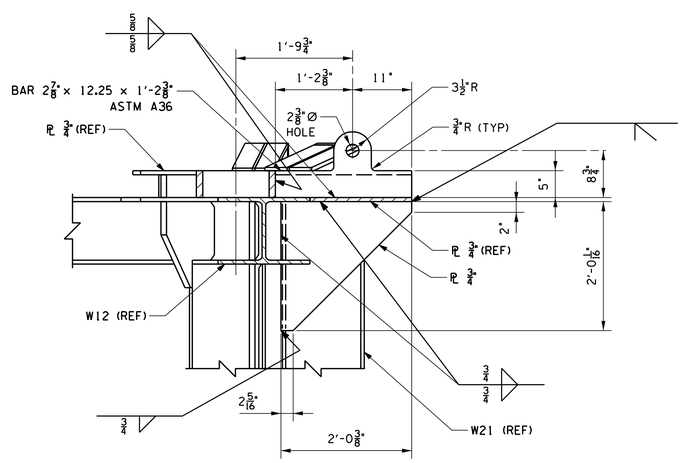

SECTION BN
SCALE: 1"=1'-0"

THIS COMPUTER DRAWING WAS CREATED IN MICROSTATION AND FILED UNDER THE DRAWING NUMBER S-11

SYM	ZONE	DESCRIPTION	DATE	APPROVAL
A		INCORPORATED REDLINE CHANGES	2008/11/04	S. KUGELMANN

REVISIONS

SIGNATURES		DATE
DRAFTER	W. MCINTOSH	2008/09/19
CHECKER	G. NEELY	2008/09/19
ENGINEER	Z. JAKSETIC	2008/09/19
SUBMITTED		
APPROVED	S. KUGELMANN	2008/09/19
TITLE	USA 15145 MGR 1	

NATIONAL AERONAUTICS AND SPACE ADMINISTRATION
JOHN F. KENNEDY SPACE CENTER, NASA
KENNEDY SPACE CENTER, FLORIDA

LAUNCH COMPLEX 39
PAD-B
ARES I-X
VEHICLE STABILIZATION SYSTEM
PORCH ASSEMBLY (FABRICATION)
LOWER HINGE WELDMENT

SIZE F | DWG. NO. 95K01168 | REV A
PROJ. NO. | SHEET 12 OF

KSC FORM 1-11 (REV. 3/76) (CIG 3/93)

NOTICE – WHEN GOVERNMENT DRAWINGS, SPECIFICATIONS, OR OTHER DATA ARE USED FOR ANY PURPOSE OTHER THAN IN CONNECTION WITH A DEFINITELY RELATED GOVERNMENT PROCUREMENT OPERATION, THE UNITED STATES GOVERNMENT THEREBY INCURS NO RESPONSIBILITY NOR ANY OBLIGATION WHATSOEVER; AND THE FACT THAT THE GOVERNMENT MAY HAVE FORMULATED, FURNISHED, OR IN ANY WAY SUPPLIED THE SAID DRAWINGS, SPECIFICATIONS OR ANY OTHER DATA IS NOT TO BE REGARDED BY IMPLICATION OR OTHERWISE IN ANY MANNER LICENSING THE HOLDER OR ANY OTHER PERSON OR CORPORATION, OR CONVEYING ANY RIGHTS OR PERMISSION TO MANUFACTURE, USE, OR SELL ANY PATENTED INVENTION THAT IN ANY WAY BE RELATED THERETO.

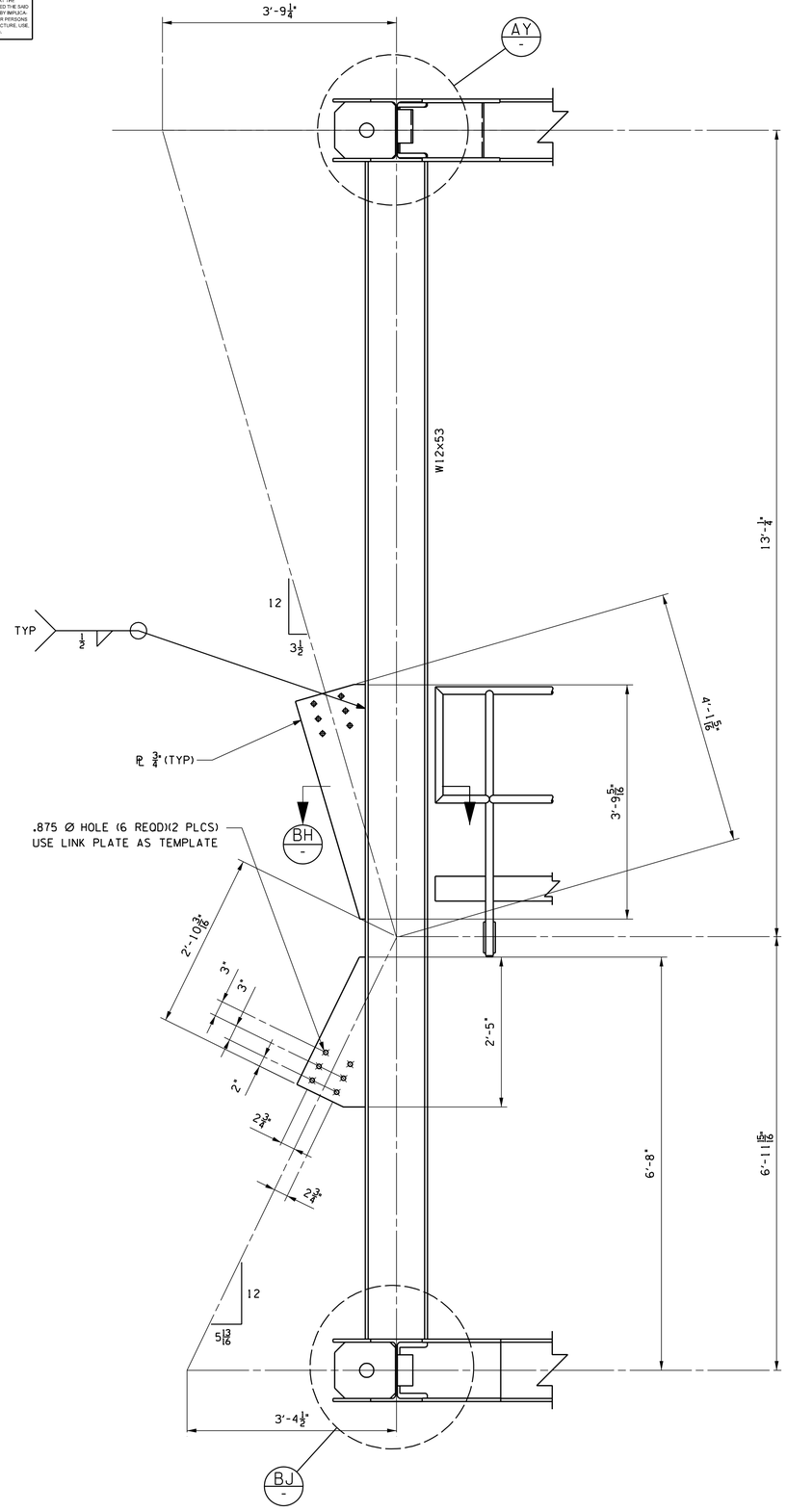

DETAIL H S-2
SCALE: 1"=1'-0"

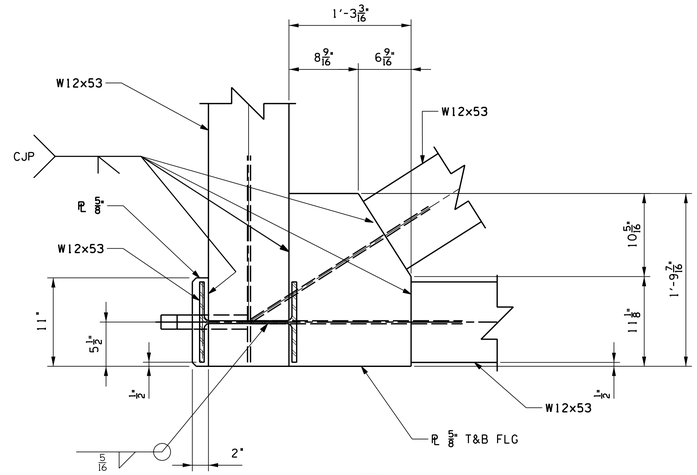

DETAIL M S-3
SCALE: 1 1/2"=1'-0"

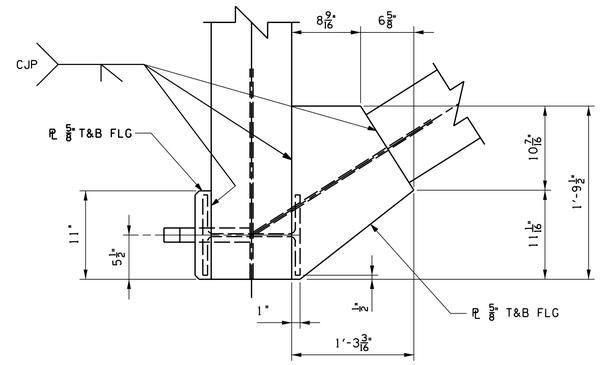

DETAIL G S-2
SCALE: 1 1/2"=1'-0"

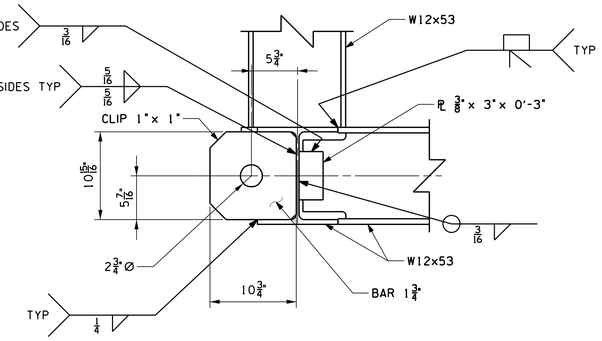

DETAIL BJ - (SHOWN)
DETAIL AY - (SIMILAR)
SCALE: 1 1/2"=1'-0"

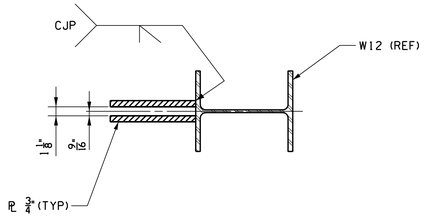

SECTION BH -
SCALE: 1 1/2"=1'-0"

SYM	ZONE	DESCRIPTION	DATE	APPROVAL
		REVISIONS		

SIGNATURES		DATE
DRAFTER	W. MCINTOSH	2008/09/19
CHECKER	G. NEELY	2008/09/19
ENGINEER	Z. JAKSETIC	2008/09/19
SUBMITTED		
APPROVED	S. KUGELMANN	2008/09/19
TITLE	USA 15145 MGR 1	

NATIONAL AERONAUTICS AND SPACE ADMINISTRATION
JOHN F. KENNEDY SPACE CENTER, NASA
KENNEDY SPACE CENTER, FLORIDA

LAUNCH COMPLEX 39
PAD-B
ARES I-X
VEHICLE STABILIZATION SYSTEM
PORCH ASSEMBLY (FABRICATION)
SECTIONS & DETAILS

SIZE F | DWG. NO. 95K01168 | REV
PROJ. NO. | SHEET 13 OF

THIS COMPUTER DRAWING WAS CREATED IN MICROSTATION AND FILED UNDER THE DRAWING NUMBER S-12

KSC FORM 1-11 (REV. 3/76) (C/G 3/93)

NOTICE = WHEN GOVERNMENT DRAWINGS, SPECIFICATIONS, OR OTHER DATA ARE USED FOR ANY PURPOSE OTHER THAN IN CONNECTION WITH A DEFINITELY RELATED GOVERNMENT PROCUREMENT OPERATION, THE UNITED STATES GOVERNMENT THEREBY INCURS NO RESPONSIBILITY NOR ANY OBLIGATION WHATSOEVER; AND THE FACT THAT THE GOVERNMENT MAY HAVE FORMULATED, FURNISHED, OR IN ANY WAY SUPPLIED THE SAID DRAWINGS, SPECIFICATIONS OR ANY OTHER DATA IS NOT TO BE REGARDED BY IMPLICATION OR OTHERWISE IN ANY MANNER LICENSING THE HOLDER OR ANY OTHER PERSON OR CORPORATION, OR CONVEYING ANY RIGHTS OR PERMISSION TO MANUFACTURE, USE, OR SELL ANY PATENTED INVENTION THAT IN ANY WAY BE RELATED THERETO.

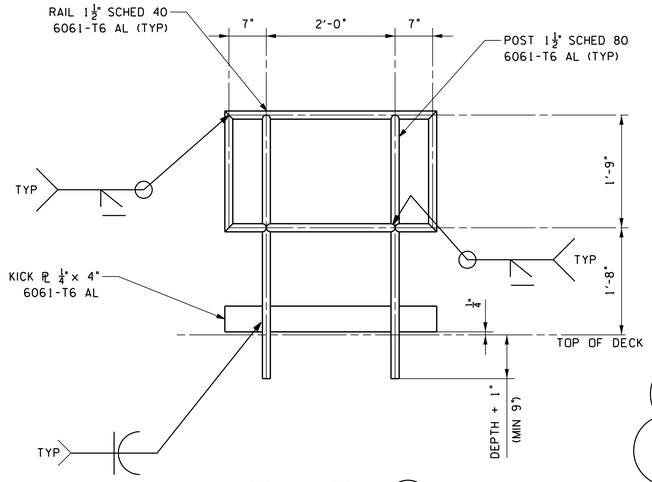

REM HANDRAIL BG S-3
SCALE: 1"=1'-0"

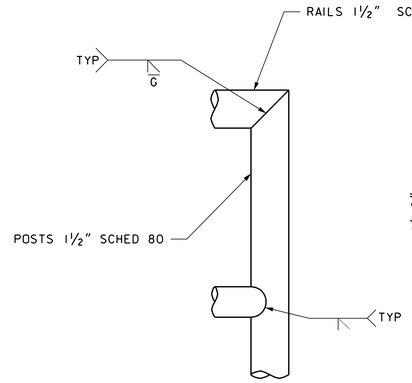

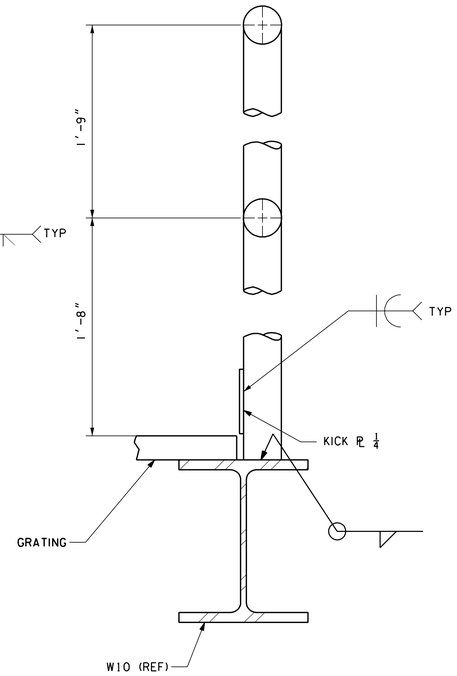

TYP FIXED HR WITH KICKPLATE TOP OF FLG
SCALE: 3"=1'-0"

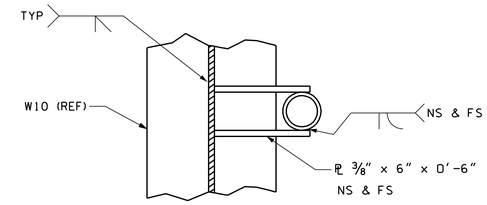

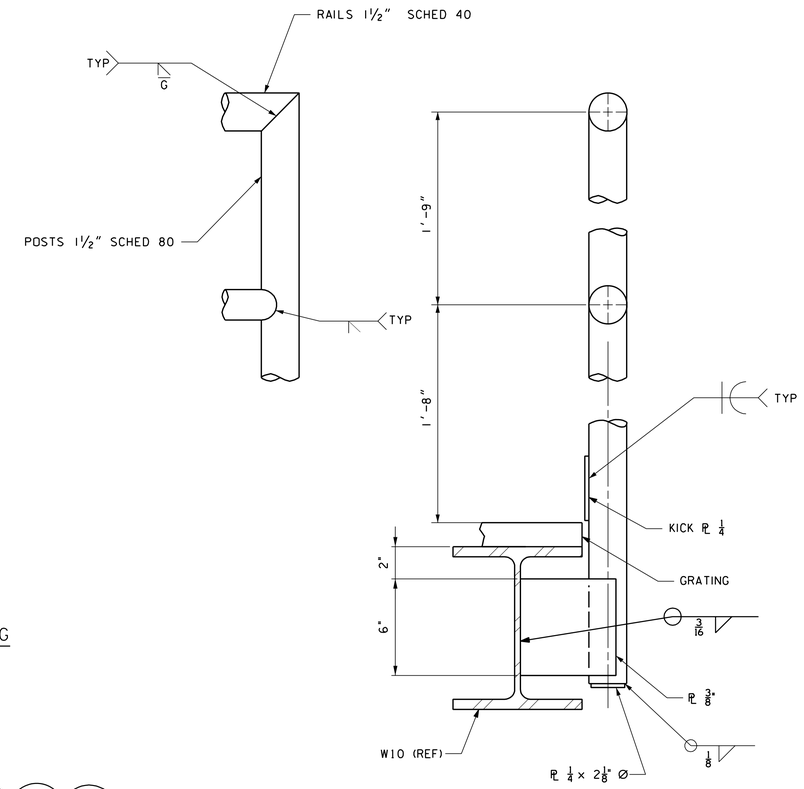

TYP FIXED HR WITH KICKPLATE
SCALE: 3"=1'-0"

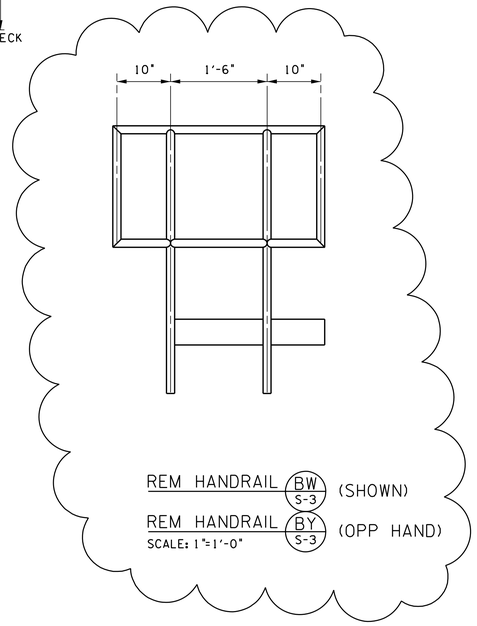

REM HANDRAIL BW S-3 (SHOWN)
REM HANDRAIL BY S-3 (OPP HAND)
SCALE: 1"=1'-0"

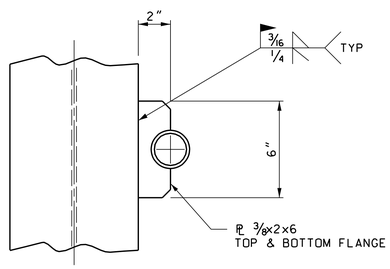

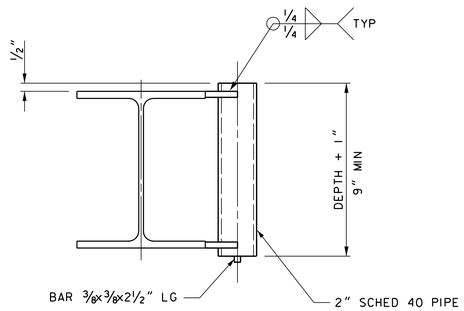

TYPICAL SOCKET DETAIL
SCALE:3"=1'-0"
SOCKET FOR 1½" DIA PIPE HANDRAIL POST

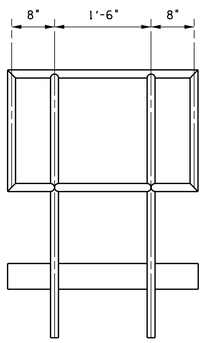

REM HANDRAIL BK S-15
SCALE: 1"=1'-0"

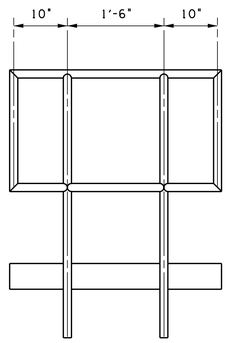

REM HANDRAIL BV S-3
SCALE: 1"=1'-0"

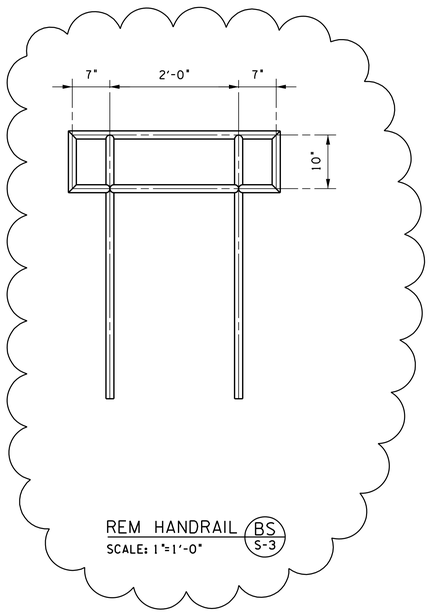

REM HANDRAIL BS S-3
SCALE: 1"=1'-0"

THIS COMPUTER DRAWING WAS CREATED IN MICROSTATION AND FILED UNDER THE DRAWING NUMBER S-13

SYM	ZONE	DESCRIPTION	DATE	APPROVAL
A		INCORPORATED REDLINE CHANGES	2008/11/04	S. KUGELMANN

REVISIONS

SIGNATURES		DATE
DRAFTER	W. MCINTOSH	2008/09/19
CHECKER	G. NEELY	2008/09/19
ENGINEER	Z. JAKSETIC	2008/09/19
SUBMITTED		
APPROVED	S. KUGELMANN	2008/09/19
TITLE	USA 15145 MGR 1	

NATIONAL AERONAUTICS AND SPACE ADMINISTRATION
JOHN F. KENNEDY SPACE CENTER, NASA
KENNEDY SPACE CENTER, FLORIDA

LAUNCH COMPLEX 39
PAD-B
ARES I-X
VEHICLE STABILIZATION SYSTEM
PORCH ASSEMBLY (FABRICATION)
HANDRAIL DETAILS

SIZE F | DWG. NO. 95K01168 | REV A
PROJ. NO. | SHEET 14 OF

KSC FORM 1-11 (REV. 3/76) (CID 3/83)

NOTICE – WHEN GOVERNMENT DRAWINGS, SPECIFICATIONS, OR OTHER DATA ARE USED FOR ANY PURPOSE OTHER THAN IN CONNECTION WITH A DEFINITELY RELATED GOVERNMENT PROCUREMENT OPERATION, THE UNITED STATES GOVERNMENT THEREBY INCURS NO RESPONSIBILITY NOR ANY OBLIGATION WHATSOEVER; AND THE FACT THAT THE GOVERNMENT MAY HAVE FORMULATED, FURNISHED, OR IN ANY WAY SUPPLIED THE SAID DRAWINGS, SPECIFICATIONS OR ANY OTHER DATA IS NOT TO BE REGARDED BY IMPLICATION OR OTHERWISE IN ANY MANNER LICENSING THE HOLDER OR ANY OTHER PERSON OR CORPORATION, OR CONVEYING ANY RIGHTS OR PERMISSION TO MANUFACTURE, USE, OR SELL ANY PATENTED INVENTION THAT IN ANY WAY BE RELATED THERETO.

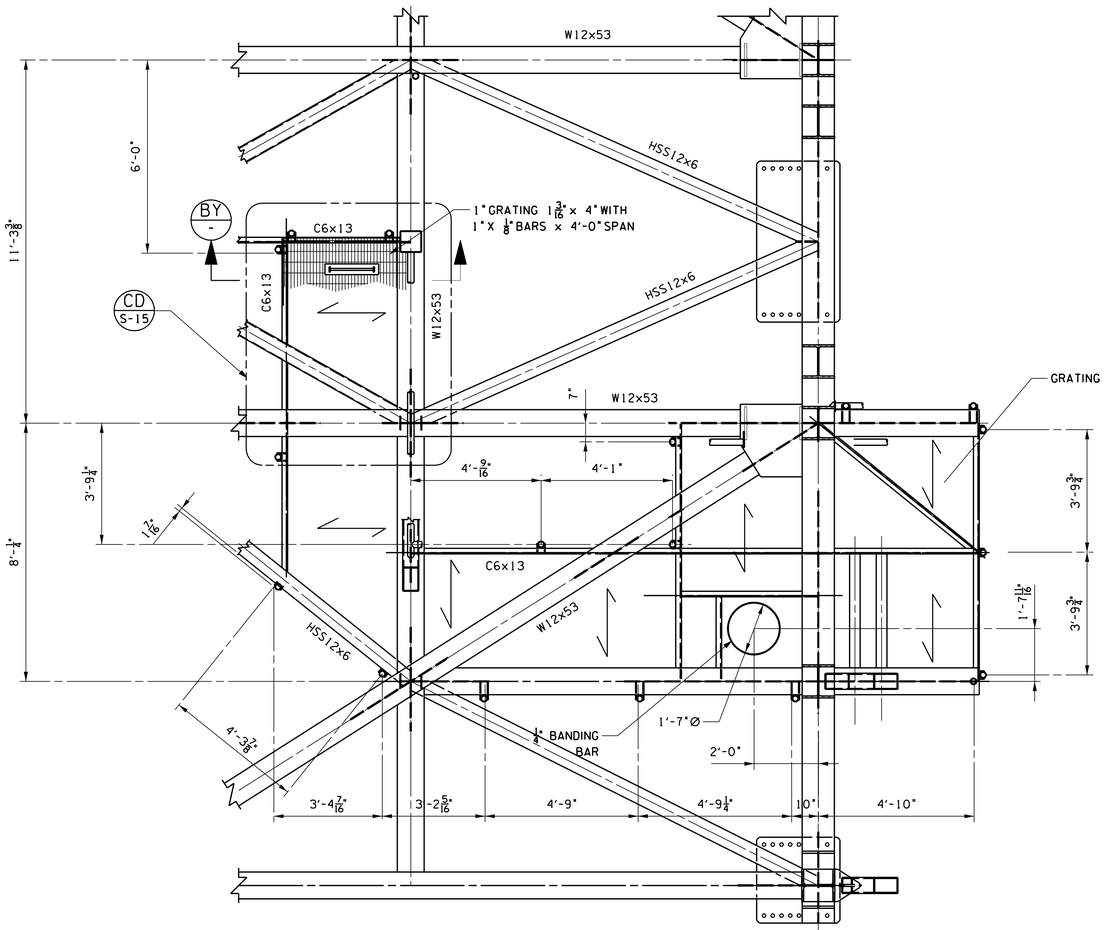

ECS CATWALK INSTL
SCALE: ½"=1'-0"

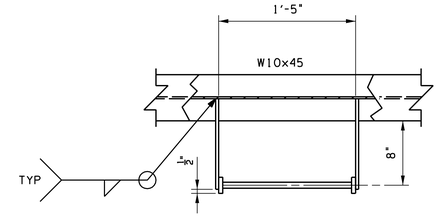

1. GRATING SHALL BE PLAIN 1"X⅛" BEARING BARS AT 1 3/16" O.C. WITH CROSS BARS AT 4" O.C. (GALV). A MAXIMUM GAP OF ¼" ALLOWED BETWEEN GRATING SECTIONS. McNICHOLS CLW-100A OR EQUAL.
2. GRATING TO BE WELDED TO FRAMING WITH ⅛ FILLET WELD X 1" LONG EACH SIDE OF EVERY FOURTH BEARING BAR.

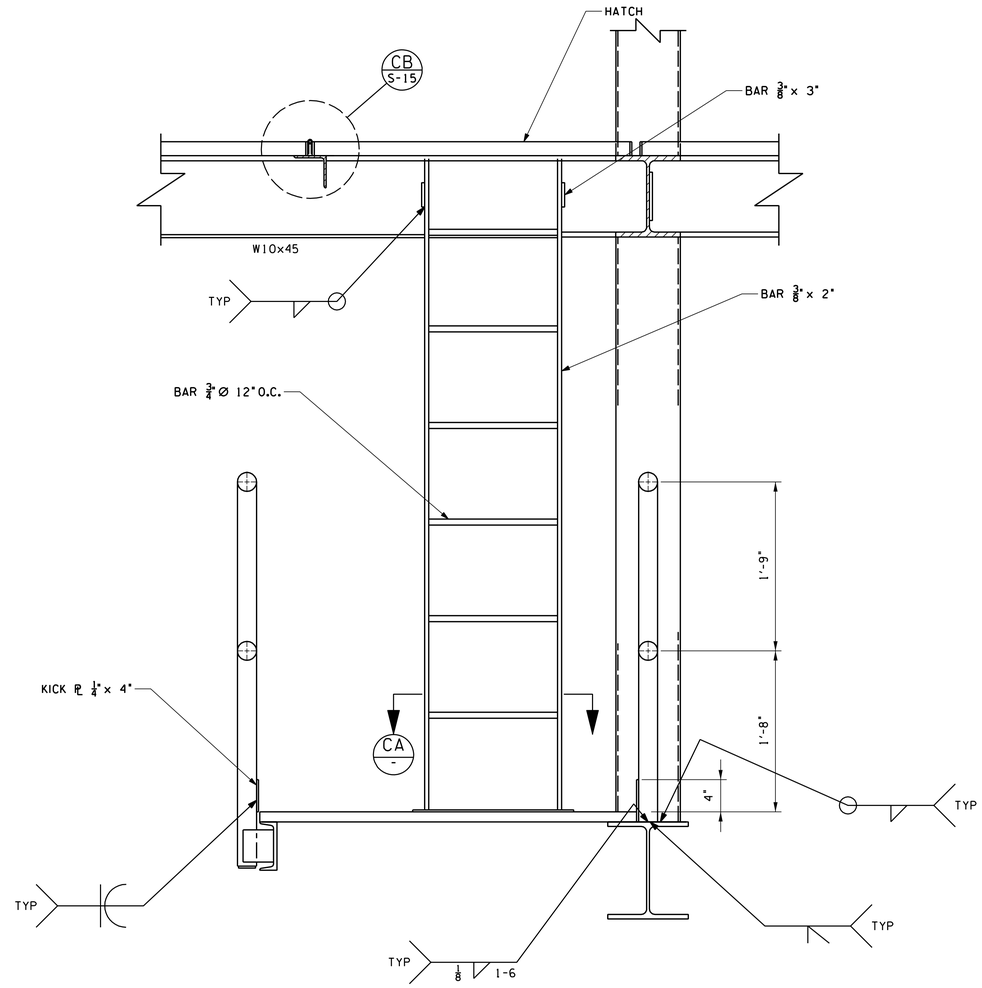

LADDER INSTALLATION BY
SCALE: 1½"=1'-0"

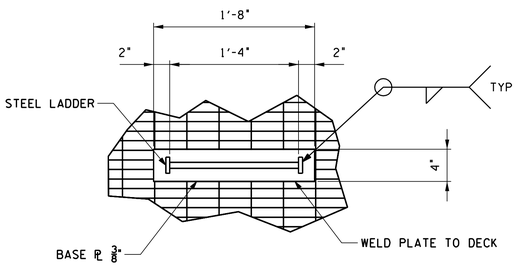

SECTION CA
SCALE: 1½"=1'-0"

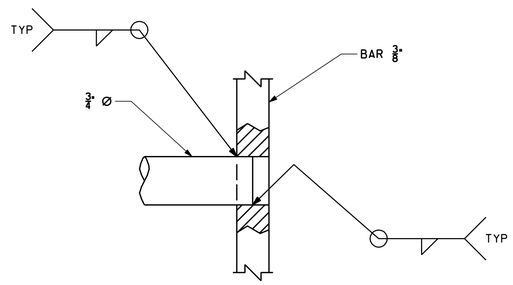

TYP RUNG INSTALL
SCALE: FULL

THIS COMPUTER DRAWING WAS CREATED IN MICROSTATION AND FILED UNDER THE DRAWING NUMBER S-14

SYM	ZONE	DESCRIPTION	DATE	APPROVAL
		REVISIONS		

SIGNATURES		DATE
DRAFTER	W. MCINTOSH	2008/09/19
CHECKER	G. NEELY	2008/09/19
ENGINEER	Z. JAKSETIC	2008/09/19
SUBMITTED		
APPROVED	S. KUGELMANN	2008/09/19
TITLE	USA 15145 MGR 1	

NATIONAL AERONAUTICS AND SPACE ADMINISTRATION
JOHN F. KENNEDY SPACE CENTER, NASA
KENNEDY SPACE CENTER, FLORIDA

LAUNCH COMPLEX 39
PAD-B
ARES I-X
VEHICLE STABILIZATION SYSTEM
PORCH ASSEMBLY (FABRICATION)
ECS CATWALK INSTALLATION

SIZE F | DWG. NO. 95K01168 | REV
PROJ. NO. | SHEET 15 OF

KSC FORM 1-11 (REV. 3/16) (CID 3/93)

NOTICE = WHEN GOVERNMENT DRAWINGS, SPECIFICATIONS, OR OTHER DATA ARE USED FOR ANY PURPOSE OTHER THAN IN CONNECTION WITH A DEFINITELY RELATED GOVERNMENT PROCUREMENT OPERATION, THE UNITED STATES GOVERNMENT THEREBY INCURS NO RESPONSIBILITY NOR ANY OBLIGATION WHATSOEVER; AND THE FACT THAT THE GOVERNMENT MAY HAVE FORMULATED, FURNISHED, OR IN ANY WAY SUPPLIED THE SAID DRAWINGS, SPECIFICATIONS OR ANY OTHER DATA IS NOT TO BE REGARDED BY IMPLICATION OR OTHERWISE IN ANY MANNER LICENSING THE HOLDER OR ANY OTHER PERSON OR CORPORATION, OR CONVEYING ANY RIGHTS OR PERMISSION TO MANUFACTURE, USE, OR SELL ANY PATENTED INVENTION THAT IN ANY WAY BE RELATED THERETO.

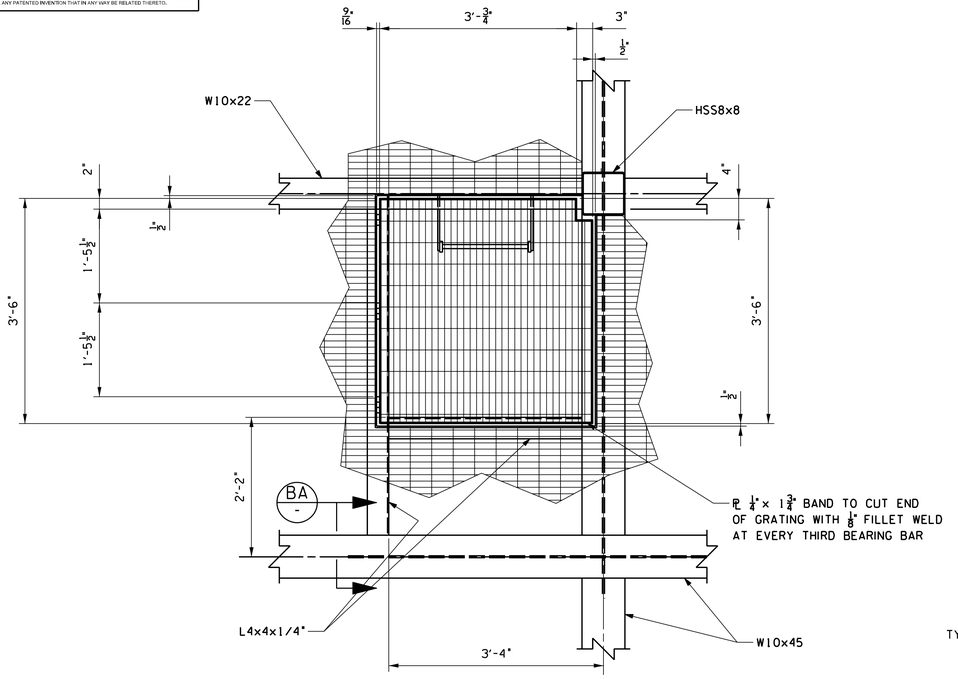

ECS CATWALK HATCH INSTALLATION (CD / S-14)
SCALE: 1"=1'-0"

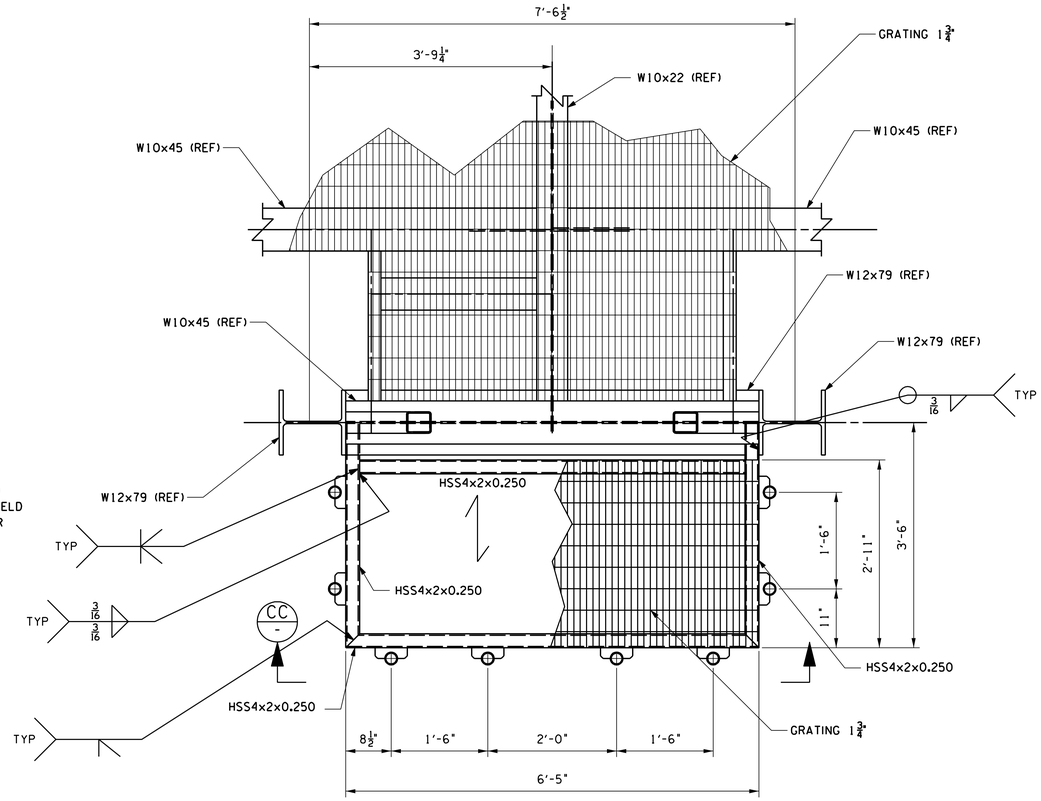

DETAIL (CP / S-3)
SCALE: 1" = 1'-0"

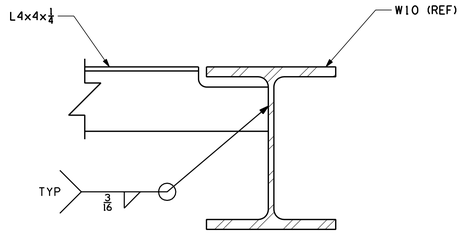

SECTION (BA / -)
SCALE: 3"=1'-0"

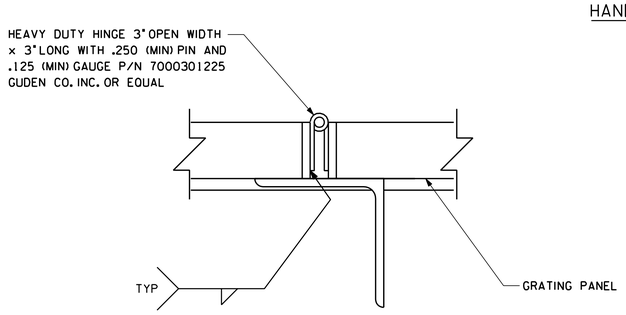

DETAIL (CB / S-14)
SCALE: 6"=1'-0"

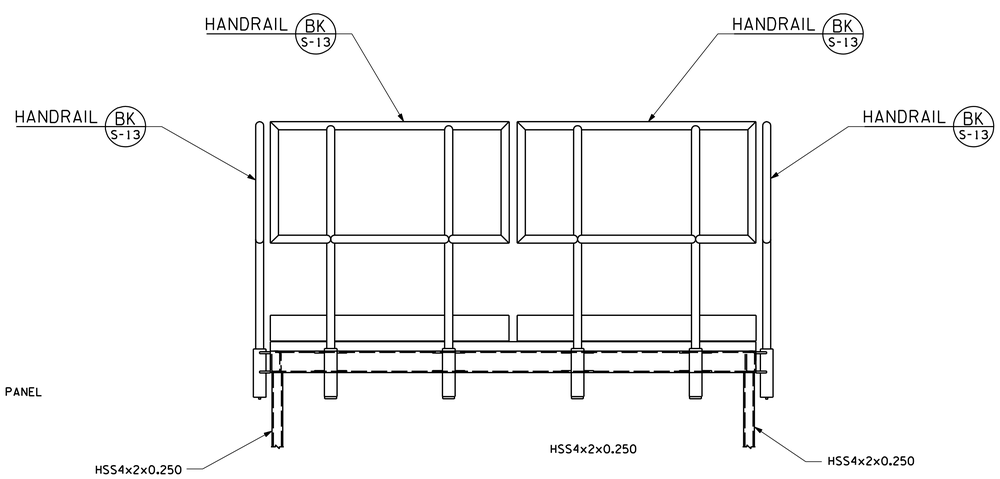

VIEW (CC / -)
SCALE: 1"=1'-0"

THIS COMPUTER DRAWING WAS CREATED IN MICROSTATION AND FILED UNDER THE DRAWING NUMBER S-15

SYM	ZONE	DESCRIPTION	DATE	APPROVAL
		REVISIONS		

SIGNATURES		DATE
DRAFTER	W. MCINTOSH	2008/09/19
CHECKER	G. NEELY	2008/09/19
ENGINEER	Z. JAKSETIC	2008/09/19
SUBMITTED		
APPROVED	S. KUGELMANN	DATE 2008/09/19
TITLE	USA 15145 MGR 1	

NATIONAL AERONAUTICS AND SPACE ADMINISTRATION
JOHN F. KENNEDY SPACE CENTER, NASA
KENNEDY SPACE CENTER, FLORIDA

LAUNCH COMPLEX 39
PAD-B
ARES I-X
VEHICLE STABILIZATION SYSTEM
PORCH ASSEMBLY (FABRICATION)
ECS CATWALK HATCH

SIZE F | DWG. NO. 95K01168 | REV
PROJ. NO. | SHEET 16 OF

KSC FORM 1-11 (REV. 3/76) (C/G 3/93)

NOTICE-WHEN GOVERNMENT DRAWINGS, SPECIFICATIONS, OR OTHER DATA ARE USED FOR ANY PURPOSE OTHER THAN IN CONNECTION WITH A DEFINITELY RELATED GOVERNMENT PROCUREMENT OPERATION, THE UNITED STATES GOVERNMENT THEREBY INCURS NO RESPONSIBILITY NOR ANY OBLIGATION WHATSOEVER; AND THE FACT THAT THE GOVERNMENT MAY HAVE FORMULATED, FURNISHED, OR IN ANY WAY SUPPLIED THE SAID DRAWINGS, SPECIFICATIONS OR ANY OTHER DATA IS NOT TO BE REGARDED BY IMPLICATION OR OTHERWISE IN ANY MANNER LICENSING THE HOLDER OR ANY OTHER PERSONS OR CORPORATION, OR CONVEYING ANY RIGHTS OR PERMISSION TO MANUFACTURE, USE, OR SELL ANY PATENTED INVENTION THAT IN ANY WAY BE RELATED THERETO.

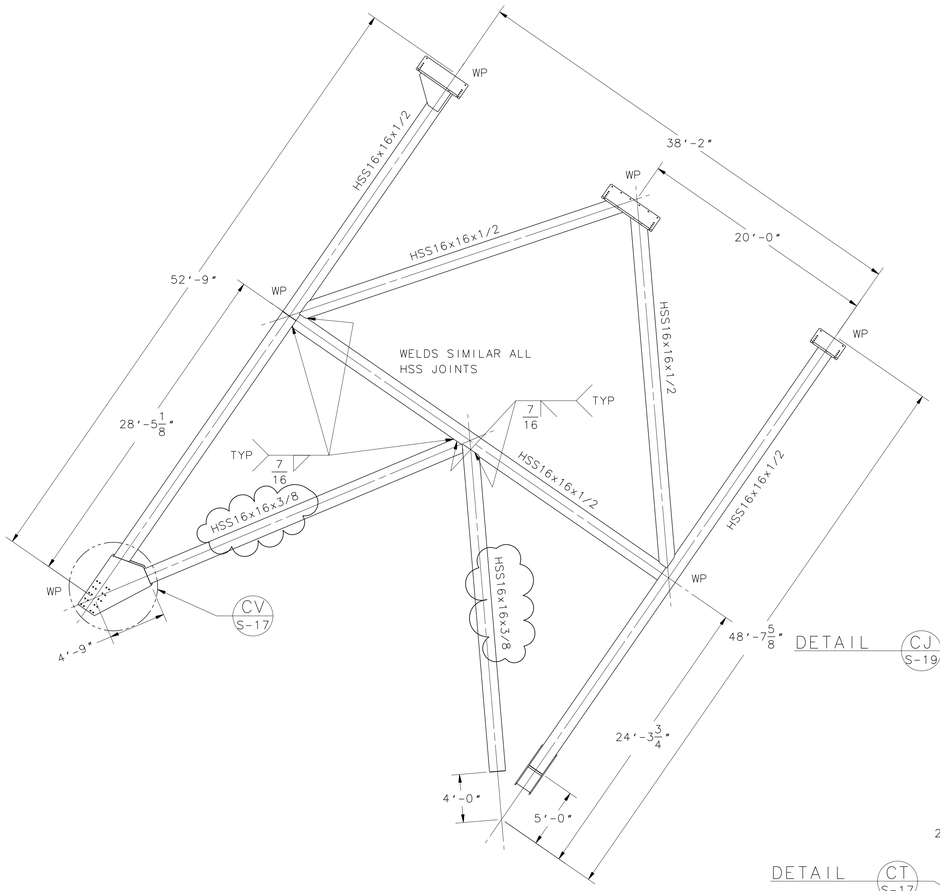

SECTION CE
SCALE:3/16=1'-0"

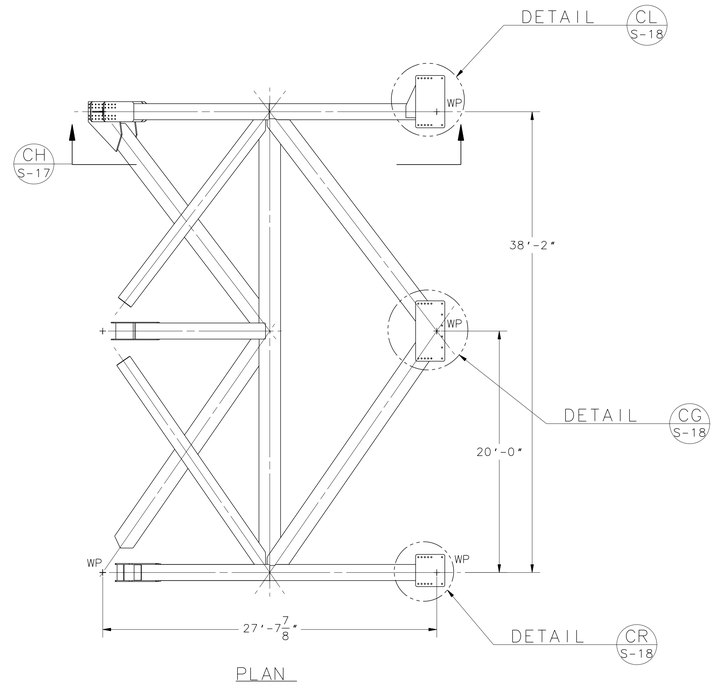

PLAN
SCALE:3/16=1'-0"

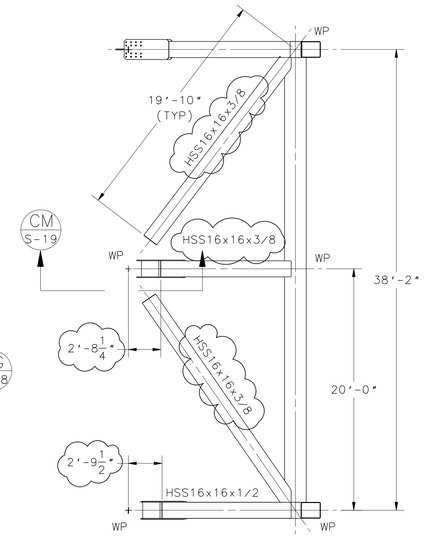

SECTION CF
SCALE:3/16=1'-0"

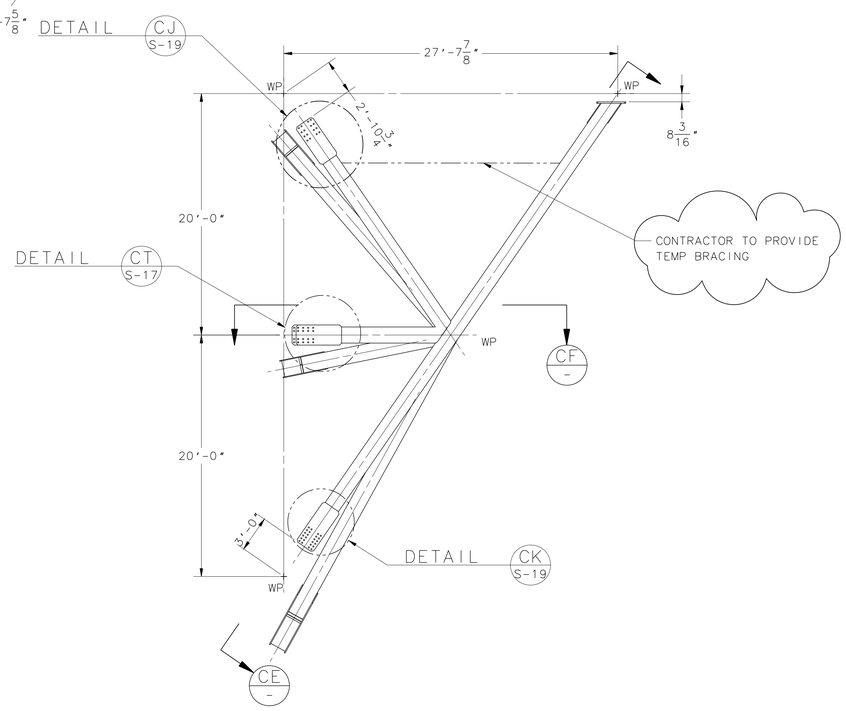

SUPPORT LEG ELEVATION
SCALE:3/16=1'-0"

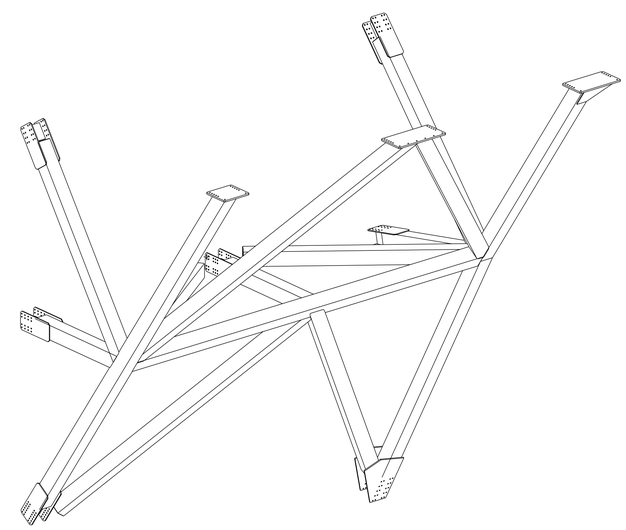

ISOMETRIC VIEW
SCALE:3/16=1'-0"

SYM	ZONE	DESCRIPTION	DATE	APPROVAL
A		THIS SH REVISED & REDRAWN DESIGN CHANGES CLOUDED ADDITIONAL INFORMATION ADDED AND RELOCATED FOR CLARITY SECTION 'CF': REVISED TEMP BRACING NOTE 2'-8 1/4" WAS 2'-8" 2'-9 1/2" WAS 3'-0" HSS16 X 16 X 3/8 WAS 1/2	2008/11/04	S KUGELMANN

REVISIONS

SIGNATURES		DATE
DRAFTER	I. GILMORE	2008/04/04
CHECKER	G. HOPKINS	2008/04/04
ENGINEER	R. WEBBER	2008/04/04
SUBMITTED	G HOPKINS	
APPROVED	S. KUGELMANN	DATE 2008/04/04
TITLE	MANAGER USA 15145	

NATIONAL AERONAUTICS AND SPACE ADMINISTRATION
JOHN F. KENNEDY SPACE CENTER, NASA
KENNEDY SPACE CENTER, FLORIDA

LAUNCH COMPLEX 39
PAD B
ARES I-X
VEHICLE STABILIZATION SYSTEM
PORCH ASSEMBLY (FABRICATION)
SUPPORT LEG

SIZE F | DWG NO. 95K01168 | REV A
PROJ. NO. | SHEET 17 OF

TC# 054056

THIS COMPUTER DRAWING WAS CREATED IN NX AND FILED UNDER THE DRAWING NUMBER S-16

KSC FORM 21-9(REV 7/87)(C/G 3/93)

NOTICE-WHEN GOVERNMENT DRAWINGS, SPECIFICATIONS, OR OTHER DATA ARE USED FOR ANY PURPOSE OTHER THAN IN CONNECTION WITH A DEFINITELY RELATED GOVERNMENT PROCUREMENT OPERATION, THE UNITED STATES GOVERNMENT THEREBY INCURS NO RESPONSIBILITY NOR ANY OBLIGATION WHATSOEVER; AND THE FACT THAT THE GOVERNMENT MAY HAVE FORMULATED, FURNISHED, OR IN ANY WAY SUPPLIED THE SAID DRAWINGS, SPECIFICATIONS OR ANY OTHER DATA IS NOT TO BE REGARDED BY IMPLICATION OR OTHERWISE IN ANY MANNER LICENSING THE HOLDER OR ANY OTHER PERSONS OR CORPORATION, OR CONVEYING ANY RIGHTS OR PERMISSION TO MANUFACTURE, USE, OR SELL ANY PATENTED INVENTION THAT IN ANY WAY BE RELATED THERETO.

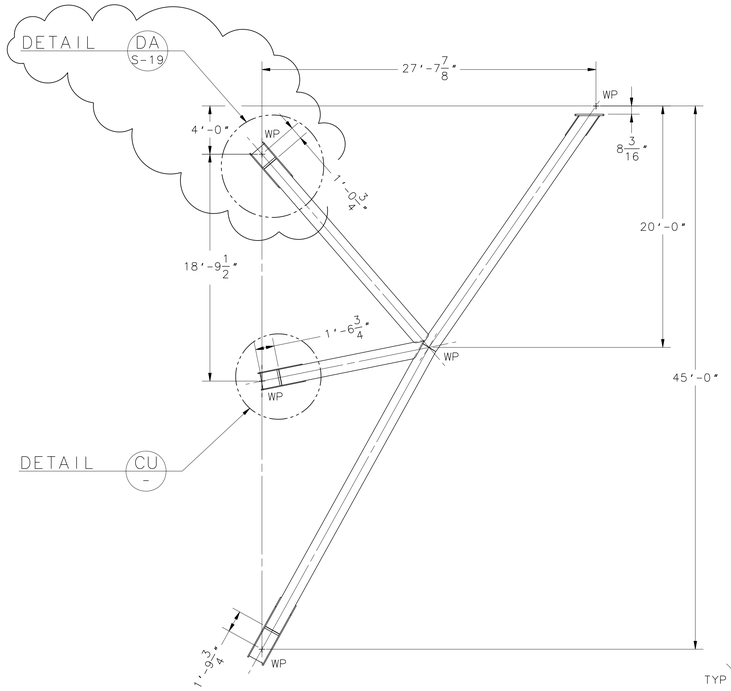

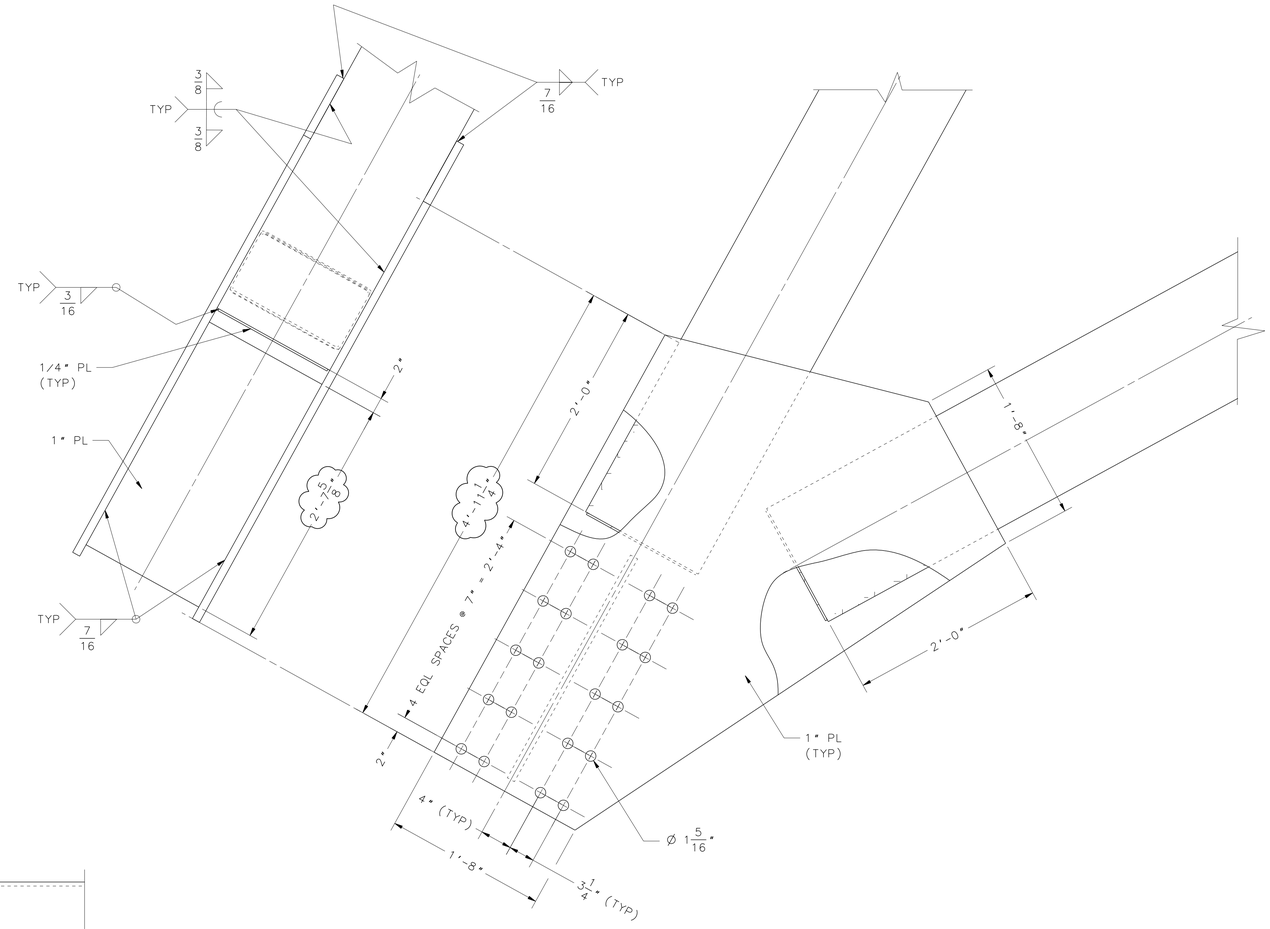

DETAIL CV S-16
SCALE: 1/8

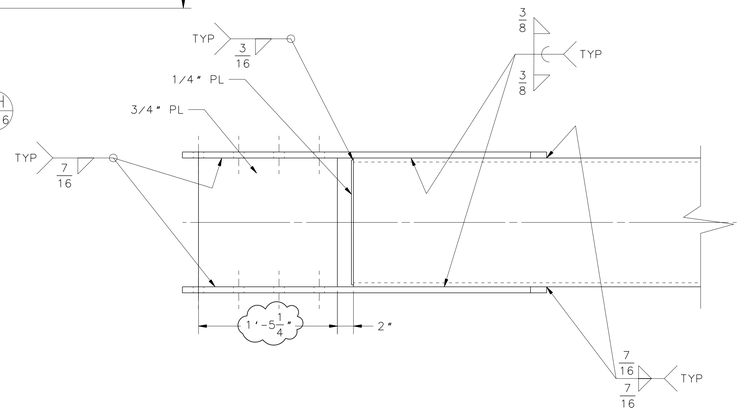

DETAIL CH S-16
SCALE: 3/16=1'-0"

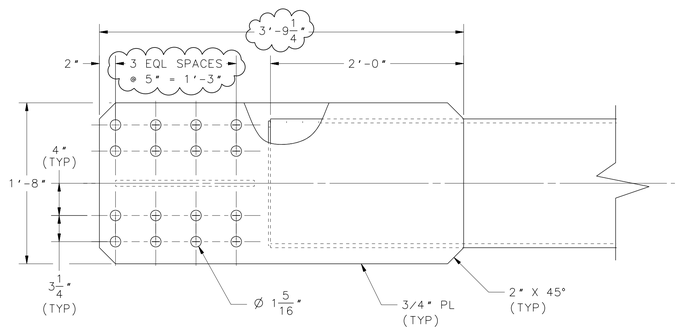

DETAIL CT S-16 (SHOWN)
SCALE: 1/8

DETAIL CU - (SIMILAR)
SCALE: 1/8

TC# 054056

THIS COMPUTER DRAWING WAS CREATED IN NX AND FILED UNDER THE DRAWING NUMBER S-17

SYM	ZONE	DESCRIPTION	DATE	APPROVAL
A		THIS SH REVISED & REDRAWN DESIGN CHANGES CLOUDED ADDITIONAL INFORMATION ADDED AND RELOCATED FOR CLARITY ADDED CALLOUT FOR DETAIL 'DA'. DETAIL 'CT' & 'CU': 1'-5 1/4" WAS 1'-8" 5" HOLE SPACING WAS 6 5/8" 3'-9 1/4" WAS 4'-0 3/4" DETAIL 'CV': 2'-7 5/8" WAS 2'-0" 4'-11 1/4" WAS 4'-0"	2008/11/04	S KUGELMANN

REVISIONS

SIGNATURES		DATE
DRAFTER	I. GILMORE	2008/04/04
CHECKER	G. HOPKINS	2008/04/04
ENGINEER	R. WEBBER	2008/04/04
SUBMITTED	G HOPKINS	
APPROVED	S. KUGELMANN	DATE 2008/04/04
TITLE	MANAGER	USA 15145

NATIONAL AERONAUTICS AND SPACE ADMINISTRATION
JOHN F. KENNEDY SPACE CENTER, NASA
KENNEDY SPACE CENTER, FLORIDA

LAUNCH COMPLEX 39
PAD B
ARES I-X
VEHICLE STABILIZATION SYSTEM
PORCH ASSEMBLY(FABRICATION)
SUPPORT LEG DETAILS

SIZE F | DWG NO. 95K01168 | REV A
PROJ. NO.
SHEET 18 OF

KSC FORM 21-9(REV 7/87)(C/G 3/93)

CAD LOCKED

NOTICE-WHEN GOVERNMENT DRAWINGS, SPECIFICATIONS, OR OTHER DATA ARE USED FOR ANY PURPOSE OTHER THAN IN CONNECTION WITH A DEFINITELY RELATED GOVERNMENT PROCUREMENT OPERATION, THE UNITED STATES GOVERNMENT THEREBY INCURS NO RESPONSIBILITY NOR ANY OBLIGATION WHATSOEVER; AND THE FACT THAT THE GOVERNMENT MAY HAVE FORMULATED, FURNISHED, OR IN ANY WAY SUPPLIED THE SAID DRAWINGS, SPECIFICATIONS OR ANY OTHER DATA IS NOT TO BE REGARDED BY IMPLICATION OR OTHERWISE IN ANY MANNER LICENSING THE HOLDER OR ANY OTHER PERSONS OR CORPORATION, OR CONVEYING ANY RIGHTS OR PERMISSION TO MANUFACTURE, USE, OR SELL ANY PATENTED INVENTION THAT IN ANY WAY BE RELATED THERETO.

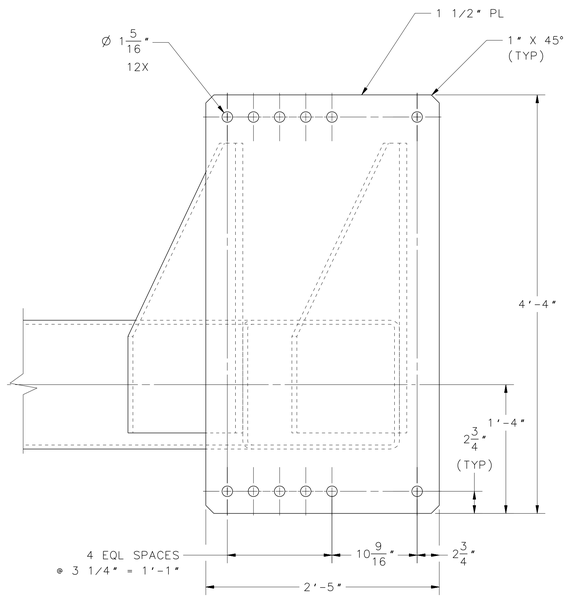

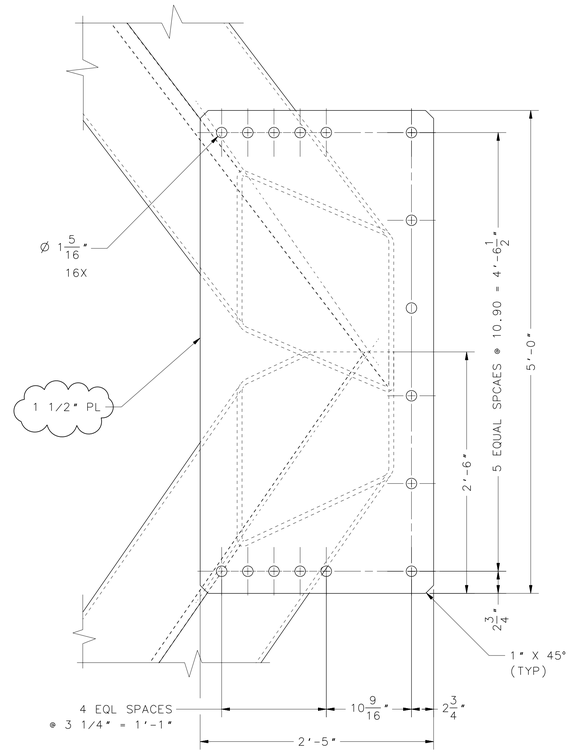

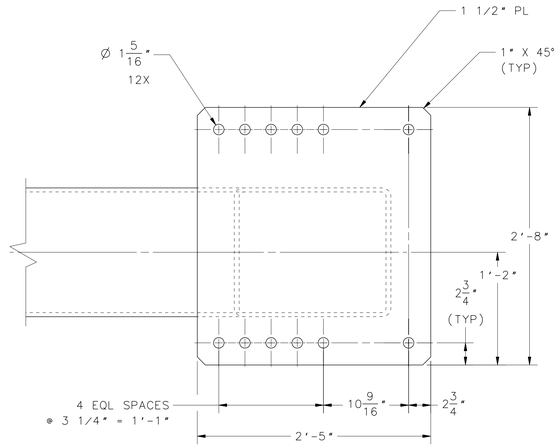

DETAIL CR
SCALE: 1/8 S-16

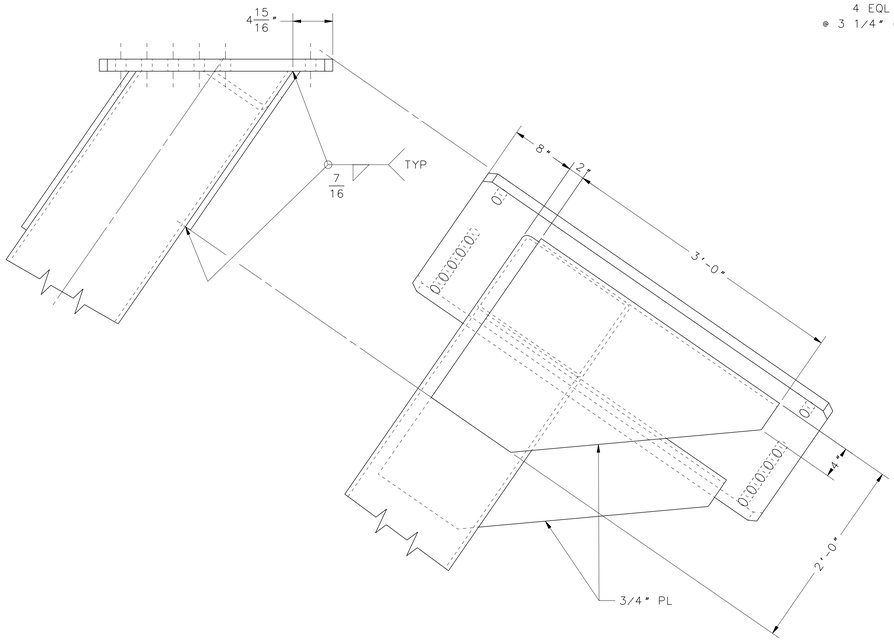

DETAIL CL
SCALE: 1/8 S-16

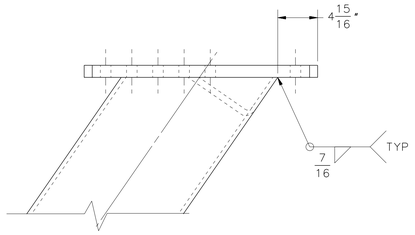

DETAIL CG
SCALE: 1/8 S-16

SYM	ZONE	DESCRIPTION	DATE	APPROVAL
A		THIS SH REVISED & REDRAWN DESIGN CHANGES CLOUDED ADDITIONAL INFORMATION ADDED AND RELOCATED FOR CLARITY DETAIL 'CG': 1 1/2" WAS 1 1/4" 7 1/2" WAS 6 1/2"	2008/11/04	S KUGELMANN

REVISIONS

SIGNATURES		DATE
DRAFTER	I. GILMORE	2008/04/04
CHECKER	G. HOPKINS	2008/04/04
ENGINEER	R. WEBBER	2008/04/04
SUBMITTED	G HOPKINS	
APPROVED	S. KUGELMANN	2008/04/04
TITLE	MANAGER USA 15145	

NATIONAL AERONAUTICS AND SPACE ADMINISTRATION
JOHN F. KENNEDY SPACE CENTER, NASA
KENNEDY SPACE CENTER, FLORIDA

LAUNCH COMPLEX 39
PAD B
ARES I-X
VEHICLE STABILIZATION SYSTEM
PORCH ASSEMBLY (FABRICATION)
SUPPORT LEG DETAILS

SIZE F | DWG NO. 95K01168 | REV A
PROJ. NO. | SHEET 19 OF

TC# 054056

THIS COMPUTER DRAWING WAS
CREATED IN NX AND
FILED UNDER THE DRAWING NUMBER S-18

KSC FORM 21-9(REV 7/87)(C/G 3/93)

CAD LOCKED

NOTICE-WHEN GOVERNMENT DRAWINGS, SPECIFICATIONS, OR OTHER DATA ARE USED FOR ANY PURPOSE OTHER THAN IN CONNECTION WITH A DEFINITELY RELATED GOVERNMENT PROCUREMENT OPERATION, THE UNITED STATES GOVERNMENT THEREBY INCURS NO RESPONSIBILITY NOR ANY OBLIGATION WHATSOEVER; AND THE FACT THAT THE GOVERNMENT MAY HAVE FORMULATED, FURNISHED, OR IN ANY WAY SUPPLIED THE SAID DRAWINGS, SPECIFICATIONS OR ANY OTHER DATA IS NOT TO BE REGARDED BY IMPLICATION OR OTHERWISE IN ANY MANNER LICENSING THE HOLDER OR ANY OTHER PERSONS OR CORPORATION, OR CONVEYING ANY RIGHTS OR PERMISSION TO MANUFACTURE, USE, OR SELL ANY PATENTED INVENTION THAT IN ANY WAY BE RELATED THERETO.

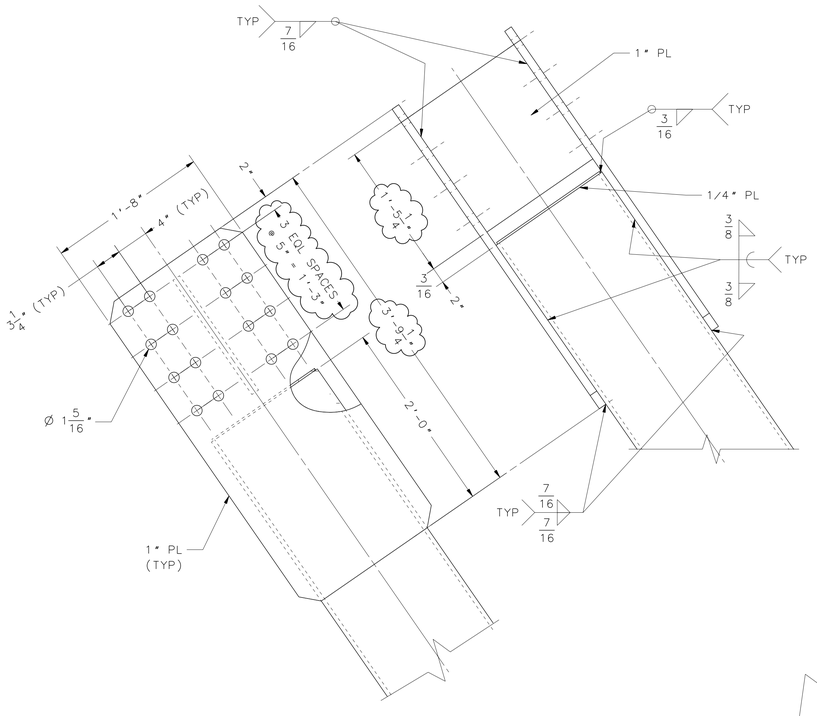

DETAIL CJ (SHOWN)
SCALE: 1/8 S-16

DETAIL DA (SIMILAR)
SCALE: 1/8 S-17

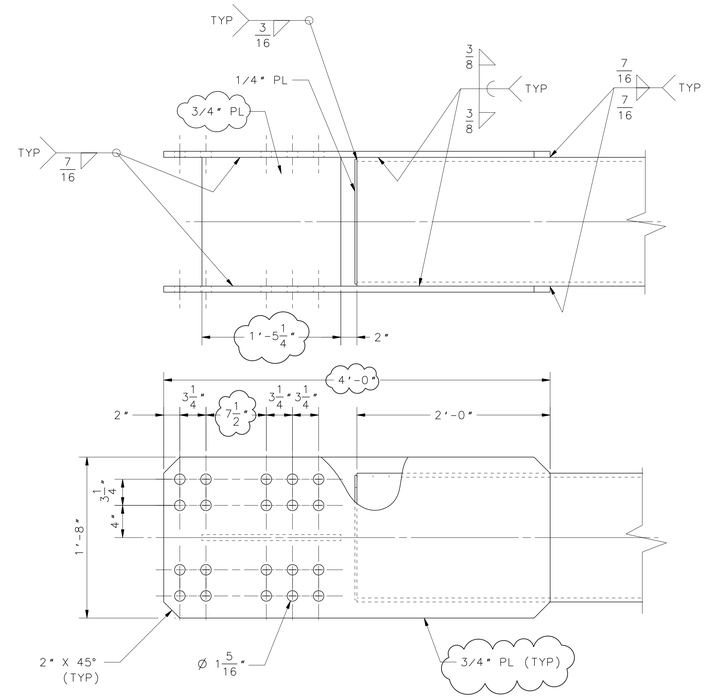

DETAIL CM
SCALE: 1/8 S-16

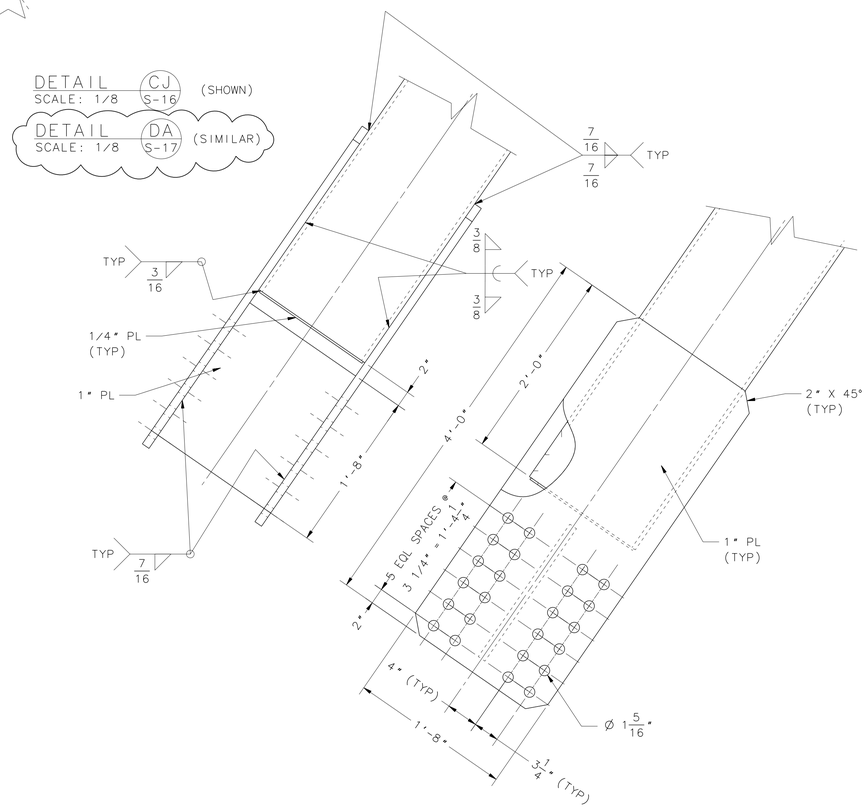

DETAIL CK
SCALE: 1/8 S-16

TC# 054056

THIS COMPUTER DRAWING WAS CREATED IN NX AND FILED UNDER THE DRAWING NUMBER S-19

SYM	ZONE	DESCRIPTION	DATE	APPROVAL
A		THIS SH REVISED & REDRAWN DESIGN CHANGES CLOUDED ADDITIONAL INFORMATION ADDED AND RELOCATED FOR CLARITY ADDED DETAIL 'DA'. DETAIL 'CJ': 1'-5 1/4" WAS 1'-8" 5" HOLE SPACING WAS 6 5/8" 3'-9 1/4" WAS 4'-0 3/4" DETAIL 'CM': 3/4 PL WAS 1" PL 4'-0" WAS 4'-0 3/4" 7 1/2" WAS 6 1/2"	2008/11/04	S KUGELMANN

REVISIONS

SIGNATURES		DATE
DRAFTER	I. GILMORE	2008/04/04
CHECKER	G. HOPKINS	2008/04/04
ENGINEER	R. WEBBER	2008/04/04
SUBMITTED	G HOPKINS	
APPROVED	S. KUGELMANN	DATE 2008/04/04
TITLE	MANAGER USA 15145	

NATIONAL AERONAUTICS AND SPACE ADMINISTRATION
JOHN F. KENNEDY SPACE CENTER, NASA
KENNEDY SPACE CENTER, FLORIDA

LAUNCH COMPLEX 39
PAD B
ARES I-X
VEHICLE STABILIZATION SYSTEM
PORCH ASSEMBLY (FABRICATION)
SUPPORT LEG DETAILS

SIZE F | DWG NO. 95K01168 | REV A
PROJ. NO. | SHEET 20 OF

KSC FORM 21-9(REV 7/87)(C/G 3/93)

CAD LOCKED

NOTICE – WHEN GOVERNMENTDRAWINGS, SPECIFICATIONS, OR OTHERDATA ARE USED FOR ANY PURPOSE OTHER THAN IN CONNECTION WITH ADIRNITELY RELATED GOVERNMENT PROCUREMENT OPERATION, THE UNITED STATES GOVERNMENT THEREBY INCURRS NO RESPONSIBILITY NOR ANY OBLIGATION WHATSOEVER; AND THE FACT THAT THE GOVERNMENT MAY HAVE FORMULATED, FURNISHED, OR IN ANY WAY SUPPLIED THE SAID DRAWINGS, SPECIFICATIONS OR ANY OTHERDATA IS NOT TO BE REGARDED BY IMPLICATION OR OTHERWISE IN ANY MANNER LICENSING THE HOLDER OR ANY OTHER PERSONS OR CORPORATION OR CONVEYING ANY RIGHTS OR PERMISSION TO MANUFACTURE, USE, OR SELL ANY PATENTED INVENTION THAT IN ANY WAY BE RELATED THERETO.

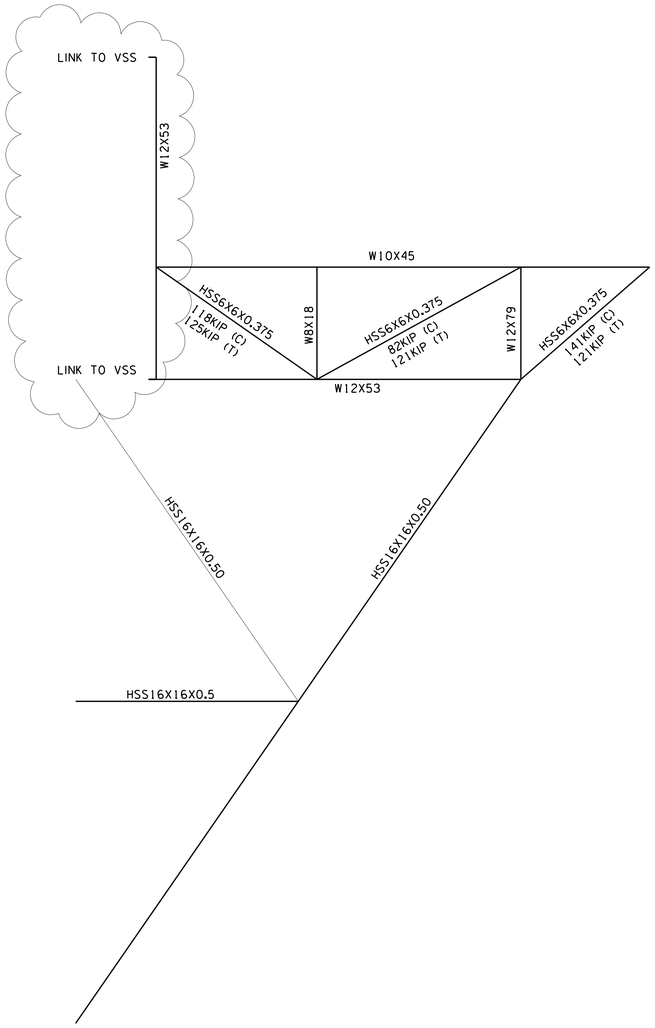

NORTH/SOUTH ELEVATIONS
SCALE: NTS

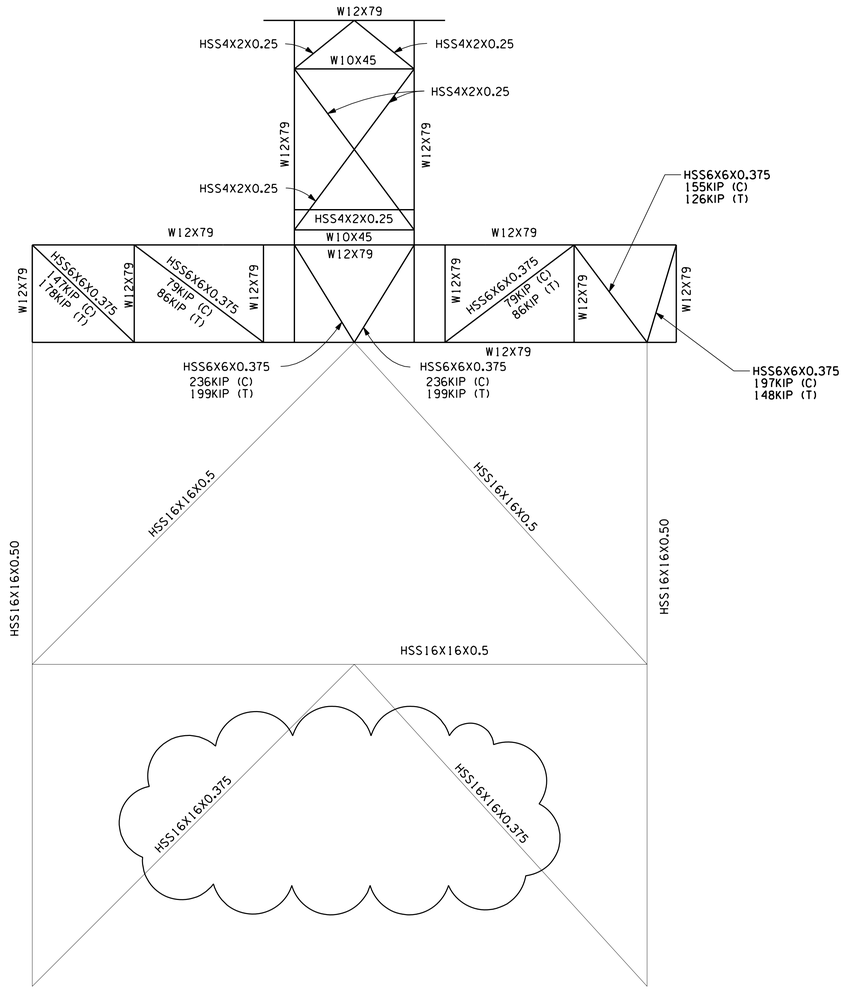

FRONT/WEST ELEVATION
SCALE: NTS

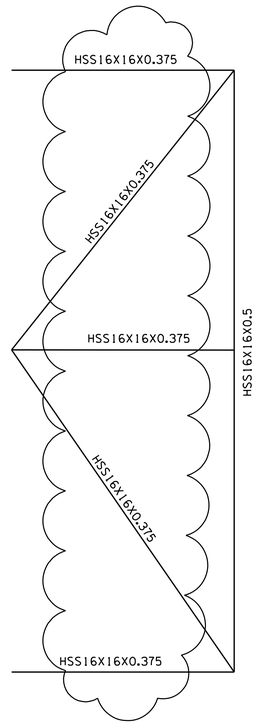

PLAN - 220' LEVEL
SCALE: NTS

THIS COMPUTERRAWING WAS CREATED IN MICROSTATION AND FILED UNDER THERAWING NUMBER S-20

SYM	ZONE	DESCRIPTION	DATE	APPROVAL
A		CORRECTED MEMBER SIZES UPDATED ALL LOADS	2008/11/04	S. KUGELMANN

REVISIONS

SIGNATURES		DATE
DRAFTER	W. MCINTOSH	2008/09/19
CHECKER	G. NEELY	2008/09/19
ENGINEER	Z. JAKSETIC	2008/09/19
SUBMITTED		
APPROVED	S. KUGELMANN	2008/09/19
TITLE	USA 15145 MGR 1	

NATIONAL AERONAUTICS AND SPACE ADMINISTRATION
JOHN F. KENNEDY SPACE CENTER, NASA
KENNEDY SPACE CENTER, FLORIDA

LAUNCH COMPLEX 39
PAD-B
ARES I-X
VEHICLE STABILIZATION SYSTEM
PORCH ASSEMBLY (FABRICATION)
FORCE DIAGRAMS

SIZE F | DWG. NO. 95K01168 | REV A
PROJ. NO. | SHEET 21 OF

KSC FORM 1-11 (REV. 3/76) (CIG 3/93)

NOTICE – WHEN GOVERNMENT DRAWINGS, SPECIFICATIONS, OR OTHER DATA ARE USED FOR ANY PURPOSE OTHER THAN IN CONNECTION WITH A DEFINITELY RELATED GOVERNMENT PROCUREMENT OPERATION, THE UNITED STATES GOVERNMENT THEREBY INCURS NO RESPONSIBILITY NOR ANY OBLIGATION WHATSOEVER; AND THE FACT THAT THE GOVERNMENT MAY HAVE FORMULATED, FURNISHED, OR IN ANY WAY SUPPLIED THE SAID DRAWINGS, SPECIFICATIONS, OR ANY OTHER DATA IS NOT TO BE REGARDED BY IMPLICATION, OR OTHERWISE IN ANY MANNER LICENSING THE HOLDER OR ANY OTHER PERSONS OR CORPORATION, OR CONVEYING ANY RIGHTS OR PERMISSION TO MANUFACTURE, USE, OR SELL ANY PATENTED INVENTION THAT IN ANY WAY BE RELATED THERETO.

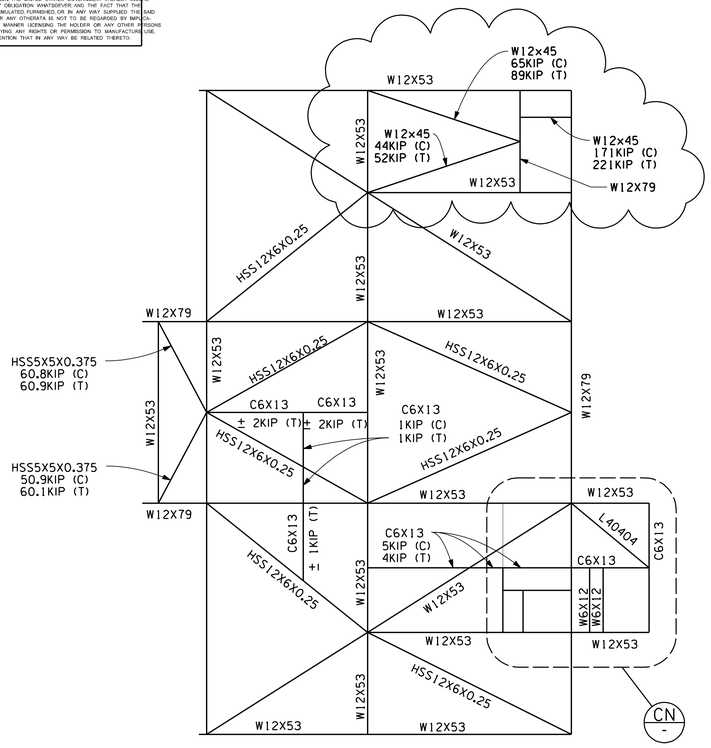

PLAN - 240' LEVEL

SCALE: NTS

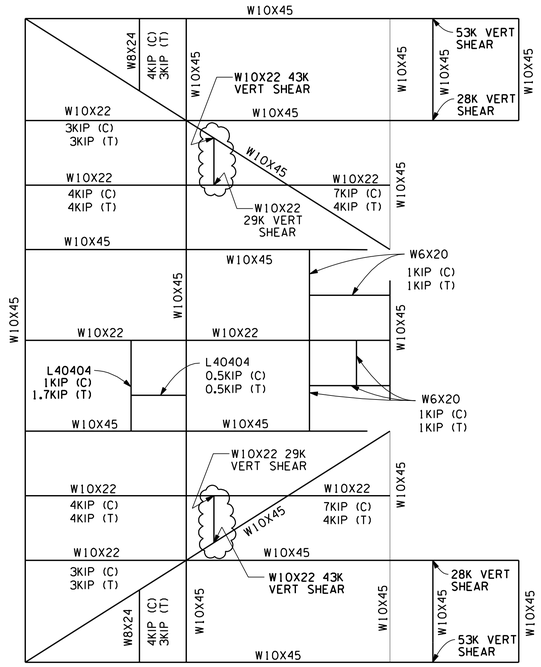

PLAN - 246'-11" LEVEL

SCALE: NTS

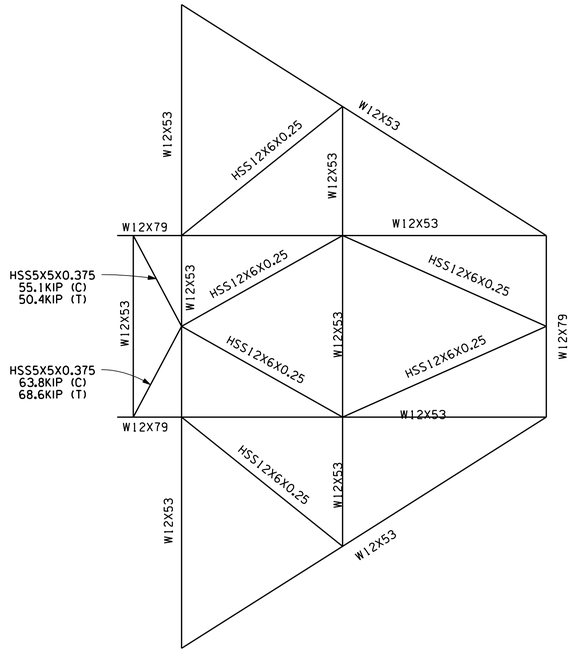

PLAN - 260' LEVEL

SCALE: NTS

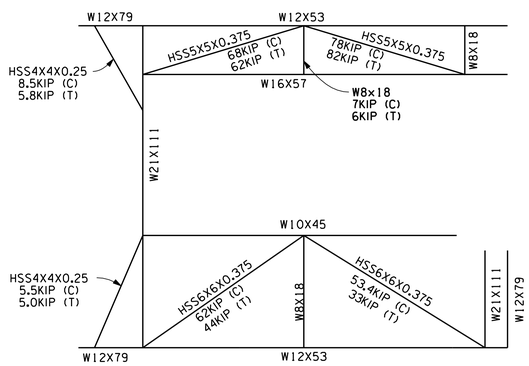

NORTH/SOUTH INTERIOR ELEVATIONS

SCALE: NTS

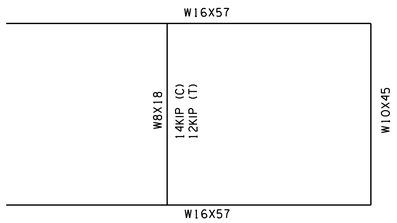

PLAN - 256' LEVEL

SCALE: NTS

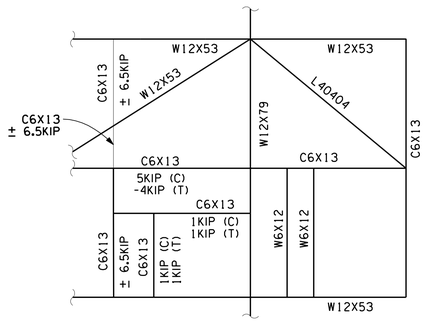

DETAIL CN

SCALE: NTS

SYM	ZONE	DESCRIPTION	DATE	APPROVAL
A		INCORPORATED REDLINE CHANGES UPDATED ALL LOADS	2008/11/04	S. KUGELMANN

REVISIONS

SIGNATURES		DATE
DRAFTER	W. MCINTOSH	2008/09/19
CHECKER	G. NEELY	2008/09/19
ENGINEER	Z. JAKSETIC	2008/09/19
SUBMITTED		
APPROVED	S. KUGELMANN	2008/09/19
TITLE	USA 15145 MGR 1	

NATIONAL AERONAUTICS AND SPACE ADMINISTRATION
JOHN F. KENNEDY SPACE CENTER, NASA
KENNEDY SPACE CENTER, FLORIDA

LAUNCH COMPLEX 39
PAD-B
ARES I-X
VEHICLE STABILIZATION SYSTEM
PORCH ASSEMBLY (FABRICATION)
FORCE DIAGRAMS

SIZE F | DWG. NO. 95K01168 | REV A

PROJ. NO. | SHEET 22 OF

THIS COMPUTERRAWING WAS CREATED IN MICROSTATION AND FILED UNDER THERAWING NUMBER S-21

KSC FORM 1-11 (REV. 3/76) (CG 3/93)

VAB-E-00020

NOTICE – WHEN GOVERNMENTDRAWINGS, SPECIFICATIONS, OR OTHERDATA ARE USED FOR ANY PURPOSE OTHER THAN IN CONNECTION WITH ADEFINITELY RELATED GOVERNMENT PROCUREMENT OPERATION, THE UNITED STATES GOVERNMENT THEREBY INCURS NO RESPONSIBILITY NOR ANY OBLIGATION WHATSOEVER; AND THE FACT THAT THE GOVERNMENT MAY HAVE FORMULATED, FURNISHED, OR IN ANY WAY SUPPLIED THE SAID DRAWINGS, SPECIFICATIONS OR ANY OTHERDATA IS NOT TO BE REGARDED BY IMPLICATION OR OTHERWISE IN ANY MANNER LICENSING THE HOLDER OR ANY OTHER PERSONS OR CORPORATION OR CONVEYING ANY RIGHTS OR PERMISSION TO MANUFACTURE, USE, OR SELL ANY PATENTED INVENTION THAT IN ANY WAY BE RELATED THERETO.

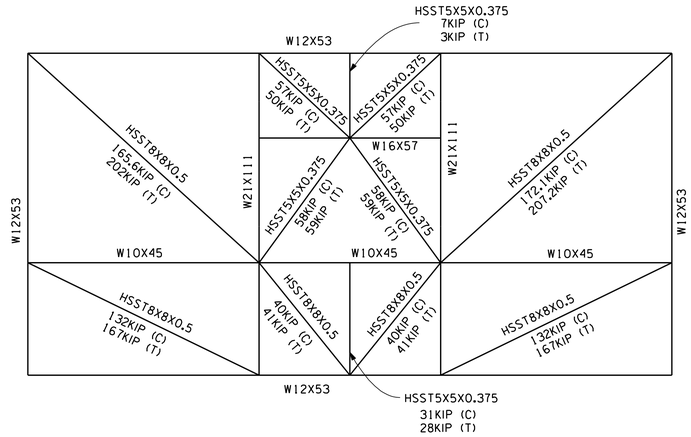

BACK WEST ELEVATION

SCALE: NTS

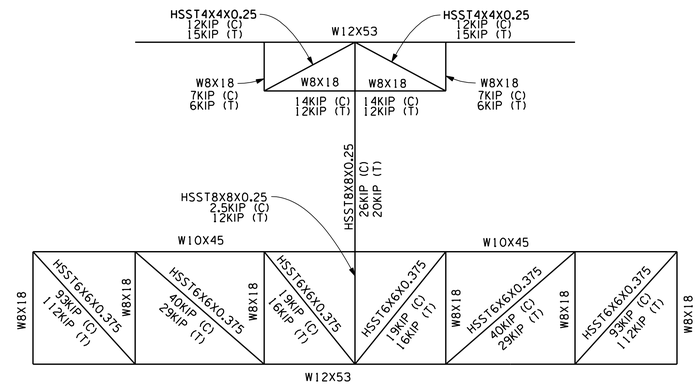

MIDDLE WEST ELEVATION

SCALE: NTS

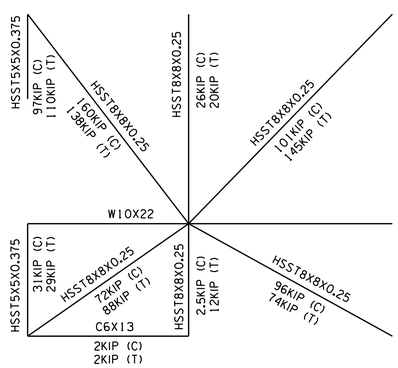

MIDDLE INTERIOR ELEVATION

SCALE: NTS

THIS COMPUTERRAWING WAS CREATED IN MICROSTATION AND FILED UNDER THERAWING NUMBER S-22

SYM	ZONE	DESCRIPTION	DATE	APPROVAL
A		UPDATED ALL LOADS	2008/11/04	S. KUGELMANN

REVISIONS

SIGNATURES		DATE
DRAFTER	W. MCINTOSH	2008/09/19
CHECKER	G. NEELY	2008/09/19
ENGINEER	Z. JAKSETIC	2008/09/19
SUBMITTED		
APPROVED	S. KUGELMANN	2008/09/19
TITLE	USA 15145 MGR 1	

NATIONAL AERONAUTICS AND SPACE ADMINISTRATION
JOHN F. KENNEDY SPACE CENTER, NASA
KENNEDY SPACE CENTER, FLORIDA

LAUNCH COMPLEX 39
PAD-B
ARES I-X
VEHICLE STABILIZATION SYSTEM
PORCH ASSEMBLY (FABRICATION)
FORCE DIAGRAMS

SIZE F | DWG. NO. 95K01168 | REV A

PROJ. NO. | SHEET 23 OF 23

KSC FORM 1-11 (REV. 3/76) (CIG 3/93)

NOTICE = WHEN GOVERNMENT DRAWINGS, SPECIFICATIONS, OR OTHER DATA ARE USED FOR ANY PURPOSE OTHER THAN IN CONNECTION WITH A DEFINITELY RELATED GOVERNMENT PROCUREMENT OPERATION, THE UNITED STATES GOVERNMENT THEREBY INCURS NO RESPONSIBILITY NOR ANY OBLIGATION WHATSOEVER; AND THE FACT THAT THE GOVERNMENT MAY HAVE FORMULATED, FURNISHED, OR IN ANY WAY SUPPLIED THE SAID DRAWINGS, SPECIFICATIONS OR ANY OTHER DATA IS NOT TO BE REGARDED BY IMPLICATION OR OTHERWISE IN ANY MANNER LICENSING THE HOLDER OR ANY OTHER PERSONS OR CORPORATION, OR CONVEYING ANY RIGHTS OR PERMISSION TO MANUFACTURE, USE, OR SELL ANY PATENTED INVENTION THAT IN ANY WAY BE RELATED THERETO.

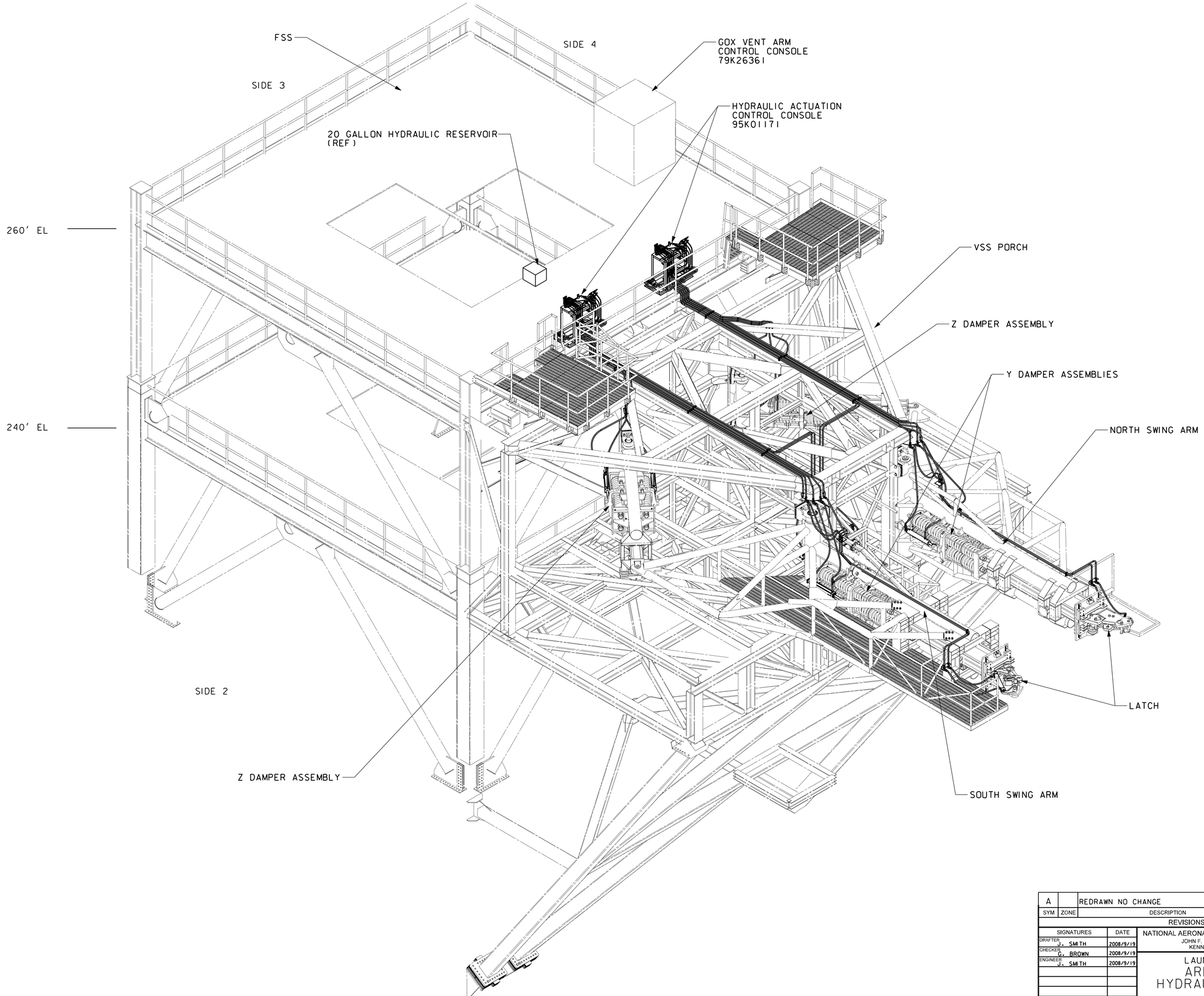

SYM	ZONE	DESCRIPTION	DATE	APPROVAL
A		REDRAWN NO CHANGE	2008/10/30	T.O. ADAMS J.S. SMITH

REVISIONS

SIGNATURES	DATE
DRAFTER J. SMITH	2008/9/19
CHECKER G. BROWN	2008/9/19
ENGINEER J. SMITH	2008/9/19
SUBMITTED	
APPROVED T.O. ADAMS	DATE 2008/9/19
TITLE MGR I USA 15121	

NATIONAL AERONAUTICS AND SPACE ADMINISTRATION
JOHN F. KENNEDY SPACE CENTER, NASA
KENNEDY SPACE CENTER, FLORIDA

LAUNCH COMPLEX 39B
ARES I-X VSS
HYDRAULIC ACTUATION
SYSTEM
ORTHOGONAL VIEW OF FSS/VSS

SIZE F | DWG. NO. 95K01170 | REV A
PROJ. NO. | SHEET 3 OF

THIS COMPUTER DRAWING WAS CREATED IN MICROSTATION AND FILED UNDER THE DRAWING NUMBER M-2

KSC FORM 1-11 (REV. 3/76) (CIG 3/93)

NOTICE-WHEN GOVERNMENT DRAWINGS, SPECIFICATIONS, OR OTHER DATA ARE USED FOR ANY PURPOSE OTHER THAN IN CONNECTION WITH A DEFINITELY RELATED GOVERNMENT PROCUREMENT OPERATION, THE UNITED STATES GOVERNMENT THEREBY INCURS NO RESPONSIBILITY NOR ANY OBLIGATION WHATSOEVER; AND THE FACT THAT THE GOVERNMENT MAY HAVE FORMULATED, FURNISHED, OR IN ANY WAY SUPPLIED THE SAID DRAWINGS, SPECIFICATIONS OR ANY OTHER DATA IS NOT TO BE REGARDED BY IMPLICATION OR OTHERWISE IN ANY MANNER LICENSING THE HOLDER OR ANY OTHER PERSON OR CORPORATION, OR CONVEYING ANY RIGHTS OR PERMISSION TO MANUFACTURE, USE, OR SELL ANY PATENTED INVENTION THAT IN ANY WAY BE RELATED THERETO.

REVISION HISTORY

PART NO.	ZONE	REV	DESCRIPTION	DATE	APPROVAL
		A	THIS SH REVISED ADDED ITEM 62	2008/11/14	S KUGELMANN

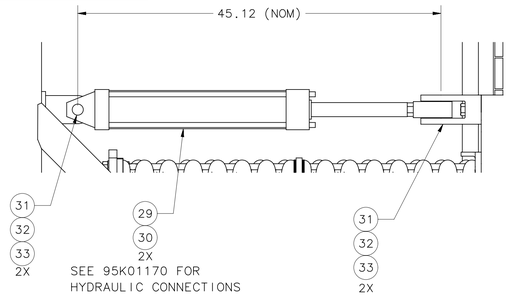

DETAIL E
SCALE: 1/8

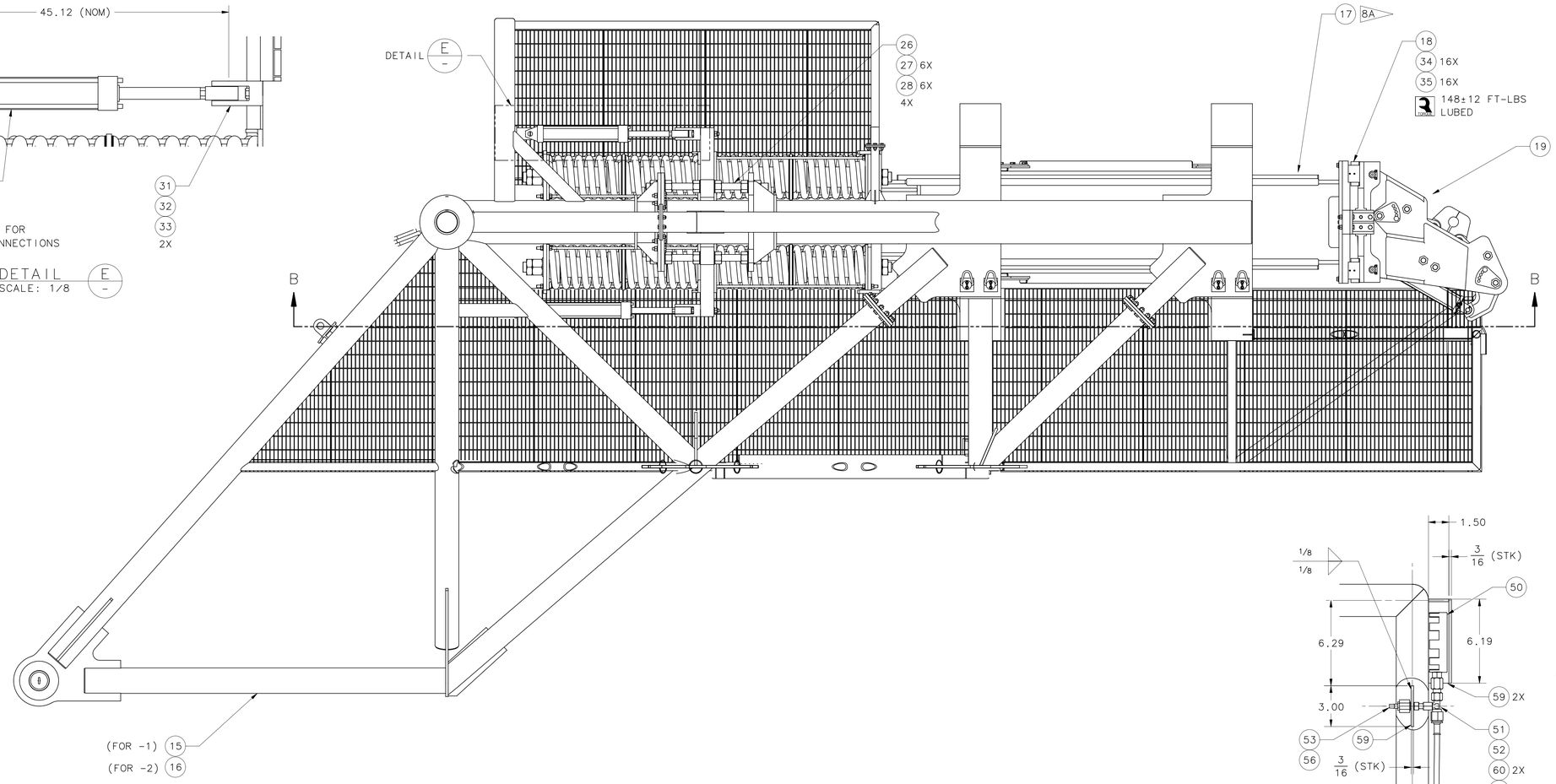

DETAIL A
SCALE: 1/4

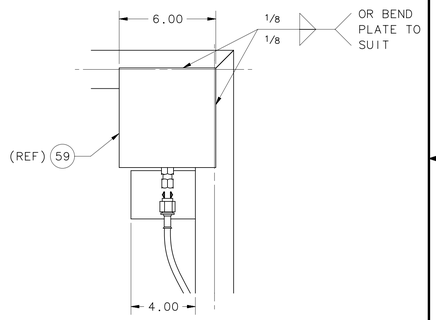

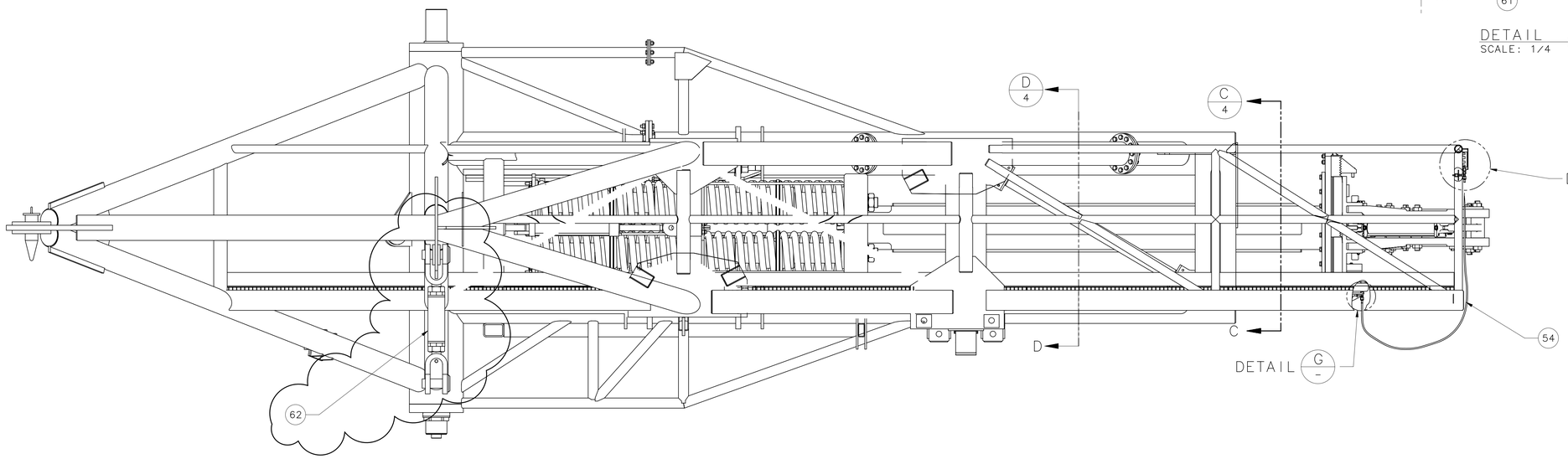

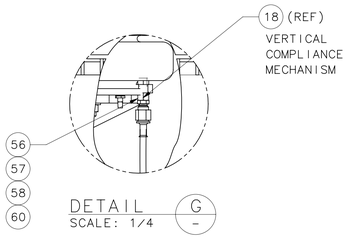

DETAIL G
SCALE: 1/4

1 SOUTH Y-DAMPER & SWING ARM ASSEMBLY-1 (SHOWN)
SCALE: 1/16

2 NORTH Y-DAMPER & SWING ARM ASSEMBLY-2 (OPPOSITE)
SCALE: 1/16

SIZE	CAGE CODE	DWG NO.	REV
F	22264	95K01172	A
SCALE NOTED		UNIT WEIGHT	SHEET 3 OF

DWG NO 95K01172 SHEET 3 REV A

KSC FORM 21-9 NS(REV 9/00)

CAD: LOCKED

NOTICE-WHEN GOVERNMENT DRAWINGS, SPECIFICATIONS, OR OTHER DATA ARE USED FOR ANY PURPOSE OTHER THAN IN CONNECTION WITH A DEFINITELY RELATED GOVERNMENT PROCUREMENT OPERATION, THE UNITED STATES GOVERNMENT THEREBY INCURS NO RESPONSIBILITY NOR ANY OBLIGATION WHATSOEVER, AND THE FACT THAT THE GOVERNMENT MAY HAVE FORMULATED, FURNISHED, OR IN ANY WAY SUPPLIED THE SAID DRAWINGS, SPECIFICATIONS OR ANY OTHER DATA IS NOT TO BE REGARDED BY IMPLICATION OR OTHERWISE IN ANY MANNER LICENSING THE HOLDER OR ANY OTHER PERSON OR CORPORATION, OR CONVEYING ANY RIGHTS OR PERMISSION TO MANUFACTURE, USE, OR SELL ANY PATENTED INVENTION THAT IN ANY WAY BE RELATED THERETO.

REVISION HISTORY					
PART NO.	ZONE	REV	DESCRIPTION	DATE	APPROVAL

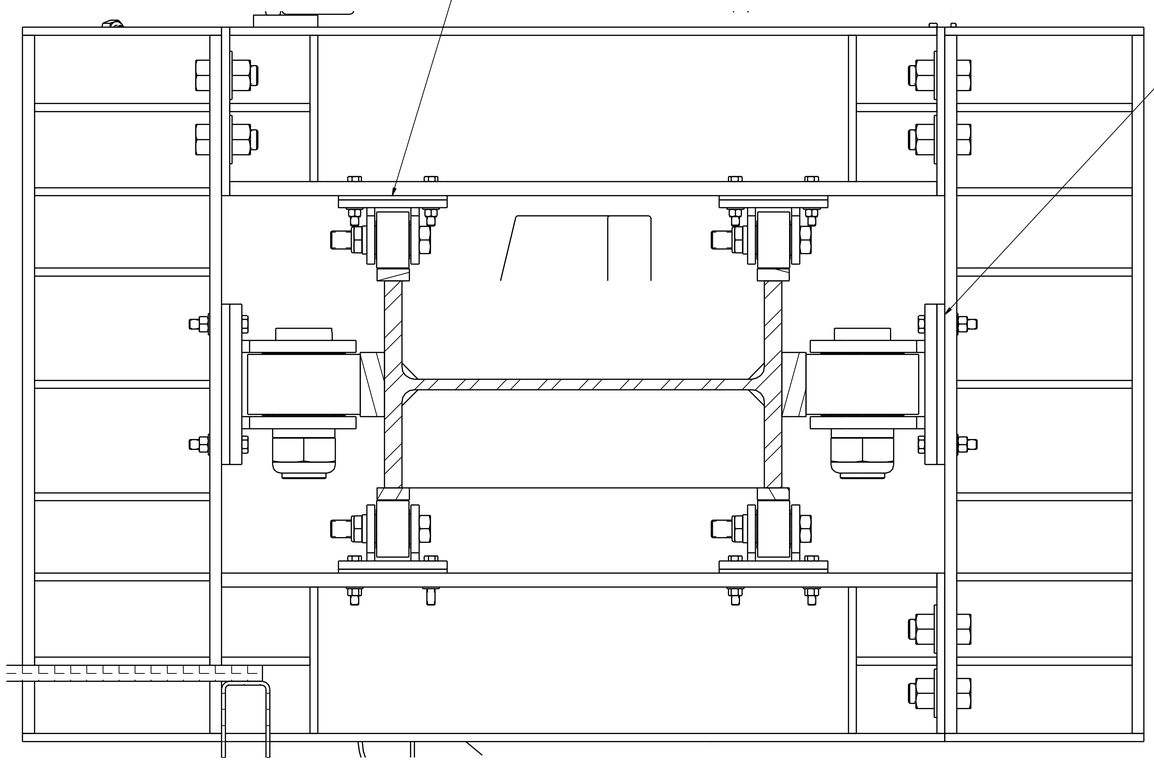

SECTION C/3 SCALE: 1/4 (SHOWN)

SECTION D/3 SCALE: 1/4 (SIMILAR)

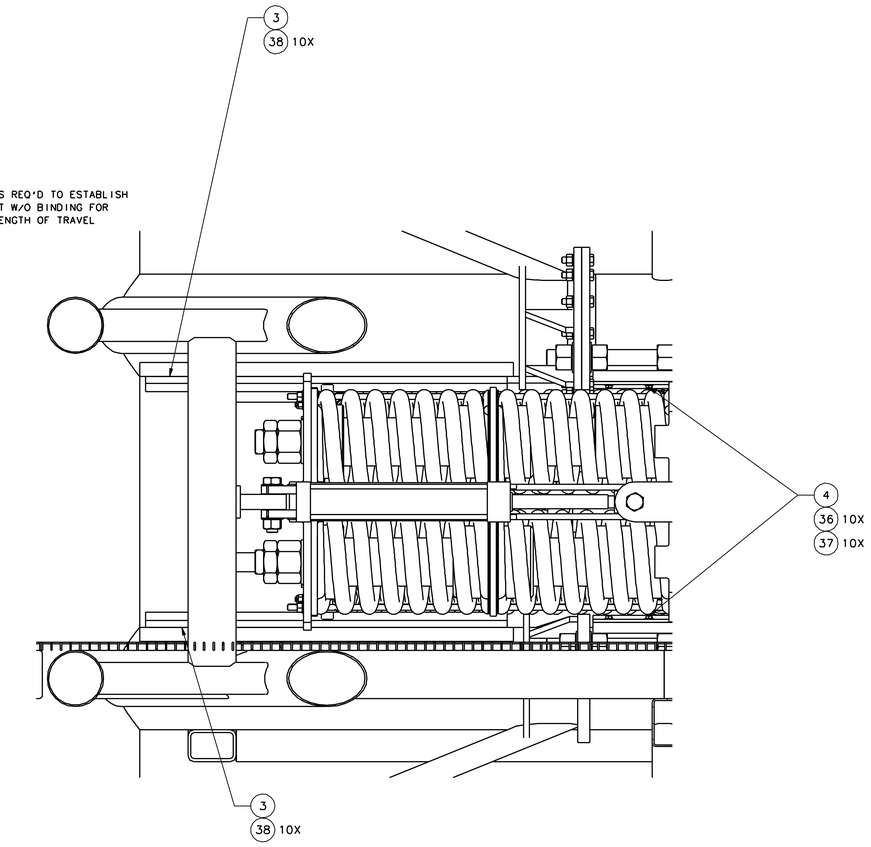

SECTION B/3 SCALE: 1/8

SIZE	CAGE CODE	DWG NO	REV
F	22264	95K01172	
SCALE NOTED		UNIT WEIGHT	SHEET 4 OF

DWG NO 95K01172 SHEET 4 REV

RSC FORM 21-9 WS(REV 9/00)

CAD CHECKED

NOTICE-WHEN GOVERNMENT DRAWINGS, SPECIFICATIONS, OR OTHER DATA ARE USED FOR ANY PURPOSE OTHER THAN IN CONNECTION WITH A DEFINITELY RELATED GOVERNMENT PROCUREMENT OPERATION, THE UNITED STATES GOVERNMENT THEREBY INCURS NO RESPONSIBILITY NOR ANY OBLIGATION WHATSOEVER; AND THE FACT THAT THE GOVERNMENT MAY HAVE FORMULATED, FURNISHED, OR IN ANY WAY SUPPLIED THE SAID DRAWINGS, SPECIFICATIONS OR ANY OTHER DATA IS NOT TO BE REGARDED BY IMPLICATION OR OTHERWISE IN ANY MANNER LICENSING THE HOLDER OR ANY OTHER PERSON OR CORPORATION, OR CONVEYING ANY RIGHTS OR PERMISSION TO MANUFACTURE, USE, OR SELL ANY PATENTED INVENTION THAT IN ANY WAY BE RELATED THERETO.

REVISION HISTORY

PART NO.	ZONE	REV	DESCRIPTION	DATE	APPROVAL
		A	REVISED SH 1-4, 8-12, 14-18 & 22 REVISED & REDRAWN SH 5,6,7,19,20,21,23,24 &25 ADDED SH 22A 1.THIS SH REVISED TO REFLECT REV A CHANGES	2008/11/14	S KUGELMANN

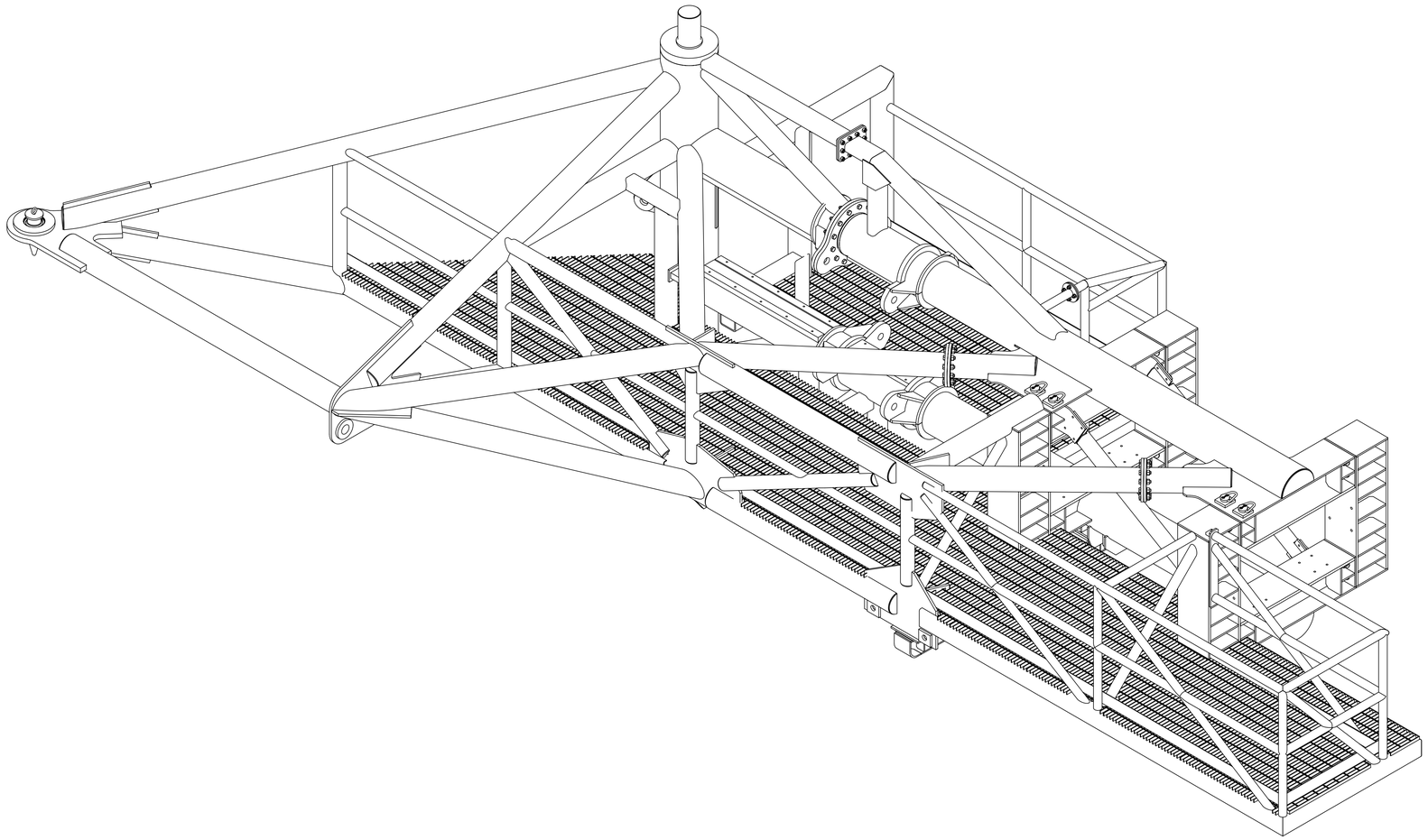

SWING ARM ASSY ISO

CAD MAINTAINED. CHANGES SHALL BE INCORPORATED ONLY BY THE DESIGN ACTIVITY

SOFTWARE: NX 5/TEAMCENTER
FILENAME: 052035_dwg
MATERIAL
HEAT TREATMENT
FINAL PROTECTIVE FINISH

95K01172 | ARES I-X
NEXT ASSY | USED ON
APPLICATION

UNLESS OTHERWISE SPECIFIED DIMENSIONS ARE IN INCHES. INTERPRET DIMENSIONS AND TOLERANCES PER ASME Y14.5M-1994. TOLERANCES ON:
FRACTIONS ±1/16 | DECIMAL .X±.1 .XX±.03 .XXX±.010 | ANGLES ±.5°

THIRD ANGLE PROJECTION

ORIGINAL DATE OF DRAWING (YY/MM/DD) 2008/08/08
DRAFTER S. MOYNIHAN | CHECKER G. HOPKINS
ENGINEER L. MILLER | CHECKER
ENGINEER | STRESS Z. JAKSETIC
ENGINEER
SUBMITTED
APPROVED S. KUGELMANN
MANAGER USA 15145

JOHN F. KENNEDY SPACE CENTER, NASA
KENNEDY SPACE CENTER, FLORIDA

ARES I-X VEHICLE
STABILIZATION SYSTEM
SWING ARM ASSEMBLY

SIZE F | CAGE CODE 22264 | DWG NO. 95K01173 | REV A
SCALE NOTED | UNIT WEIGHT ——— | SHEET 1 OF 25

DWG NO 95K01173 SHEET 1 REV A

KSC FORM 21-9 NS(REV 9/00)

CAD CHECKED

NOTICE-WHEN GOVERNMENT DRAWINGS, SPECIFICATIONS, OR OTHER DATA ARE USED FOR ANY PURPOSE OTHER THAN IN CONNECTION WITH A DEFINITELY RELATED GOVERNMENT PROCUREMENT OPERATION, THE UNITED STATES GOVERNMENT THEREBY INCURS NO RESPONSIBILITY NOR ANY OBLIGATION WHATSOEVER, AND THE FACT THAT THE GOVERNMENT MAY HAVE FORMULATED, FURNISHED, OR IN ANY WAY SUPPLIED THE SAID DRAWINGS, SPECIFICATIONS OR ANY OTHER DATA IS NOT TO BE REGARDED BY IMPLICATION OR OTHERWISE IN ANY MANNER LICENSING THE HOLDER OR ANY OTHER PERSON OR CORPORATION, OR CONVEYING ANY RIGHTS OR PERMISSION TO MANUFACTURE, USE, OR SELL ANY PATENTED INVENTION THAT IN ANY WAY BE RELATED THERETO

REVISION HISTORY

PART NO.	ZONE	REV	DESCRIPTION	DATE	APPROVAL
		A	THIS SH REVISED ITEM 52, GR 42 WAS GR 50 ITEM 59, 6 X 4 WAS 6 X 3 ADDED ITEM 67 CHANGED FLAG NOTE 2E FROM 2D	2008/11/14	S KUGELMANN

PARTS LIST

-64	-63	-62	-15	-14	-13	-12	-11	-10	-9	-8	-7	-6	-5	-4	-3	-2	-1	ZONE	FIND NO OR ITEM NO	MFR CODE	PART OR STOCK NO.	DESCRIPTION	STOCK SIZE	MATERIAL SPEC.	FINISH CODE	UNIT WT
														A/R	A/R				67			PLATE	5/8	ASTM A572 GR 50		
		1																	66			WIDE FLANGE	W6 X 25 X 6'-7"	ASTM A992/A572 GR 50		
A/R														A/R	A/R				65			PLATE	2-1/4	ASTM A572 GR 50		
-														1	1				64		95K01173-64	MOUNT AND TIEDOWN BRACKET		ASTM A572 GR 50		
	-													2	2				63		95K01173-63	SKID MOUNT BRACKET		ASTM A572 GR 50		
		-														1	1		62		95K01173-62	ROTATION ARM SKID		ASTM A992/A572 GR 50		
														A/R	A/R				61			HSS, SQUARE TUBE	4 X 3/8	ASTM A500		
														A/R	A/R				60			HSS, RECTANGULAR TUBE	4 X 2 X 1/4	ASTM A500		
														A/R	A/R				59			HSS, RECTANGULAR TUBE	6 X 4 X 3/8	ASTM A500		
														A/R	A/R				58			HSS, SQUARE TUBE	4 X 1/4	ASTM A500		
												A/R	A/R	A/R	A/R				57			HSS, RECTANGULAR TUBE	6 X 3 X 1/2	ASTM A500		
										A/R									56			HSS, RECTANGULAR TUBE	4 X 3 X 1/4	ASTM A500		
														A/R	A/R				55			HSS, RECTANGULAR TUBE	6 X 3 X 1/4	ASTM A500		
											A/R			A/R	A/R				54			WIDE FLANGE	W12 X 79	ASTM A992/A572 GR 50		
												A/R	A/R	A/R	A/R				53			WIDE FLANGE	WT10.5 X 55.5	ASTM A992/A572 GR 50		
														A/R	A/R				52			PLATE	5	ASTM A572 GR 42		
					A/R									A/R	A/R				51			PLATE	3	ASTM A572 GR 50		
						A/R													50			PLATE	2	ASTM A572 GR 50		
												A/R	A/R						49			PLATE	1-1/2	ASTM A572 GR 50		
												A/R	A/R	A/R	A/R				48			PLATE	1-3/8	ASTM A572 GR 50		
														A/R	A/R				47			PLATE	1-1/8	ASTM A572 GR 50		
		A/R										A/R	A/R	A/R	A/R				46			PLATE	1	ASTM A572 GR 50		
		A/R										A/R	A/R	A/R	A/R				45			PLATE	3/4	ASTM A572 GR 50		
A/R	A/R	A/R		A/R		A/R				A/R	A/R	A/R	A/R	A/R	A/R				44			PLATE	1/2	ASTM A572 GR 50		
		A/R										A/R	A/R	A/R	A/R				43			PLATE	3/8	ASTM A572 GR 50		
												A/R	A/R	A/R	A/R				42			PLATE	1/4	ASTM A572 GR 50		
												A/R	A/R						41			PLATE	1/8	ASTM A572 GR 50		

ASSY DASH NO. AND NO. REQ'D

PARTS LIST

-64	-63	-62	-15	-14	-13	-12	-11	-10	-9	-8	-7	-6	-5	-4	-3	-2	-1	ZONE	FIND NO OR ITEM NO	MFR CODE	PART OR STOCK NO.	DESCRIPTION	STOCK SIZE	MATERIAL SPEC.	FINISH CODE	UNIT WT
											A/R	A/R	A/R	A/R					40			PIPE, SCHEDULE 80	Ø 2	ASTM A53		
													A/R	A/R					39			HSS ROUND TUBE	Ø 16 X 1/2	ASTM A500		
													A/R	A/R					38			HSS ROUND TUBE	Ø 4 X 1/4	ASTM A500		
													A/R	A/R					37			HSS ROUND TUBE	Ø 7 X 1/4	ASTM A500		
											A/R	A/R	A/R	A/R					36			HSS ROUND TUBE	Ø 7 X 3/8	ASTM A500		
													A/R	A/R					35			HSS ROUND TUBE	Ø 7-1/2 X 1/2	ASTM A500		
											A/R	A/R	A/R	A/R					34			HSS ROUND TUBE	Ø 12-3/4 X 3/8	ASTM A500		
													A/R	A/R					33	B	GW-100	BAR GRATING		STEEL		
															24	24			32			WASHER, HARDENED	Ø 1-1/4	ASTM F436 GALV		
															49	49			31			WASHER, HARDENED	Ø 3/4	ASTM F436 GALV		
															10	10			30			WASHER, HARDENED	Ø 5/8	ASTM F436 GALV		
															20	20			29			WASHER, HARDENED	Ø 1/2	ASTM F436 GALV		
															24	24			28			NUT, HEX, STRUCTURAL	1-1/4-7UNC-2B	A563 TYPE DH GALV		
															49	49			27			NUT, HEX, STRUCTURAL	3/4-10UNC-2B	A563 TYPE DH GALV		
															10	10			26			NUT, HEX, STRUCTURAL	5/8-11UNC-2B	A563 TYPE DH GALV		
															20	20			25			NUT, HEX, STRUCTURAL	1/2-13UNC-2B	A563 TYPE DH GALV		
															24	24			24			BOLT, HEX, STRUCTURAL	1-1/4-7UNC-2A X 3	ASTM A325 GALV		
															17	17			23			BOLT, HEX, STRUCTURAL	3/4-10UNC-2A X 3-1/2	ASTM A325 GALV		
															32	32			22			BOLT, HEX, STRUCTURAL	3/4-10UNC-2A X 2-3/4	ASTM A325 GALV		
															10	10			21			BOLT, HEX, STRUCTURAL	5/8-11UNC-2A X 2	ASTM A325 GALV		
															16	16			20			BOLT, HEX, STRUCTURAL	1/2-13UNC-2A X 2	ASTM A325 GALV		
															4	4			19			BOLT, HEX, STRUCTURAL	1/2-13UNC-2A X 1-3/4	ASTM A325 GALV		
															1	1			18	A	3014T254	BOLT, SHOULDER, EYE	1/2-13UNC-2A	ZINC PLATE		
															1	1			17	C	WH587	RETAINING RING	Ø 5.875	316 SST		
															1	1			16	D	B60-L	BEARING, PLAIN, SPHERICAL	3.75 BORE			
				-											1	1			15		95K01173-15	PIN	5.00 DIA X 14.00	4140 STEEL		
					-									1	1				14		95K01173-14	DEPLOY CYLINDER LUG MOUNT				
						-								1	1				13		95K01173-13	DEPLOY CYLINDER LUG				
							-							2	2				12		95K01173-12	ADJUST CYLINDER LUG				
								-								1	1		11		95K01173-11	SET SCREW		2E		
									-							1	1		10		95K01173-10	UPPER BEARING SHAFT	7.25 DIA X 26.00	4140 STEEL		
										-						1	1		9		95K01173-9	LOWER BEARING SHAFT	8.00 DIA X 26.66	4140 STEEL		
											-					2	2		8		95K01173-8	DIAGONAL BRACE				
												-				2	2		7		95K01173-7	ROLLER MOUNT BEAM				
													-			1			6		95K01173-6	NORTH REMOVABLE WELDMENT				
														-			1		5		95K01173-5	SOUTH REMOVABLE WELDMENT				
															-	1			4		95K01173-4	NORTH SWING ARM WELDMENT				
																-	1		3		95K01173-3	SOUTH SWING ARM WELDMENT				
																-			2		95K01173-2	NORTH SWING ARM ASSEMBLY				
																	-		1		95K01173-1	SOUTH SWING ARM ASSEMBLY				

ASSY DASH NO. AND NO. REQ'D

SIZE	CAGE CODE	DWG NO	REV
F	22264	95K01173	A
SCALE NOTED		UNIT WEIGHT ____	SHEET 2 OF

DWG NO 95K01173 SHEET 2 REV A

NSC FORM 21-9 WS(REV 9/00)

CAD FILE LOCKED

NOTICE-WHEN GOVERNMENT DRAWINGS, SPECIFICATIONS, OR OTHER DATA ARE USED FOR ANY PURPOSE OTHER THAN IN CONNECTION WITH A DEFINITELY RELATED GOVERNMENT PROCUREMENT OPERATION, THE UNITED STATES GOVERNMENT THEREBY INCURS NO RESPONSIBILITY NOR ANY OBLIGATION WHATSOEVER; AND THE FACT THAT THE GOVERNMENT MAY HAVE FORMULATED, FURNISHED, OR IN ANY WAY SUPPLIED THE SAID DRAWINGS, SPECIFICATIONS OR ANY OTHER DATA IS NOT TO BE REGARDED BY IMPLICATION OR OTHERWISE IN ANY MANNER LICENSING THE HOLDER OR ANY OTHER PERSON OR CORPORATION, OR CONVEYING ANY RIGHTS OR PERMISSION TO MANUFACTURE, USE, OR SELL ANY PATENTED INVENTION THAT IN ANY WAY BE RELATED THERETO.

REVISION HISTORY					
PART NO.	ZONE	REV	DESCRIPTION	DATE	APPROVAL

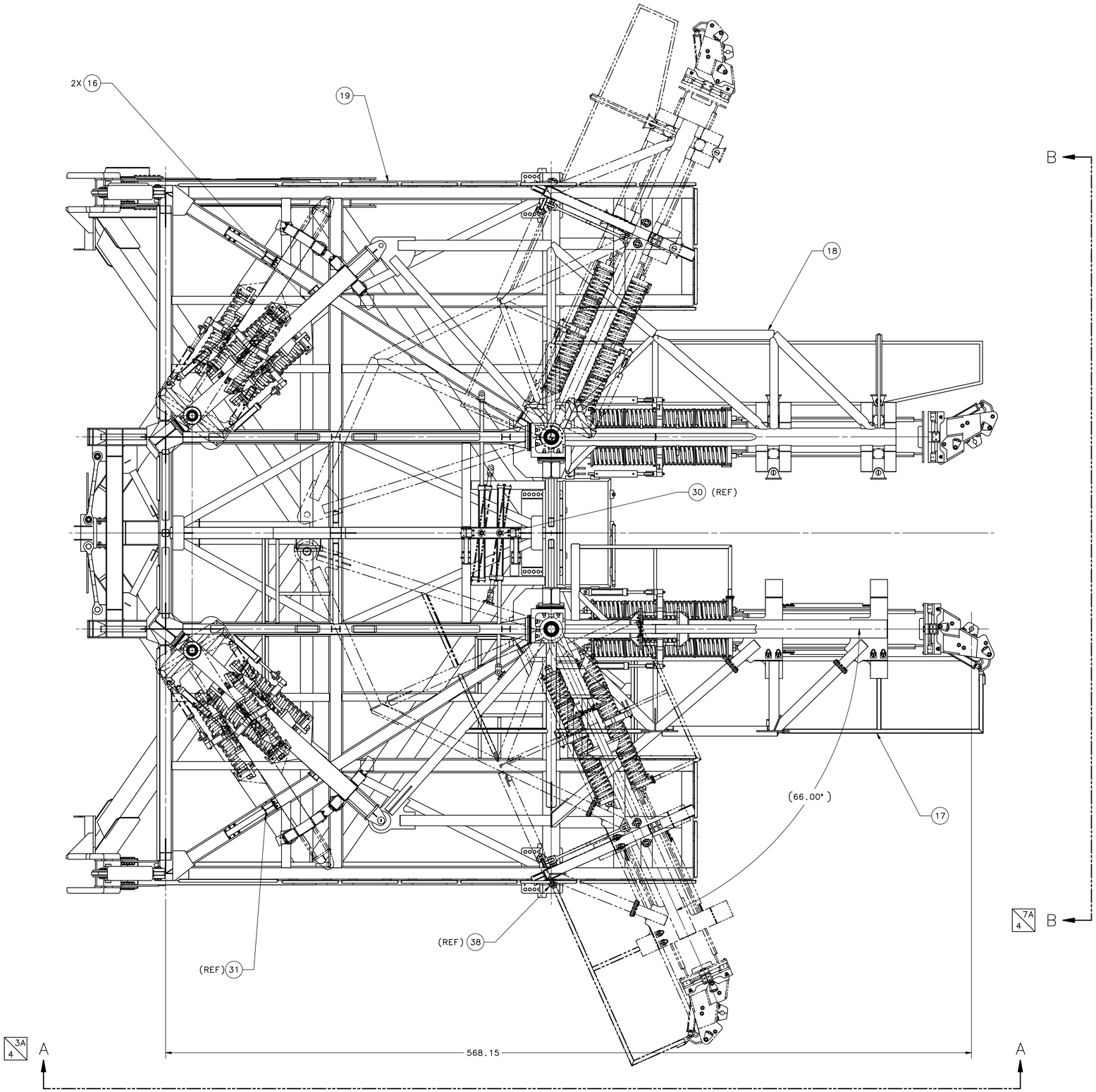

1 HINGE & DAMPER INST ASSY-1

PLAN VIEW
SCALE: 1/32

SIZE	CAGE CODE	DWG NO.	REV
F	22264	95K01184	-
SCALE NOTED		UNIT WEIGHT	SHEET 3 OF

DWG NO 95K01184 SHEET 3 REV -

KSC FORM 21-9 NS(REV 9/00)

CAD SET LOCKED